Kawasaki

VULCAN 1700 NOMAD

VN1700 CLASSIC TOURER



Motorcycle Service Manual

Downloaded from www.vulcanriders-sweden.org

Downloaded from www.vulcanriders-sweden.org

Quick Reference Guide

General Information	1
Periodic Maintenance	2
Fuel System (DFI)	3
Cooling System	4
Engine Top End	5
Clutch	6
Engine Lubrication System	7
Engine Removal/Installation	8
Crankshaft/Transmission	9
Wheels/Tires	10
Final Drive	11
Brakes	12
Suspension	13
Steering	14
Frame	15
Electrical System	16
Appendix	17

This quick reference guide will assist you in locating a desired topic or procedure.

- Bend the pages back to match the black tab of the desired chapter number with the black tab on the edge at each table of contents page.
- Refer to the sectional table of contents for the exact pages to locate the specific topic required.

Downloaded from www.vulcanriders-sweden.org

Downloaded from www.vulcanriders-sweden.org

Kawasaki

VULCAN 1700 NOMAD
VN1700 CLASSIC TOURER

Motorcycle Service Manual

All rights reserved. No parts of this publication may be reproduced, stored in a retrieval system, or transmitted in any form or by any means, electronic mechanical photocopying, recording or otherwise, without the prior written permission of Quality Assurance Division/Consumer Products & Machinery Company/Kawasaki Heavy Industries, Ltd., Japan.

No liability can be accepted for any inaccuracies or omissions in this publication, although every possible care has been taken to make it as complete and accurate as possible.

The right is reserved to make changes at any time without prior notice and without incurring an obligation to make such changes to products manufactured previously. See your Motorcycle dealer for the latest information on product improvements incorporated after this publication.

All information contained in this publication is based on the latest product information available at the time of publication. Illustrations and photographs in this publication are intended for reference use only and may not depict actual model component parts.

© 2009 Kawasaki Heavy Industries, Ltd. First Edition (1) : Jan. 30, 2009 (M)

Downloaded from www.vulcanriders-sweden.org

LIST OF ABBREVIATIONS

A	ampere(s)	lb	pound(s)
ABDC	after bottom dead center	m	meter(s)
AC	alternating current	min	minute(s)
ATDC	after top dead center	N	newton(s)
BBDC	before bottom dead center	Pa	pascal(s)
BDC	bottom dead center	PS	horsepower
BTDC	before top dead center	psi	pound(s) per square inch
°C	degree(s) Celsius	r	revolution
DC	direct current	rpm	revolution(s) per minute
F	farad(s)	TDC	top dead center
°F	degree(s) Fahrenheit	TIR	total indicator reading
ft	foot, feet	V	volt(s)
g	gram(s)	W	watt(s)
h	hour(s)	Ω	ohm(s)
L	liter(s)		

COUNTRY AND AREA CODES

AT	Austria	EUR	Europe
AU	Australia	GB	United Kingdom
CA	Canada	SEA	Southeast Asia
CAL	California	US	United States
CH	Switzerland	WVTA (FULL H)	WVTA Model with Honeycomb Catalytic Converter (Full Power)
DE	Germany	GB WVTA (FULL H)	WVTA Model with Honeycomb Catalytic Converter (Left Side Traffic Full Power)

Downloaded from www.vulcanriders-sweden.org

EMISSION CONTROL INFORMATION

To protect the environment in which we all live, Kawasaki has incorporated crankcase emission (1) and exhaust emission (2) control systems in compliance with applicable regulations of the United States Environmental Protection Agency and California Air Resources Board. Additionally, Kawasaki has incorporated an evaporative emission control system (3) in compliance with applicable regulations of the California Air Resources Board on vehicles sold in California only.

1. Crankcase Emission Control System

This system eliminates the release of crankcase vapors into the atmosphere. Instead, the vapors are routed through an oil separator to the inlet side of the engine. While the engine is operating, the vapors are drawn into combustion chamber, where they are burned along with the fuel and air supplied by the fuel injection system.

2. Exhaust Emission Control System

This system reduces the amount of pollutants discharged into the atmosphere by the exhaust of this motorcycle. The fuel, ignition, and exhaust systems of this motorcycle have been carefully designed and constructed to ensure an efficient engine with low exhaust pollutant levels.

The exhaust system of this model motorcycle manufactured primarily for sale in California includes a catalytic converter system.

3. Evaporative Emission Control System

Vapors caused by fuel evaporation in the fuel system are not vented into the atmosphere. Instead, fuel vapors are routed into the running engine to be burned, or stored in a canister when the engine is stopped. Liquid fuel is caught by a vapor separator and returned to the fuel tank.

The Clean Air Act, which is the Federal law covering motor vehicle pollution, contains what is commonly referred to as the Act's "tampering provisions".

"Sec. 203(a) The following acts and the causing thereof are prohibited...

(3)(A) for any person to remove or render inoperative any device or element of design installed on or in a motor vehicle or motor vehicle engine in compliance with regulations under this title prior to its sale and delivery to the ultimate purchaser, or for any manufacturer or dealer knowingly to remove or render inoperative any such device or element of design after such sale and delivery to the ultimate purchaser.

(3)(B) for any person engaged in the business of repairing, servicing, selling, leasing, or trading motor vehicles or motor vehicle engines, or who operates a fleet of motor vehicles knowingly to remove or render inoperative any device or element of design installed on or in a motor vehicle or motor vehicle engine in compliance with regulations under this title following its sale and delivery to the ultimate purchaser..."

NOTE

○ *The phrase "remove or render inoperative any device or element of design" has been generally interpreted as follows.*

1. *Tampering does not include the temporary removal or rendering inoperative of devices or elements of design in order to perform maintenance.*
2. *Tampering could include.*
   a. *Maladjustment of vehicle components such that the emission standards are exceeded.*
   b. *Use of replacement parts or accessories which adversely affect the performance or durability of the motorcycle.*
   c. *Addition of components or accessories that result in the vehicle exceeding the standards.*
   d. *Permanently removing, disconnecting, or rendering inoperative any component or element of design of the emission control systems.*

WE RECOMMEND THAT ALL DEALERS OBSERVE THESE PROVISIONS OF FEDERAL LAW, THE VIOLATION OF WHICH IS PUNISHABLE BY CIVIL PENALTIES NOT EXCEEDING $10 000 PER VIOLATION.

Downloaded from www.vulcanriders-sweden.org

TAMPERING WITH NOISE CONTROL SYSTEM PROHIBITED

Federal law prohibits the following acts or the causing thereof. (1) The removal or rendering inoperative by any person other than for purposes of maintenance, repair, or replacement, of any device or element of design incorporated into any new vehicle for the purpose of noise control prior to its sale or delivery to the ultimate purchaser or while it is in use, or (2) the use of the vehicle after such device or element of design has been removed or rendered inoperative by any person.

Among those acts presumed to constitute tampering are the acts listed below.

- Replacement of the original exhaust system or muffler with a component not in compliance with Federal regulations.
- Removal of the muffler(s) or any internal portion of the muffler(s).
- Removal of the air box or air box cover.
- Modifications to the muffler(s) or air inlet system by cutting, drilling, or other means if such modifications result in increased noise levels.

Downloaded from www.vulcanriders-sweden.org

Foreword

This manual is designed primarily for use by trained mechanics in a properly equipped shop. However, it contains enough detail and basic information to make it useful to the owner who desires to perform his own basic maintenance and repair work. A basic knowledge of mechanics, the proper use of tools, and workshop procedures must be understood in order to carry out maintenance and repair satisfactorily. Whenever the owner has insufficient experience or doubts his ability to do the work, all adjustments, maintenance, and repair should be carried out only by qualified mechanics.

In order to perform the work efficiently and to avoid costly mistakes, read the text, thoroughly familiarize yourself with the procedures before starting work, and then do the work carefully in a clean area. Whenever special tools or equipment are specified, do not use makeshift tools or equipment. Precision measurements can only be made if the proper instruments are used, and the use of substitute tools may adversely affect safe operation.

For the duration of the warranty period, we recommend that all repairs and scheduled maintenance be performed in accordance with this service manual. Any owner maintenance or repair procedure not performed in accordance with this manual may void the warranty.

To get the longest life out of your vehicle.

- Follow the Periodic Maintenance Chart in the Service Manual.
- Be alert for problems and non-scheduled maintenance.
- Use proper tools and genuine Kawasaki Motorcycle parts. Special tools, gauges, and testers that are necessary when servicing Kawasaki motorcycles are introduced by the Service Manual. Genuine parts provided as spare parts are listed in the Parts Catalog.
- Follow the procedures in this manual carefully. Don't take shortcuts.
- Remember to keep complete records of maintenance and repair with dates and any new parts installed.

How to Use This Manual

In this manual, the product is divided into its major systems and these systems make up the manual's chapters. The Quick Reference Guide shows you all of the product's system and assists in locating their chapters. Each chapter in turn has its own comprehensive Table of Contents.

For example, if you want ignition coil information, use the Quick Reference Guide to locate the Electrical System chapter. Then, use the Table of Contents on the first page of the chapter to find the Ignition Coil section.

Whenever you see these WARNING and CAUTION symbols, heed their instructions! Always follow safe operating and maintenance practices.

⚠ WARNING

This warning symbol identifies special instructions or procedures which, if not correctly followed, could result in personal injury, or loss of life.

CAUTION

This caution symbol identifies special instructions or procedures which, if not strictly observed, could result in damage to or destruction of equipment.

This manual contains four more symbols (in addition to WARNING and CAUTION) which will help you distinguish different types of information.

NOTE

○*This note symbol indicates points of particular interest for more efficient and convenient operation.*

- ● Indicates a procedural step or work to be done.
- ○ Indicates a procedural sub-step or how to do the work of the procedural step it follows. It also precedes the text of a NOTE.
- ★ Indicates a conditional step or what action to take based on the results of the test or inspection in the procedural step or sub-step it follows.

In most chapters an exploded view illustration of the system components follows the Table of Contents. In these illustrations you will find the instructions indicating which parts require specified tightening torque, oil, grease or a locking agent during assembly.

Downloaded from www.vulcanriders-sweden.org

Downloaded from www.vulcanriders-sweden.org

General Information

Table of Contents

Before Servicing 1-2
Model Identification..... 1-7
General Specifications..... 1-9
Electrical Throttle Valve (ETV) System..... 1-12
Unit Conversion Table 1-15

Downloaded from www.vulcanriders-sweden.org

Before Servicing

Before starting to perform an inspection service or carry out a disassembly and reassembly operation on a motorcycle, read the precautions given below. To facilitate actual operations, notes, illustrations, photographs, cautions, and detailed descriptions have been included in each chapter wherever necessary. This section explains the items that require particular attention during the removal and reinstallation or disassembly and reassembly of general parts.

Especially note the following.

Battery Ground

Before completing any service on the motorcycle, disconnect the battery cables from the battery to prevent the engine from accidentally turning over. Disconnect the ground cable (–) first and then the positive (+). When completed with the service, first connect the positive (+) cable to the positive (+) terminal of the battery then the negative (–) cable to the negative terminal.

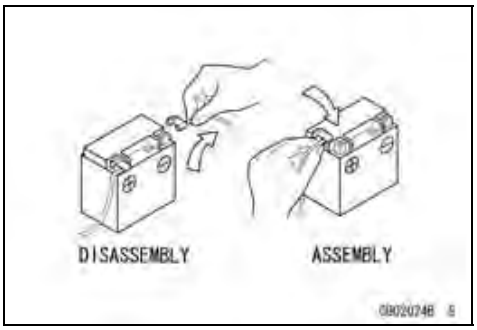

Edges of Parts

Lift large or heavy parts wearing gloves to prevent injury from possible sharp edges on the parts.

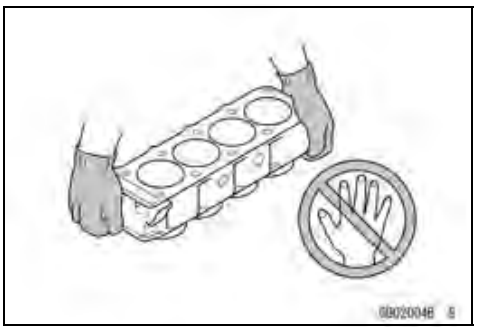

Solvent

Use a high-flash point solvent when cleaning parts. High -flash point solvent should be used according to directions of the solvent manufacturer.

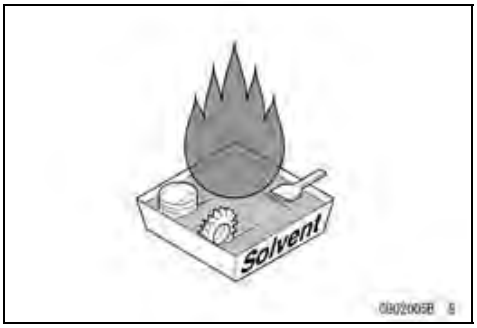

Cleaning Vehicle before Disassembly

Clean the vehicle thoroughly before disassembly. Dirt or other foreign materials entering into sealed areas during vehicle disassembly can cause excessive wear and decrease performance of the vehicle.

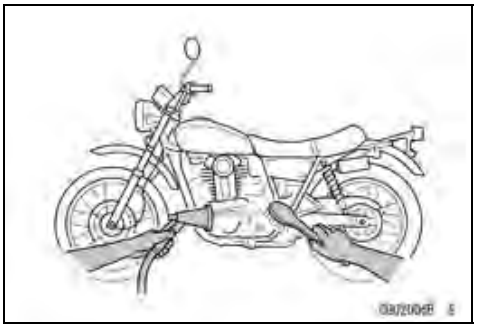

Downloaded from www.vulcanriders-sweden.org

Before Servicing

Arrangement and Cleaning of Removed Parts

Disassembled parts are easy to confuse. Arrange the parts according to the order the parts were disassembled and clean the parts in order prior to assembly.

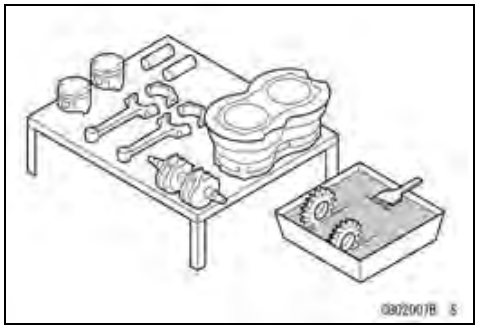

Storage of Removed Parts

After all the parts including subassembly parts have been cleaned, store the parts in a clean area. Put a clean cloth or plastic sheet over the parts to protect from any foreign materials that may collect before re-assembly.

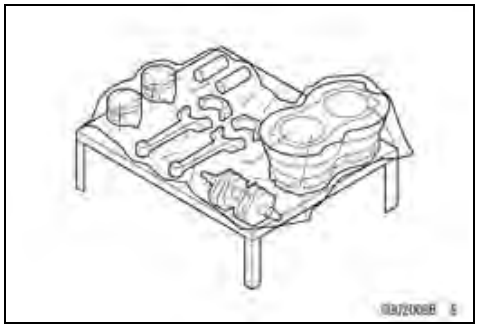

Inspection

Reuse of worn or damaged parts may lead to serious accident. Visually inspect removed parts for corrosion, discoloration, or other damage. Refer to the appropriate sections of this manual for service limits on individual parts. Replace the parts if any damage has been found or if the part is beyond its service limit.

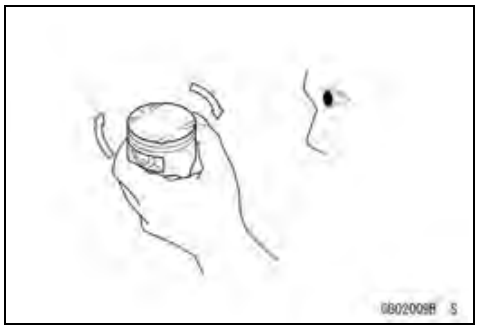

Replacement Parts

Replacement parts must be KAWASAKI genuine or recommended by KAWASAKI. Gaskets, O-rings, oil seals, grease seals, circlips, cotter pins or locknuts must be replaced with new ones whenever disassembled.

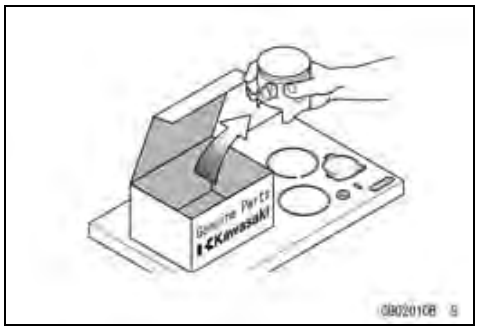

Assembly Order

In most cases assembly order is the reverse of disassembly, however, if assembly order is provided in this Service Manual, follow the procedures given.

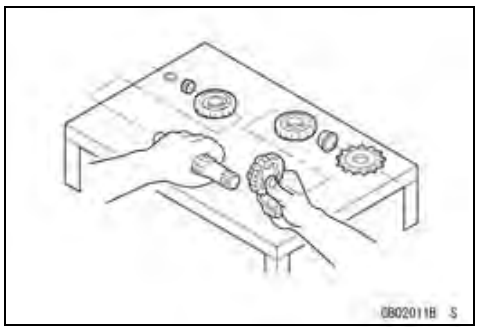

Downloaded from www.vulcanriders-sweden.org

Before Servicing

Tightening Sequence

Generally, when installing a part with several bolts, nuts, or screws, start them all in their holes and tighten them to a snug fit. Then tighten them according to the specified sequence to prevent case warpage or deformation which can lead to malfunction. Conversely when loosening the bolts, nuts, or screws, first loosen all of them by about a quarter turn and then remove them. If the specified tightening sequence is not indicated, tighten the fasteners alternating diagonally.

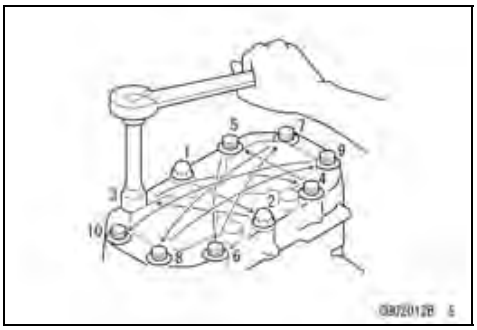

Tightening Torque

Incorrect torque applied to a bolt, nut, or screw may lead to serious damage. Tighten fasteners to the specified torque using a good quality torque wrench.

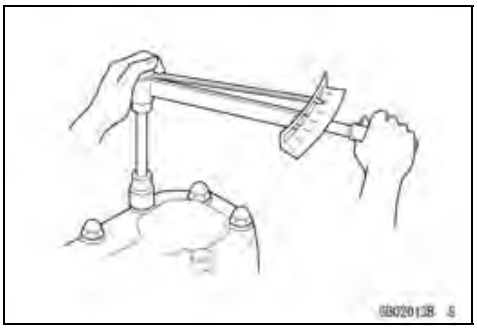

Force

Use common sense during disassembly and assembly, excessive force can cause expensive or hard to repair damage. When necessary, remove screws that have a non -permanent locking agent applied using an impact driver. Use a plastic-faced mallet whenever tapping is necessary.

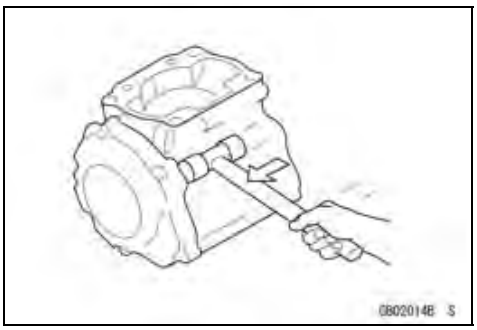

Gasket, O-ring

Hardening, shrinkage, or damage of both gaskets and O-rings after disassembly can reduce sealing performance. Remove old gaskets and clean the sealing surfaces thoroughly so that no gasket material or other material remains. Install the new gaskets and replace the used O-rings when re-assembling.

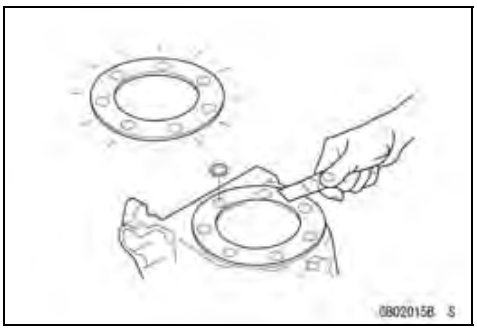

Liquid Gasket, Non-permanent Locking Agent

For applications that require Liquid Gasket or a Non-permanent Locking Agent, clean the surfaces so that no oil residue remains before applying liquid gasket or non-permanent locking agent. Do not apply them excessively. Excessive application can clog oil passages and cause serious damage.

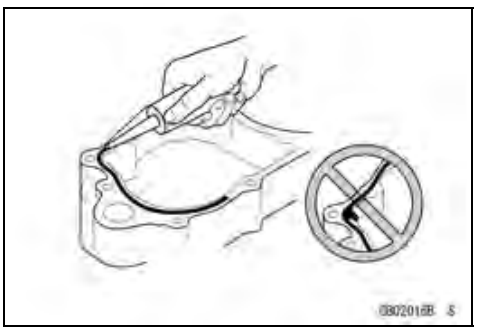

Downloaded from www.vulcanriders-sweden.org

Before Servicing

Press

For items such as bearings or oil seals that must be pressed into place, apply small amount of oil to the contact area. Be sure to maintain proper alignment and use smooth movements when installing.

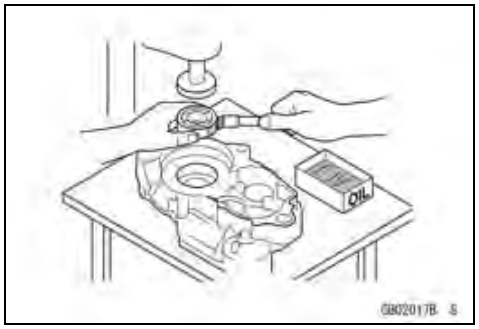

Ball Bearing and Needle Bearing

Do not remove pressed ball or needle unless removal is absolutely necessary. Replace with new ones whenever removed. Press bearings with the manufacturer and size marks facing out. Press the bearing into place by putting pressure on the correct bearing race as shown.

Pressing the incorrect race can cause pressure between the inner and outer race and result in bearing damage.

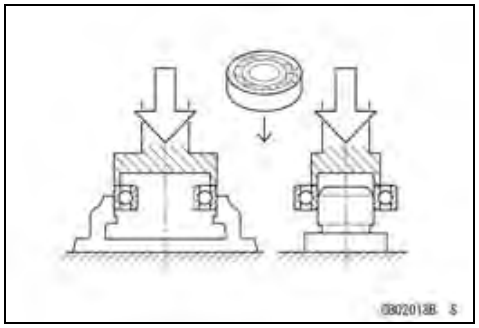

Oil Seal, Grease Seal

Do not remove pressed oil or grease seals unless removal is necessary. Replace with new ones whenever removed. Press new oil seals with manufacture and size marks facing out. Make sure the seal is aligned properly when installing.

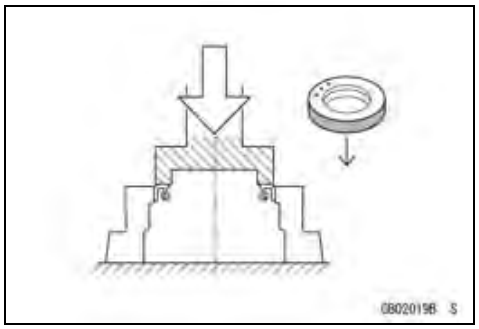

Apply specified grease to the lip of seal before installing the seal.

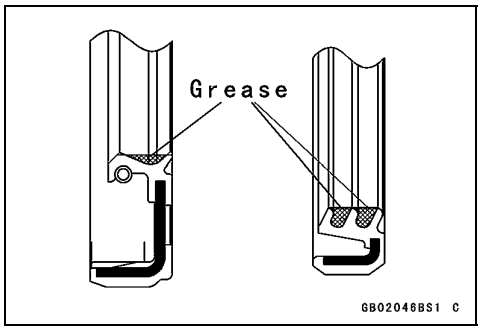

Circlips, Cotter Pins

Replace the circlips or cotter pins that were removed with new ones. Take care not to open the clip excessively when installing to prevent deformation.

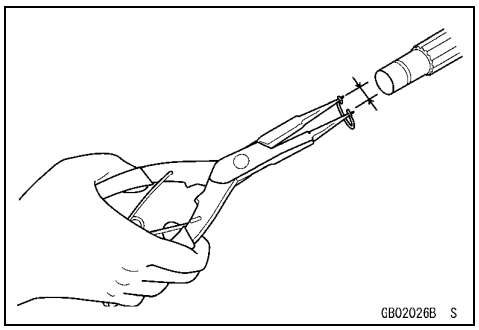

Downloaded from www.vulcanriders-sweden.org

Before Servicing

Lubrication

It is important to lubricate rotating or sliding parts during assembly to minimize wear during initial operation. Lubrication points are called out throughout this manual, apply the specific oil or grease as specified.



Direction of Engine Rotation

When rotating the crankshaft by hand, the free play amount of rotating direction will affect the adjustment. Rotate the crankshaft to positive direction (clockwise viewed from output side).

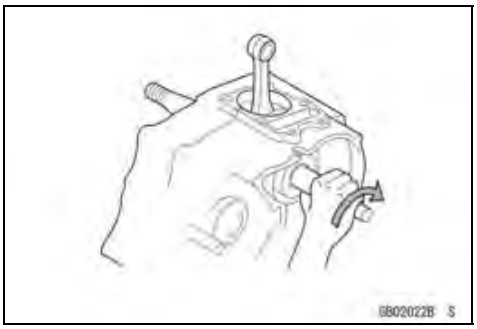

Electrical Leads

A two-color lead is identified first by the primary color and then the stripe color. Unless instructed otherwise, electrical leads must be connected to those of the same color.

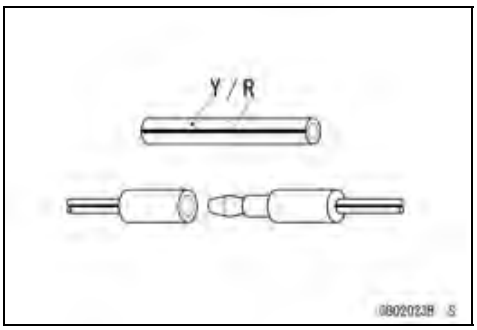

Instrument

Use a meter that has enough accuracy for an accurate measurement. Read the manufacture's instructions thoroughly before using the meter. Incorrect values may lead to improper adjustments.

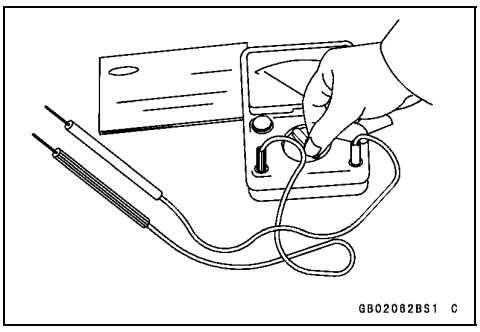

Downloaded from www.vulcanriders-sweden.org

Model Identification

VN1700C9F (US and CA Models) Left Side View



VN1700C9F (US and CA Models) Right Side View



Downloaded from www.vulcanriders-sweden.org

Model Identification

VN1700C9F (EUR Models) Left Side View



VN1700C9F (EUR Models) Right Side View



Frame Number



Engine Number



Downloaded from www.vulcanriders-sweden.org

General Specifications

Items	VN1700C9F
Dimensions	
Overall Length	2 500 mm (98.43 in.)
Overall Width	1 025 mm (40.35 in.), (AU) 995 mm (39.17 in.)
Overall Height	1 465 mm (57.68 in.)
Wheelbase	1 665 mm (65.55 in.)
Road Clearance	140 mm (5.51 in.)
Seat Height	730 mm (28.7 in.)
Curb Mass:	378 kg (833 lb)
Front	168 kg (370 lb)
Rear	210 kg (463 lb)
Fuel Tank Capacity	20 L (5.3 US gal)
Performance	
Minimum Turning Radius	3.3 m (10.8 ft)
Engine	
Type	4-stroke, SOHC, V2-cylinder
Cooling System	Liquid-cooled
Bore and Stroke	102 × 104 mm (4.02 × 4.09 in.)
Displacement	1700 cm³ (103.7 cu in.)
Compression Ratio	9.5:1
Maximum Horsepower	54 kW (73.4 PS) @5 000 r/min (rpm), (CA), (CAL), (US) – – –
Maximum Torque	136 N·m (13.9 kgf·m, 100.3 ft·lb) @2 750 r/min (rpm), (CA), (CAL), (US) – – –
Carburetion System	FI (Fuel Injection), MIKUNI EACW42 × 2
Starting System	Electric starter
Ignition System	Battery and coil (transistorized)
Timing Advance	Electronically advanced (IC igniter in ECU)
Ignition Timing	From 0° BTDC @ 950 r/min (rpm) to 32° BTDC @ 4 250 r/min (rpm)
Spark Plug	NGK ILZKAR7B11
Cylinder Numbering Method	Front to rear, 1-2
Firing Order	2-1
Valve Timing:	
Inlet:	
Open	30° (BTDC)
Close	50° (ABDC)
Duration	260°
Exhaust:	
Open	55° (BBDC)
Close	25° (ATDC)
Duration	260°

Downloaded from www.vulcanriders-sweden.org

General Specifications

Items	VN1700C9F
Lubrication System	Forced lubrication (semi-dry sump)
Engine Oil:	
Type	API SE, SF or SG API SH, SJ, SL or SM with JASO MA, MA1 or MA2
Viscosity	SAE 10W-40
Capacity	5.0 L (5.3 US qt)
Drive Train	
Primary Reduction System:	
Type	Chain
Reduction Ratio	1.515 (50/33)
Clutch Type	Wet multi disc
Transmission:	
Type	6-speed, constant mesh, return shift
Gear Ratios:	
1st	3.077 (40/13)
2nd	1.900 (38/20)
3rd	1.407 (38/27)
4th	1.143 (32/28)
5th	0.967 (29/30)
6th	0.806 (29/36)
Final Drive System:	
Type	Belt
Reduction Ratio	2.250 (72/32)
Overall Drive Ratio	2.746 @Top gear
Frame	
Type	Tubular, double cradle
Caster (Rake Angle)	30°
Trail	169 mm (6.7 in.)
Front Tire:	
Type	Tubeless
Size	130/90 B16 M/C (67 H)
Rim Size	16 × 3.50
Rear Tire:	
Type	Tubeless
Size	170/70 B16 M/C (75 H)
Rim Size	16 × 4.50
Front Suspension:	
Type	Telescopic fork
Wheel Travel	140 mm (5.5 in.)
Rear Suspension:	
Type	Swingarm
Wheel Travel	80 mm (3.2 in.)

Downloaded from www.vulcanriders-sweden.org

General Specifications

Items	VN1700C9F
Brake Type:	
Front	Dual discs
Rear	Single disc
Electrical Equipment	
Battery	12 V 18 Ah
Headlight:	
Type	Semi-sealed beam
Bulb	12 V 60/55 W (quartz-halogen)
Tail/Brake Light	LED
Alternator:	
Type	Three-phase AC
Rated Output	46.8 A/14 V @5 000 r/min (rpm)

Specifications are subject to change without notice, and may not apply to every country.

Downloaded from www.vulcanriders-sweden.org

Electrical Throttle Valve (ETV) System

General Description

VN1700 series is equipped with the electronically-controlled throttle valve system called the Electrical Throttle Valve (ETV) system. The throttle pulley and the throttle valves of this system are not connected mechanically, and the throttle valves are electrically operated. On the other hand, the throttle grip and the throttle pulley are connected with two throttle cables in the same way as that for the conventional mechanically-operated throttle valve system to ensure the throttle operation feel without any strangeness. The accelerator position sensors (APS) that detect the throttle grip opening angle are installed to the throttle body, located near the center of the motorcycle to minimize the direct impact to the sensors when the motorcycle falls. The ETV system also features high durability thanks to the adoption of highly-durable contact-free throttle position sensors (TPS) and the duplex circuitry for the critical sensors, APS and TPS.

Some models of VN1700 series are equipped with an auto cruise control system as an auxiliary function of this system.

Construction and Function

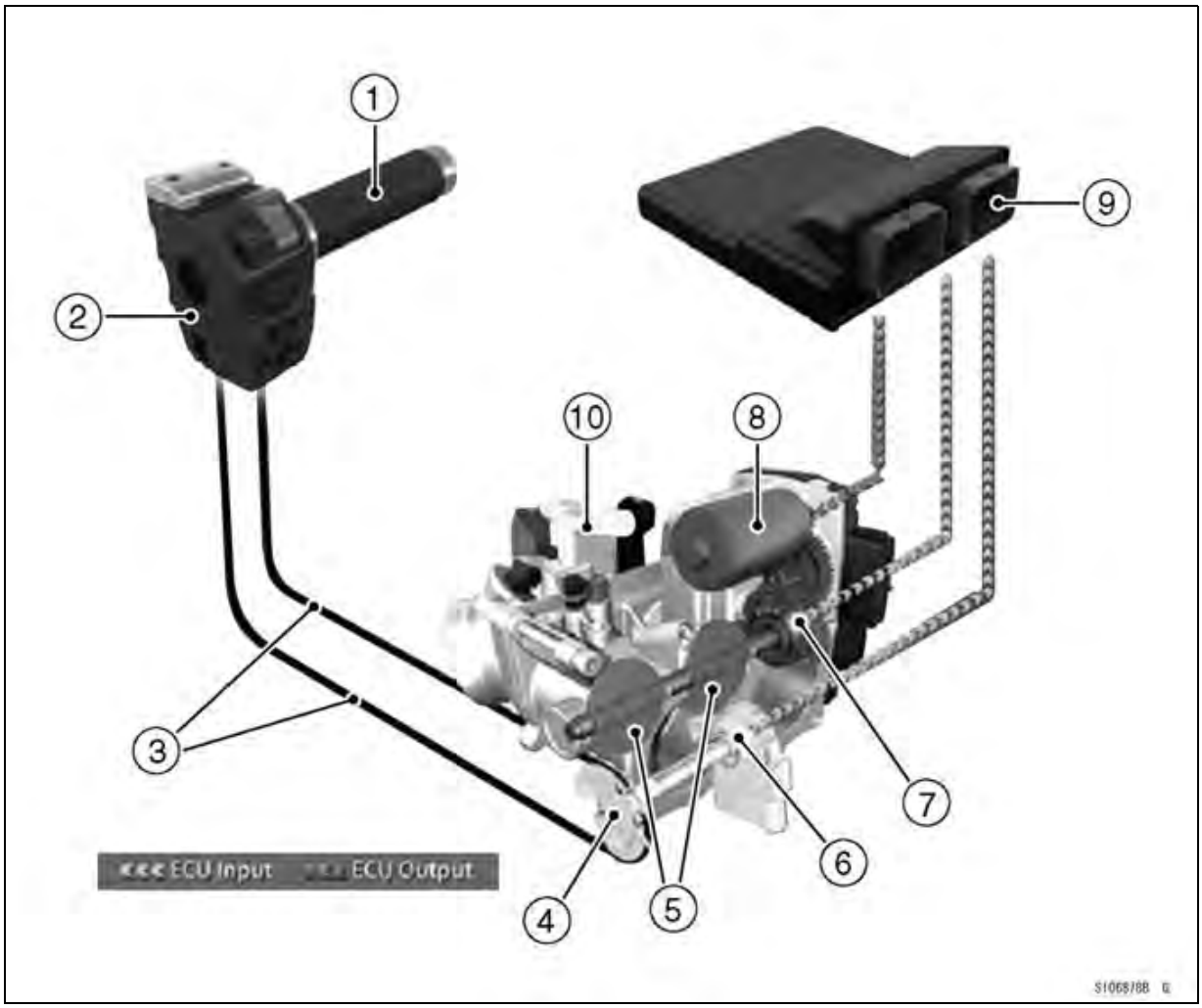

1. Throttle Grip
2. Right Handle Switch Housing
3. Throttle Cable
4. Throttle Pulley
5. Throttle Valve
6. Accelerator Position Sensor
7. Throttle Position Sensor
8. Actuator (DC Motor)
9. FI ECU
10. Throttle Body Assembly

Downloaded from www.vulcanriders-sweden.org

Electrical Throttle Valve (ETV) System

System Diagram

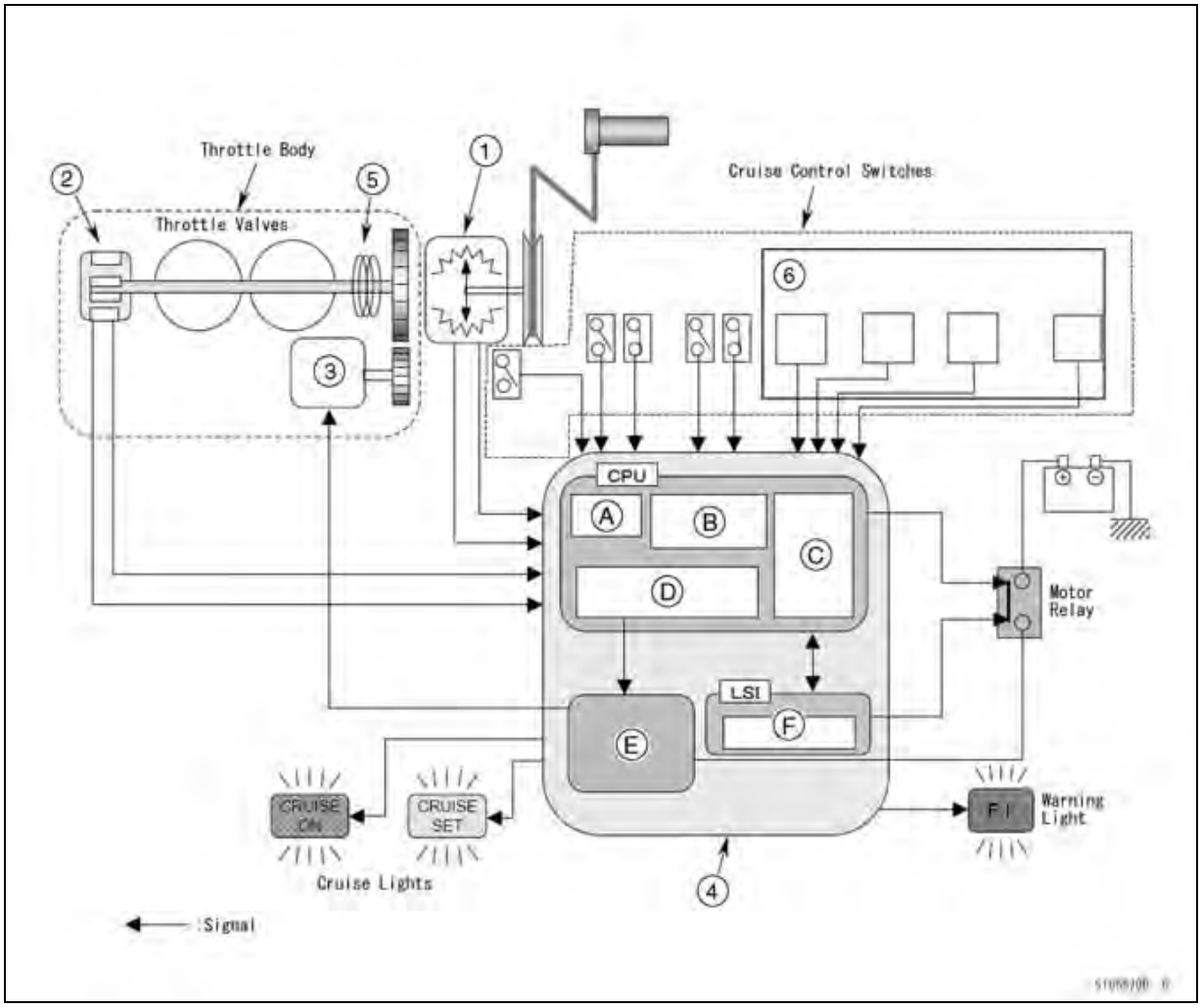

1. Accelerator Position Sensor #1 and #2
   The accelerator position sensor senses the rider's intention on throttle operation and transmits it to the ECU as an electrical signal. Each incorporating a built-in variable resistor, the two sensors independently work to detect the position of the pulley shaft.
2. Throttle Position Sensor #1 and #2
   The two contact-free, Hall-element type sensors independently work to detect the opening angle of the throttle valves.
3. Actuator (DC Motor)
   In response to the signal from the ECU, the actuator (DC motor) moves the throttle valves quickly to the target position via three gears.
4. FI ECU
   Receiving the accelerator position sensor signals, the ECU operates the actuator to move the throttle valves to the target opening angle, and verifies that the valves are in the target position by the throttle position sensor signals. The ECU performs the fail-safe control in case of a system failure. It also performs the cruise control function in the models equipped with cruise control system.
   The FI ECU has a large-scale integrated circuit (LSI) to monitor its central processing unit (CPU), and the CPU also has the function to monitor the LSI – they mutually monitor with each other for their correct operations.
   CPU (Central Processing Unit)
   LSI (Large-scale Integrated Circuit for Monitoring CPU)
   A. Fuel Injection Control Section
   B. Cruise Control Section
   C. Fail-safe Control and LSI Monitoring Section

Downloaded from www.vulcanriders-sweden.org

Electrical Throttle Valve (ETV) System

D. Throttle Valve Opening Control Section
E. Motor Drive Section
F. CPU Monitoring Section

5. Partial Opening Holding Device

When the actuator (DC motor) becomes incapable of throttle valve control, this device holds the throttle valve at a predetermined partially-open position by balancing the forces of the return spring and the open spring which pulls the throttle valve in the opening direction.

A. Partial Opening Holding Device
B. Open and Return Springs

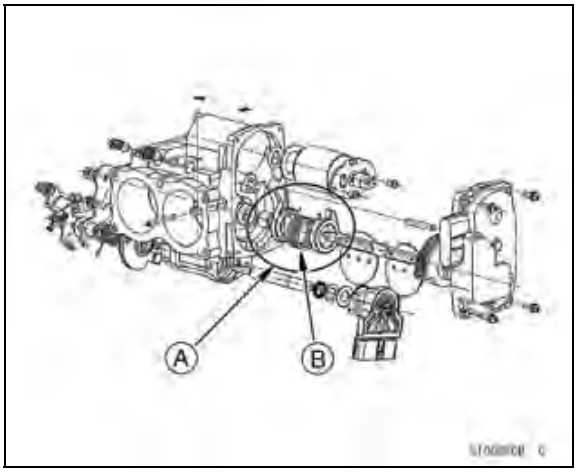

6. Right Handle Switch Housing

In the models equipped with cruise control system, the switches of the system are collectively installed to the right handle switch housing to facilitate the activation of the system during running.

Fail-safe System against System Failure

There are three fail-safe modes in accordance with the failure conditions: power limitation mode, limp-home mode, and idle mode.

1) Power Limitation Mode

If the ECU judges that one of the sensor signals from the accelerator position sensors or the throttle position sensors is incorrect but the ECU can control the ETV system using the other (correct) sensor signal, the ECU limits the engine output and flashes the warning light to warn the rider of the system failure.

2) Limp Home Mode

If the ECU cannot control the throttle valves correctly due to the failure of the actuator, both throttle position sensors or the like, the ECU cuts off the power to the actuator and fix the throttle valves at a partially-open position using the partial opening holding device to maintain the minimum driving capability.

3) Idle Mode

If the ECU judges that both of the accelerator position sensor signals are incorrect and therefore it cannot notice the rider's intension on throttle operation, the ECU flashes the warning light and fixes the engine speed to the idling speed.

Downloaded from www.vulcanriders-sweden.org

Unit Conversion Table

Prefixes for Units:

Prefix	Symbol	Power
mega	M	× 1 000 000
kilo	k	× 1 000
centi	c	× 0.01
milli	m	× 0.001
micro	μ	× 0.000001

Units of Mass:

kg	×	2.205	=	lb
g	×	0.03527	=	oz

Units of Volume:

L	×	0.2642	=	gal (US)
L	×	0.2200	=	gal (imp)
L	×	1.057	=	qt (US)
L	×	0.8799	=	qt (imp)
L	×	2.113	=	pint (US)
L	×	1.816	=	pint (imp)
mL	×	0.03381	=	oz (US)
mL	×	0.02816	=	oz (imp)
mL	×	0.06102	=	cu in

Units of Force:

N	×	0.1020	=	kg
N	×	0.2248	=	lb
kg	×	9.807	=	N
kg	×	2.205	=	lb

Units of Length:

km	×	0.6214	=	mile
m	×	3.281	=	ft
mm	×	0.03937	=	in

Units of Torque:

N·m	×	0.1020	=	kgf·m
N·m	×	0.7376	=	ft·lb
N·m	×	8.851	=	in·lb
kgf·m	×	9.807	=	N·m
kgf·m	×	7.233	=	ft·lb
kgf·m	×	86.80	=	in·lb

Units of Pressure:

kPa	×	0.01020	=	kgf/cm²
kPa	×	0.1450	=	psi
kPa	×	0.7501	=	cmHg
kgf/cm²	×	98.07	=	kPa
kgf/cm²	×	14.22	=	psi
cmHg	×	1.333	=	kPa

Units of Speed:

km/h	×	0.6214	=	mph

Units of Power:

kW	×	1.360	=	PS
kW	×	1.341	=	HP
PS	×	0.7355	=	kW
PS	×	0.9863	=	HP

Units of Temperature:

$$\frac{9(^\circ C + 40)}{5} - 40 = {}^\circ F \qquad \frac{5(^\circ F + 40)}{9} - 40 = {}^\circ C$$

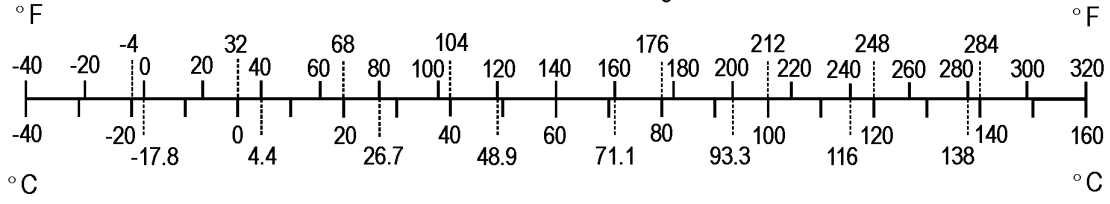

Downloaded from www.vulcanriders-sweden.org

Downloaded from www.vulcanriders-sweden.org

Periodic Maintenance

Table of Contents

Periodic Maintenance Chart 2-3
Torque and Locking Agent 2-7
Specifications 2-13
Special Tools 2-15
Periodic Maintenance Procedures 2-16
Fuel System (DFI) 2-16
Throttle Control System Inspection 2-16
Idle Speed Inspection 2-17
Idle Speed Adjustment 2-17
Fuel Hose Inspection (fuel leak, damage, installation condition) 2-20
Evaporative Emission Control System Inspection (CAL and SEA Models) 2-21
Cooling System 2-22
Coolant Level Inspection 2-22
Radiator Hose and Pipe Inspection (Coolant Leak, Damage, Installation Condition) 2-23
Engine Top End 2-23
Air Suction System Damage Inspection 2-23
Clutch 2-24
Clutch Operation Inspection 2-24
Clutch Fluid Level Inspection 2-24
Clutch Fluid Leak (Clutch Hose and Pipe) 2-24
Clutch Hose and Pipe Damage and Installation Condition Inspection 2-25
Wheels and Tires 2-25
Tire Air Pressure Inspection 2-25
Wheel/Tire Damage Inspection 2-25
Tire Tread Wear Inspection 2-25
Wheel Bearing Damage Inspection 2-26
Final Drive 2-27
Drive Belt Deflection Inspection 2-27
Drive Belt Deflection Adjustment 2-28
Wheel Alignment Inspection/Adjustment 2-30
Drive Belt Wear and Damage Inspection 2-30
Brakes 2-33
Brake Fluid Leak (Brake Hose and Pipe) Inspection 2-33
Brake Hose and Pipe Damage and Installation Condition Inspection 2-34
Brake Operation Inspection 2-34
Brake Fluid Level Inspection 2-34
Brake Pad Wear Inspection 2-35
Brake Light Switch Operation Inspection 2-35
Suspension 2-36
Front Forks/Rear Shock Absorber Operation Inspection 2-36
Front Fork Oil Leak Inspection 2-37
Rear Shock Absorber Oil Leak Inspection 2-37
Swingarm Pivot Lubrication 2-37
Steering 2-38
Steering Play Inspection 2-38
Steering Play Adjustment 2-38
Steering Stem Bearing Lubrication 2-40
Electrical System 2-40
Spark Plug Condition Inspection 2-40
Lights and Switches Operation 2-41

Downloaded from www.vulcanriders-sweden.org

Headlight Aiming Inspection 2-44
Sidestand Switch Operation Inspection 2-46
Engine Stop Switch Operation Inspection 2-47
Others 2-47
Chassis Parts Lubrication 2-47
Bolts, Nuts and Fasteners Tightness Inspection 2-48
Replacement Parts 2-50
Air Cleaner Element Replacement 2-50
Fuel Hose Replacement 2-51
Coolant Change 2-52
Radiator Hose and O-ring Replacement 2-54
Engine Oil Change 2-55
Oil Filter Replacement 2-56
Brake Hose and Pipe Replacement 2-57
Brake Fluid Change 2-57
Master Cylinder Rubber Parts Replacement 2-59
Caliper Rubber Parts Replacement 2-61
Clutch Hose and Pipe Replacement 2-64
Clutch Fluid Change 2-65
Clutch Master Cylinder Rubber Parts Replacement 2-66
Clutch Slave Cylinder Piston Seal Replacement 2-67
Spark Plug Replacement 2-67

Downloaded from www.vulcanriders-sweden.org

Periodic Maintenance Chart

Dummy Page

Downloaded from www.vulcanriders-sweden.org

2-4 PERIODIC MAINTENANCE

Periodic Maintenance Chart

The scheduled maintenance must be done in accordance with this chart to keep the motorcycle in good running condition.**The initial maintenance is vitally important and must not be neglected.**

Periodic Inspection

FREQUENCY / ITEM	Whichever comes first ➡ / ⬇ Every	* ODOMETER READING × 1 000 km (× 1 000 mile) 1 (0.6)	6 (3.75)	12 (7.5)	18 (11.25)	24 (15)	30 (18.75)	36 (22.5)	See Page
Fuel System									
Throttle control system (play, smooth return, no drag)-inspect	year	●		●		●		●	2–16
Idle speed-inspect		●		●		●		●	2–17
Fuel leak (fuel hose and pipe)-inspect	year	●		●		●		●	2–20
Fuel hose and pipe damage-inspect	year	●		●		●		●	2–20
Fuel hose and pipe installation condition-inspect	year	●		●		●		●	2–20
Evaporative emission control system function-inspect (CAL and SEA Models)		●	●	●	●	●	●	●	2–21
Cooling System									
Coolant level-inspect		●		●		●		●	2–22
Coolant leak (radiator hose and pipe)-inspect	year	●		●		●		●	2–23
Radiator hose damage-inspect	year	●		●		●		●	2–23
Radiator hose installation condition-inspect	year	●		●		●		●	2–23
Engine Top End									
Air suction system damage-inspect				●		●		●	2–23
Clutch									
Clutch operation (play, disengagement, engagement) -inspect		●		●		●		●	2–24
Clutch fluid level-inspect	6 months	●	●	●	●	●	●	●	2–24
Clutch fluid leak (clutch hose and pipe)-inspect	year	●	●	●	●	●	●	●	2–24
Clutch hose and pipe damage-inspect	year	●	●	●	●	●	●	●	2–25
Clutch hose installation condition-inspect	year	●	●	●	●	●	●	●	2–25
Wheels and Tires									
Tire air pressure-inspect	year			●		●		●	2–25
Wheel/tire damage-inspect				●		●		●	2–25
Tire tread wear, abnormal wear-inspect				●		●		●	2–25
Wheel bearing damage-inspect	year			●		●		●	2–26

Downloaded from www.vulcanriders-sweden.org

Periodic Maintenance Chart

FREQUENCY / ITEM	Whichever comes first ➡ / ⬇ Every	* ODOMETER READING × 1 000 km (× 1 000 mile) 1 (0.6)	6 (3.75)	12 (7.5)	18 (11.25)	24 (15)	30 (18.75)	36 (22.5)	See Page
Final Drive									
Drive belt deflection-inspect		●	●	●	●	●	●	●	2–27
Drive belt wear-inspect		●	●	●	●	●	●	●	2–30
Brakes									
Brake fluid leak (brake hose and pipe)-inspect	year	●	●	●	●	●	●	●	2–33
Brake hose and pipe damage-inspect	year	●	●	●	●	●	●	●	2–34
Brake hose installation condition-inspect	year	●	●	●	●	●	●	●	2–34
Brake operation (effectiveness, play, no drag)-inspect	year	●	●	●	●	●	●	●	2–34
Brake fluid level-inspect	6 months	●	●	●	●	●	●	●	2–34
Brake pad wear-inspect #			●	●	●	●	●	●	2–35
Brake light switch operation-inspect		●	●	●	●	●	●	●	2–35
Suspension									
Front forks/rear shock absorber operation (damping and smooth stroke)-inspect				●		●		●	2–36
Front forks/rear shock absorber oil leak-inspect	year			●		●		●	2–37 2–37
Swingarm pivot-lubricate						●			2–37
Steering									
Steering play-inspect	year	●		●		●		●	2–38
Steering stem bearings-lubricate	2 years					●			2–40
Electrical System									
Spark plug condition-inspect				●		●		●	2–40
Lights and switches operation-inspect	year			●		●		●	2–41
Headlight aiming-inspect	year			●		●		●	2–44
Sidestand switch operation-inspect	year			●		●		●	2–46
Engine stop switch operation -inspect	year			●		●		●	2–47
Others									
Chassis parts-lubricate	year			●		●		●	2–47
Bolts and nuts tightness-inspect		●		●		●		●	2–48

*: For higher odometer readings, repeat at the frequency interval established here.

#: Service more frequently when operating in severe conditions; dusty, wet, muddy, high speed or frequent starting/stopping.

Downloaded from www.vulcanriders-sweden.org

2-6 PERIODIC MAINTENANCE

Periodic Maintenance Chart

Periodic Replacement Parts

FREQUENCY / ITEM	Whichever come first ➡ / ⬇ Every	* ODOMETER READING × 1 000 km (× 1 000 mile)					See Page
		1 (0.6)	12 (7.5)	24 (15)	36 (22.5)	48 (30)	
Air cleaner element-replace #	Every 18 000 km (11 250 mile)						2–50
Fuel hose-replace	4 years					●	2–51
Coolant-change	3 years				●		2–52
Radiator hose and O-ring-replace	3 years				●		2–54
Engine oil-change #	year	●	●	●	●	●	2–55
Oil filter-replace	year	●	●	●	●	●	2–56
Brake hose and pipe-replace	4 years					●	2–57
Brake fluid-change	2 years			●		●	2–57
Rubber parts of brake master cylinder and caliper-replace	4 years					●	2–59 2–61
Clutch hose and pipe-replace	4 years					●	2–64
Clutch fluid-change	2 years			●		●	2–65
Rubber parts of clutch master cylinder and slave cylinder-replace	4 years					●	2–66
Spark plug-replace	Every 48 000 km (30 000 mile)						2–67

*: For higher odometer readings, repeat at the frequency interval established here.

#: Service more frequently when operating in severe conditions; dusty, wet, muddy, high speed or frequent starting/stopping.

Downloaded from www.vulcanriders-sweden.org

Torque and Locking Agent

The following tables list the tightening torque for the major fasteners requiring use of a non-permanent locking agent or silicone sealant etc.

Letters used in the “Remarks” column mean:
AL: Tighten the two clamp bolts alternately two times to ensure even tightening torque.
L: Apply a non-permanent locking agent.
Lh: Left-hand Threads
M: Apply molybdenum disulfide grease.
MO: Apply molybdenum disulfide oil solution.
(mixture of the engine oil and molybdenum disulfide grease in a weight ratio 10 : 1)
O: Apply 2-stroke oil.
R: Replacement Parts
S: Follow the specified tightening sequence.
Si: Apply silicone grease (ex. PBC grease).
SS: Apply silicone sealant.

Fastener	Torque			Remarks
	N·m	kgf·m	ft·lb	
Fuel System				
Air Cleaner Housing Cover Bolts	4.9	0.50	43 in·lb	
Air Cleaner Element Bolt	4.9	0.50	43 in·lb	
Air Cleaner Housing Bolts	9.8	1.0	87 in·lb	
Crankshaft Sensor Bolts	5.9	0.60	52 in·lb	
Delivery Joint Bolts	9.8	1.0	87 in·lb	L
Fuel Pump Bolts	9.8	1.0	87 in·lb	L, S
Gear Position Switch Bolts	4.9	0.50	43 in·lb	L
Inlet Manifold Bolts	9.8	1.0	87 in·lb	L
Right Air Cleaner Housing Center Bolts	9.8	1.0	87 in·lb	L
Speed Sensor Mounting Bolt	9.8	1.0	87 in·lb	L
Throttle Body Assy Holder Bolts	9.8	1.0	87 in·lb	
Throttle Cable Holder Plate Screw	2.0	0.20	18 in·lb	
Water Temperature Sensor	12	1.2	106 in·lb	
Cruise Control Cancel Switch (Throttle) Mounting Nut	0.28	0.03	2.5	L
Oxygen Sensor (Equipped Models)	25	2.5	18	
Cooling System				
Cross Pipe Bolts	34	3.5	25	
Radiator Fan Bolts	8.3	0.85	73 in·lb	
Radiator Hose Clamp Screws	2.0	0.20	18 in·lb	
Thermostat Housing Cover Bolts	9.8	1.0	87 in·lb	
Water Pipe Bolts	12	1.2	106 in·lb	
Water Pump Impeller Bolt	12	1.2	106 in·lb	Lh
Water Separator Inner Cover Bolts	12	1.2	106 in·lb	
Water Separator Outer Cover Bolts	12	1.2	106 in·lb	
Water Temperature Sensor	12	1.2	106 in·lb	
Engine Top End				
Breather Check Valve Cover Bolts	9.8	1.0	87 in·lb	
Cylinder Head Nuts (M12) (First)	39	4.0	29	MO, S
Cylinder Head Nuts (M12 New Nuts) (Final)	70	7.1	52	MO, S

Downloaded from www.vulcanriders-sweden.org

Torque and Locking Agent

Fastener	Torque			Remarks
	N·m	kgf·m	ft·lb	
Cylinder Head Nuts (M12 Used Nuts) (Final)	77	7.8	57	MO, S
Cylinder Head Nuts (M10) (First)	20	2.0	15	MO, S
Cylinder Head Nuts (M10) (Final)	39	4.0	29	MO, S
Cylinder Head Outer Cover Bolts	9.8	1.0	87 in·lb	L
Cylinder Head Inner Cover Bolts	9.8	1.0	87 in·lb	
Plugs	20	2.0	15	L
Rocker Case Bolts (M8)	20	2.0	15	S
Rocker Case Bolts (M6)	9.8	1.0	87 in·lb	S
Spark Plugs	18	1.8	13	
Water Pipe Fitting Bolts	9.8	1.0	87 in·lb	
Camshaft Chain Tensioner Bolts	12	1.2	106in·lb	L
Camshaft Sprocket Bolts	15	1.5	11	L
Exhaust Pipe Holder Nuts	17	1.7	12	
Muffler Body Mounting Bolt	25	2.5	18	
Rear Camshaft Chain Guide Retainer Bolts	9.8	1.0	87 in·lb	
Clutch				
Cam Damper Bolt	69	7.0	51	
Clutch Cover Bolts	12	1.2	106 in·lb	
Clutch Hose Banjo Bolt	25	2.5	18	
Clutch Hub Nut	185	19.0	136	MO, R
Clutch Lever Pivot Bolt	1.0	0.10	8.8 in·lb	Si
Clutch Lever Pivot Bolt Locknut	5.9	0.60	52 in·lb	
Clutch Master Cylinder Clamp Bolts	11	1.1	97 in·lb	S
Clutch Reservoir Cap Screws	1.5	0.15	13 in·lb	
Clutch Slave Cylinder Bleed Valve	7.8	0.80	69 in·lb	
Clutch Slave Cylinder Bolts	12	1.2	106 in·lb	L
Clutch Spring Bolts	12	1.2	106 in·lb	
Front Outer Clutch Cover Bolts	9.8	1.0	87 in·lb	L
Primary Chain Guide Bolts	9.8	1.0	87 in·lb	L
Rear Outer Clutch Cover Bolts	9.8	1.0	87 in·lb	L
Starter Lockout Switch Screw	1.2	0.12	11 in·lb	
Cruise Control Cancel Switch (Clutch) Screw	1.2	0.12	11 in·lb	
Clutch Pipe Bracket Bolt	12	1.2	106 in·lb	
Engine Lubrication System				
Breather Check Valve Cover Bolts	9.8	1.0	87 in·lb	
Engine Oil Drain Bolts	20	2.0	14	
Inside Oil Pipe Retainer Bolt	9.8	1.0	87 in·lb	L
Oil Filter	18	1.8	13	
Oil Filter Pipe	25	2.5	18	L
Oil Passage Plug (PT1/8)	15	1.5	11	L
Oil Pressure Relief Valve	15	1.5	11	L
Oil Pressure Switch	15	1.5	11	SS
Oil Pressure Switch Terminal Bolt	-	-	-	Hand-tighten

Downloaded from www.vulcanriders-sweden.org

Torque and Locking Agent

Fastener	Torque			Remarks
	N·m	kgf·m	ft·lb	
Oil Pump Cover Bolts	12	1.2	106 in·lb	
Oil Pump Drive Gear Bolt	42	4.3	31	MO
Oil Screen Plugs	20	2.0	15	M
Out Side Oil Pipe Bolts	9.8	1.0	87 in·lb	
Torque Limiter Bearing Retainer Bolt	9.8	1.0	87 in·lb	
Engine Removal/Installation				
Cross Pipe Bolts	34	3.5	25	
Downtube Bolts	59	6.0	44	
Engine Mounting Adjusting Bolt	9.8	1.0	87 in·lb	S
Engine Mounting Adjusting Bolt Locknut	49	5.0	36	S
Engine Mounting Bolt (M10)	44	4.5	32	
Engine Mounting Bracket Bolts (M6)	9.8	1.0	87 in·lb	S
Engine Mounting Bracket Bolts (M8)	25	2.5	18	S
Engine Mounting Bracket Bolts (M10)	44	4.5	32	
Engine Mounting Bracket Nuts (M10)	59	6.0	43	R
Engine Mounting Nut (M10)	44	4.5	32	R
Engine Mounting Nut (M12)	59	6.0	43	R, S
Crankshaft/Transmission				
Balancer Chain Tensioner Bolts	12	1.2	106 in·lb	
Balancer Sprocket Bolts	83	7.0	51	
Ball Bearing Retainer Bolts	9.8	1.0	87 in·lb	L
Ball Bearing Retainer Screws	9.8	1.0	87 in·lb	L
Connecting Rod Big End Bolts	60	6.1	44	MO
Crankcase Bolts (M10)	39	4.0	29	S
Crankcase Bolts (M6)	12	1.2	106 in·lb	S
Engine Pulley Plate Bolts	12	1.2	106 in·lb	
Oil Nozzles	3.9	0.40	34 in·lb	
Oil Passage Plugs (PT1/2)	20	2.0	15	L
Oil Passage Plug (PT3/8)	20	2.0	15	L
Oil Passage Plugs (PT1/8)	15	1.5	11	L
Piston Oil Jet Bolts	6.9	0.70	61 in·lb	L
Race Retainer Screw	9.8	1.0	87 in·lb	L
Upper Balancer Chain Guide Bolts	12	1.2	106 in·lb	
Lower Balancer Chain Guide Bolts	12	1.2	106 in·lb	
External Shift Mechanism Cover Bolts (L = 50 mm)	12	1.2	106 in·lb	
External Shift Mechanism Cover Bolts (L = 22 mm)	12	1.2	106 in·lb	
Gear Positioning Lever Nut	7.8	0.80	69 in·lb	
Shift Drum Bearing Retainer Bolts	9.8	1.0	87 in·lb	L
Shift Drum Cam Bolt	12	1.2	106 in·lb	L
Shift Lever Bolts	12	1.2	106 in·lb	
Shift Pedal Pad Screw	6.9	0.70	61 in·lb	

Downloaded from www.vulcanriders-sweden.org

Torque and Locking Agent

Fastener	Torque			Remarks
	N·m	kgf·m	ft·lb	
Shift Shaft Return Spring Pin	39	4.0	29	L
Tie-Rod Locknuts	9.8	1.0	87 in·lb	Lh (1)
Wheels/Tires				
Front Axle	127	13.0	94	
Front Axle Clamp Bolts	20	2.0	15	S
Rear Axle Nut	108	11.0	80	
Rear Air Valve Nuts	1.5	0.15	13 in·lb	
Final Drive				
Engine Pulley Mounting Nut	175	18.0	129	M
Engine Pulley Inner Cover Bolts	12	1.2	106 in·lb	
Engine Pulley Outer Cover Bolts	9.8	1.0	87 in·lb	
Rear Axle Nut	108	11.0	80	
Rear Coupling Stud Bolts	44	4.5	33	L
Rear Pulley Mounting Nuts	59	6.0	44	R
Rear Pulley Plate Bolts	6.9	0.70	61 in·lb	L
Brakes				
Bleed Valves	7.8	0.80	69 in·lb	
Brake Hose Banjo Bolts	25	2.5	18	
Brake Lever Pivot Bolt	1.0	0.10	8.9 in·lb	Si
Brake Lever Pivot Bolt Locknut	5.9	0.60	52 in·lb	
Front Brake Disc Mounting Bolts	27	2.8	20	L
Front Brake Light Switch Screw	1.2	0.12	11 in·lb	
Front Brake Reservoir Cap Screws	1.5	0.15	13 in·lb	
Front Caliper Mounting Bolts	34	3.5	25	
Front Master Cylinder Clamp Bolts	11	1.1	97 in·lb	S
Brake Pedal Bolt	8.8	0.90	78 in·lb	
Rear Brake Disc Mounting Bolts	27	2.8	20	L
Rear Caliper Mounting Bolts	34	3.5	25	
Rear Master Cylinder Mounting Bolts	25	2.5	18	
Rear Master Cylinder Push Rod Locknut	17.2	1.8	13	
Suspension				
Upper Front Fork Clamp Bolts	20	2.0	15	
Lower Front Fork Clamp Bolts	30	3.0	22	AL
Fork Cover Clamp Bolts	4.2	0.43	37 in·lb	
Front Fork Bottom Allen Bolts	20	2.0	15	L
Front Axle Clamp Bolts	20	2.0	15	S
Rear Shock Absorber Nuts	34	3.5	25	
Rear Shock Absorber Air Valve	5.5	0.56	49 in·lb	
Swingarm Pivot Shaft Nut	108	11.0	80	
Steering				
Handlebar Clamp Bolts	34	3.5	25	O, S
Handlebar Holder Nuts	59	6.0	44	R
Lower Front Fork Clamp Bolts	30	3.0	22	AL

Downloaded from www.vulcanriders-sweden.org

Torque and Locking Agent

Fastener	Torque			Remarks
	N·m	kgf·m	ft·lb	
Steering Stem Head Nut	88	9.0	65	
Steering Stem Nut	29	3.0	22	
Upper Front Fork Clamp Bolts	20	2.0	15	
Frame				
Cross Pipe Bolts	34	3.5	25	
Downtube Bolts	59	6.0	44	
Front Footboard Bracket Bolts	34	3.5	25	L
Rear Footboard Bracket Bolts	25	2.5	18	
Sidestand Mounting Bolt	44	4.5	32	
Sidestand Mounting Nut	44	4.5	32	R
Sidestand Switch Mounting Bolt	8.8	0.90	78 in·lb	L
Rear Fender Allen Bolts	25	2.5	18	
Cross Bar Mounting Bolts	25	2.5	18	
Front Guard Mounting Bolts	34	3.5	25	
Rear Guard Mounting Bolts	25	2.5	18	
Saddlebag Stay Bolts	25	2.5	18	
Electrical System				
Alternator Cover Bolts	12	1.2	106 in·lb	
Alternator Harness Clamp Bolt	9.8	1.0	87 in·lb	
Alternator Rotor Bolt	150	15.3	111	MO
Alternator Stator Coil Lead Connector Stay Bolt	9.8	1.0	87 in·lb	
Alternator Stator Coil Mounting Bolts	12	1.2	106 in·lb	L
Crankshaft Sensor Bolts	5.9	0.60	52 in·lb	
Crankshaft Sensor Lead Holding Plate Bolt	5.9	0.60	52 in·lb	L
Gear Position Switch Lead Holding Plate Bolt	4.9	0.50	43 in·lb	L
Gear Position Switch Bolts	3.9	0.40	35 in·lb	L
Oil Pressure Switch	15.0	1.5	11	SS
Oil Pressure Switch Terminal Bolt	-	-	-	Hand-tighten
Oxygen Sensor (Equipped Models)	25	2.5	18	
Spark Plugs	18.0	1.8	13	
Speed Sensor Mounting Bolt	9.8	1.0	87 in·lb	L
Starter Motor Mounting Bolts	9.8	1.0	87 in·lb	L
Starter Motor Terminal Locknut	11	1.1	97 in·lb	
Starter Motor Terminal Nut	5.9	0.60	52 in·lb	
Starter Motor Through Bolts	5.0	0.51	44 in·lb	
Stator Lead Holding Plate Bolts	5.9	0.60	52 in·lb	L
Engine Ground Mounting Bolt	9.8	1.0	87 in·lb	
Front Brake Light Switch Screw	1.2	0.12	11 in·lb	
Fuel Pump Bolts	9.8	1.0	87 in·lb	L, S
Sidestand Switch Mounting Bolt	8.8	0.90	78 in·lb	L
Starter Lockout Switch Screw	1.2	0.12	11 in·lb	
Cruise Control Cancel Switch (Clutch) Screw	1.2	0.12	11 in·lb	

Downloaded from www.vulcanriders-sweden.org

Torque and Locking Agent

Fastener	Torque			Remarks
	N·m	kgf·m	ft·lb	
Water Temperature Sensor	12	1.2	106 in·lb	
Licence Plate Light Lens Screws	0.9	0.09	8 in·lb	

The table below, relating tightening torque to thread diameter, lists the basic torque for the bolts and nuts. Use this table for only the bolts and nuts which do not require a specific torque value. All of the values are for use with dry solvent-cleaned threads.

Basic Torque for General Fasteners

Threads dia. (mm)	Torque		
	N·m	kgf·m	ft·lb
5	3.4 ~ 4.9	0.35 ~ 0.50	30 ~ 43 in·lb
6	5.9 ~ 7.8	0.60 ~ 0.80	52 ~ 69 in·lb
8	14 ~19	1.4 ~1.9	10 ~ 13.5
10	25 ~ 34	2.6 ~ 3.5	19 ~ 25
12	44 ~ 61	4.5 ~ 6.2	33 ~ 45
14	73 ~ 98	7.4 ~ 10.0	54 ~ 72
16	115 ~ 155	11.5 ~ 16.0	83 ~ 115
18	165 ~ 225	17.0 ~ 23.0	125 ~ 165
20	225 ~ 325	23.0 ~ 33.0	165 ~ 240

Downloaded from www.vulcanriders-sweden.org

Specifications

Item	Standard	Service Limit
Fuel System (DFI)		
Throttle Grip Free Play	2 ~ 3 mm (0.08 ~ 0.12 in.)	– – –
Idle Speed	950 ±50 r/min (rpm)	– – –
Air Cleaner Element	Viscous paper element	– – –
Cooling System		
Coolant:		
Type (Recommended)	Permanent type antifreeze	– – –
Color	Green	– – –
Mixed Ratio	Soft water 50%, Coolant 50%	– – –
Freezing Point	–35°C (–31°F)	– – –
Total Amount	2.4 L (2.5 US qt)	– – –
Engine Top End		
Valve Clearance	Non-adjustable (HLA Type)	– – –
Clutch		
Clutch Fluid:		
Grade	DOT4	– – –
Engine Lubrication System		
Engine Oil:		
Grade	API SE, SF or SG API SH, SJ, SL or SM with JASO MA, MA1 or MA2	– – –
Viscosity	SAE 10W-40	– – –
Capacity	4.1 L (4.3 US qt, when filter is not removed)	– – –
	4.3 L (4.5 US qt, when filter is removed)	– – –
	5.0 L (5.3 US qt, when engine is completely dry)	– – –
Level	Between upper and lower level lines (Wait 2 ~ 3 minutes after idling or running)	– – –
Wheels/Tires		
Tread Depth:		
Front	4.3 mm (0.17 in.)	1 mm (0.04 in.) (AT, CH, DE): 1.6 mm (0.06 in.)
Rear	7.2 mm (0.28 in.)	Up to 130 km/h (80 mph): 2 mm (0.08 in.) Over 130 km/h (80 mph): 3 mm (0.1 in.)
Air Pressure: (when Cold)		
Front	Up to 180 kg (397 lb) load: 200 kPa (2.00 kgf/cm², 28 psi)	– – –
Rear	Up to 97.5 kg (215 lb) load: 250 kPa (2.50 kgf/cm², 36 psi)	– – –
	97.5 ~ 180 kg (215 ~ 397 lb) load: 280 kPa (2.80 kgf/cm², 40 psi)	– – –

Downloaded from www.vulcanriders-sweden.org

Specifications

Item	Standard	Service Limit
Final Drive		
Drive Belt Deflection:		
(45 N, 4.6 kgf, 10 lb force)	3.0 ~ 4.5 mm (0.12 ~ 0.18 in.)	– – –
(When installing new belt or engine is remounted)	3.0 mm (0.12 in.)	– – –
Brakes		
Brake Fluid:		
Grade	DOT4	– – –
Brake Pad Lining Thickness:		
Front	4.5 mm (0.18 in.)	1 mm (0.04 in.)
Rear	7.0 mm (0.28 in.)	1 mm (0.04 in.)
Brake Light Timing:		
Front	Pulled ON	– – –
Rear	ON after about 10 mm (0.39 in.) of pedal travel	– – –
Electrical System		
Spark Plug:		
Type	NGK ILZKAR7B11	– – –
Gap	1.0 ~ 1.1 mm (0.031 ~ 0.035 in.)	– – –

Downloaded from www.vulcanriders-sweden.org

Special Tools

Inside Circlip Pliers:
57001-143

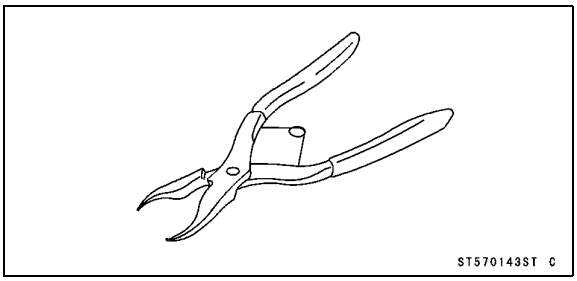

Oil Filter Wrench:
57001-1249

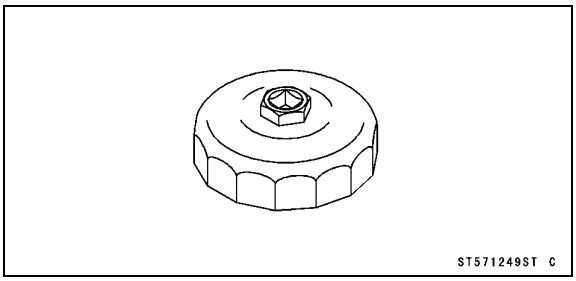

Steering Stem Nut Wrench:
57001-1100

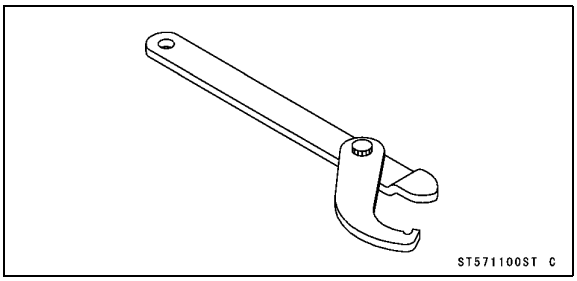

Tension Gauge:
57001-1585

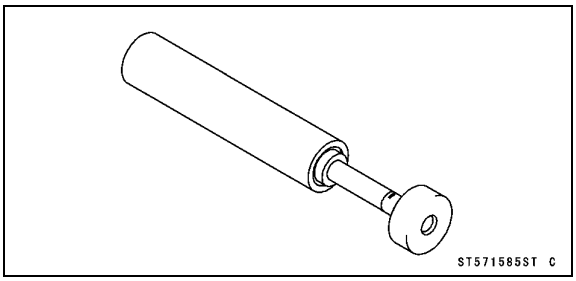

Downloaded from www.vulcanriders-sweden.org

Periodic Maintenance Procedures

Fuel System (DFI)

Throttle Control System Inspection

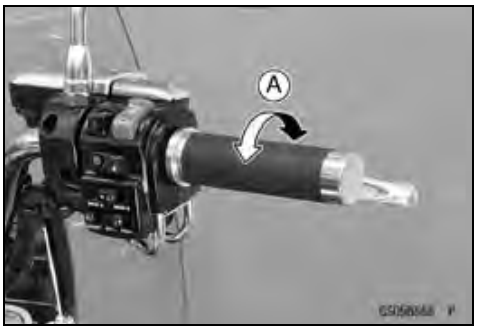

- Check the throttle grip free play [A].

Throttle Grip Free Play
Standard: 2 ~ 3 mm (0.08 ~ 0.12 in.)

★If the free play is incorrect, adjust the throttle grip free play as follows.

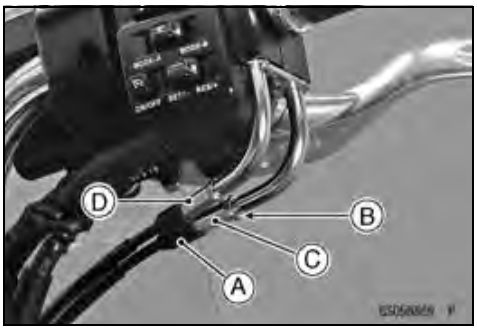

- Slide the dust cover [A].
- Loosen the locknut [B].
- Turn the accelerator cable adjuster [C] until 2 ~ 3 mm (0.08 ~ 0.12 in.) of throttle grip play is obtained.
- Tighten the locknut.
- Slide the dust cover to the original position.

★If the free play cannot be adjusted by using the accelerator cable adjuster, use the decelerator cable adjuster [D] and accelerator cable adjuster make the necessary free play.

★If the free play cannot be adjusted with the adjusters, replace the cables.

★If the throttle grip free play is adjusted, confirm the following inspections.
Full Throttle Pulley Position Inspection (see Cable Installation in the Fuel System (DFI) chapter)
Cruise Control Cancel Switch (Throttle) Operation Inspection (see Cable Installation in the Fuel System (DFI) chapter)

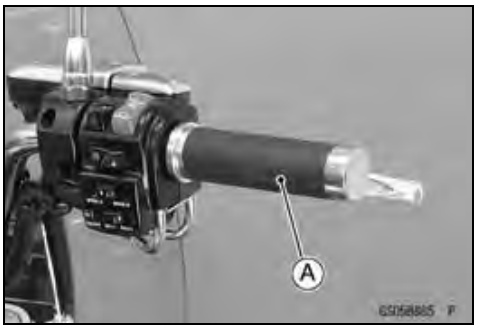

- Check that the throttle grip [A] moves smoothly from full open to close, and the throttle closes quickly and completely by the return spring in all steering positions.

★If the throttle grip does not return properly, check the throttle cables routing, grip free play and cable damage. Then lubricate the throttle cable.

- Run the engine at the idle speed, and turn the handlebar all the way to the right and left to ensure that the idle speed does not change.

★If the idle speed increases, check the throttle cable free play and the cable routing.

Downloaded from www.vulcanriders-sweden.org

Periodic Maintenance Procedures

Idle Speed Inspection

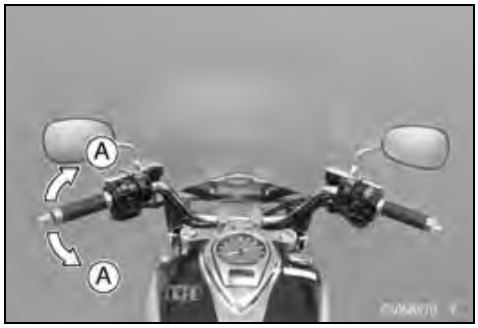

- Start the engine and warm it up thoroughly.
  - ○At first the engine will run fast to decrease warm up time (fast idle).
  - ○Gradually the fast idle will lower to a certain RPM automatically. This is the idle speed.
- With the engine idling, turn the handlebar to both sides [A].
  - ★If handlebar movement changes the idle speed, the throttle cables may be improperly adjusted or incorrectly routed or damaged. Be sure to correct any of these conditions before riding (see Cable, Wire, and Hose Routing section in the Appendix chapter).

⚠ WARNING

Operation with improperly adjusted, incorrectly routed or damaged cables could result in an unsafe riding condition.

- Check the idle speed.
  - ★If the idle speed is out of the specified range, adjust it (see Idle Speed Adjustment).

Idle Speed

Standard: 950 ±50 r/min (rpm)

Idle Speed Adjustment

NOTE

- ○*This motorcycle is equipped with the ETV (Electrical Throttle Valve) system to control the throttle valves electrically. The idle speed is adjusted automatically at the specified value (950 r/min (rpm)) by the ETV system. Therefore, it is not necessary to adjust the idle speed normally.*
- ○*The idle speed can be adjusted by operating the right switch housing.*

- Set the gear position in the neutral.
- Start the engine and warm it up thoroughly until the water temperature goes up 60°C (140°F) or more.
- Wait until fast idle speed lowers to a certain value.

Downloaded from www.vulcanriders-sweden.org

Periodic Maintenance Procedures

- Push the “S” button [A] of the right switch housing for more than two seconds to display the clock setting mode [B] on the LCD (Liquid Crystal Display).



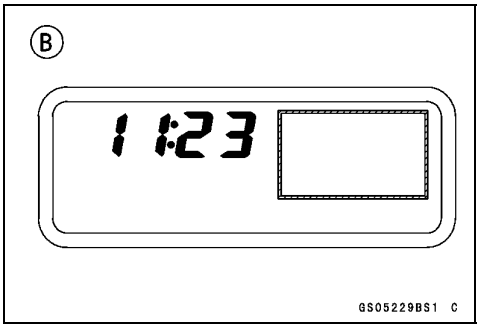

Downloaded from www.vulcanriders-sweden.org

Periodic Maintenance Procedures

● Push the “S” button to display the idle speed adjusting mode [A].

NOTE

○*The display change to the clock setting mode [B], average fuel consumption unit setting mode [C], idle speed adjusting mode each time the “S” button is pressed.*
○*The initial setting value of the idle speed adjusting mode is the “0” (this shows 950 r/min (rpm)).*
○*The idle adjusting mode is displayed with following conditions.*

1. The gear position is neutral.
2. The water temperature is 60°C (140°F) or more.
3. The engine is running and the speedometer is the 0 km/h.
4. The fast idle was finished.

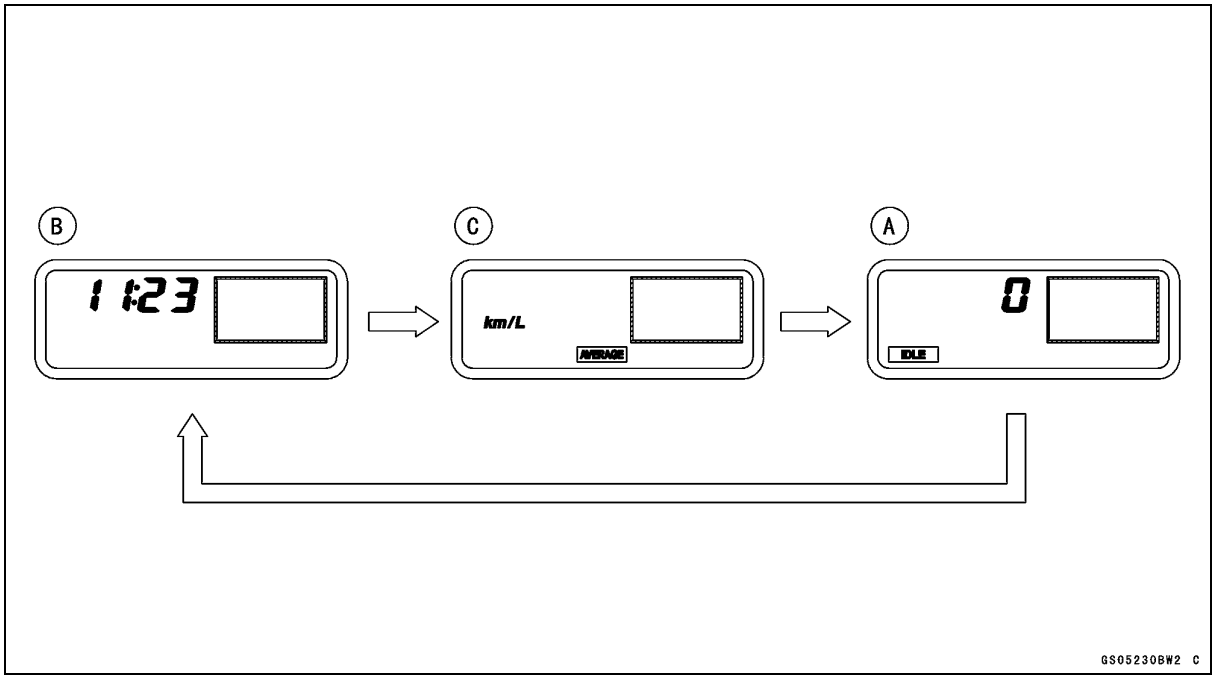

● Adjust the idle speed by pushing the “MODE-A” switch (left position) [A] or “MODE-B” switch (right position) [B] of the right switch housing as follows.

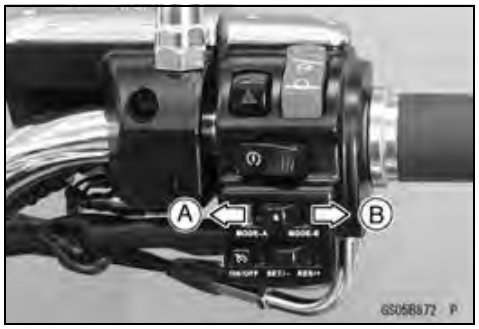

Downloaded from www.vulcanriders-sweden.org

Periodic Maintenance Procedures

○The idle speed goes up 50 r/min (rpm) at one time by pushing the “MODE-A” switch.
○When pushing the “MODE-A” switch, the value on the display shows the “+50” [A] (this shows 1 000 r/min (rpm)).
○The idle speed goes down 50 r/min (rpm) at one time by pushing the “MODE-B” switch.
○When pushing the “MODE-B” switch, the value on the display shows the “–50” [B] (this shows 900 r/min (rpm)).

NOTE

○*When pushing the “MODE-B” switch for more than two seconds, the value on the display shows the “0” [C] (initial setting value).*
○*The idle speed can be set with 850 ~ 1 100 r/min (rpm).*

○Open and close the throttle a few times to make sure that the idle speed is within the specified range. Readjust if necessary.

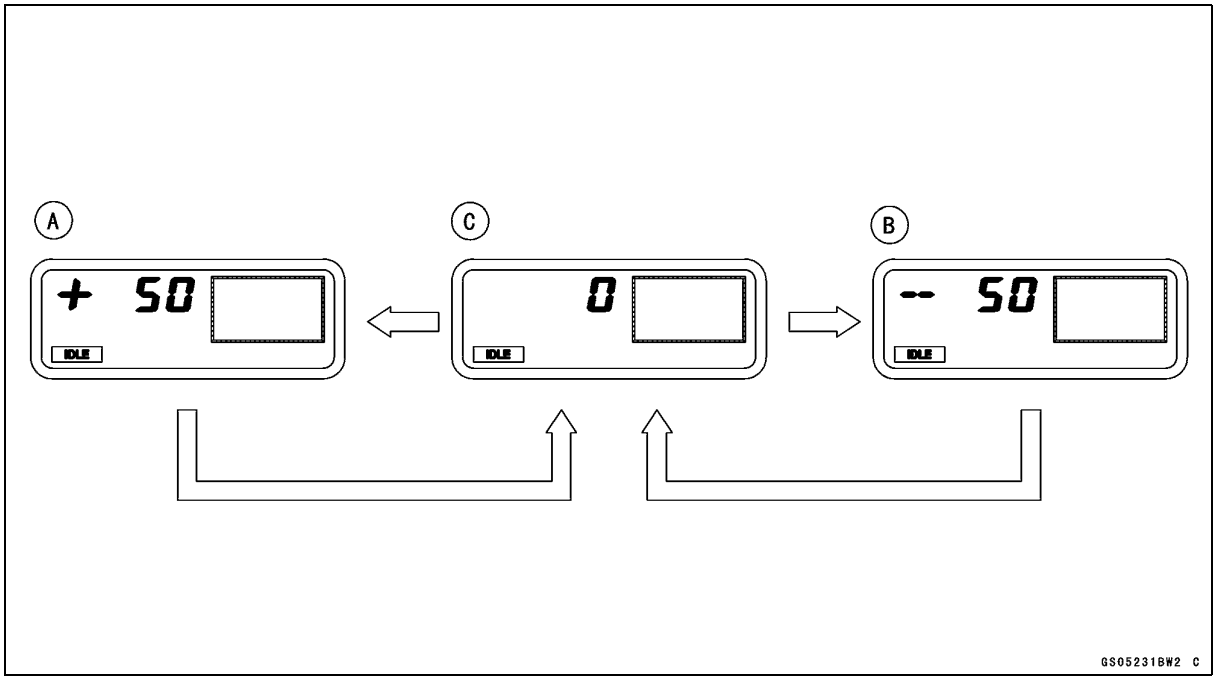

● Any of the following procedures ends idle speed adjusting mode.
○Push the “S” button for more than two seconds.
○When the engine is stopped.

Fuel Hose Inspection (fuel leak, damage, installation condition)

○If the motorcycle is not properly handled, the high pressure inside the fuel line can cause fuel to leak [A] or the hose to burst. Remove the fuel tank (see Fuel Tank Removal in the Fuel System (DFI) chapter) and check the fuel hoses.
★Replace the fuel hose if any fraying, cracks [B] or bulges [C] are noticed.

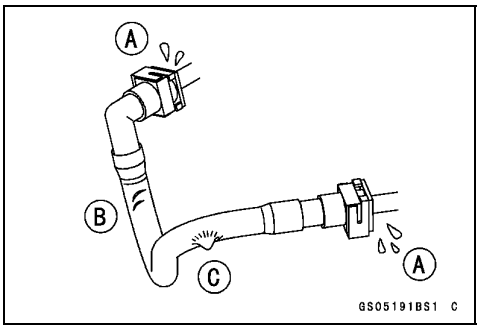

Downloaded from www.vulcanriders-sweden.org

Periodic Maintenance Procedures

● Check that the fuel hose [A] are routed according to Cable, Wire, and Hose Routing section in the Appendix chapter.
★Replace the hose if it has been sharply bent or kinked.



● Check that the fuel hose joints are securely connected.
○Push and pull [A] the fuel hose joint [B] back and forth more than two times, and make sure it is locked.
○Check the other hose joint in the same way.

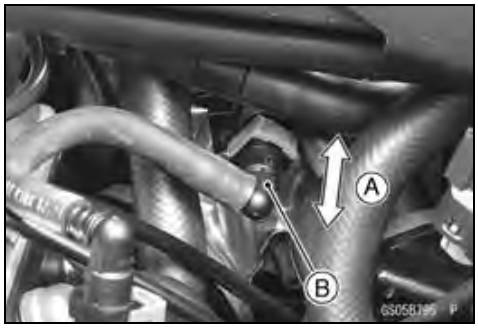

⚠ WARNING

Make sure the hose joint is installed correctly on the delivery pipe by sliding the joint, or the fuel could leak.

★If it does not locked, reinstall the hose joint.

Evaporative Emission Control System Inspection (CAL and SEA Models)

● Inspect the canister as follows.
○Remove:
Band [A]
Canister/Separator Bracket Bolts [B]
○Disconnect the hoses from the canister [C], and remove the canister.
○Visually inspect the canister for cracks or other damage.
★If the canister has any cracks or bad damage, replace it with a new one.

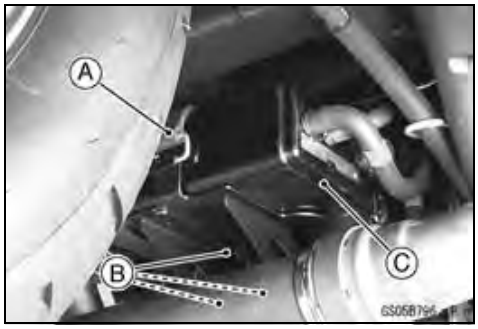

NOTE

○*The canister is designed to work well through the motorcycle's life without any maintenance if it is used under normal conditions.*

Downloaded from www.vulcanriders-sweden.org

Periodic Maintenance Procedures



● Check the liquid/vapor separator as follows.
○Remove:
Canister
Band [A]
○Disconnect the hoses from the separator [B], and remove the separator.
○Visually inspect the separator for cracks and other damage.
★If the separator has any cracks or damage, replace it with a new one.
○To prevent the gasoline from flowing into or out of the canister, hold the separator perpendicular to the ground.
● Check the hoses of the evaporative emission control system as follows.
○Check that the hoses are securely connected and clips are in position.
○Replace any kinked, deteriorated or damaged hoses.
○Route the hoses according to Cable, Wire, and Hose Routing section in the Appendix chapter.
○When installing the hoses, avoid sharp bending, kinking, flattening or twisting, and route the hoses with a minimum of bending so that the emission flow will not be obstructed.

Cooling System

Coolant Level Inspection

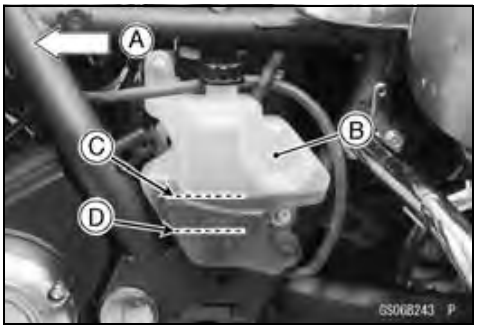

NOTE

○Check the level when the engine is cold (room or ambient temperature).

● Check the coolant level in the reserve tank with the motorcycle held upright. The coolant level should be between the “F” (full) level and the “L” (low) level (In the photo, the right side cover has been removed for clarity).
Front [A]
Reserve Tank [B]
“F” Level [C]
“L” Level [D]
★If the coolant level is lower than the “L” level, remove the right side cover and the reserve tank cap, then add coolant to the ”F” level.

CAUTION

For refilling, add the specified mixture of coolant and soft water. Adding water alone dilutes the coolant and degrades its anticorrosion properties. The diluted coolant can attack the aluminum engine parts. In an emergency, soft water can be added, but the diluted coolant must be returned to the correct mixture ratio within a few days.
If coolant must be added often or the reserve tank has run completely dry, there is probably leakage in the cooling system. Check the system for leaks.
Coolant ruins painted surfaces. Immediately wash away any coolant that spills on the frame, engine, wheels, or other painted parts.

Downloaded from www.vulcanriders-sweden.org

Periodic Maintenance Procedures

Radiator Hose and Pipe Inspection (Coolant Leak, Damage, Installation Condition)

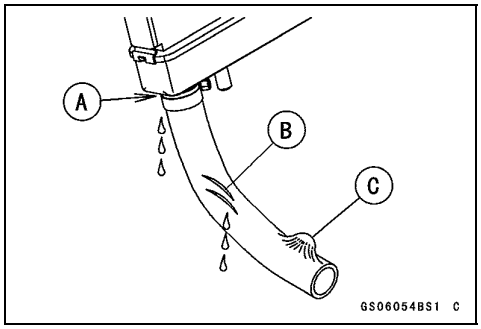

○The high pressure inside the radiator hose can cause coolant to leak [A] or the hose to burst if the line is not properly maintained. Visually inspect the hoses for signs of deterioration. Squeeze the hoses. A hose should not be hard and brittle, nor should it be soft or swollen.

★Replace the hose if any fraying, cracks [B] or bulges [C] are noticed.

● Check that the hoses are securely connected and clamps are tightened correctly.

Torque - Radiator Hose Clamp Screws: 2.0 N·m (0.20 kgf·m, 18 in·lb)

Engine Top End

Air Suction System Damage Inspection

● Remove the fuel tank (see Fuel Tank Removal in the Fuel System (DFI) chapter).

● Separate the air switching valve hose [A] from the right air cleaner housing.



● Connect the following parts temporarily.
Fuel Pump/Fuel Level Sensor Lead Connector [A]
Fuel Hose [B] (see Fuel Tank Installation in the Fuel System (DFI) chapter)

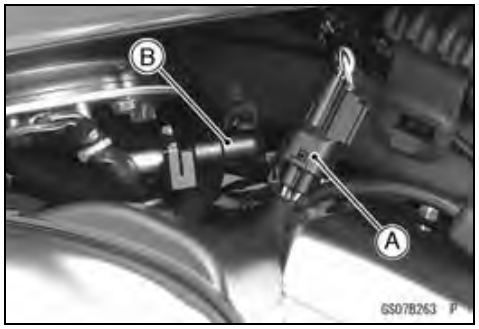

● Start the engine and run it at idle speed.

● Plug the air switching valve hose end [A] with your finger and feel vacuum pulsing in the hose.

★If there is no vacuum pulsation, check the hose line for leak. If there is no leak, check the air switching valve (see Air Switching Valve Unit Test in the Electrical System chapter) or air suction valve (see Air Suction Valve Inspection in the Engine Top End chapter).



Downloaded from www.vulcanriders-sweden.org

Periodic Maintenance Procedures

Clutch

Clutch Operation Inspection

- Start the engine and check that the clutch does not slip and that it releases properly.

★If the clutch operation is insufficiency, inspect the clutch system.

⚠ WARNING

When inspecting by running the vehicle, note a surrounding traffic situation enough in the place of safety.

Clutch Fluid Level Inspection

- Hold the clutch fluid reservoir horizontal.
- Check that the clutch fluid level of the clutch reservoir is between the lower [A] and the upper [B] level lines.

★If the fluid level is lower than the lower level line, fill the reservoir to the upper level line in the reservoir.

○Since the clutch fluid is the same as the brake fluid, refer to the Brake Fluid Level Inspection in this chapter for further details.

Torque - Clutch Reservoir Cap Screws: 1.5 N·m (0.15 kgf·m, 13 in·lb)



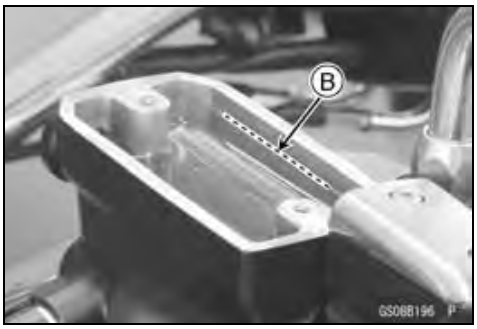

⚠ WARNING

Change the fluid in the clutch line completely if the fluid must be refilled but the type and brand of the fluid that already is in the reservoir are unidentified. After changing the fluid, use only the same type and brand of fluid thereafter. Mixing different types and brands of fluid lowers the fluid boiling point and could cause the clutch to be ineffective. It may also cause the rubber clutch parts to deteriorate.

Clutch Fluid Leak (Clutch Hose and Pipe)

- Apply the clutch lever and inspect the clutch fluid leak from the clutch hose [A], pipe [B] and fitting.

★If the clutch fluid leaked from any position, inspect or replace the problem part.

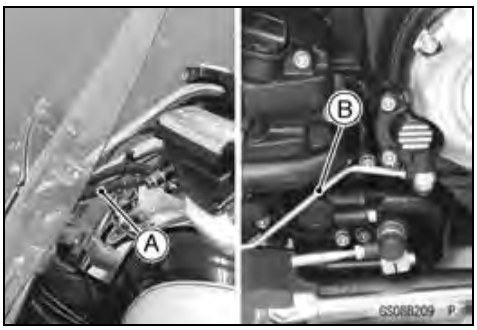

Downloaded from www.vulcanriders-sweden.org

Periodic Maintenance Procedures

Clutch Hose and Pipe Damage and Installation Condition Inspection

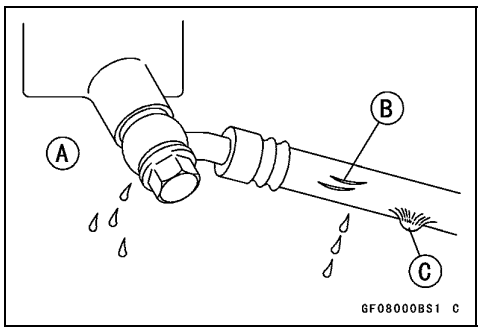

- The high pressure inside the clutch line can cause fluid to leak [A] or the hose to burst if the line is not properly maintained. Bend and twist the rubber hose while examining it.

★Replace it if any fraying, cracks [B] or bulges [C] are noticed.

- Check that the hoses are securely connected and banjo bolts are tightened correctly.

Torque - Clutch Hose Banjo Bolts: 25 N·m (2.5 kgf·m, 18 ft·lb)

- When installing the clutch hose, route the hoses according to Cable, Wire, and Hose Routing section in the Appendix chapter.

★Replace the hose if it has been sharply bent or kinked.

Wheels and Tires

Tire Air Pressure Inspection

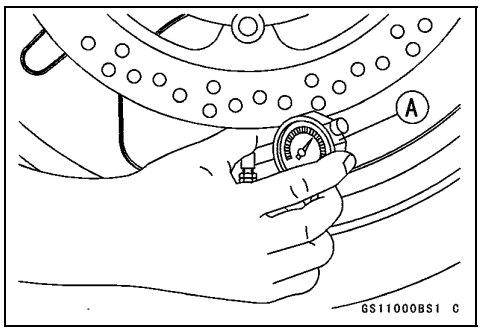

- Remove the air valve cap.
- Measure the tire air pressure with an air pressure gauge [A] when the tires are cold (that is, when the motorcycle has not been ridden more than a mile during the past 3 hours).

★Adjust the tire air pressure according to the specifications if necessary.

Air Pressure (when Cold)

Front: Up to 180 kg (397 lb)
200 kPa (2.00 kgf/cm², 28 psi)

Rear: Up to 97.5 kg (215 lb)
250 kPa (2.50 kgf/cm², 36 psi)
97.5 ~ 180 kg (215 ~ 397 lb)
280 kPa (2.80 kgf/cm², 40psi)

- Install the air valve cap.

Wheel/Tire Damage Inspection

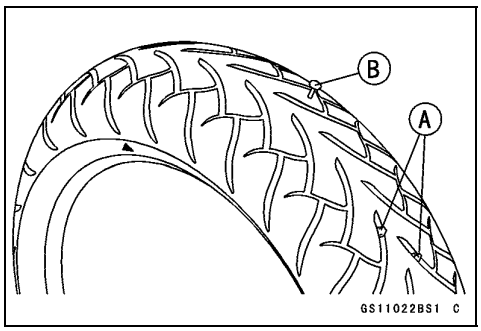

- Remove any imbedded stones [A] or other foreign particles [B] from tread.
- Visually inspect the tire for cracks and cuts, and replace the tire if necessary. Swelling or high spots indicate internal damage, requiring tire replacement.
- Visually inspect the wheel for cracks, cuts and dents damage.

★If any damage is found, replace the wheel if necessary.

Tire Tread Wear Inspection

As the tire tread wears down, the tire becomes more susceptible to puncture and failure. An accepted estimate is that 90% of all tire failures occur during the last 10% of tread life (90% worn). So it is false economy and unsafe to use the tires until they are bald.

Downloaded from www.vulcanriders-sweden.org

Periodic Maintenance Procedures

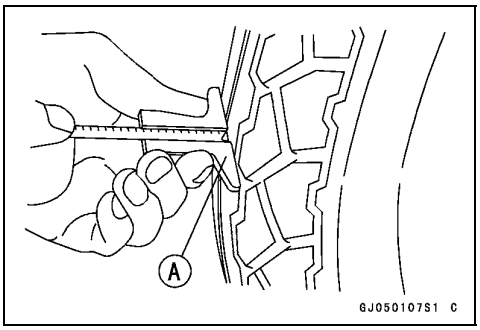

- Measure the tread depth at the center of the tread with a depth gauge [A]. Since the tire may wear unevenly, take measurement at several places.

★If any measurement is less than the service limit, replace the tire (see Tire Removal/Installation in the Wheels/Tires chapter).

Tread Depth

Standard:

Front	**4.3 mm (0.17 in.)**
Rear	**7.2 mm (0.28 in.)**

Service Limit:

Front	**1 mm (0.04 in.)**
	(AT, CH, DE) 1.6 mm (0.06 in.)
Rear	**Up to 130 km/h (80 mph): 2 mm (0.08 in.)**
	Over 130 km/h (80 mph): 3 mm (0.12 in.)

⚠ WARNING

To ensure safe handling and stability, use only the recommended standard tires for replacement, inflated to the standard pressure.

NOTE

○*Most countries may have their own regulations a minimum tire tread depth; be sure to follow them.*

○*Check and balance the wheel when a tire is replaced with a new one.*

Wheel Bearing Damage Inspection



- Raise the front wheel off the ground (see Front Wheel Removal in the Wheels/Tires chapter).
- Turn the handlebar all the way to the right or left.
- Inspect the roughness of the front wheel bearing by pushing and pulling [A] the wheel.
- Spin the front wheel lightly, and check for smoothly turn, roughness, binding or noise.

★If roughness, binding or noise is found, remove the front wheel and inspect the wheel bearing (see Front Wheel Removal, Hub Bearing Inspection in the Wheels/Tires chapter).



- Raise the rear wheel off the ground (see Rear Wheel Removal in the Wheels/Tires chapter).
- Inspect the roughness of the rear wheel bearing by pushing and pulling the wheel to be both side.
- Spin [A] the rear wheel lightly, and check for smoothly turn, roughness, binding or noise.

★If roughness, binding or noise is found, remove the rear wheel and inspect the wheel bearing (see Rear Wheel Removal, Hub Bearing Inspection in the Wheels/Tires chapter) and coupling (see Coupling Bearing Inspection in the Final Drive chapter).

Downloaded from www.vulcanriders-sweden.org

Periodic Maintenance Procedures

Final Drive

Drive Belt Deflection Inspection

NOTE

○*Belt deflection must be checked and adjusted when the belt is cold (at room temperature).*
○*Belt deflection also should be checked at first 1000 km (621.4 mile) ride after belt replacement.*

● Check to see if wheel alignment is properly adjusted.
○The left and right notches [A] on the belt adjusters [B] should point to the same marks or positions [C] on the swingarm.
★If they do not, adjust the wheel alignment (see Wheel Alignment Inspection/Adjustment).

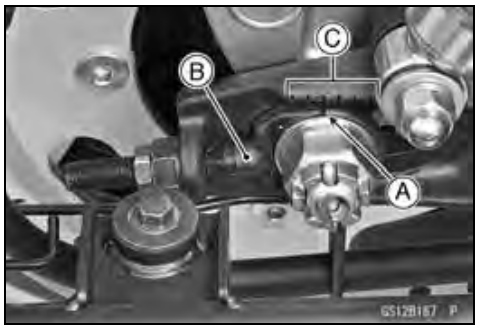

● Raise the rear wheel off the ground (see Rear Wheel Removal in the Wheels/Tires chapter).
● Visually inspect the belt for damage (see Drive Belt Wear and Damage Inspection).
★If the belt is damaged, replace it with a new one.

● Mark the initial belt position [A] on the front of the belt cover [B].
● Using the tension gauge [C], push up the belt at the window [D] of the belt cover with 45 N of force.

Special Tool - Tension Gauge: 57001-1585

● Mark the pushed up belt position [E].
● Measure the deflection (length between mark [E] and [A]) of the belt.
○The length between the mark line (front side and window) of the belt cover is the 5 mm (0.19 in).

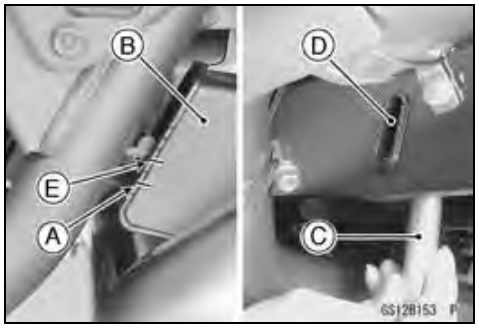

NOTE

○*Push the belt by the gauge until the top surface [A] of the stopper comes to the 45 N loaded scale [B], marked "45N".*
○*Push up on the middle of the belt width. An inaccurate reading will occur if the edge of the belt is pushed up.*
○*Look parallel to the belt during inspection. An inaccurate reading will occur if looking from any other angle.*

● Inspect the belt deflection at two positions by rotating the rear wheel.

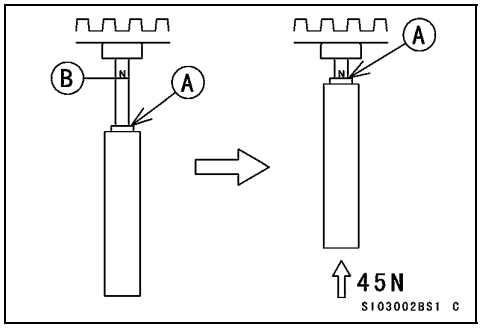

Downloaded from www.vulcanriders-sweden.org

Periodic Maintenance Procedures

● Inspect the drive belt deflection at arbitrary position, and record the value [A].

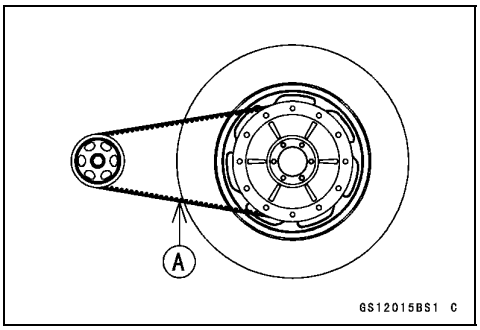

● Turn the rear wheel 90 degrees.

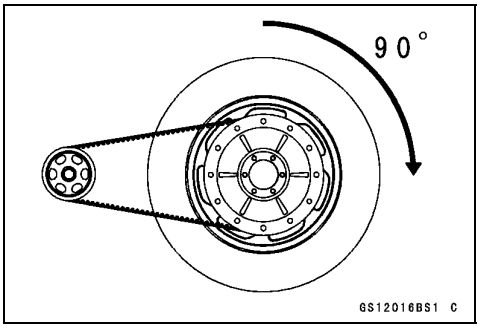

● Inspect the drive belt deflection, and record the value [B].

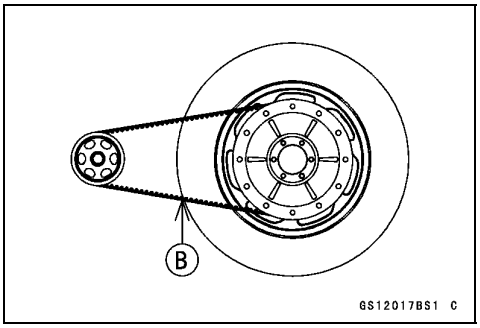

● Decide the belt deflection at the position [C] of one where deflection is large.

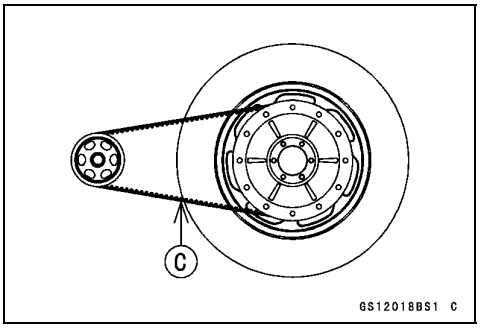

Drive Belt Deflection (with 45 N, 4.6 kgf, 10 lb force)

Standard: 3.0 ~ 4.5 mm (0.12 ~ 0.18 in.)

Drive Belt Deflection (with 45 N, 4.5 kgf, 10 lb force, when installing new belt or engine remounted)

Standard: 3.0 mm (0.12 in.)

★If the deflection is out of the specification, adjust it.

Drive Belt Deflection Adjustment

● Remove:

Saddlebag (see Saddlebag Removal in the Frame chapter)

Downloaded from www.vulcanriders-sweden.org

Periodic Maintenance Procedures

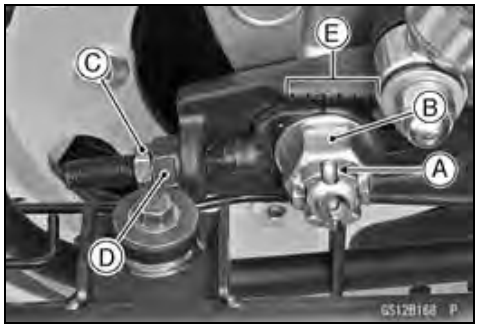

- Remove the axle cotter pin [A], and loosen the axle nut [B].
- Raise the rear wheel off the ground (see Rear Wheel Removal in the Wheels/Tires chapter).
- Loosen the belt adjuster locknuts [C] on the both sides.

★If the belt is too tight, back out the left and right belt adjuster nuts [D], and kick the wheel forward until the belt is too loose.

- Turn in the left and right belt adjuster nuts evenly until the drive belt has the correct amount of deflection.

○To keep the belt and wheel aligned, the notch on the belt adjuster should align with the same swingarm mark [E] that the other side notch aligns with.

- Tighten both belt adjuster locknuts.

⚠ WARNING

Misalignment of the wheel will result in abnormal wear, and may result in an unsafe riding condition. Tighten both belt adjuster locknuts, and make sure the axle stays aligned.

- Tighten the axle nut.

Torque - Rear Axle Nut: 108 N·m (11.0 kgf·m, 80 ft·lb)

- Inspect the drive belt deflection (see Belt Deflection Inspection).

★Readjust if necessary.

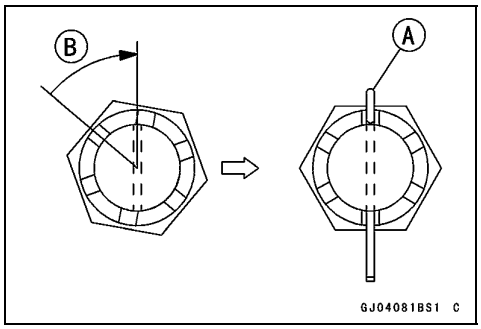

- Insert a new cotter pin [A].

NOTE

○*When inserting the cotter pin, if the slots in the nut do not align with the cotter pin hole in the axle, tighten the nut clockwise [B] up to next alignment.*

○*It should be within 30°.*

○*Loosen once and tighten again when the slot goes past the nearest hole.*

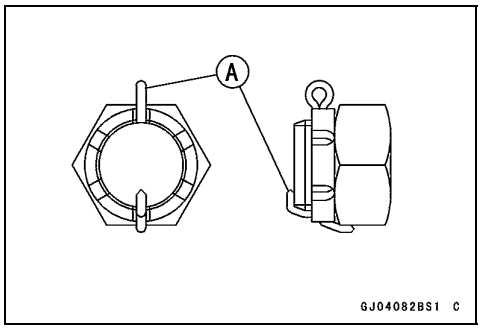

- Bend the cotter pin [A] over the nut.

⚠ WARNING

If the rear axle nut is not securely tightened or the cotter pin is not installed, an unsafe riding condition may result.

- Check the rear brake for weak braking power and brake drag.

Downloaded from www.vulcanriders-sweden.org

Periodic Maintenance Procedures

Wheel Alignment Inspection/Adjustment

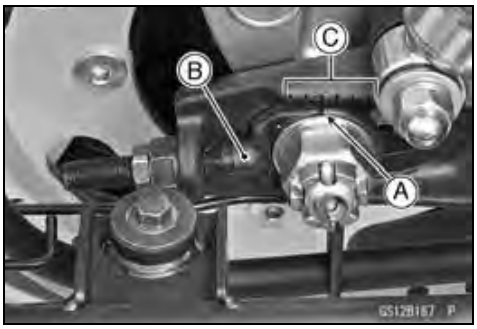

- Check that the notch [A] on the belt adjuster [B] aligns with the same swingarm mark [C] or position that the other side notch aligns with.

★If they do not, adjust the belt deflection (see Belt Deflection Adjustment) and align the wheel alignment.

NOTE

○*Wheel alignment can be also checked using the straightedge or string method.*

⚠ WARNING

Misalignment of the wheel will result in abnormal wear, and may result in an unsafe riding condition.

Drive Belt Wear and Damage Inspection

- Raise the rear wheel off the ground (see Rear Wheel Removal in the Wheels/Tires chapter).
- Remove the left side cover (see Left Side Cover Removal in the Frame chapter).



- Visually inspect the belt [A] for wear and damage.

★If the nylon fabric facing of any portion is worn off, and the polyurethane compound is exposed, or belt is damaged, replace the belt immediately with a new one.

- Otherwise, refer to the Drive Belt Tooth Wear and Damage Patterns and perform the according to the table of Drive Belt Wear and Damage Analysis.

★Whenever the belt is replaced, inspect the engine and rear pulleys (see Pulley Wear Inspection in the Final Drive chapter).

⚠ WARNING

A belt worn past the nylon fabric facing must be replaced. Such a worn belt may cause a serious accident.

Downloaded from www.vulcanriders-sweden.org

Periodic Maintenance Procedures

Drive Belt Tooth Wear and Damage Patterns

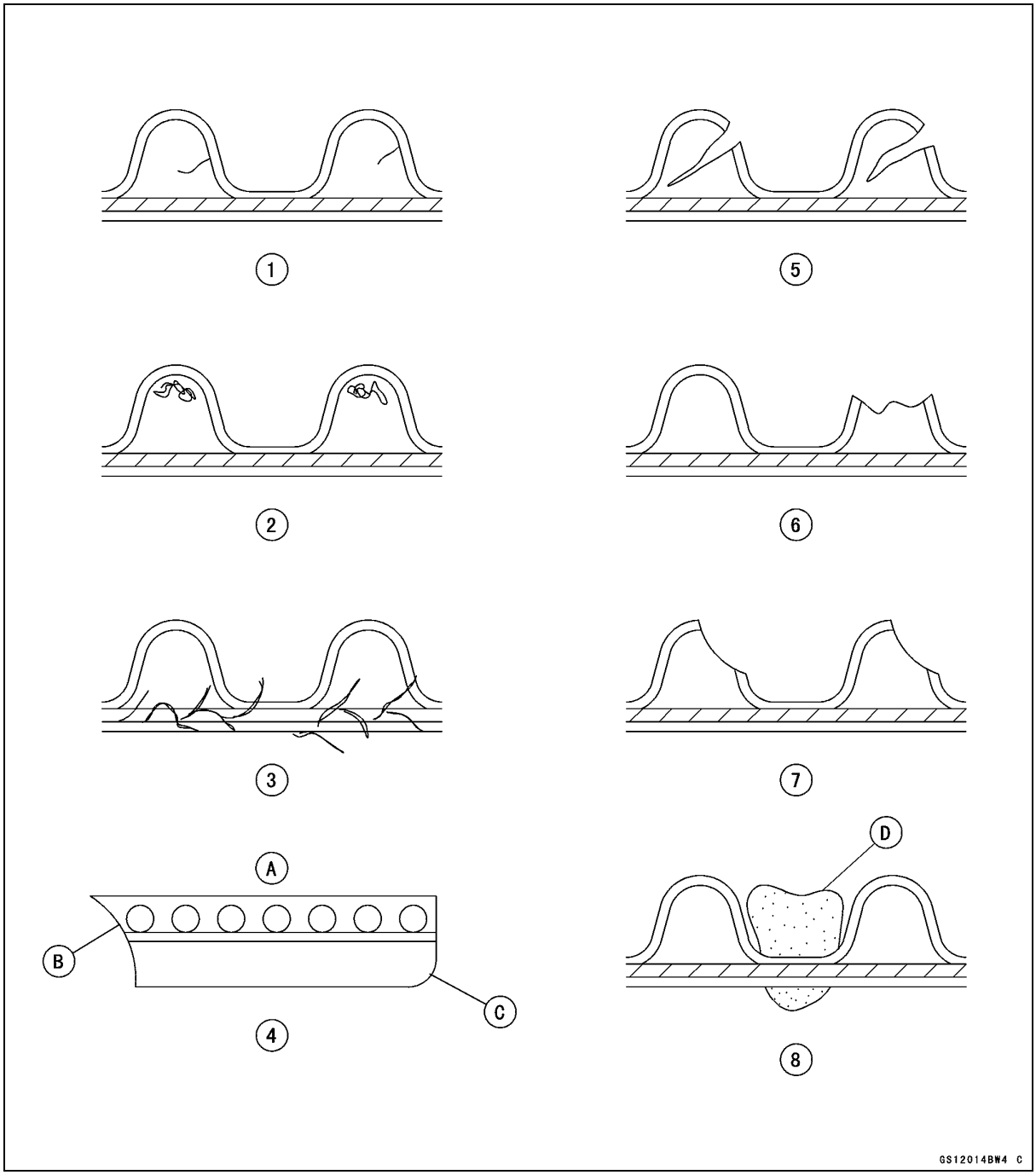

A. Belt Cross Section
B. Edge Bevel Wear
C. Rub Wear
D. Stone

Downloaded from www.vulcanriders-sweden.org

Periodic Maintenance Procedures

Drive Belt Wear and Damage Analysis

Pattern	Condition	Required Action
1	Internal tooth cracks (slight)	O.K. for continued use, but inspect the belt periodically.
2	Scuffing to side of teeth	O.K. for continued use, but inspect the belt periodically. Also check the pulley flange.
3	Fraying edge cord	O.K. for continued use, but inspect the belt periodically (replace the belt if excessive).
4	Beveled wear	O.K. for continued use, check the pulley alignment and flange condition.
5	External tooth cracks (severe)	Replace the drive belt.
6	Severe fractured or missing teeth	Replace the drive belt.
7	Tooth hook wear	Replace the drive belt. Inspect the pulley for wear.
8	Stone damage	Remove stone, O.K. for continued use it not near edge of the belt. Inspect the pulley for damage.

Downloaded from www.vulcanriders-sweden.org

Periodic Maintenance Procedures

Brakes

Brake Fluid Leak (Brake Hose and Pipe) Inspection

- Apply the brake lever or pedal and inspect the brake fluid leak from the brake hoses [A] and fittings [B].

★If the brake fluid leaked from any position, inspect or replace the problem part.

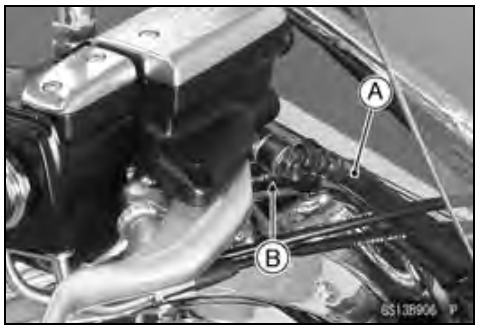

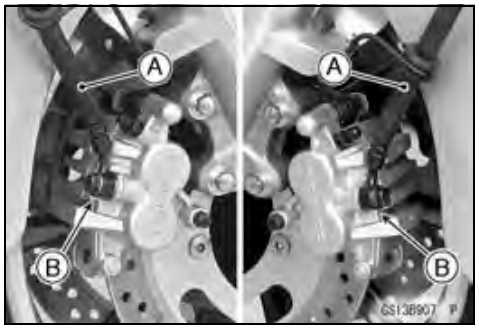

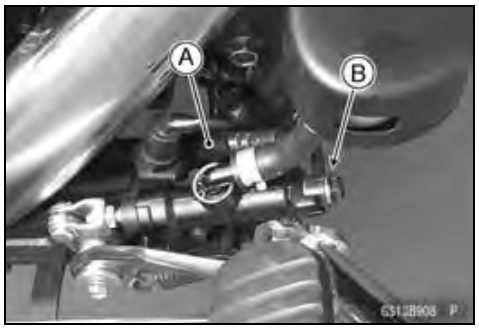

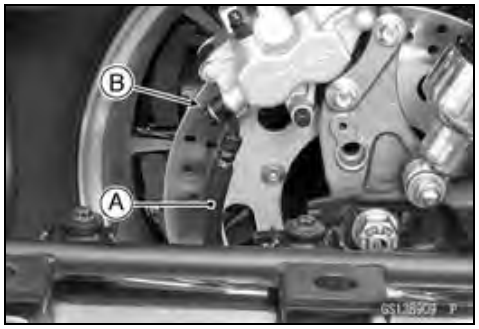

Downloaded from www.vulcanriders-sweden.org

Periodic Maintenance Procedures

Brake Hose and Pipe Damage and Installation Condition Inspection

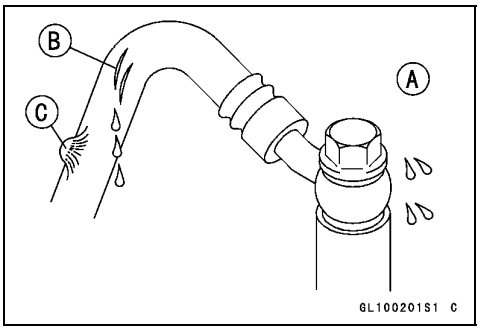

- Inspect the brake hoses and fittings for deterioration, cracks and signs of leakage.

○The high pressure inside the brake line can cause fluid to leak [A] or the hose to burst if the line is not properly maintained. Bend and twist the rubber hose while examining it.

★Replace the hose if any crack [B], bulge [C] or leakage is noticed.

- Tighten any brake hose banjo bolts.

Torque - Brake Hose Banjo Bolts: 25 N·m (2.5 kgf·m, 18 ft·lb)

- Inspect the brake hose routing.

★If any brake hose routing is incorrect, run the brake hose according to Cable, Wire, and Hose Routing section in the Appendix chapter.

Brake Operation Inspection

- Inspect the operation of the front and rear brake by running the vehicle on the dry road.

★If the brake operation is insufficiency, inspect the brake system.

⚠ WARNING

When inspecting by running the vehicle, note a surrounding traffic situation enough in the place of safety.

Brake Fluid Level Inspection

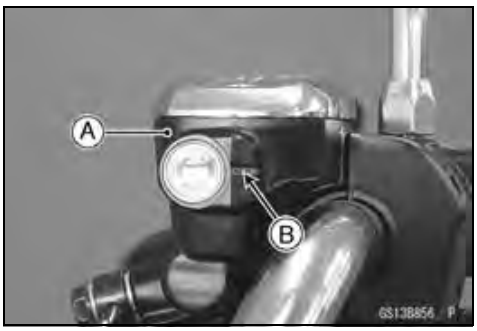

- Check that the brake fluid level in the front brake reservoir [A] is above the lower level line [B].

NOTE

○*Hold the reservoir horizontally by turning the handlebar when checking brake fluid level.*

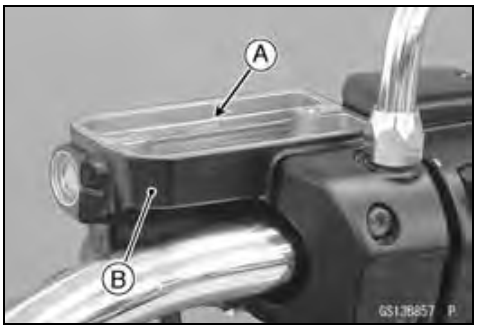

★If the fluid level is lower than the lower level line, fill the reservoir to the upper level line [A] in the reservoir [B].

Downloaded from www.vulcanriders-sweden.org

Periodic Maintenance Procedures

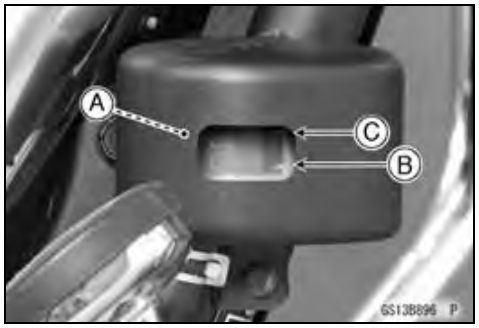

- Check that the brake fluid level in the rear brake reservoir [A] is above the lower level line [B].

★If the fluid level is lower than the lower level line, fill the reservoir to the upper level line [C].

⚠ WARNING

Do not mix two brands of fluid. Change the brake fluid in the brake line completely if the brake fluid must be refilled but the type and brand of the brake fluid that is already in the reservoir are unidentified. After changing the fluid, use only the same type and brand of fluid thereafter.

- Install the front brake reservoir cap, and tighten the screws.

Torque - Front Brake Reservoir Cap Screws: 1.5 N·m (0.15 kgf·m, 13 in·lb)

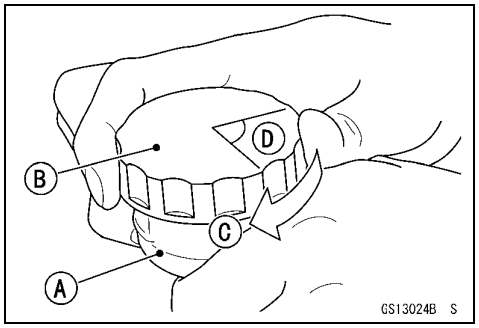

- Follow the procedure below to install the rear brake fluid reservoir cap correctly.

○First, tighten the rear brake fluid reservoir cap [B] clockwise [C] by hand until slight resistance is felt indicating that the cap is seated on the reservoir body, then tighten the cap an additional 1/6 turn [D] while holding the brake reservoir body [A].

Brake Pad Wear Inspection

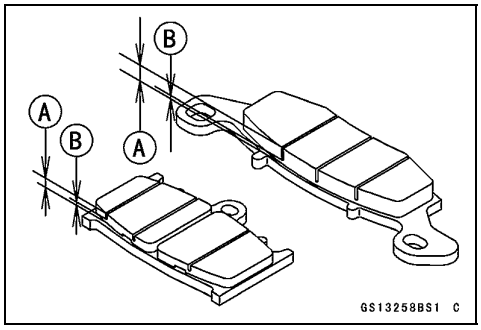

- Remove the brake pads (see Front/Rear Brake Pad Removal in the Brakes chapter).
- Check the lining thickness [A] of the pads in each caliper.

★If the lining thickness of either pad is less than the service limit [B], replace both pads in the caliper as a set.

Pad Lining Thickness

Standard:	
Front	**4.5 mm (0.18 in.)**
Rear	**7.0 mm (0.28 in.)**
Service Limit:	**1 mm (0.04 in.)**

Brake Light Switch Operation Inspection



- Turn on the ignition switch.
- The brake lights [A] should go on when the brake lever is applied or after the brake pedal is depressed about 10 mm (0.39 in.).

Downloaded from www.vulcanriders-sweden.org

Periodic Maintenance Procedures

★If it does not, adjust the brake light switch.
- Remove the front guard mounting bolt [A] and front footboard bracket bolts [B].
- Slide the front guard forward.

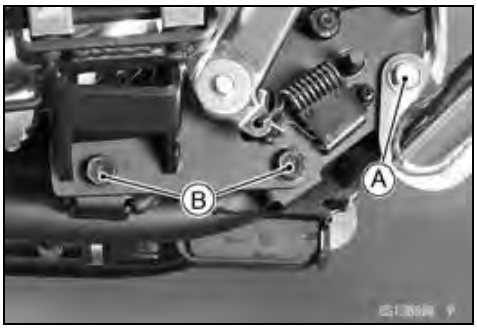

- While holding the switch body, turn the adjusting nut to adjust the switch.
  Switch Body [A]
  Adjusting Nut [B]
  Light sooner as the body rises [C]
  Light later as the body lowers [D]

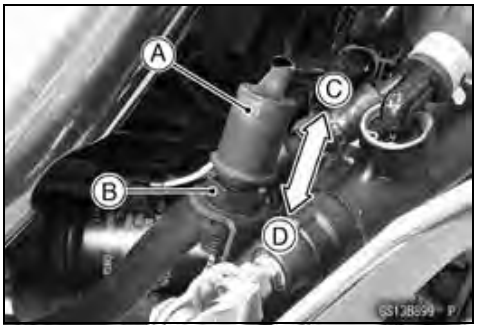

CAUTION

To avoid damaging the electrical connections inside of the switch, be sure that the switch body does not turn during adjustment.

★If it does not go on, inspect or replace the following items.
Battery (see Charging Condition Inspection in the Electrical System chapter)
Brake Light (LED) (see Tail/Brake Light (LED) Removal in the Electrical System chapter)
Main Fuse 30 A and Taillight Fuse 10 A (see Fuse Inspection in the Electrical System chapter)
Front Brake Light Switch [A] (see Switch Inspection in the Electrical System chapter)
Rear Brake Light Switch (see Switch Inspection in the Electrical System chapter)
Harness (see Wiring Inspection in the Electrical System chapter)



Suspension

Front Forks/Rear Shock Absorber Operation Inspection

- Pump the forks down and up [A] 4 or 5 times, and inspect the smooth stroke.

★If the forks does not smoothly or noise is found, inspect the fork oil level or fork clamps (see Front Fork Oil Change in the Suspension chapter).



Downloaded from www.vulcanriders-sweden.org

Periodic Maintenance Procedures

- Pump the rear seat down and up [A] 4 or 5 times, and inspect the smooth stroke.

★If the shock absorber does not smoothly or noise is found, inspect the oil leak (see Rear Shock Absorber Oil Leak Inspection).



Front Fork Oil Leak Inspection

- Visually inspect the front forks [A] for oil leakage.

★Replace or repair any defective parts, if necessary.



Rear Shock Absorber Oil Leak Inspection

- Visually inspect the shock absorber [A] for oil leakage.

★If the oil leakage is found on it, replace the shock absorber with a new one.



Swingarm Pivot Lubrication

- Remove the swingarm (see Swingarm Removal in the Suspension chapter).
- Clean the old grease out of the bearings.
- Apply grease to the inner surface of the needle bearings [A].
- Apply a thin coat of grease to the lips [B] of the grease seals.
- Install the swingarm (see Swingarm Installation in the Suspension chapter).

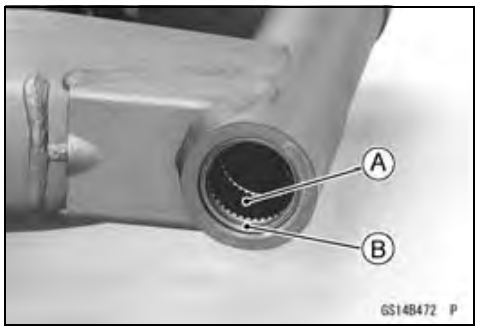

Downloaded from www.vulcanriders-sweden.org

Periodic Maintenance Procedures

Steering

Steering Play Inspection



- Raise the front wheel off the ground (see Front Wheel Removal in the Wheels/Tires chapter).
- With the front wheel pointing straight ahead, alternately tap each end of the handlebar. The front wheel should swing fully left and right from the force of gravity until the fork hits the stop.

★If the wheel binds or catches before the stop, the steering is too tight.

- Feel for steering looseness by pushing and pulling [A] the forks.

★If you feel looseness, the steering is too loose.

NOTE

○*The cables and wiring will have some effect on the motion of the fork which must be taken into account.*
○*Be sure the leads and cables are properly routed.*
○*The bearings must be in good condition and properly lubricated in order for any test to be valid.*

Steering Play Adjustment

- Remove:
  Windshield (see Windshield Removal in the Frame chapter)

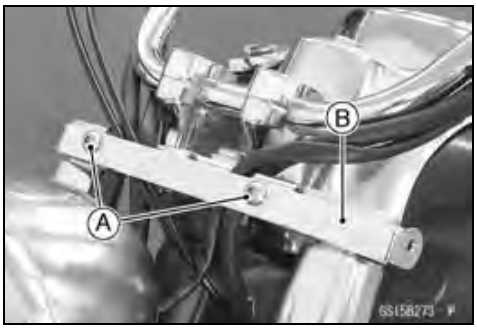

- Remove:
  Bolt [A]
  Holder [B]

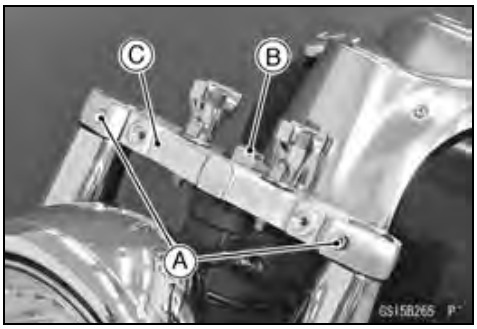

- Remove the handlebar (see Handlebar Removal in the Steering chapter).

CAUTION
Take care not to bend the hoses sharply.

- Loosen the upper front fork clamp bolts [A].
- Remove:
  Steering Stem Head Nut [B] and Washer
  Steering Stem Head [C]

Downloaded from www.vulcanriders-sweden.org

Periodic Maintenance Procedures

● Remove the lock washer [A].



● Adjust the steering using the steering stem nut wrench [A].

Special Tool - Steering Stem Nut Wrench: 57001-1100

★If the steering is too tight, loosen the stem nut [B] a fraction of a turn.

★If the steering is too loose, tighten the stem nut a fraction of a turn.

NOTE

○*Turn the stem nut 1/8 turn at time maximum.*

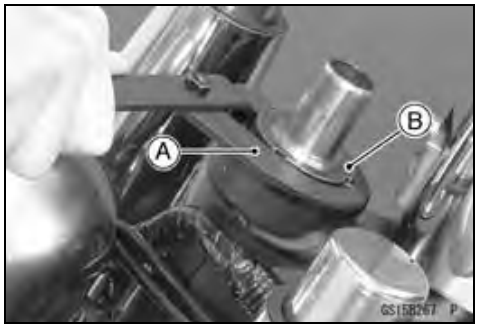

● Fit the claw [A] of the lock washer to the groove [B] of the stem nut.

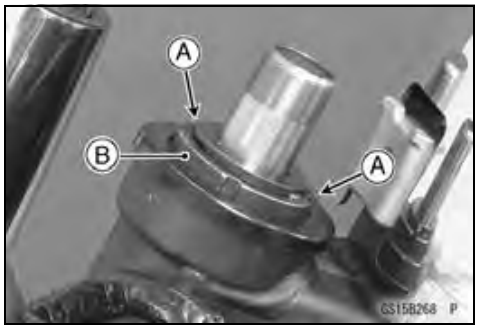

● Install the steering stem head.

● Tighten:

Torque - Steering Stem Head Nut: 108 N·m (11.0 kgf·m, 80 ft·lb)

Upper Front Fork Clamp Bolts: 20 N·m (2.0 kgf·m, 15 ft·lb)

● Install:

Handlebar (see Handlebar Installation in the Steering chapter)

Holder [A]

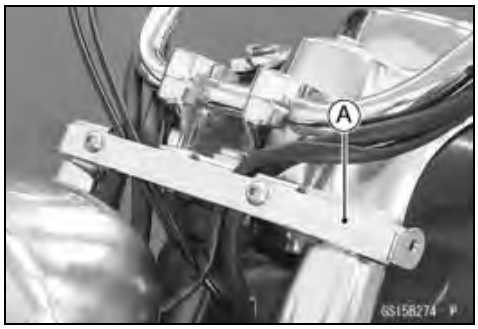

● Check the steering again.

★If the steering is still too tight or loose, repeat the adjustment.

Downloaded from www.vulcanriders-sweden.org

Periodic Maintenance Procedures

Steering Stem Bearing Lubrication

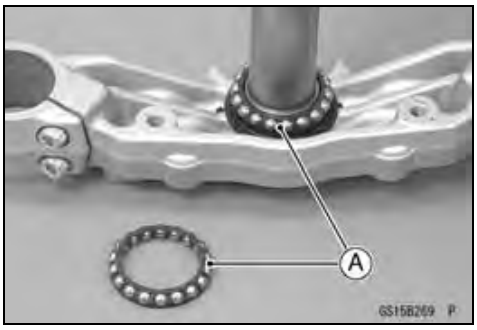

- Remove the steering stem (see Steering, Stem Bearing Removal in the Steering chapter).
- Using a high-flash point solvent, wash the upper and lower ball bearings in the cages, and wipe the upper and lower outer races, which are press-fitted into the frame head pipe, clean off grease and dirt.
- Visually check the outer races and the ball bearings.
- ★Replace the bearing assemblies if they show wear or damage.
- Pack the upper and lower ball bearings [A] in the cages with grease, and apply a light coat of grease to the upper and lower outer races.
- Install the steering stem (see Steering, Stem Bearing Installation in the Steering chapter).
- Adjust the steering (see Steering Play Adjustment).

Electrical System

Spark Plug Condition Inspection

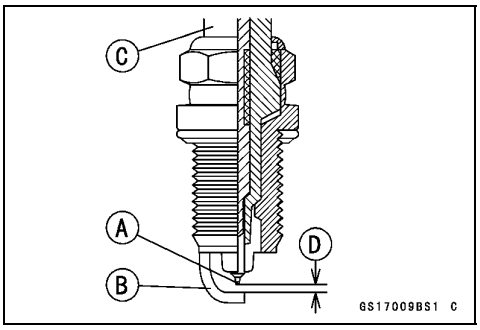

- Remove:
  Spark Plugs (see Spark Plug Removal in the Electrical System chapter)
- Visually inspect the spark plugs.
- ★If the spark plug center electrode [A] and/or side electrode [B] are corroded or damaged, or if the insulator [C] is cracked, replace the plug.
- ★If the spark plug is dirtied or the carbon is accumulated, replace the spark plug.
- Measure the gap [D] with a wire-type thickness gauge.
- ★If the gap is incorrect, replace the spark plug.

Spark Plug Gap: 1.0 ~ 1.1 mm (0.039 ~0.043 in.)

- Use the standard spark plug or its equivalent.

Standard Spark Plug:
Type: NGK ILZKAR7B11

Downloaded from www.vulcanriders-sweden.org

Periodic Maintenance Procedures

Lights and Switches Operation

First Step

- Turn the ignition switch ON.
- The following lights should go on according to below table.

Models	United States	Canada	Europe	Australia
Position Lights (Equipped Models) [A]	go on	go on	–	–
City Light (Equipped Models) [B]	–	–	goes on	–
Fuel Level Warning Indicator Light (LED) [C]	goes on on (for 3 seconds)			
CRUISE Indicator Light (LED) [D]	goes on (for 3 seconds)			
SET Indicator Light (LED) [E]	goes on (for 3 seconds)			
Neutral Indicator Light (LED) [F]	goes on			
Oil Pressure Warning Symbol [G] and Warning Indicator Light (LED) [H]	go on			
Meter Panel LCD [I]	goes on			
Meter Panel Illumination Lights (LED) [J]	go on			
Taillight (LED) [K]	go on			
License Plate Light [L]	goes on			

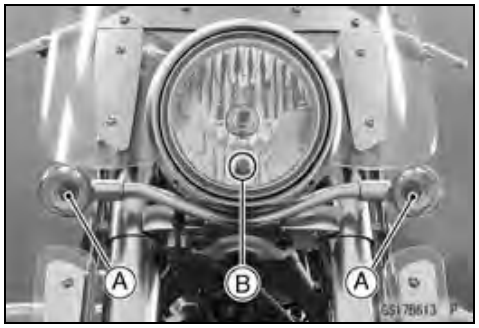

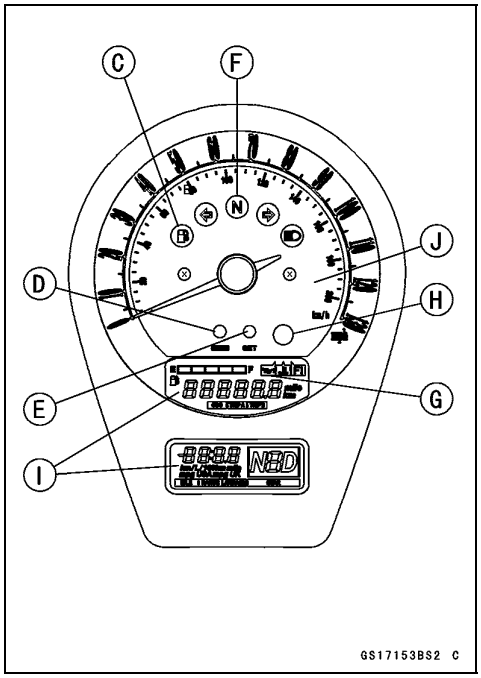

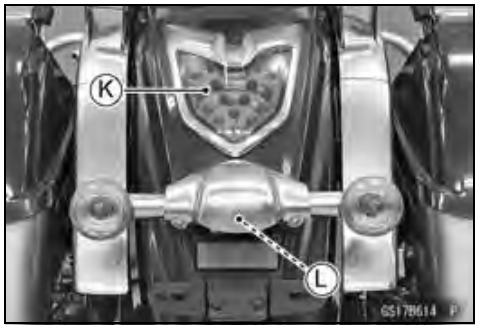

Downloaded from www.vulcanriders-sweden.org

Periodic Maintenance Procedures

★If the light does not go on, inspect or replace the following parts.
Battery (see Charging Condition Inspection in the Electrical System chapter)
Position Light Bulb (see Position Light Bulb Replacement in the Electrical System chapter)
City Light Bulb (see City Light Bulb Replacement in the Electrical System chapter)
Fuel Level Warning Indicator Light (LED) (see Meter Unit Inspection in the Electrical System chapter)
CRUISE Indicator Light (LED) (see Meter Unit Inspection in the Electrical System chapter)
SET Indicator Light (LED) (see Meter Unit Inspection in the Electrical System chapter)
Neutral Indicator Light (LED) (see Meter Unit Inspection in the Electrical System chapter)
Warning Indicator Light (LED) (Oil Pressure Warning) (see Meter Unit Inspection in the Electrical System chapter)
Meter Panel LCD (see Meter Unit Inspection in the Electrical System chapter)
Meter Panel Illumination Light (LED) (see Meter Unit Inspection in the Electrical System chapter)
Tail/Brake Light (LED) (see Taillight (LED) Replacement in the Electrical System chapter)
License Plate Light Bulb (see License Plate Light Bulb Replacement in the Electrical System chapter)
ECU (see ECU Power Supply Inspection in the Fuel System (DFI) chapter)
Main Fuse 30 A and Taillight Fuse 10 A (see Fuse Inspection in the Electrical System chapter)
Ignition Switch (see Switch Inspection in the Electrical System chapter)
Oil Pressure Switch (see Switch Inspection in the Electrical System chapter)
Gear Position Switch (see Gear Position Switch Inspection in the Electrical System chapter)
Harness (see Wiring Inspection in the Electrical System chapter)
● Turn the ignition switch OFF.
● The all lights should go off.
★If the light does not go off, replace the ignition switch.

Downloaded from www.vulcanriders-sweden.org

Periodic Maintenance Procedures

Second Step

- Turn the ignition switch ON.
- Push the turn signal switch [A] ON (left or right position).
- The left or right turn signal lights [B] (front and rear) according to the switch position should flash.
- The turn signal indicator light (LED) [C] in the meter unit should flash.

★If the lights do not flash, inspect or replace the following part.

Turn Signal Light Bulb (see Turn Signal Light Bulb Replacement in the Electrical System chapter)
Turn Signal Indicator Light (LED) (see Meter Unit Inspection in the Electrical System chapter)
Turn Signal Relay Fuse 10 A (see Fuse Inspection in the Electrical System chapter)
Turn Signal Switch (see Switch Inspection in the Electrical System chapter)
Turn Signal Control Relay (see Turn Signal Control Relay Inspection in the Electrical System chapter)
Harness (see Wiring Inspection in the Electrical System chapter)

- Push the turn signal switch.
- The turn signal lights and indicator light (LED) should go off.

★If the light does not go off, inspect or replace the following part.

Turn Signal Switch (see Switch Inspection in the Electrical System chapter)

NOTE

○*Refer to the Electrical System chapter for the automatic turn signal canceling system.*

- Push the hazard button [A].
- The left and right turn signal lights (front and rear) should flash.
- The turn signal indicator lights (LED) in the meter unit should flash.

★If the lights do not flash, inspect or replace the following parts.

Hazard Button (see Switch Inspection in the Electrical System chapter)
Harness (see Wiring Inspection in the Electrical System chapter)

- Push the hazard button.
- The turn signal lights and indicator lights (LED) should go off.

★If the lights do not go off, inspect or replace the following part.

Hazard Button (see Switch Inspection in the Electrical System chapter)

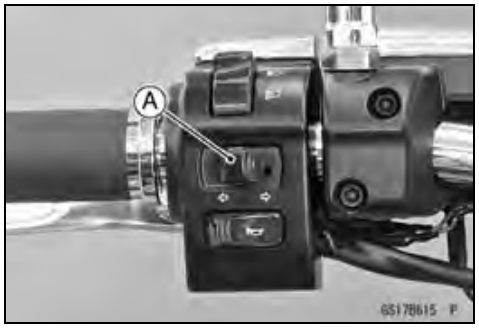



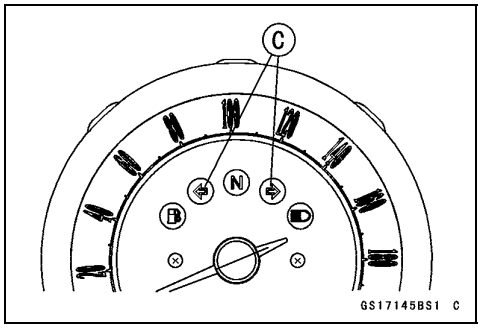

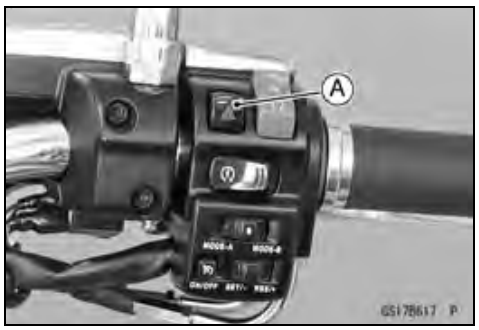

Downloaded from www.vulcanriders-sweden.org

Downloaded from www.vulcanriders-sweden.org

Periodic Maintenance Procedures

Headlight Beam Horizontal Adjustment

● Turn the horizontal adjuster [A] on the headlight with a screwdriver in or out until the beam points straight ahead.
○Turn the adjuster clockwise to face the headlight to the left.
★If the headlight beam points too low or high, adjust the vertical beam.

Headlight Beam Vertical Adjustment

● Turn the vertical adjuster [A] in the headlight in or out with a screwdriver to adjust the headlight vertically.
○Turn the adjuster clockwise to face the headlight to the left.

NOTE

○*On high beam, the brightest points should be slightly below horizontal with the motorcycle on its wheels and the rider seated. Adjust the headlight to the proper angle according to local regulations.*

NOTE

○*For the United States model, the proper angle is 0.4 degrees below horizontal. This is 50 mm (2.0 in.) drop at 7.6 m (25 ft) measured from the center of the headlight with the motorcycle on its wheels and the rider seated.*

50 mm (2.0 in.) [A]
Center of Brightest Spot [B]
7.6 m (25 ft) [C]
Height of Headlight Center [D]

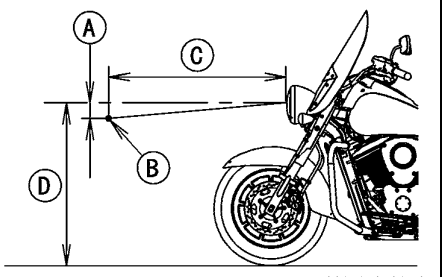

Downloaded from www.vulcanriders-sweden.org

Periodic Maintenance Procedures

Sidestand Switch Operation Inspection

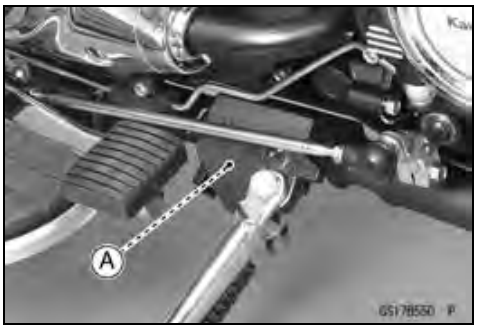

- Raise the rear wheel off the ground with the jack (see Rear Wheel Removal in the Wheels/Tires chapter).
- Inspect the sidestand switch [A] operation accordance to below table.

Sidestand Switch Operation

Side-stand	Gear Position	Clutch Lever	Engine Start	Engine Run
Up	Neutral	Released	Starts	Continue running
Up	Neutral	Pulled in	Starts	Continue running
Up	In Gear	Released	Doesn't start	Continue running
Up	In Gear	Pulled in	Starts	Continue running
Down	Neutral	Released	Starts	Continue running
Down	Neutral	Pulled in	Starts	Continue running
Down	In Gear	Released	Doesn't start	Stops
Down	In Gear	Pulled in	Doesn't start	Stops

★If the sidestand switch operation does not work, inspect or replace the following parts.
Battery (see Charging Condition Inspection in the Electrical System chapter)
Main Fuse 30 A (see Fuse Inspection in the Electrical System chapter)
Ignition Fuse 10 A (see Fuse Inspection in the Electrical System chapter)
Ignition Switch (see Switch Inspection in the Electrical System chapter)
Sidestand Switch (see Switch Inspection in the Electrical System chapter)
Starter Lockout Switch (see Switch Inspection in the Electrical System chapter)
Engine Stop Switch (see Switch Inspection in the Electrical System chapter)
Starter Button (see Switch Inspection in the Electrical System chapter)
Gear Position Switch (see Gear Position Switch Inspection in the Electrical System chapter)
Starter Relay (see Starter Relay Inspection in the Electrical System chapter)
Relay Box (see Relay Circuit Inspection in the Electrical System chapter)
Harness (see Wiring Inspection in the Electrical System chapter)

★If the all parts are good condition, replace the ECU (see ECU Removal/Installation in the Fuel System (DFI) chapter).

Downloaded from www.vulcanriders-sweden.org

Periodic Maintenance Procedures

Engine Stop Switch Operation Inspection

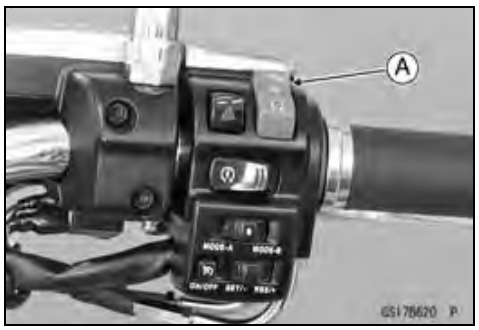

First Step

- Set the gear position in the neutral position.
- Turn the ignition switch ON.
- Push the engine stop switch to stop position [A].
- Push the starter button.
- The engine does not start.

★If the engine starts, inspect or replace the engine stop switch (see Switch Inspection in the Electrical System chapter).



Second Step

- Set the gear position in the neutral position.
- Turn the ignition switch ON.
- Push the engine stop switch to run position [A].
- Push the starter button and start the engine.
- Push the engine stop switch to stop position.
- Immediately the engine should be stop.

★If the engine does not stop, inspect or replace the engine stop switch (see Switch Inspection in the Electrical System chapter).

Others

Chassis Parts Lubrication

- Before lubricating each part, clean off any rusty spots with rust remover and wipe off any grease, oil, dirt, or grime.
- Lubricate the points listed below with indicated lubricant.

NOTE

○*Whenever the vehicle has been operated under wet or rainy conditions, or especially after using a high-pressure water spray, perform the general lubrication*

Pivots: Lubricate with Grease.

Brake Lever
Brake Pedal
Clutch Lever
Rear Master Cylinder Push Rod Joint Pin
Sidestand

Points: Lubricate with Grease.

Throttle Inner Cable Upper and Lower Ends [A]

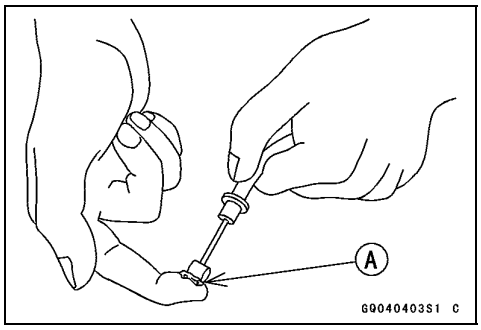

Downloaded from www.vulcanriders-sweden.org

Periodic Maintenance Procedures

Cables: Lubricate with Rust Inhibitor

Throttle Cables

- Lubricate the cables by seeping the oil between the cable and housing.

○The cable may be lubricated by using a commercially available pressure cable lubricator with an aerosol cable lubricant.

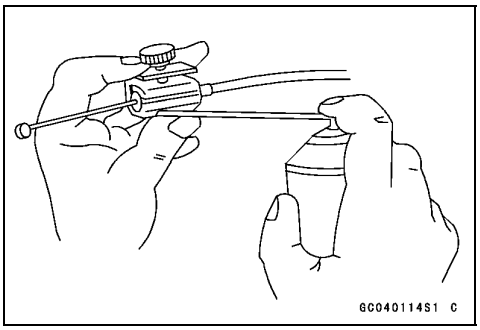

- With the cable disconnected at both ends, the inner cable should move freely [A] within the cable housing.

★If cable movement is not free after lubricating, if the cable is frayed [B], or if the cable housing is kinked [C], replace the cable.

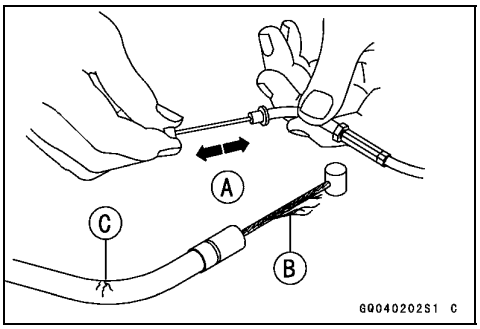

Bolts, Nuts and Fasteners Tightness Inspection

- Check the tightness of the bolts and nuts listed here. Also, check to see that each cotter pin is in place and in good condition.

NOTE

○*For the engine fasteners, check the tightness of them when the engine is cold (at room temperature).*

★If there are loose fasteners, retorque them to the specified torque following the specified tightening sequence. Refer to the appropriate chapter for torque specifications. If torque specifications are not in the appropriate chapter, see the Standard Torque Table. For each fastener, first loosen it by 1/2 turn, then tighten it.

★If cotter pins are damaged, replace them with new ones.

Downloaded from www.vulcanriders-sweden.org

Periodic Maintenance Procedures

Bolt, Nut and Fastener to be checked

Engine:
- Radiator Bolt
- Exhaust Pipe Holder Nuts
- Left and Right Muffler Body Mounting Bolts
- Clutch Lever Pivot Bolt Nut
- Clutch Master Cylinder Clamp Bolts
- Clutch Slave Cylinder Bolts
- Engine Mounting Bolts and Nuts
- Engine Bracket Bolts

Wheels:
- Front Axle Clamp Bolts
- Front Axle
- Rear Axle Nut
- Rear Axle Nut Cotter Pin

Brakes:
- Brake Lever Pivot Bolt and Nut
- Brake Pedal Bolt
- Rear Master Cylinder Push Rod Joint Cotter Pin
- Caliper Mounting Bolts
- Front Master Cylinder Clamp Bolts
- Rear Master Cylinder Mounting Bolts

Suspension:
- Front Fork Clamp Bolts
- Rear Shock Absorber Nuts
- Swingarm Pivot Shaft Nut

Steering:
- Handlebar Clamp Bolts
- Steering Stem Head Nut

Others:
- Front and Rear Footboard Bracket Bolts
- Front and Rear Fender Mounting Bolts
- Sidestand Bolt
- Cross Pipe Bolts
- Downtube Bolts
- Windshield Bolts
- Saddlebag Bolts
- Front and Rear Engine Guard Bolts

Downloaded from www.vulcanriders-sweden.org

Periodic Maintenance Procedures

Replacement Parts

Air Cleaner Element Replacement

NOTE

○In dusty areas, the element should be replaced more frequently than the recommended interval.
○After riding through rain or on muddy roads, the element should be replaced immediately.

⚠ WARNING

If dirt or dust is allowed to pass through into the throttle body assy, the throttle may become stuck, possibly causing an accident.

CAUTION

If dirt gets through into the engine, excessive engine wear and possibly engine damage will occur.

● Remove:
Left Air Cleaner Housing Cover Bolts [A]
Left Air Cleaner Housing Cover [B]



● Remove the air cleaner element bolt [A].
● Discard the air cleaner element [B].

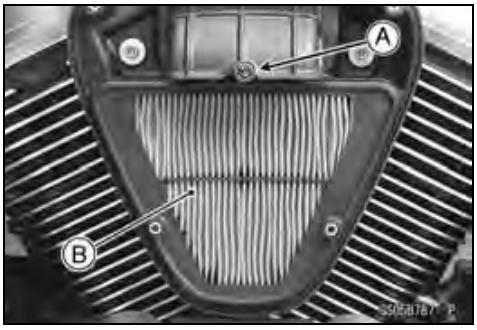

● Install a new element [A] so that the screen side [B] faces inward.

CAUTION

Use only the recommended air cleaner element (Kawasaki part number 11013-0031). Using another air cleaner element will wear the engine prematurely or lower the engine performance.

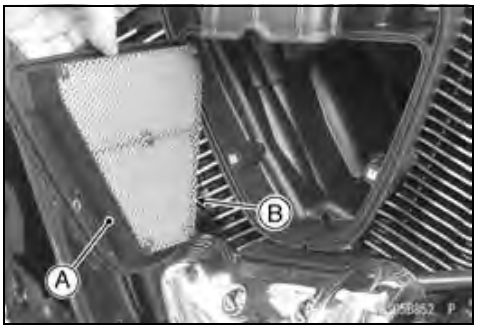

● Tighten:

Torque - Air Cleaner Element Bolt : 4.9 N·m (0.50 kgf·m, 43 in·lb)

Downloaded from www.vulcanriders-sweden.org

Periodic Maintenance Procedures

● Tighten:

Torque - Left Air Cleaner Housing Cover Bolts : 4.9 N·m (0.50 kgf·m, 43 in·lb)

L = 10 mm (0.39 in.) [A]
L = 25 mm (0.98 in.) [B]



Fuel Hose Replacement

● Remove the fuel tank (see Fuel Tank Removal in the Fuel System (DFI) chapter).
● Be sure to place a piece of cloth [A] around the fuel hose joint.
● Insert a thin blade screwdriver [B] into the slit [C] on the joint lock [D].

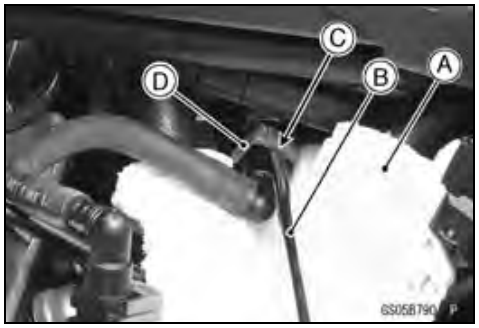

● Turn [A] the driver to disconnect the joint lock [B].
● Pull the fuel hose joint [C] out of the delivery pipe.

⚠ WARNING

Be prepared for fuel spillage; any spilled fuel must be completely wiped up immediately.
When the fuel hose is disconnected, fuel spills out from the hose and the pipe. Cover the hose connection with a clean shop towel to prevent fuel spillage.

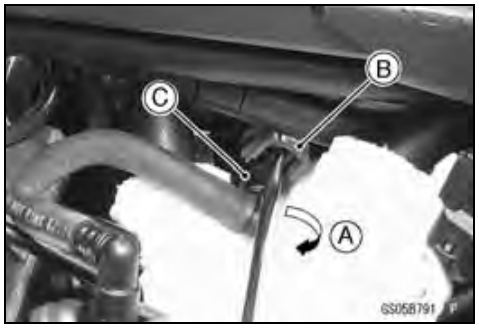

● Replace the fuel hose [A] with a new one.
● Run the fuel hose correctly (see Cable, Wire, and Hose Routing section in the Appendix chapter).
● Insert [B] the fuel hose joint [C] straight onto the delivery pipe until the hose joint clicks.
● Push [D] the joint lock [E].

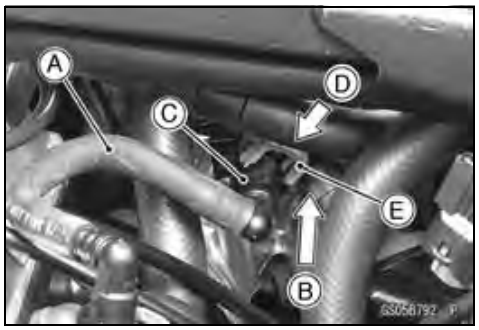

● Push and pull [A] the fuel hose joint [B] back and forth more than two times and make sure it is locked and does not come off.

⚠ WARNING

Make sure the fuel hose joint is installed correctly on the delivery pipe or the fuel could leak.

★If it comes off, reinstall the hose joint.
● Install the fuel tank (see Fuel Tank Installation in the Fuel System (DFI) chapter).
● Start the engine and check the fuel hose for leaks.

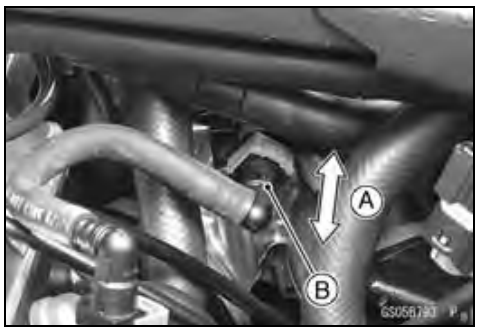

Downloaded from www.vulcanriders-sweden.org

Periodic Maintenance Procedures

Coolant Change

⚠ WARNING

To avoid burns, do not remove the radiator cap or try to change the coolant when the engine is still hot. Wait until it cools down.
Coolant on tires will make them slippery, and can cause an accident and injury.
Since coolant is harmful to the human body, do not use for drinking.

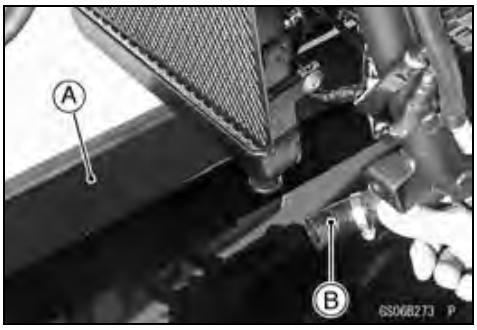

- Remove the cross pipe (see Radiator Removal in the Cooling System chapter).
- Place a container [A] under the radiator, then remove the hose [B] from the radiator.

- Remove the fuel tank (see Fuel Tank Removal in the Fuel System (DFI) chapter).
- Remove the radiator cap [A] in two steps. First turn the cap counterclockwise to the first stop. Then push and turn it further in the same direction and remove the cap.

○The coolant will drain from the radiator and engine.
Front [B]



- Remove:
  Left Side Cover (see Left Side Cover Removal in the Frame chapter)
  Coolant Reserve Tank Bolts [A]
- Remove the cap [B] and poor the coolant into a container.

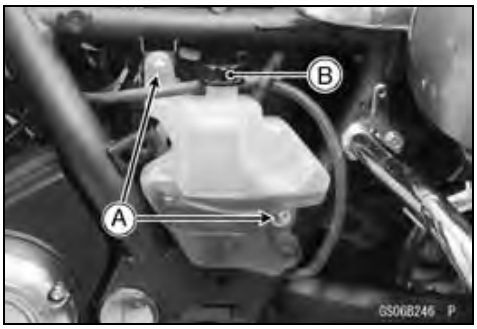

CAUTION

Soft or distilled water must be used with the antifreeze (see Specifications in this chapter) in the cooling system.
If hard water is used in the system, it causes scale accumulation in the water passages, and considerably reduces the efficiency of the cooling system.

Downloaded from www.vulcanriders-sweden.org

Periodic Maintenance Procedures

Water and Coolant Mixture Ratio (Recommended)

Soft Water	**:**	**50%**
Coolant	**:**	**50%**
Freezing Point	**:**	**–35°C (–31°F)**
Total Amount	**:**	**2.4 L (2.5 US qt)**

- Fill the coolant into the radiator.

NOTE

○*Choose a suitable mixture ratio by referring to the coolant manufacturer's directions.*

○*Fill in the coolant slowly so that it can expel the air from the engine and radiator.*

- Check the cooling system for leaks.
- Tap the radiator hoses to force any air bubbles caught inside.
- Fill the radiator up to the filler neck [A] with coolant.
- Install the radiator cap.



- Fill the reserve tank up to the "F" (full) level line [A] with coolant and install the cap.
- Install the fuel tank (see Fuel Tank Installation in the Fuel System (DFI) chapter).
- Start the engine and warm it up thoroughly until the radiator fan turns on and then stop the engine.
- Check the coolant level in the reserve tank several times while the engine is cooling down, and replenish as necessary.

★If the coolant level is lower than the "L" level line, add coolant to the "F" level line.



CAUTION
Do not add more coolant above the "F" level line.

Downloaded from www.vulcanriders-sweden.org

Periodic Maintenance Procedures

Radiator Hose and O-ring Replacement

- Drain the coolant (see Coolant Change).
- Remove:
  Thermostat Housing [A] with Bracket [B] (see Thermostat Removal in the Cooling System chapter)
  Alternator Cover (see Alternator Removal in the Electrical System chapter)
  Left Side Cover (see Left Side Cover Removal in the Frame chapter)
- Replace the hoses [C] and O-rings with new ones.
- Apply grease to the new O-rings [D].
- Apply soap and water solution to the new O-rings [E].
- Run the new hoses according to Cable, Wire and Hose Routing section in the Appendix chapter.
- Tighten the water pipe bolts [F] and radiator hose clamp screws.

Torque - Water Pipe Bolts: 12 N·m (1.2 kgf·m, 106 in·lb)
Radiator Hose Clamp Screws: 2.0 N·m (0.20 kgf·m, 18 in·lb)

- Install the removed parts (see appropriate chapters).
- Fill the coolant (see Coolant Change).
- Check the cooling system for leaks.

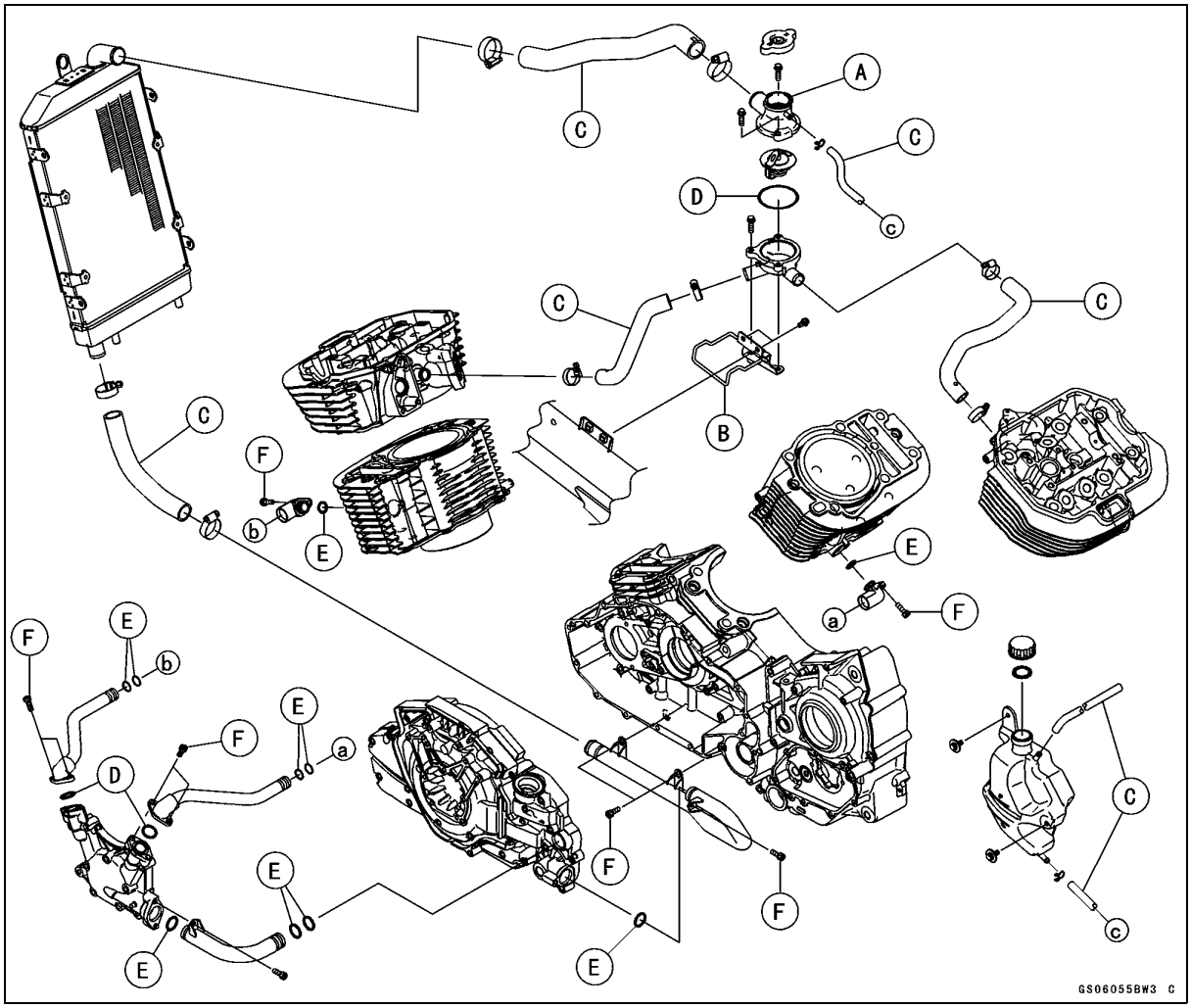

Downloaded from www.vulcanriders-sweden.org

Periodic Maintenance Procedures

Engine Oil Change

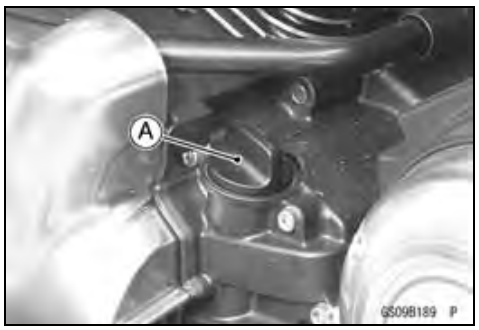

- Situate the motorcycle so that it is vertical after warming up the engine.
- Remove the oil filler cap [A] on the crankcase.

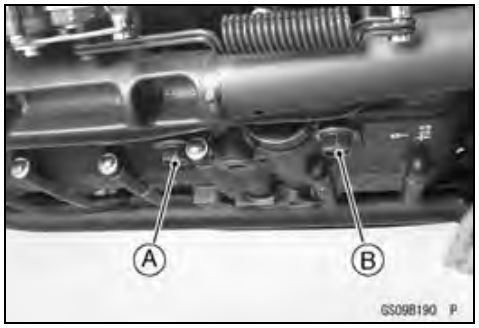

- Remove the front [A] and rear [B] engine oil drain bolts and drain the oil.

○The oil in the filter can be drained by removing the filter (see Oil Filter Replacement).

- Replace the drain bolt gaskets with new ones.
- Tighten the drain bolts.

Torque - Engine Oil Drain Bolts (Front and Rear): 20 N·m (2.0 kgf·m, 14 ft·lb)

Downloaded from www.vulcanriders-sweden.org

Periodic Maintenance Procedures

● Pour in the specified grade and amount of oil.

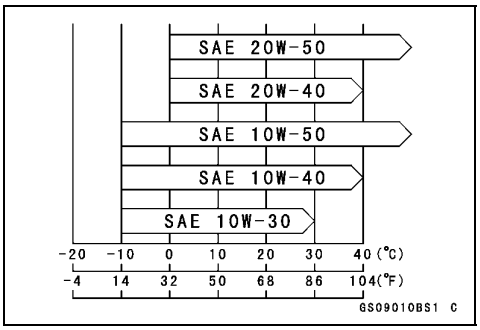

Recommended Engine Oil

Grade: **API SE, SF or SG**
API SH, SJ, SL or SM with JASO MA, MA1, or MA2

Viscosity: **SAE 10W-40**

Amount: **4.1 L (4.3 US qt) (when filter is not removed)**
4.3 L (4.5 US qt) (when filter is removed)
5.0 L (5.3 US qt) (when engine is completely disassembled and dry)

NOTE

○*Do not add any chemical additive to the oil. Oils fulfilling the above requirements are fully formulated and provide adequate lubrication for both the engine and the clutch.*
○*Although 10W-40 engine oil is the recommended oil for most conditions, the oil viscosity may need to be changed to accommodate atmospheric conditions in your riding area.*

● Install the oil filler cap.
● Check the oil level (see Oil Level Inspection in the Engine Lubrication System chapter).

NOTE

○*Because of the semi-dry sump lubrication system, the engine oil level indicated on the dipstick will fluctuate depending on the motorcycle's position and engine speed when the engine is shut off. To ensure a proper reading of the engine oil level, follow the Oil Level Inspection procedures closely.*

Oil Filter Replacement

● Drain the engine oil (see Engine Oil Change in this chapter).
● Remove the oil filter [A] with the oil filter wrench [B] and discard the oil filter.

Special Tool - Oil Filter Wrench: 57001-1249

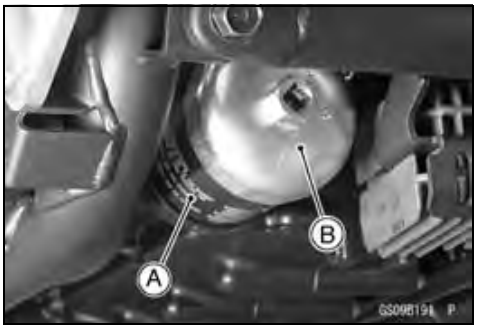

NOTE

○*The filter has an oil filter bypass valve which can not be removed.*

● Replace the oil filter with a new one.
● Apply engine oil to the gasket [A] of the new filter before installation.
● Tighten the filter with the oil filter wrench.

Special Tool - Oil Filter Wrench: 57001-1249

Torque - Oil Filter: 18 N·m (1.8 kgf·m, 13 ft·lb)

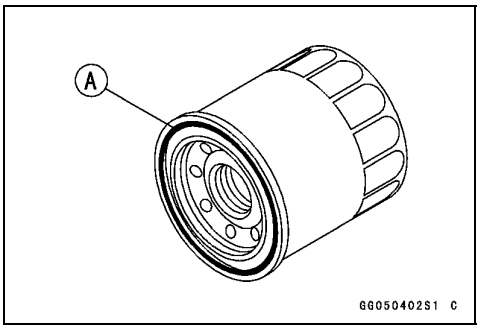

● Pour in the specified grade and amount of oil (see Engine Oil Change in this chapter).

Downloaded from www.vulcanriders-sweden.org

Periodic Maintenance Procedures

Brake Hose and Pipe Replacement

CAUTION

Brake fluid quickly ruins painted plastic surfaces; any spilled fluid should be completely washed away immediately.

- Remove the right saddlebag (see Saddlebag Removal in the Frame chapter).
- Remove the brake hose banjo bolts [A], clamps [B], bolt [C] and grommets [D].
- When removing the brake hose, take care not to spill the brake fluid on the painted or plastic parts.
- When removing the brake hoses [E], temporarily secure the end of the brake hose to some high place to keep fluid loss to a minimum.
- Immediately wash away any brake fluid that spills.

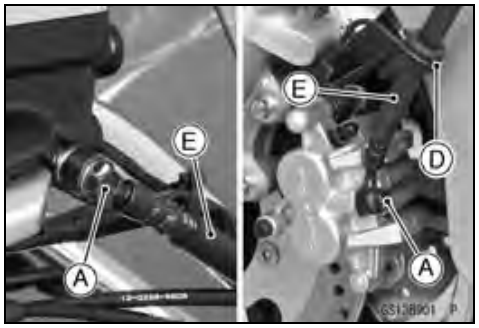



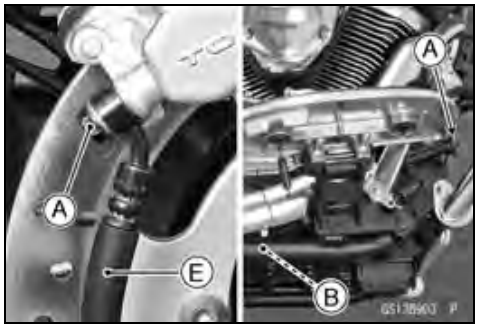

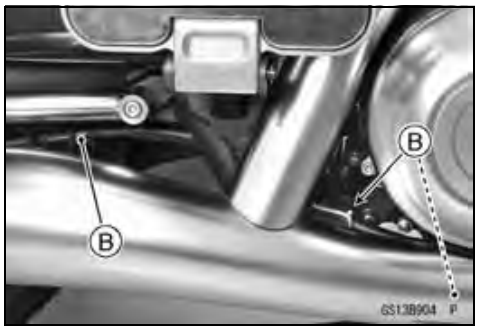

Brake Fluid Change

NOTE

○*The procedure to change the front brake fluid is as follows. Changing the rear brake fluid is the same as for the front brake.*

- Level the brake fluid reservoir.
- Remove:
  Screws [A]
  Reservoir Cap [B]
  Diaphragm Plate [C]
  Diaphragm [D]
  Protector [E]

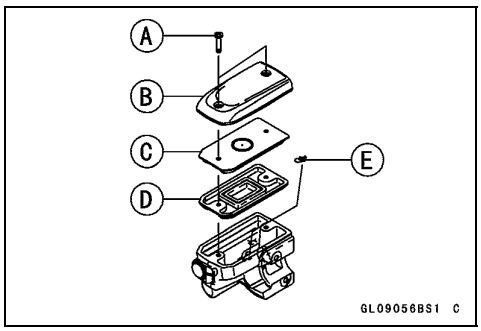

Downloaded from www.vulcanriders-sweden.org

Periodic Maintenance Procedures

● Remove the rubber cap from the bleed valve [A] on the caliper [B].
● Attach a clear plastic hose [C] to the bleed valve, and run the other end of the hose into a container.
● Fill the reservoir with fresh specified brake fluid.

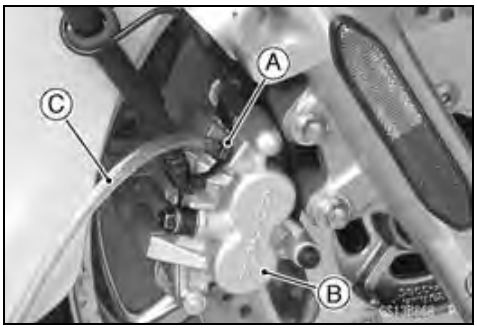

NOTE

○*For the rear brake caliper [A], change the brake fluid for two bleed valves [B].*

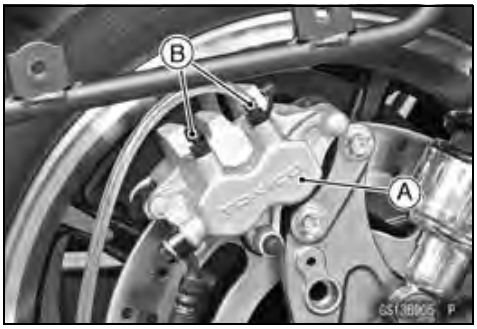

● Change the brake fluid as follows.
○Repeat this operation until fresh brake fluid comes out from the plastic hose or the color of the fluid changes.
1. Open the bleed valve [A].
2. Apply the brake and hold it [B].
3. Close the bleed valve [C].
4. Release the brake [D].

NOTE

○*The fluid level must be checked often during the changing operation and replenished with fresh brake fluid. If the fluid in the reservoir runs out any time during the changing operation, the brakes will need to be bled since air will have entered the brake line.*
○*Front Brake: Repeat the above steps for the other caliper.*

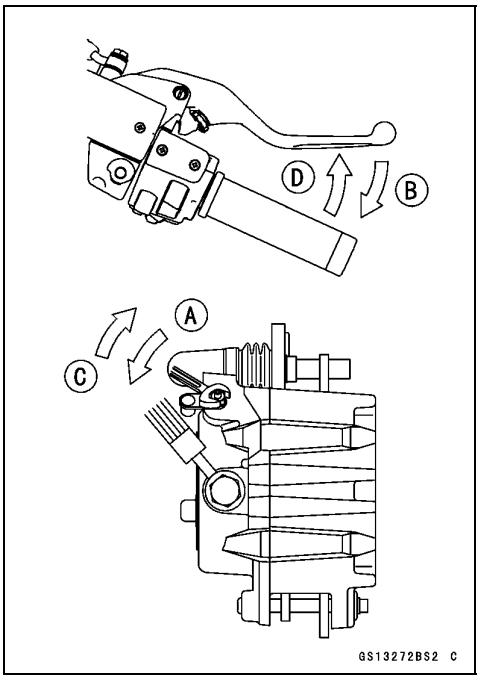

● Remove the clear plastic hose.
● Install:
Protector
Diaphragm
Diaphragm Plate
Reservoir Cap
● Tighten:

Torque - Front Brake Reservoir Cap Screws: 1.5 N·m (0.15 kgf·m, 13 in·lb)

● Tighten the bleed valves, and install the rubber caps.

Torque - Bleed Valves: 7.8 N·m (0.80 kgf·m, 69 in·lb)

Downloaded from www.vulcanriders-sweden.org

Periodic Maintenance Procedures

● Follow the procedure below to install the rear brake fluid reservoir cap correctly.

○First, tighten the rear brake fluid reservoir cap [B] clockwise [C] by hand until slight resistance is felt indicating that the cap is seated on the reservoir body, then tighten the cap an additional 1/6 turn [D] while holding the brake fluid reservoir body [A].

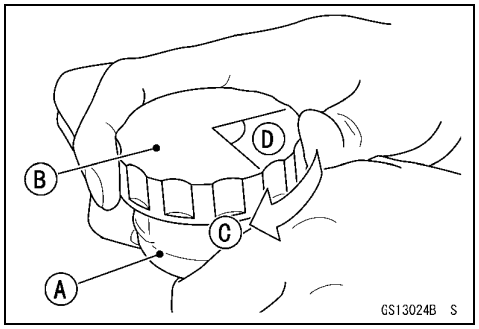

● After changing the fluid, check the brake for good braking power, no brake drag, and no fluid leakage.

★If necessary, bleed the air from the lines.

Master Cylinder Rubber Parts Replacement

Front Master Cylinder Disassembly

● Remove the front master cylinder (see Front Master Cylinder Removal in the Brakes chapter).

● Remove the reservoir cap [A], plate [B] and diaphragm [C].

● Unscrew the locknut [D] and pivot bolt [E], and remove the brake lever.

● Pull the dust cover [F] out of place, and remove the circlip [G].

Special Tool - Inside Circlip Pliers: 57001-143

● Pull out the piston assy [H].

CAUTION
Do not remove the secondary cup from the piston since removal will damage it.

● Replace:
Piston Assy
Circlip
Dust Cover
Diaphragm

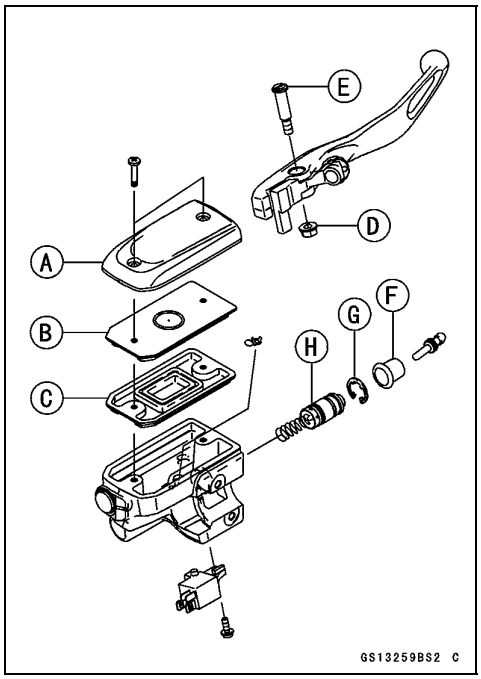

Downloaded from www.vulcanriders-sweden.org

Periodic Maintenance Procedures

Rear Master Cylinder Disassembly

- Remove the rear master cylinder (see Rear Master Cylinder Removal in the Brakes chapter).
- Remove the reservoir cap [A], plate [B] and diaphragm [C].
- Remove the circlip [D], connector [E] and O-ring [F].

Special Tool - Inside Circlip Pliers: 57001-143

- Slide the dust cover [G] out of place, and remove the circlip [H].
- Pull out the push rod assy [I].
- Take off the piston assy [J] and return spring [K].

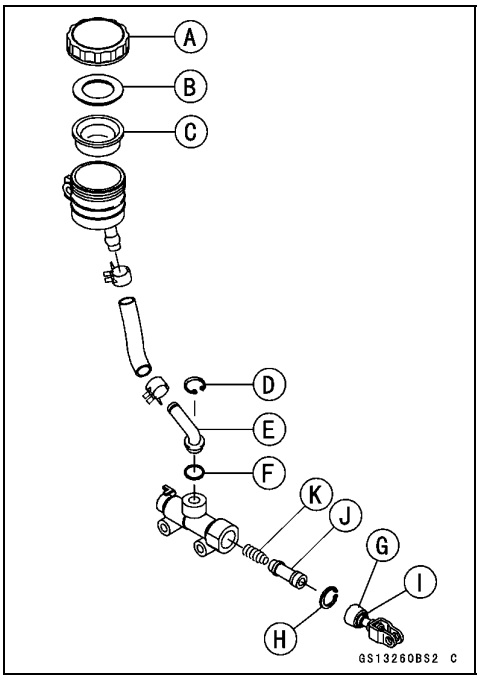

CAUTION

Do not remove the secondary cup from the piston since removal will damage it.

- Replace:
  Diaphragm
  Circlip
  O-ring
  Circlip
  Push Rod Assy
  Piston Assy

Master Cylinder Assembly

- Before assembly, clean all parts including the master cylinder with brake fluid or alcohol.

CAUTION

Except for the disc pads and disc, use only disc brake fluid, isopropyl alcohol, or ethyl alcohol for cleaning brake parts. Do not use any other fluid for cleaning these parts. Gasoline, engine oil, or any other petroleum distillate will cause deterioration of the rubber parts. Oil spilled on any part will be difficult to wash off completely, and will eventually deteriorate the rubber used in the disc brake.

- Apply brake fluid to the new parts and to the inner wall of the cylinder.
- Take care not to scratch the piston or the inner wall of the cylinder.

- Apply silicone grease.
  Brake Lever Pivot Bolt
  Brake Lever Pivot Contact
  Push Rod Contact
  Dust Cover
- Tighten the brake lever pivot bolt and the locknut.

Torque - Brake Lever Pivot Bolt: 1.0 N·m (0.10 kgf·m, 8.9 in·lb)
Brake Lever Pivot Bolt Locknut: 5.9 N·m (0.60 kgf·m, 52 in·lb)

Downloaded from www.vulcanriders-sweden.org

Periodic Maintenance Procedures

Caliper Rubber Parts Replacement

Front Caliper Disassembly

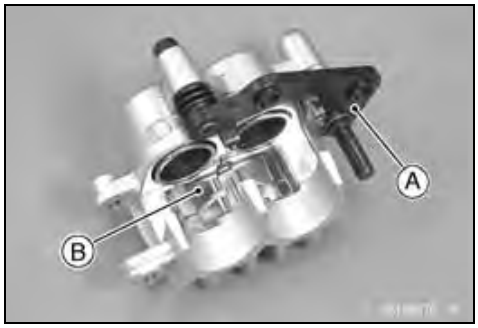

- Remove:
  Front Caliper (see Front Caliper Removal in the Brakes chapter)
  Front Brake Pads (see Front Brake Pad Removal in the Brakes chapter)
  Caliper Holder [A]
  Pad Spring [B]

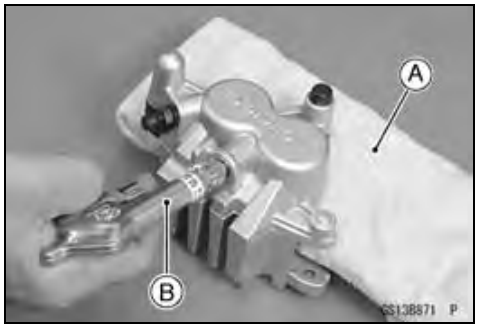

- Using compressed air, remove the pistons. One way to remove the pistons is as follows.

○Cover the caliper opening with a clean, heavy cloth [A].
○Remove the piston by lightly applying compressed air [B] to where the brake line fits into the caliper.

⚠ WARNING

To avoid serious injury, never place your fingers or palm inside the caliper opening. If you apply compressed air into the caliper, the piston may crush your hand or fingers.

○Pull out the pistons by hand.

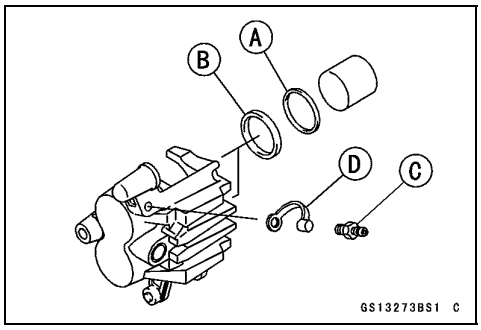

- Remove the dust seals [A] and fluid seals [B].
- Remove the bleed valve [C] and rubber cap [D].

NOTE

○*If compressed air is not available, do as follows with the brake hose connected to the caliper.*
○*Prepare a container for brake fluid, and perform the work above it.*
○*Remove the brake pads (see Front Brake Pad Removal in the Brakes chapter).*
○*Pump the brake pedal to remove the caliper piston.*

Front Caliper Assembly

- Clean the caliper parts except for the pads.

CAUTION

For cleaning the parts, use only disc brake fluid, isopropyl alcohol, or ethyl alcohol.

- Install the bleed valves and rubber caps.

Torque - Bleed Valves: 7.8 N·m (0.80 kgf·m, 69 in·lb)

Downloaded from www.vulcanriders-sweden.org

Periodic Maintenance Procedures

● Replace the fluid seals [A] with new ones.
○Apply silicone grease to the fluid seals, and install them into the cylinders by hand.
● Replace the dust seals [B] with new ones.
○Apply silicone grease to the dust seals, and install them into the cylinders by hand.

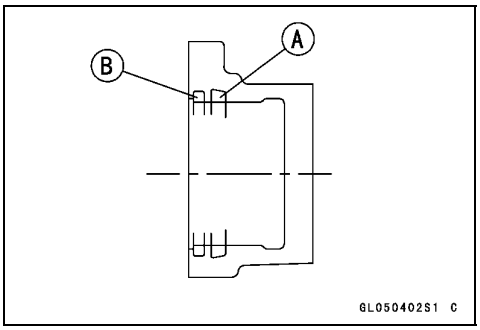

● Apply brake fluid to the outside of the pistons, and push them into each cylinder by hand.
● Replace the friction boot [A] and dust boot [B] with new ones.
● Apply silicone grease to the sliding surface of the caliper holder shafts [C].
● Check that the guide [D] is in place on the caliper holder.

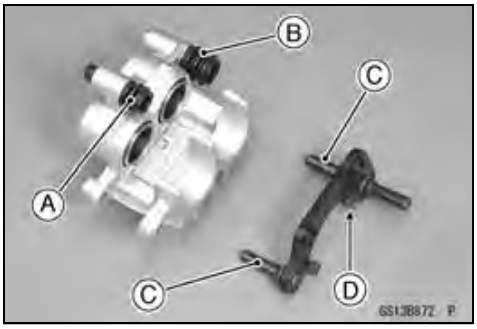

● Install the pad spring [A] on the caliper as shown in the figure.
● Install the brake pads (see Front Brake Pad Installation in the Brakes chapter).
● Wipe up any spilled brake fluid on the caliper with wet cloth.

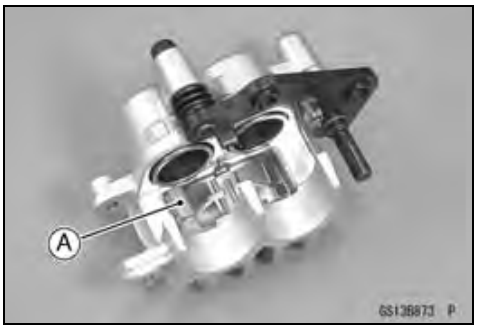

Rear Caliper Disassembly

● Remove:
Rear Caliper (see Rear Caliper Removal in the Brakes chapter)
Rear Brake Pads (see Rear Brake Pad Removal in the Brakes chapter)
Caliper Holder [A]
Pad Spring [B]

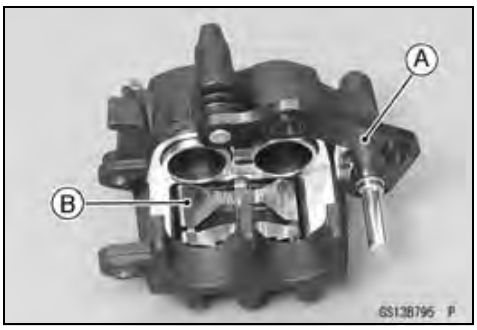

● Using compressed air, remove the pistons. One way to remove the pistons is as follows.
○Cover the caliper opening with a clean, heavy cloth [A].
○Remove the piston by lightly applying compressed air [B] to where the brake line fits into the caliper.

⚠ WARNING

To avoid serious injury, never place your fingers or palm inside the caliper opening. If you apply compressed air into the caliper, the piston may crush your hand or fingers.



Downloaded from www.vulcanriders-sweden.org

Periodic Maintenance Procedures

○Pull out the pistons by hand.
● Remove the dust seals [A] and fluid seals [B].
● Remove the bleed valves [C] and rubber caps [D].

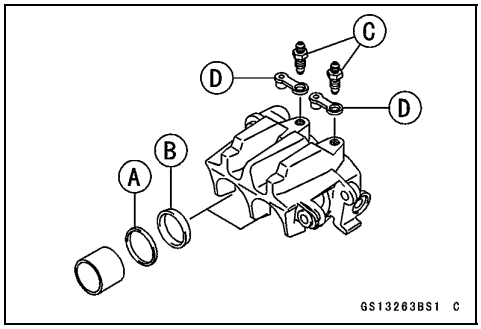

NOTE

○*If compressed air is not available, do as follows with the brake hose connected to the caliper.*
○*Prepare a container for brake fluid, and perform the work above it.*
○*Remove the brake pads (see Rear Brake Pad Removal in the Brakes chapter).*
○*Pump the brake pedal to remove the caliper piston.*

Rear Caliper Assembly

● Clean the caliper parts except for the pads.

CAUTION

For cleaning the parts, use only disc brake fluid, isopropyl alcohol, or ethyl alcohol.

● Install the bleed valves and rubber caps.

Torque - Bleed Valves: 7.8 N·m (0.80 kgf·m, 69 in·lb)

● Replace the fluid seals [A] with new ones.
○Apply silicone grease to the fluid seals, and install them into the cylinders by hand.
● Replace the dust seals [B] with new ones.
○Apply silicone grease to the dust seals, and install them into the cylinders by hand.

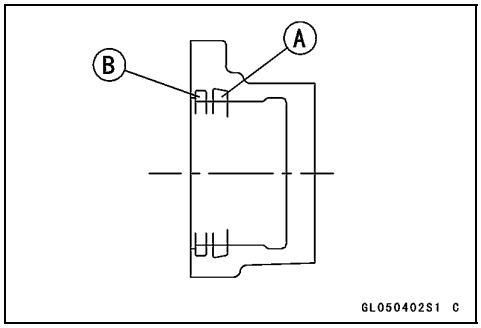

● Apply brake fluid to the outside of the pistons, and push them into each cylinder by hand .
● Replace the friction boot [A] and dust boot [B] with new ones.
● Apply silicone grease to the sliding surface of the caliper holder shafts [C].
● Check that the guide [D] is in place on the caliper holder.

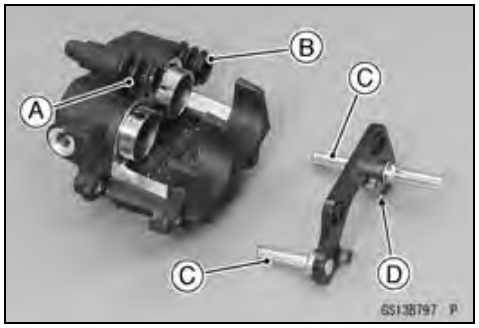

● Install the pad spring [A] on the caliper as shown in the figure.
● Install the brake pads (see Rear Brake Pad Installation in the Brakes chapter).
● Wipe up any spilled brake fluid on the caliper with wet cloth.

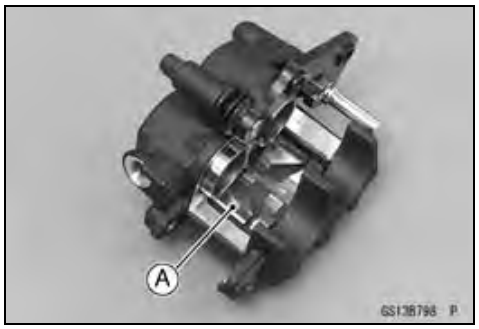

Downloaded from www.vulcanriders-sweden.org

Periodic Maintenance Procedures

Clutch Hose and Pipe Replacement

CAUTION

Clutch fluid quickly ruins painted plastic surfaces; any spilled fluid should be completely washed away immediately.

- When removing the clutch hose, take care not to spill the clutch fluid on the painted or plastic parts.

- Remove:
  Front Footboard Left (see Front Footboard Removal/Installation)
  Banjo Bolt [A] and washers
  Clamp [B]



- Remove the banjo bolt [A] and washers.
- Pull out the damper [B] outward.



- Open the clamps [A]
- Pull out the clutch hose [B] from the holder [C].

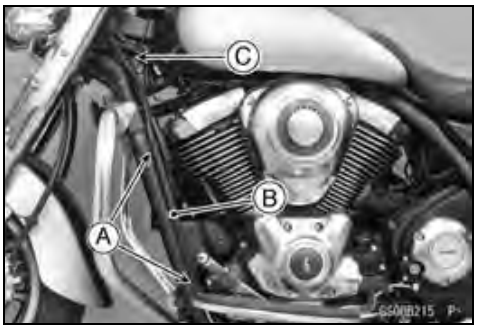

- Immediately wash away any clutch fluid that spills.
- There are washers on each side of the clutch hose fittings. Replace them with new ones when installing.
- Tighten:

  Torque - Clutch Hose Banjo Bolts: 25 N·m (2.5 kgf·m, 18 ft·lb)

- When installing the hoses, avoid sharp bending, kinking, flatting or twisting, and route the hoses according to Cable, Wire, and Hose Routing section in Appendix chapter.
- Fill the clutch line after installing the clutch hose (see Clutch Fluid Change).

Downloaded from www.vulcanriders-sweden.org

Periodic Maintenance Procedures

Clutch Fluid Change

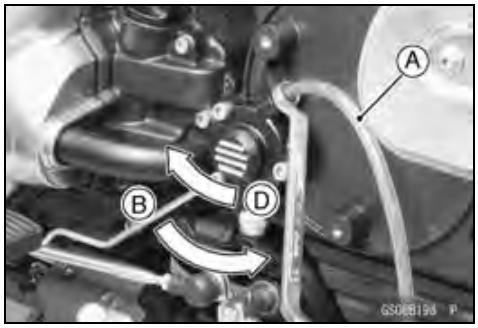



- Level the clutch fluid reservoir and remove the reservoir cap.
- Remove the engine pulley outer cover (see Engine Pulley Outer Cover Removal in the Final Drive chapter.) and the rubber cap from the bleed valve on the clutch slave cylinder.
- Attach a clear plastic hose [A] to the bleed valve and run the other end of the hose into a container.
- Fill the reservoir with fresh fluid.
- Change the clutch fluid as follows.

○Repeat this operation until fresh fluid comes out from the plastic hose or the color of the fluid changes.

1. Open [B] the bleed valve, using a wrench.
2. Pump the clutch lever and hold [C] it.
3. Close [D] the bleed valve.
4. Release [E] the clutch lever.

NOTE

○*The fluid level must be checked often during the charging operation and replenihed with fresh fluid. If the fluid in the reservoir runs completely out any time during fluid changing, the bleeding operation must be done over again from the beginning since air will have entered the line.*

⚠ WARNING

Do not mix two brands of fluid.

- After changing the fluid, check the clutch for good clutch power and no fluid leakage.

★If necessary, bleed the air from the lines (see Clutch Line Bleeding in the Clutch chapter).

- Remove the clear plastic hose.
- Install the reservoir cap.
- Tighten the bleed valve, and install the rubber cap.

Torque - Clutch Reservoir Cap Screws: 1.5 N·m (0.15 kgf·m, 13 in·lb)
Clutch Slave Cylinder Bleed Valve: 7.8 N·m (0.80 kgf·m, 69 in·lb)

Downloaded from www.vulcanriders-sweden.org

Periodic Maintenance Procedures

Clutch Master Cylinder Rubber Parts Replacement

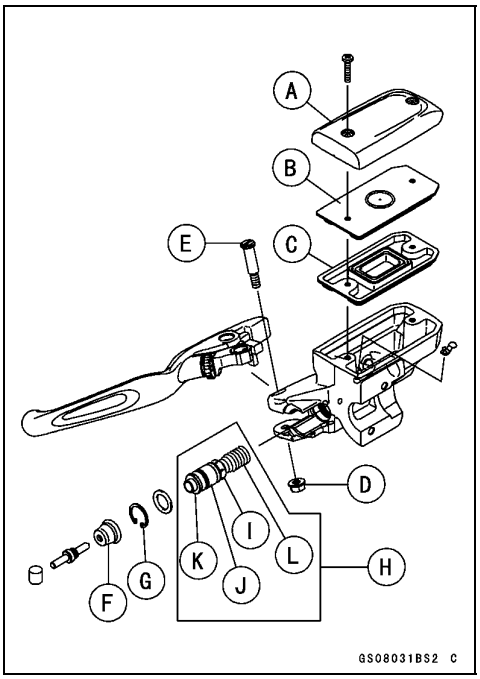

- Remove the clutch master cylinder (see Clutch Master Cylinder Removal in the Clutch chapter).
- Remove the reservoir cap [A], plate [B] and diaphragm [C], and pour the clutch fluid into a container.
- Unscrew the locknut [D] and pivot bolt [E], and remove the clutch lever.
- Pull the dust cover [F] out of place, and remove the circlip [G].

Special Tool - Inside Circlip Pliers: 57001-143

- Pull out the piston assy [H] (primary cup [I], piston [J], secondary cup [K], and return spring [L]).
- Replace:
  Piston Assy
  Dust Cover
  Diaphragm
  Circlip

CAUTION

Do not remove the secondary cup from the piston since removal will damage it.

- Check the parts of the clutch master cylinder (see Clutch Master Cylinder Inspection in the Clutch chapter).

★If any part shows signs of damage, replace it.

- Before assembly, clean all parts including the master cylinder with clutch fluid or alcohol.

CAUTION

Use only disc brake fluid, isopropyl alcohol or ethyl alcohol, for cleaning parts. Do not use any other fluid for cleaning these parts.
Gasoline, motor oil or any other petroleum distillate will cause deterioration of the rubber parts. Oil spilled on any part will be difficult to wash off completely, and will eventually deteriorate the rubber used in the cylinder.

- Apply clutch fluid to the parts removed and to the inner wall of the cylinder.
- Take care not to scratch the piston or the inner wall of the cylinder.
- Install the push rod with the dust seal fitted into the groove.

○The push rod round end must be faced inwards.

Torque - Clutch Lever Pivot Bolt: 1.0 N·m (0.10 kgf·m, 8.9 in·lb)
Clutch Lever Pivot Bolt Locknut: 5.9 N·m (0.60 kgf·m, 52 in·lb)

- Install the clutch master cylinder (see Clutch Master Cylinder Installation in the Clutch chapter).

Downloaded from www.vulcanriders-sweden.org

Periodic Maintenance Procedures

Clutch Slave Cylinder Piston Seal Replacement

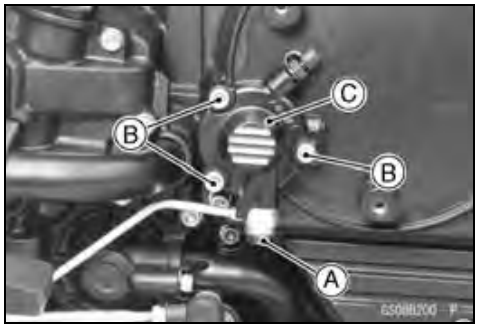

- Remove the engine pulley outer cover (see Engine Pulley Outer Cover Removal in the Final Drive).
- Loosen the banjo bolt [A] at the clutch pipe lower end, and tighten it loosely.
- Unscrew the slave cylinder bolts [B] and detach the slave cylinder with the pipe installed from the engine.
- Pump the clutch lever until the piston comes out of the cylinder.
- Unscrew the banjo bolt and remove the slave cylinder [C].

CAUTION

Immediately wash away any clutch fluid that spills. It may damage painted surfaces.

NOTE

○*If the clutch slave cylinder is removed and left alone, the piston will be pushed out by spring force.*

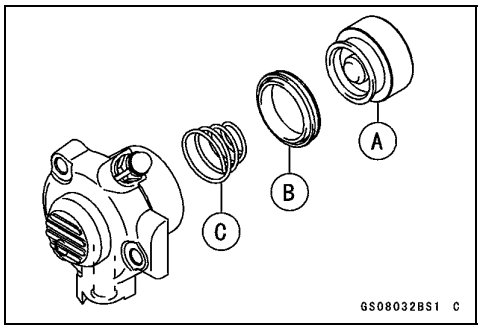

- Remove:
  Piston [A]
  Piston Seal [B]
  Spring [C]

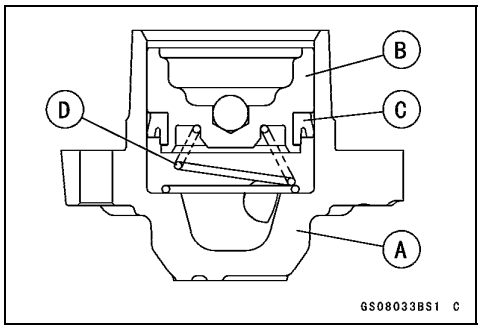

- Replace the piston seal with a new one.
- Apply clutch fluid to the outer surface of the piston and the piston seal.
- Assemble the following as shown.
  Cylinder [A]
  Piston [B]
  Piston Seal [C]
  Spring [D]

Spark Plug Replacement



- Remove:
  Fuel Tank (see Fuel Tamk Removal in the Fuel System (DFI) chapter)
  Spark Plug Caps [A]

Downloaded from www.vulcanriders-sweden.org

Periodic Maintenance Procedures

● Remove the spark plug using a 14 mm (0.55 in.) plug wrench [A] vertically.



CAUTION

The insulator [A] of the spark plug may break if when the wrench is inclined during loosening.

Inclined Spark Plug Wrench [B]
Contact (Spark Plug and Plug Wrench) [C]
Bad [D]
Vertically Spark Plug Wrench [E]
Good [F]

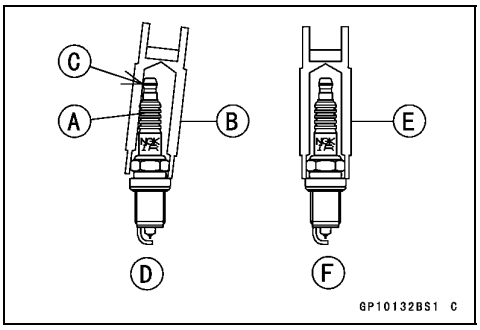

● Replace the spark plug with a new one.

Standard Spark Plug
Type: NGK ILZKAR7B11

● Insert the new spark plug [A] and plug wrench [B] in the plug hole, and finger-tighten it first.
● Using the plug wrench vertically, tighten the plug.

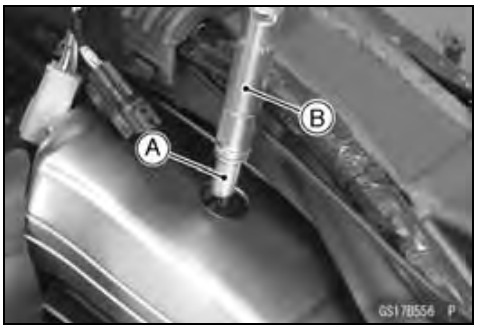

CAUTION

The insulator of the spark plug may break if when the wrench is inclined during tightening.

Torque - Spark Plugs: 18 N·m (1.8 kgf·m, 13 ft·lb)

● Install the spark plug caps securely.
● Be sure the spark plug caps are installed by pulling up it lightly.

Downloaded from www.vulcanriders-sweden.org

Fuel System (DFI)

Table of Contents

Exploded View 3-4
Specifications 3-8
Special Tools and Sealant 3-10
DFI System 3-12
DFI Parts Location 3-18
DFI Servicing Precautions 3-20
  DFI Servicing Precautions 3-20
Troubleshooting the DFI System 3-22
  Outline 3-22
  Inquiries to Rider 3-26
DFI System Troubleshooting Guide 3-29
Self-Diagnosis 3-34
  Self-diagnosis Outline 3-34
  Self-diagnosis Procedures 3-34
    Service Code Reading 3-38
    Service Code Erasing 3-38
  Backups 3-40
Throttle Position Sensor (Service Code 11) 3-42
    Throttle Position Sensor Removal 3-42
    Throttle Position Sensor Output Voltage Inspection 3-42
    Throttle Position Sensor Input Voltage Inspection 3-43
Inlet Air Pressure Sensor (Service Code 12) 3-45
    Inlet Air Pressure Sensor Removal 3-45
    Inlet Air Pressure Sensor Installation 3-45
    Inlet Air Pressure Sensor Input Voltage Inspection 3-45
    Inlet Air Pressure Sensor Output Voltage Inspection 3-46
Inlet Air Temperature Sensor (Service Code 13) 3-51
    Inlet Air Temperature Sensor Removal/Installation 3-51
    Inlet Air Temperature Sensor Output Voltage Inspection 3-51
    Inlet Air Temperature Sensor Resistance Inspection 3-52
Water Temperature Sensor (Service Code 14) 3-54
    Water Temperature Sensor Removal/Installation 3-54
    Water Temperature Sensor Output Voltage Inspection 3-54
    Water Temperature Sensor Resistance Inspection 3-55
Accelerator Position Sensor (Service Code 18) 3-56
    Accelerator Position Sensor Removal 3-56
    Accelerator Position Sensor Output Voltage Inspection 3-56
    Accelerator Position Sensor Input Voltage Inspection 3-57
    Accelerator Position Sensor Resistance Inspection 3-57
Crankshaft Sensor (Service Code 21) 3-59
    Crankshaft Sensor Removal/Installation 3-59
    Crankshaft Sensor Resistance Inspection 3-59
    Crankshaft Sensor Peak Voltage Inspection 3-59
Speed Sensor (Service Code 24) 3-61
    Speed Sensor Removal/Installation 3-61
    Speed Sensor Input Voltage Inspection 3-61
    Speed Sensor Output Voltage Inspection 3-62
Gear Position Switch (Service Code 25) 3-64
    Gear Position Switch Removal/Installation 3-64
    Gear Position Switch Resistance Inspection 3-64

Downloaded from www.vulcanriders-sweden.org

Gear Position Switch Output Voltage Inspection 3-64
Vehicle-down Sensor (Service Code 31) 3-66
Vehicle-down Sensor Removal 3-66
Vehicle-down Sensor Installation 3-67
Vehicle-down Sensor Input Voltage Inspection 3-67
Vehicle-down Sensor Output Voltage Inspection 3-68
Oxygen Sensor - not activated (Service Code 33, Equipped Models) 3-71
Oxygen Sensor Removal/Installation 3-71
Oxygen Sensor Inspection 3-71
Fuel Pump Relay (Service Code 46) 3-74
Fuel Pump Relay Removal/Installation 3-74
Fuel Pump Relay Inspection 3-74
Return Spring (Service Code 49) 3-75
Return Spring Removal 3-75
Return Spring Inspection 3-75
Ignition Coils #1, #2 (Service Code 51, 52) 3-76
Ignition Coil Removal/Installation 3-76
Ignition Coil Primary Winding Resistance Inspection 3-76
Ignition Coil Input Voltage Inspection 3-76
Radiator Fan Relay (Service Code 56) 3-78
Radiator Fan Relay Removal/Installation 3-78
Radiator Fan Relay Inspection 3-78
ETV Acutuator (Service Code 58) 3-79
ETV Actuator Removal 3-79
ETV Actuator Input Voltage Inspection 3-79
ETV Actuator Resistance Inspection 3-80
Air Switching Valve (Service Code 64) 3-81
Air Switching Valve Removal/Installation 3-81
Air Switching Valve Inspection 3-81
Oxygen Sensor Heater (Service Code 67, Equipped Models) 3-82
Oxygen Sensor Heater Removal/Installation 3-82
Oxygen Sensor Heater Resistance Inspection 3-82
Oxygen Sensor Heater Power Source Voltage Inspection 3-83
Battery Voltage (Service Code 97) 3-85
Battery Voltage Inspection 3-85
ETV Control Circuit (Service Code 98) 3-86
ETV Control Circuit Inspection 3-86
Warning Indicator Light (LED) 3-87
Light (LED) Inspection 3-87
ECU 3-88
ECU Identification 3-88
ECU Removal 3-88
ECU Installation 3-88
ECU Power Supply Inspection 3-89
DFI Power Source 3-91
ECU Fuse Removal 3-91
ECU Fuse Installation 3-91
ECU Fuse Inspection 3-91
ECU Main Relay Removal/Installation 3-91
ECU Main Relay Inspection 3-91
Fuel Line 3-92
Fuel Pressure Inspection 3-92
Fuel Flow Rate Inspection 3-93
Fuel Pump 3-95
Fuel Pump Removal 3-95
Fuel Pump Installation 3-96
Fuel Pump Operation Inspection 3-96

Downloaded from www.vulcanriders-sweden.org

Fuel Pump Operating Voltage Inspection 3-96
Pressure Regulator Removal 3-97
Fuel Filter Cleaning 3-98
Fuel Injectors 3-99
Fuel Injector Removal 3-99
Fuel Injector Installation 3-100
Fuel Injector Audible Inspection 3-100
Fuel Injector Resistance Inspection 3-100
Fuel Injector Output Voltage Inspection 3-101
Fuel Injector Input Voltage Inspection 3-102
Fuel Injector Fuel Line Inspection 3-103
Throttle Grip and Cables 3-105
Free Play Inspection 3-105
Free Play Adjustment 3-105
Cable Installation 3-105
Cable Lubrication 3-106
Throttle Body Assy 3-107
Idle Speed Inspection/Adjustment 3-107
Throttle Body Assy Removal 3-107
Throttle Body Assy Installation 3-108
Throttle Body Assy Disassembly 3-110
Throttle Body Assy Assembly 3-111
Inlet Manifold 3-112
Inlet Manifold Removal 3-112
Inlet Mnifold Installation 3-112
Air Cleaner 3-113
Air Cleaner Element Removal/Installation 3-113
Air Cleaner Element Inspection 3-113
Air Cleaner Oil Draining 3-113
Left Air Cleaner Housing Removal 3-113
Left Air Cleaner Housing Installation 3-114
Right Air Cleaner Housing Removal 3-114
Right Air Cleaner Housing Installation 3-115
Fuel Tank 3-117
Fuel Tank Removal 3-117
Fuel Tank Installation 3-119
Fuel Tank Inspection 3-121
Fuel Tank Cleaning 3-121
Evaporative Emission Control System (CAL and SEA Models) 3-122
Parts Removal/Installation 3-122
Hose Inspection 3-122
Separator Inspection 3-122
Separator Operation Test 3-123
Canister Inspection 3-123

Downloaded from www.vulcanriders-sweden.org

Exploded View

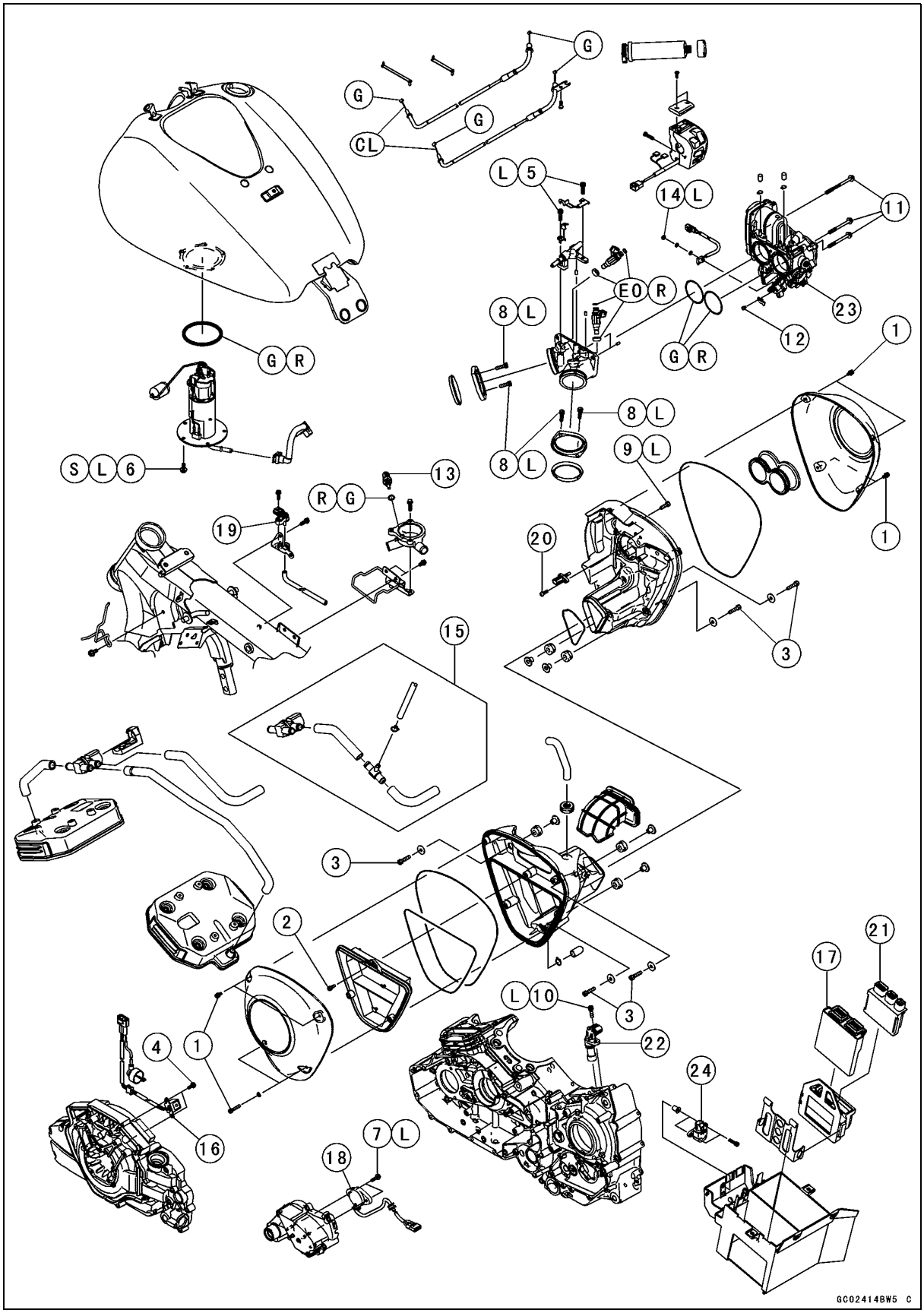

Downloaded from www.vulcanriders-sweden.org

Exploded View

No.	Fastener	Torque			Remarks
		N·m	kgf·m	ft·lb	
1	Air Cleaner Housing Cover Bolts	4.9	0.50	43 in·lb	
2	Air Cleaner Element Bolt	4.9	0.50	43 in·lb	
3	Air Cleaner Housing Bolts	9.8	1.0	87 in·lb	
4	Crankshaft Sensor Bolts	5.9	0.60	52 in·lb	
5	Delivery Joint Bolts	9.8	1.0	87 in·lb	L
6	Fuel Pump Bolts	9.8	1.0	87 in·lb	L, S
7	Gear Position Switch Bolts	3.9	0.40	35 in·lb	L
8	Inlet Manifold Bolts	9.8	1.0	87 in·lb	L
9	Right Air Cleaner Housing Center Bolts	9.8	1.0	87 in·lb	L
10	Speed Sensor Mounting Bolt	9.8	1.0	87 in·lb	L
11	Throttle Body Assy Holder Bolts	9.8	1.0	87 in·lb	
12	Throttle Cable Holder Plate Screw	2.0	0.20	18 in·lb	
13	Water Temperature Sensor	12	1.2	106 in·lb	
14	Cruise Control Cancel Switch (Throttle) Mounting Nut	0.28	0.03	2.5 in·lb	L

15. CAL and SEA Models
16. Crankshaft Sensor
17. ECU
18. Gear Position Sensor
19. Inlet Air Pressure Sensor
20. Inlet Air Temperature Sensor
21. Relay Box
22. Speed Sensor
23. Throttle Body Assy
24. Vehicle-down Sensor

CL: Apply cable lubricant.
EO: Apply engine oil.
G: Apply grease.
L: Apply a non-permanent locking agent.
R: Replacement Parts
S: Follow the specified tightening sequence.

Downloaded from www.vulcanriders-sweden.org

Exploded View

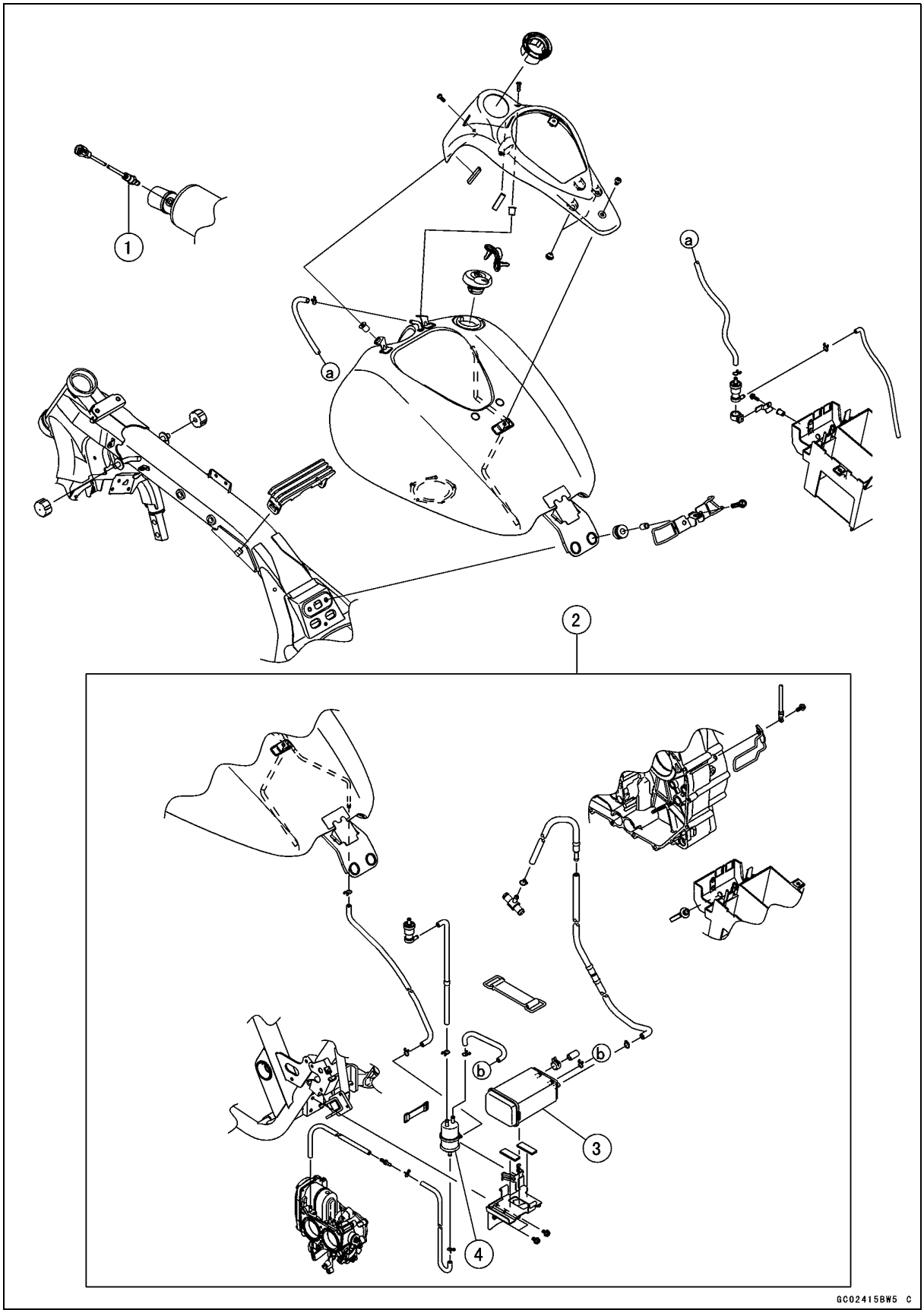

Downloaded from www.vulcanriders-sweden.org

Exploded View

No.	Fastener	Torque			Remarks
		N·m	kgf·m	ft·lb	
1	Oxygen Sensor (Equipped Models)	25	2.5	18	

2. CAL and SEA Models
3. Canister
4. Separator

Downloaded from www.vulcanriders-sweden.org

3-8 FUEL SYSTEM (DFI)

Specifications

Item	Standard
Digital Fuel Injection System	
Idle Speed	950 ±50 r/min (rpm)
Throttle Body Assy:	
Type	Two barrel type
Bore	ϕ42 mm (1.65 in.)
ECU:	
Make	MITSUBISHI ELECTRIC
Type	Digital memory type, with built in IC igniter, sealed with resin
Fuel Pressure (High Pressure Line)	294 kPa (3.0 kgf/cm², 43 psi) with engine idling
Fuel Pump:	
Type	In-tank, friction pump
Discharge	29 mL (0.98 US oz.) or more for 3 seconds
Fuel Injectors:	
Type	INP-284
Nozzle Type	Fine atomizing type with 12 holes
Resistance	About 11.7 ~ 12.3 Ω at 20°C (68°F)
Throttle Position Sensor:	
Output Voltage (1)	DC 3.50 ~ 3.90 V at full throttle opening (for reference)
Output Voltage (2)	DC 4.50 ~ 4.80 V at full throttle opening (for reference)
Input Voltage	DC 4.75 ~ 5.25 V
Inlet Air Pressure Sensor:	
Input Voltage	DC 4.75 ~ 5.25 V
Output Voltage	DC 3.80 ~ 4.20 V at standard atmospheric pressure (see this text for details)
Inlet Air Temperature Sensor:	
Output Voltage	About DC 2.25 ~ 2.50 V at inlet air temperature 20°C (68°F)
Resistance	5.4 ~ 6.6 kΩ at 0°C (32°F)
	0.29 ~ 0.39 kΩ at 80°C (176°F)
Water Temperature Sensor:	
Output Voltage	About DC 2.80 ~ 2.97 V at 20°C (68°F)
Accelerator Position Sensor:	
Output Voltage (1)	DC 0.50 ~ 0.90 V at ordinary throttle position
	DC 3.85 ~ 4.75 V at full throttle opening (for reference)
Output Voltage (2)	DC 0.35 ~ 1.05 V at ordinary throttle position
	DC 3.85 ~ 4.75 V at full throttle opening (for reference)
Input Voltage	DC 4.75 ~ 5.25 V
Resistance	4 ~ 6 kΩ
Speed Sensor:	
Input Voltage	DC 4.75 ~ 5.25 V
Output Voltage	About DC 0.05 ~ 0.09 V or DC 4.5 ~ 4.9 V at ignition switch ON and 0 km/h

Downloaded from www.vulcanriders-sweden.org

Specifications

Item	Standard
Vehicle-down Sensor:	
Input Voltage	DC 4.75 ~ 5.25 V
Output Voltage	With sensor tilted 40 ~ 50° or more right or left: DC 0.65 ~ 1.35 V
	With sensor arrow mark pointed up: DC 3.55 ~ 4.45 V
Oxygen Sensor (Equipped Models):	
Output Voltage (Rich)	DC 0.8 V or more
Output Voltage (Lean)	DC 0.24 V or less
Heater Resistance	6.7 ~ 10.5 Ω at 20°C (68°F)
ETV Actuator	
Input Voltage	About DC 1 ~ 2 V
Can Communication Line Resistance (at ECU)	122 ~ 126 Ω
Throttle Grip and Cables	
Throttle Grip Free Play	2 ~ 3 mm (0.08 ~ 0.12 in.)
Air Cleaner	
Element	Viscous paper element

Downloaded from www.vulcanriders-sweden.org

Special Tools and Sealant

Oil Pressure Gauge, 5 kgf/cm²:
57001-125

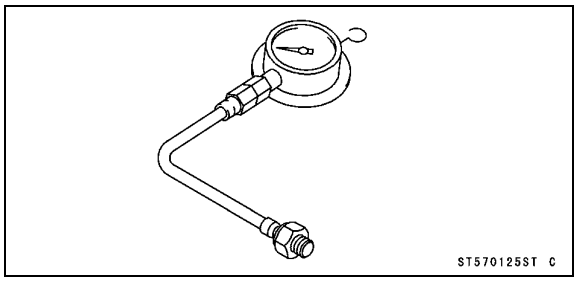

Needle Adapter Set:
57001-1457

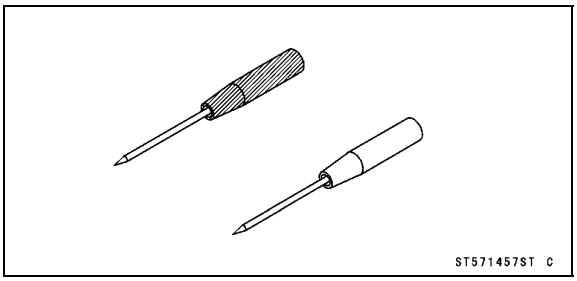

Jack:
57001-1238

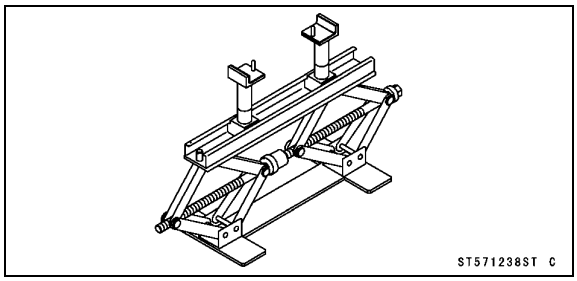

Fuel Pressure Gauge Adapter:
57001-1593

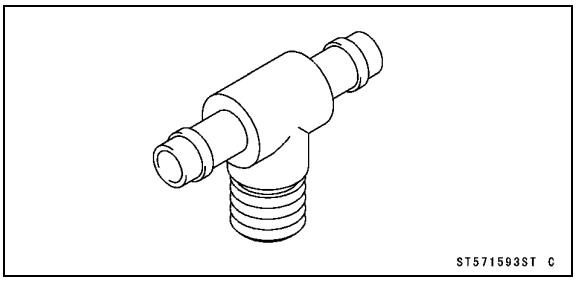

Fork Oil Level Gauge:
57001-1290

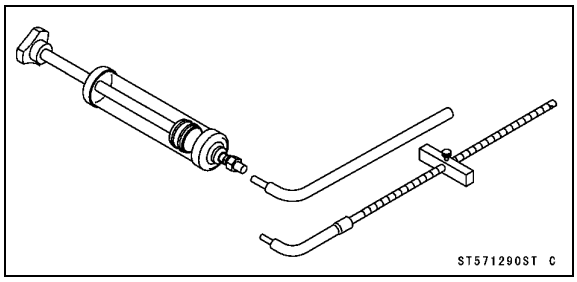

Fuel Hose:
57001-1607

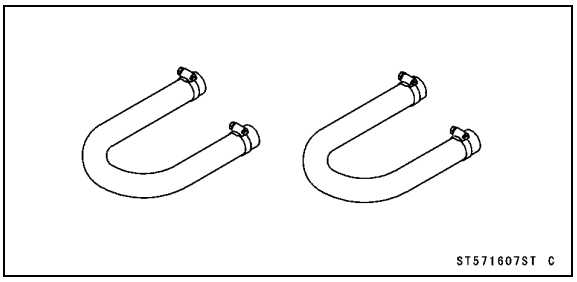

Vacuum Gauge:
57001-1369

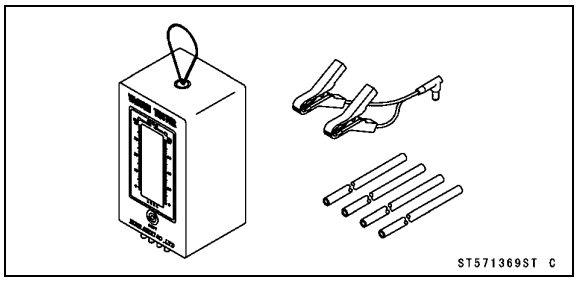

Speed Sensor Measuring Adapter:
57001-1667

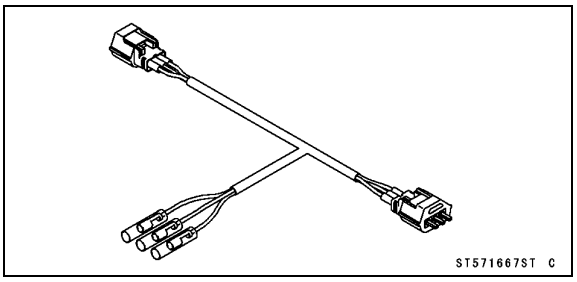

Hand Tester:
57001-1394

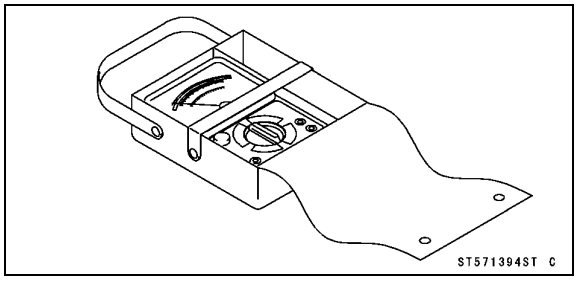

Measuring Adapter:
57001-1700

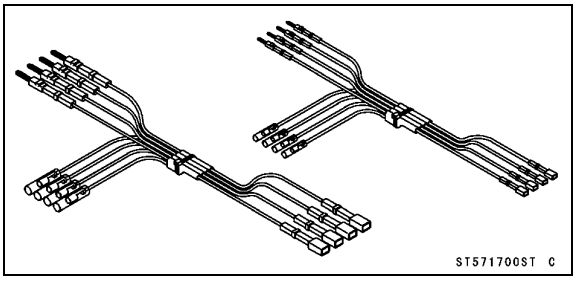

Downloaded from www.vulcanriders-sweden.org

Special Tools and Sealant

Kawasaki Bond (Silicone Sealant):
56019-120

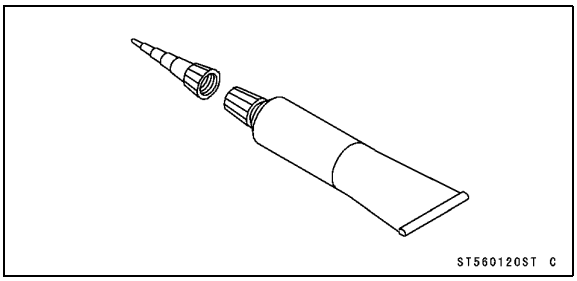

Downloaded from www.vulcanriders-sweden.org

DFI System

DFI System

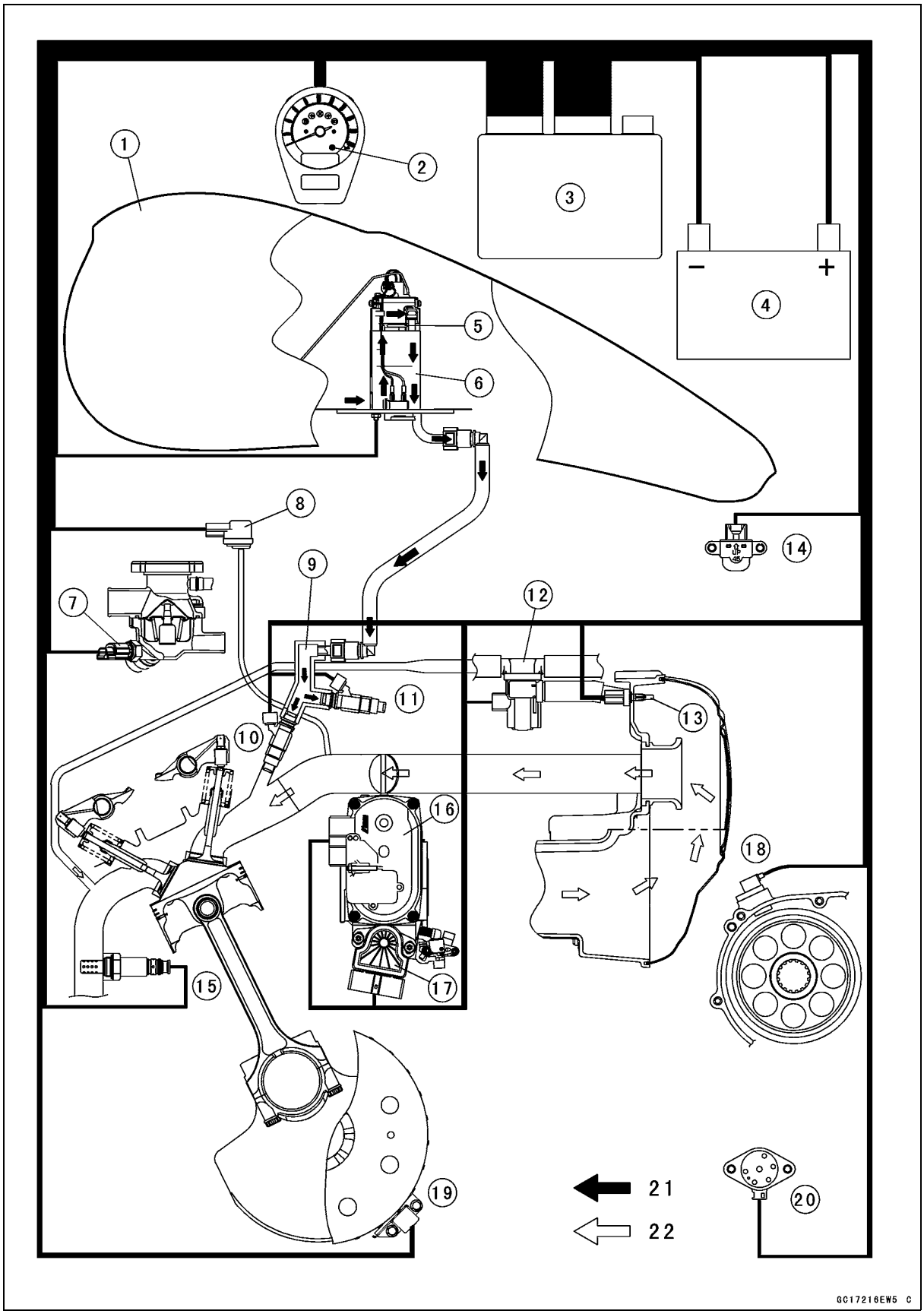

Downloaded from www.vulcanriders-sweden.org

DFI System

1. Fuel Tank
2. FI Indicator LED Light
3. ECU
4. Battery 12 V 18 Ah
5. Pressure Regulator
6. Fuel Pump
7. Water Temperature Sensor
8. Inlet Air Pressure Sensor
9. Delivery Joint
10. Fuel Injector #1
11. Fuel Injector #2
12. Air Switching Valve
13. Inlet Air Temperature Sensor
14. Vehicle-down Sensor
15. Oxygen Sensor (Equipped Models)
16. Throttle Position Sensor/ETV Actuator
17. Accelerator Position Sensor
18. Speed Sensor
19. Crankshaft Sensor
20. Gear Position Switch
21. Fuel Flow
22. Air Flow

Downloaded from www.vulcanriders-sweden.org

DFI System

DFI System Wiring Diagram

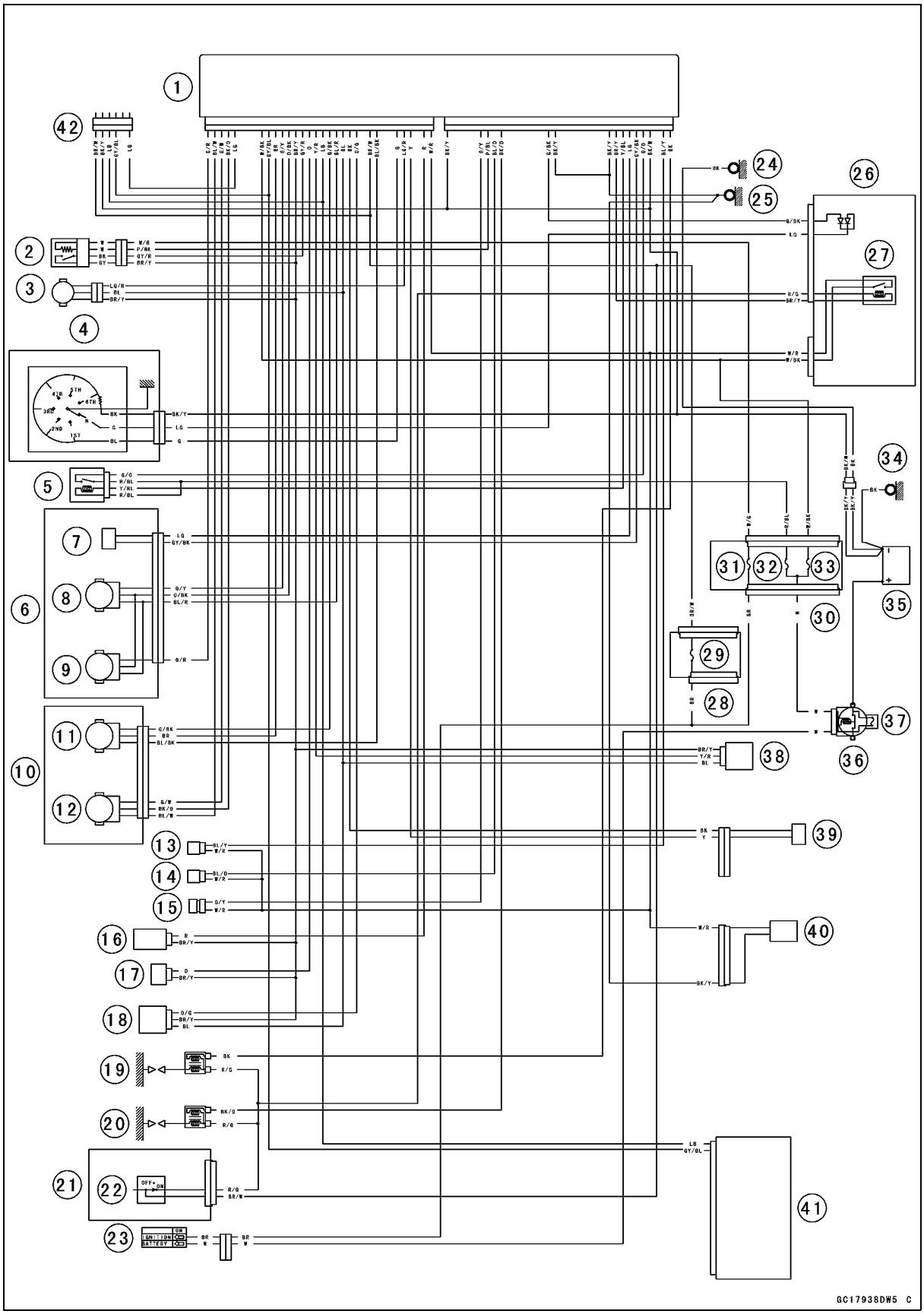

Downloaded from www.vulcanriders-sweden.org

DFI System

Part Names

1. ECU
2. Oxygen Sensor (Equipped Models)
3. Speed Sensor
4. Gear Position Switch
5. ETV Actuator Relay
6. Throttle Position Sensor/ETV Actuator
7. ETV Actuator
8. Throttle Position Sensor 2
9. Throttle Position Sensor 1
10. Accelerator Position Sensor
11. Accelerator Position Sensor 2
12. Accelerator Position Sensor 1
13. Fuel Injector #2
14. Fuel Injector #1
15. Air Switching Valve
16. Inlet Air Temperature Sensor
17. Water Temperature Sensor
18. Inlet Air Pressure Sensor
19. Ignition Coil #2 (Rear Cylinder)
20. Ignition Coil #1 (Front Cylinder)
21. Right Handlebar Switch Housing
22. Engine Stop Switch
23. Ignition Switch
24. Frame Ground 6
25. Frame Ground 3
26. Relay Box
27. Fuel Pump Relay
28. Fuse Box 1
29. Ignition Fuse 10 A
30. Fuse Box 2
31. Oxygen Sensor Heater Fuse 10 A (Equipped Models)
32. ETV Actuator Relay Fuse 10 A
33. ECU Fuse 10A
34. Engine Ground
35. Battery
36. Starter Relay
37. Main Fuse 30 A
38. Vehicle-down Sensor
39. Crankshaft Sensor
40. Fuel Pump
41. Meter Unit
42. Kawasaki Diagnostic System Connector

○Color Codes:

BK: Black	GY: Gray	R: Red
BL: Blue	LB: Light Blue	V: Violet
BR: Brown	LG: Light Green	W: White
CH: Chocolate	O: Orange	Y: Yellow
DG: Dark Green	P: Pink	
G: Green	PU: Purple	

Downloaded from www.vulcanriders-sweden.org

DFI System

Terminal Numbers of ECU Connectors

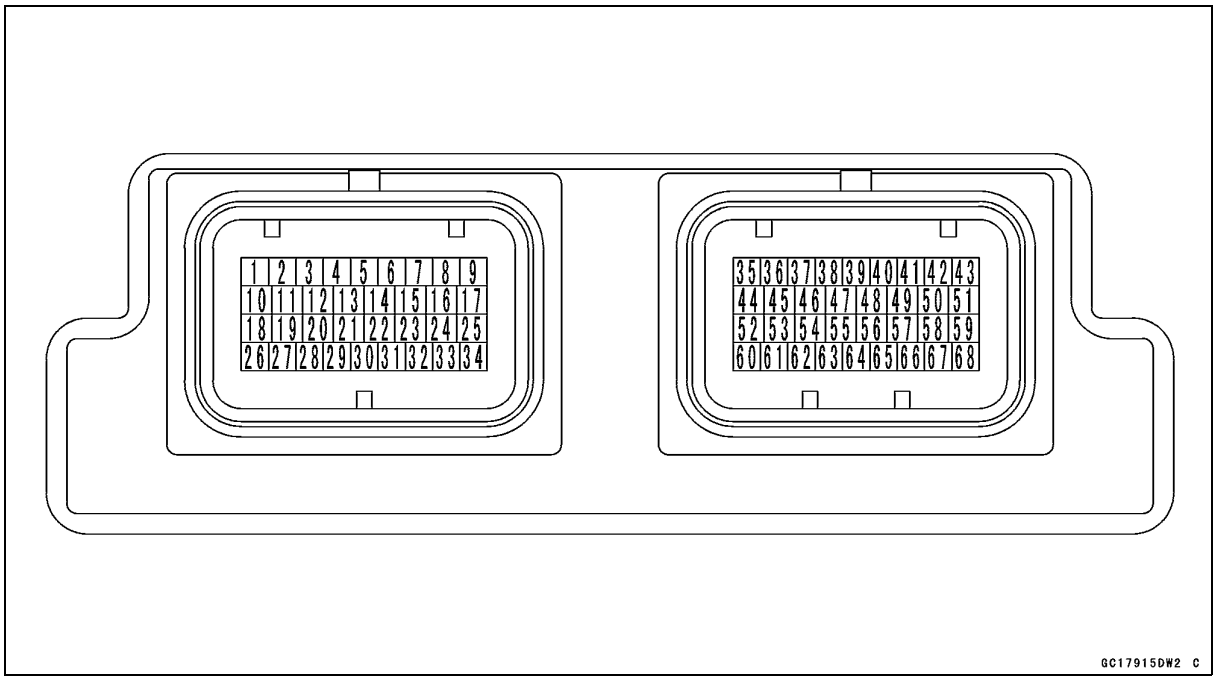

Terminal Names

1. Ignition Coil #2 (Rear Cylinder): BK
2. Fuel Injector #2 (Rear Cylinder): BL/Y
3. Unused
4. Ground for ETV Actuator (to Battery): BK/Y
5. Power Supply to ETV Actuator (from ETV Actuator Relay): G/O
6. ETV Actuator (+): GY/BK
7. ETV Actuator (–): LG
8. ETV Actuator Relay: Y/BL
9. Fuel Pump Relay: BR/Y
10. Engine Ground: BK/Y
11. Unused
12. Unused
13. Unused
14. Unused
15. Unused
16. Starter Lockout Switch: Y/G
17. Radiator Fan Relay: BR/W
18. Engine Ground: BK/Y
19. Sidestand Switch: G/BK
20. Unused
21. Unused
22. Cruise Control Cancel Switch (Rear Brake): BL
23. Cruise Control Cancel Switch (Throttle): BK/BL
24. Cruise Control Switch (SET/–): R/G
25. Starter Button: BK/R
26. Ignition Coil #1 (Front Cylinder): BK/O
27. Fuel Injector #1 (Front Cylinder): BL/O
28. Oxygen Sensor Heater (Equipped Models): P/BL
29. Air Switching Valve: G/Y
30. Front/Rear Brake Light Switch (for Cruise Control Cancel): BL
31. Cruise Control Cancel Switch (Clutch): V
32. Cruise Control Switch (RES/+): GY/BL
33. Cruise Control ON/OFF Button: BL/R
34. Ground for Control System: BK/Y

Downloaded from www.vulcanriders-sweden.org

DFI System

35. Battery Monitor Voltage: W/R
36. Inlet Air Temperature Sensor: R
37. Unused
38. Crankshaft Sensor (+): Y
39. Speed Sensor: LG/R
40. Gear Position Switch: G
41. Unused
42. Unused
43. Power Supply to Accelerator Position Sensor 2: BL/BK
44. Power Supply to ECU (from Ignition Switch): BR/W
45. Unused
46. Inlet Air Pressure Sensor: O/G
47. Crankshaft Sensor (–): BK
48. Power Supply to Sensors: BL
49. Power Supply to Throttle Position Sensor 1/2: BL/R
50. Accelerator Position Sensor 2: G/BK
51. CAN Communication Line (Low): LB
52. Vehicle-down Sensor: Y/R
53. Water Temperature Sensor: O
54. Oxygen Sensor (Equipped Models): GY/R
55. Ground for Sensors: BR/Y
56. Ground for Throttle Position Sensor 1/2: O/BK
57. Throttle Position Sensor 2: G/Y
58. Ground for Accelerator Position Sensor 2: BR
59. CAN Communication Line (High): GY/BL
60. Power Supply to ECU (from Battery): W/BK
61. Unused
62. Unused
63. Unused
64. External Communication Line (*KDS): LG
65. Ground for Accelerator Position Sensor 1: BK/O
66. Accelerator Position Sensor 1: G/W
67. Power Supply to Accelerator Position Sensor 1: BL/W
68. Throttle Position Sensor 1: G/R

*: KDS (Kawasaki Diagnostic System)

Downloaded from www.vulcanriders-sweden.org

DFI Parts Location

Ignition Coil #1 (Front Cylinder) [A]
Air Switching Valve [B]



Ignition Coil #2 (Rear Cylinder) [A]
Inlet Air Pressure Sensor [B]



Water Temperature Sensor [A]
Fuel Injector #1 (Front Cylinder) [B]
Fuel Injector #2 (Rear Cylinder) [C]
Inlet Air Temperature Sensor [D]



Throttle Position Sensor [A]
ETV Actuator [B]
Accelerator Position Sensor [C]

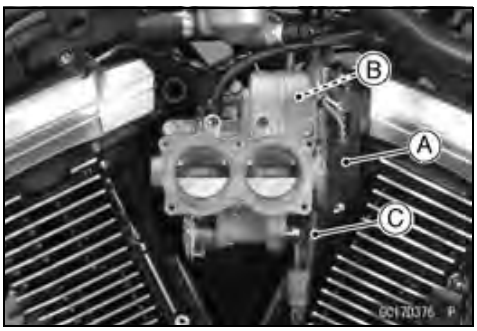

Crankshaft Sensor [A]



Downloaded from www.vulcanriders-sweden.org

DFI Parts Location

Gear Position Switch [A]



Speed Sensor [A]
Kawasaki Diagnostic System Connector (6 Pins Connector) [B]

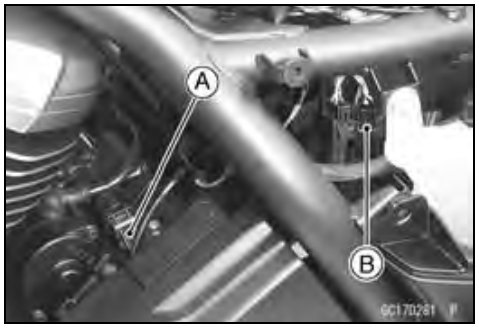

ETV Actuator Relay [A] (R/BL, Y/BL, R/BL, G/O Leads)
Vehicle-down Sensor [B]
Fuse Box 1 [C] (Oxygen Sensor Heater Fuse 10 A (Equipped Models))
Fuse Box 2 [D] (ECU Fuse 10 A, ETV Actuator Relay Fuse 10 A)
Battery [E]
Relay Box [F] (Fuel Pump Relay, Radiator Fan Relay)
ECU [G]

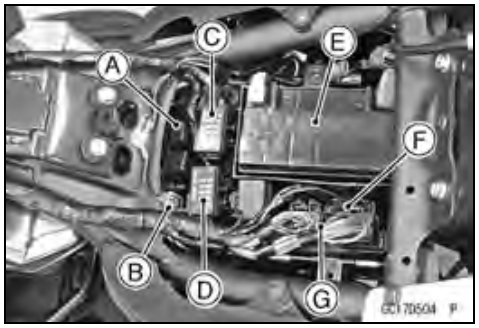

Fuel Pump [A]

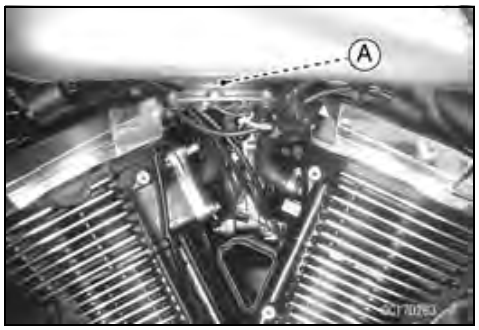

Oxygen Sensor [A] (Equipped Models)

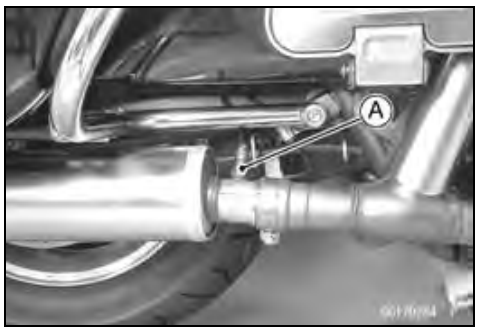

Downloaded from www.vulcanriders-sweden.org

DFI Servicing Precautions

DFI Servicing Precautions

There are a number of important precautions that should be followed servicing the DFI system.

- This DFI system is designed to be used with a 12 V sealed battery as its power source. Do not use any other battery except for a 12 V sealed battery as a power source.
- Do not reverse the battery cable connections. This will damage the ECU.
- To prevent damage to the DFI parts, do not disconnect the battery cables or any other electrical connections when the ignition switch is on or while the engine is running.
- Take care not to short the leads that are directly connected to the battery positive (+) terminal to the chassis ground.
- When charging, remove the battery from the motorcycle. This is to prevent ECU damage by excessive voltage.

- Whenever the DFI electrical connections are to be disconnected, first turn off the ignition switch, and disconnect the battery (–) terminal. Do not pull the lead, only the connector. Conversely, make sure that all the DFI electrical connections are firmly reconnected before starting the engine.
- Connect these connectors until they click [A].

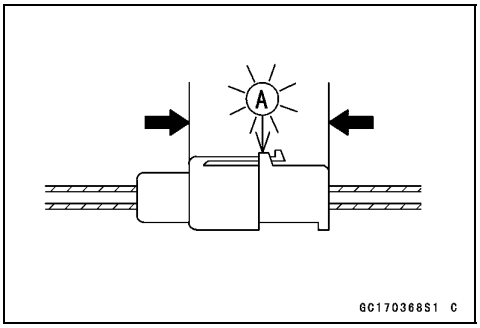

- Do not turn the ignition switch ON while any of the DFI electrical connectors are disconnected. The ECU memorizes service codes.
- Do not spray water on the electrical parts, DFI parts, connectors, leads and wiring.
- If a transceiver is installed on the motorcycle, make sure that the operation of the DFI system is not influenced by electric wave radiated from the antenna. Check operation of the system with the engine at idle. Locate the antenna as far as possible away from the ECU.
- When any fuel hose is disconnected, do not turn on the ignition switch. Otherwise, the fuel pump will operate and fuel will spout from the fuel hose.
- Do not operate the fuel pump if the pump is completely dry. This is to prevent pump seizure.
- Before removing the fuel system parts, blow the outer surfaces of these parts clean with compressed air.
- When any fuel hose is disconnected, fuel may spout out by residual pressure in the fuel line. Cover the hose joint with a piece of clean cloth to prevent fuel spillage.
- When installing the fuel hoses, avoid sharp bending, kinking, flattening or twisting, and route the fuel hoses with a minimum of bending so that the fuel flow will not be obstructed.
- Run the hoses according to Cable, Wire, and Hose Routing section in the Appendix chapter.
- To prevent corrosion and deposits in the fuel system, do not add to fuel any fuel antifreeze chemicals.

Downloaded from www.vulcanriders-sweden.org

DFI Servicing Precautions

○If the motorcycle is not properly handled, the high pressure inside the fuel line can cause fuel to leak or the hose to burst. Remove the fuel tank (see Fuel Tank Removal) and check the fuel hose [A].

★Replace the fuel hose if any fraying, cracks or bulges are noticed.



○To maintain the correct fuel/air mixture (F/A), there must be no inlet air leaks in the DFI system. Be sure to install the oil filler cap [A] after filling the engine oil.

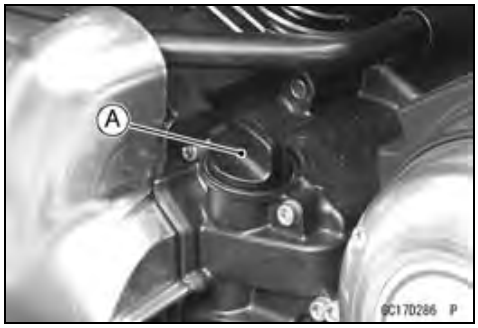

Downloaded from www.vulcanriders-sweden.org

Troubleshooting the DFI System

The warning indicator light (LED) [A] is used for the FI/ETV (Electrical Throttle Valve) indicator, oil pressure warning indicator and water temperature warning indicator.

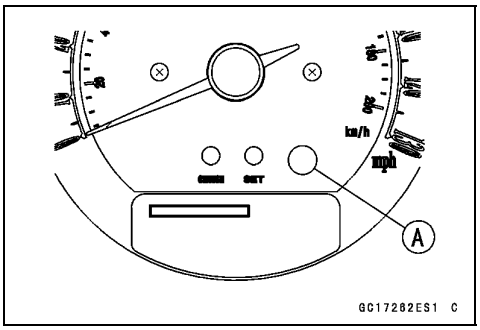

Outline

When problem occurs with DFI system, the warning indicator light (LED) [A] goes on and the “Error” segments [B], service code [C] and FI warning symbol [D] are displayed on the LCD (Liquid Crystal Display) to alert the rider. The service code is displayed by the number of two digits.

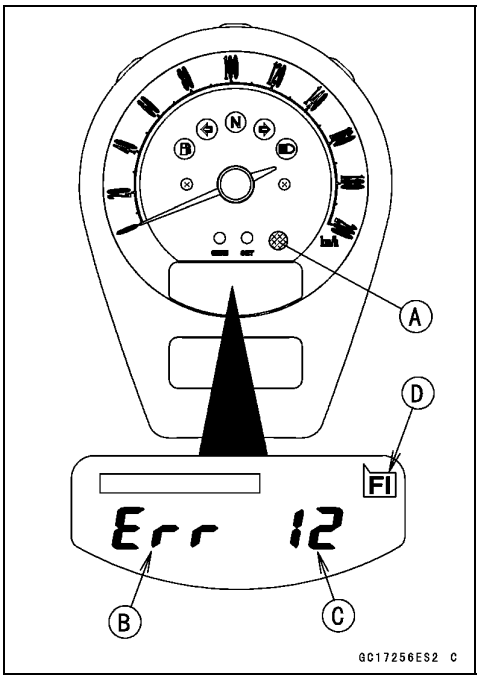

When problem occurs with ETV (Electrical Throttle Valve) system, the warning indicator light (LED) [A] blinks and the “Error” segments [B], service code [C] and FI warning symbol [D] are displayed on the LCD (Liquid Crystal Display) to alert the rider. The service code is displayed by the number of two digits.

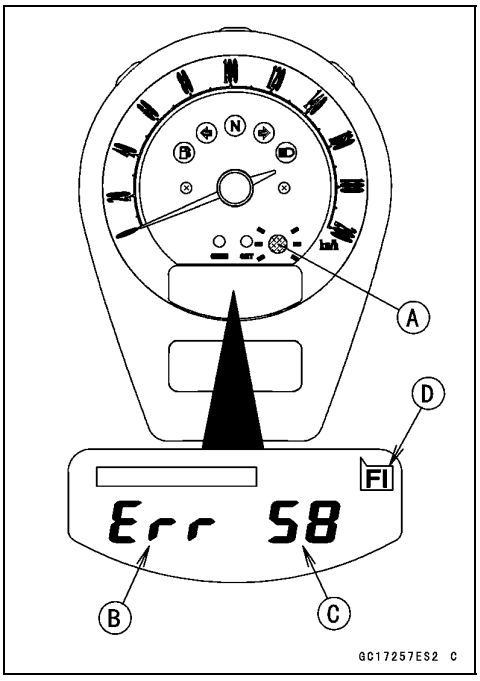

Downloaded from www.vulcanriders-sweden.org

Troubleshooting the DFI System

If the problem is with the following parts, the ECU can not recognize these problem. Therefore, the warning indicator light (LED) does not go on and the “Error” segments, service code and FI warning symbol are not displayed.

LCD for Meter Unit
Fuel Pump
Fuel Injectors
Ignition Coil Secondary Wiring and Ground Wiring
ECU Power Source Wiring and Ground Wiring

When the service code [A] is displayed, for first ask the rider about the conditions [B] of trouble, and then start to determine the cause [C] of problem.

As a pre-diagnosis inspection, check the ECU for ground and power supply, the fuel line for no fuel leaks, and for correct pressure. The pre-diagnosis items can not be detected by the DFI self-diagnosis function.

Don’t rely solely on the DFI self-diagnosis function, use common sense.

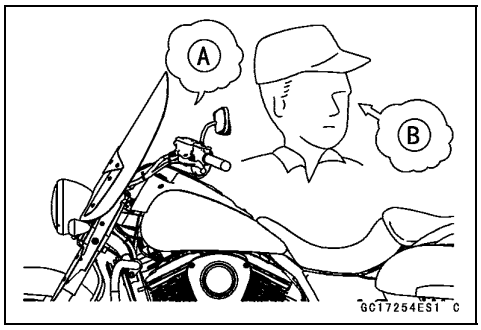

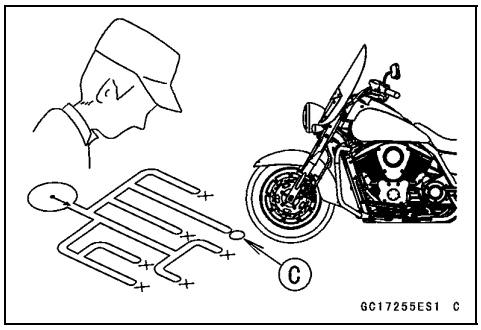

Even when the DFI system is operating normally, the warning indicator light (LED) goes on and the “Error” segments, service code and FI warning symbol may be displayed under strong electrical interface. In this case, additional measures are not required. Turn the ignition switch OFF to go off the indicator light, segments, code and symbol.

If the "Error" segments, service code and FI warning symbol of the motorcycle brought in for repair still are displayed, check the content of the service code.

When repair has been done, the "Error" segments, service code and FI warning symbol go off (return to the normal display). But the service codes stored in memory of the ECU are not erased to preserve the problem history. The problem history can be referred using the KDS (Kawasaki Diagnostic System) when solving unstable problems.

When the motorcycle is down, the vehicle-down sensor operates and the ECU shuts off the fuel pump relay, fuel injectors and ignition system. The ignition switch is left ON. If the starter button is pushed, the electric starter turns but the engine does not start. When the starter button is pushed, the warning indicator light (LED) blinks and the FI warning symbol is displayed on the LCD but the “Error” segments and the service code are not displayed. To start the engine again, raise the motorcycle, turn the ignition switch OFF, and then ON.

Downloaded from www.vulcanriders-sweden.org

Troubleshooting the DFI System

Much of the DFI system troubleshooting work consists of confirming continuity of the wiring. The DFI parts are assembled and adjusted with precision, and it is impossible to disassemble or repair them.

- When checking the DFI parts, use a digital meter which can be read two decimal place voltage or resistance.

○The DFI part connectors [A] have seals [B], including the ECU.

- When measuring the input or output voltage with the connector joined, use the needle adapter set [C].

Special Tool - Needle Adapter Set: 57001-1457

- Insert the needle adapter inside the seal until the needle adapter reaches the terminal.

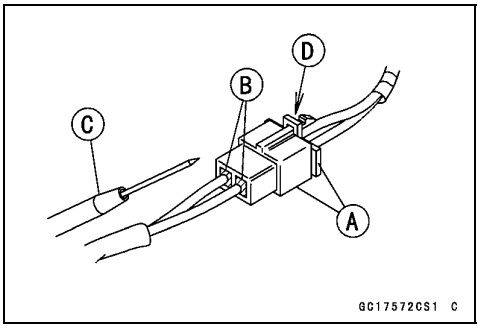

CAUTION

Insert the needle adapter straight along the terminal in the connector to prevent short-circuit between terminals.

- Make sure that measuring points are correct in the connector, noting the position of the lock [D] and the lead color before measurement. Do not reverse connections of a digital meter.
- Be careful not to short-circuit the leads of the DFI or electrical system parts by contact between adapters.
- Turn the ignition switch ON and measure the voltage with the connector joined.

CAUTION

Incorrect, reverse connection or short circuit by needle adapters could damage the DFI or electrical system parts.

○After measurement, remove the needle adapters and apply silicone sealant to the seals [A] of the connector [B] for waterproofing.

Sealant - Kawasaki Bond (Silicone Sealant): 56019-120

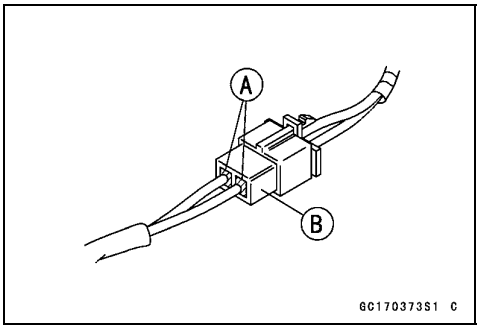

- Always check battery condition before replacing the DFI parts. A fully charged battery is a must for conducting accurate tests of the DFI system.
- Trouble may involve one or in some cases all items. Never replace a defective part without determining what CAUSED the problem. If the problem was caused by some other item or items, they too must be repaired or replaced, or the new replacement part will soon fail again.
- Measure coil winding resistance when the DFI part is cold (at room temperature).

Downloaded from www.vulcanriders-sweden.org

Troubleshooting the DFI System

● Make sure all connectors in the circuit are clean and tight, and examine wires for signs of burning, fraying, short, etc. Deteriorated wires and bad connections can cause reappearance of problems and unstable operation of the DFI system.

★If any wiring is deteriorated, replace the wiring.

● Pull each connector [A] apart and inspect it for corrosion, dirt, and damage.

★If the connector is corroded or dirty, clean it carefully. If it is damaged, replace it. Connect the connectors securely.

● Check the wiring for continuity.

○Use the wiring diagram to find the ends of the lead which is suspected of being a problem.

○Connect the hand tester between the ends of the leads.

Special Tool - Hand Tester: 57001-1394

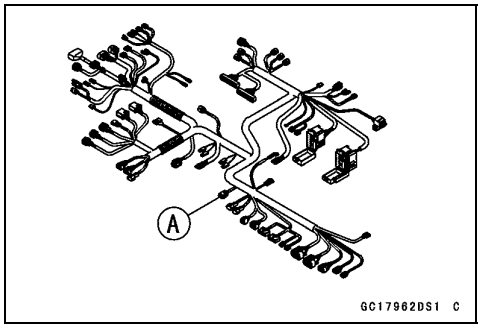

○Set the tester to the × 1 Ω range, and read the tester.

★If the tester does not read 0 Ω, the lead is defective. Replace the lead or the main harness or the subharness.

○If both ends of a harness [A] are far apart, ground [B] the one end [C], using a jumper lead [D] and check the continuity between the end [E] and the ground [F]. This enables to check a long harness for continuity. If the harness is open, repair or replace the harness.

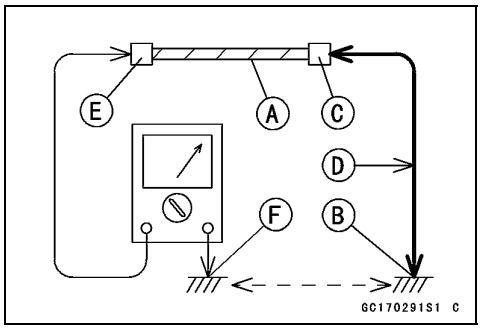

○When checking a harness [A] for short circuit, open one end [B] and check the continuity between the other end [C] and ground [D]. If there is continuity, the harness has a short circuit to ground, and it must be repaired or replaced.

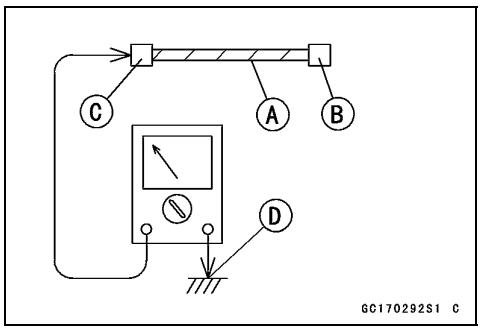

● Narrow down suspicious locations by repeating the continuity tests from the ECU connectors.

★If no abnormality is found in the wiring or connectors, the DFI parts are the next likely suspects. Check the part, starting with input and output voltages. However, there is no way to check the ECU itself.

★If an abnormality is found, replace the affected DFI part.

★If no abnormality is found in the wiring, connectors, and DFI parts, replace the ECU.

Downloaded from www.vulcanriders-sweden.org

Troubleshooting the DFI System

DFI Diagnosis Flow Chart

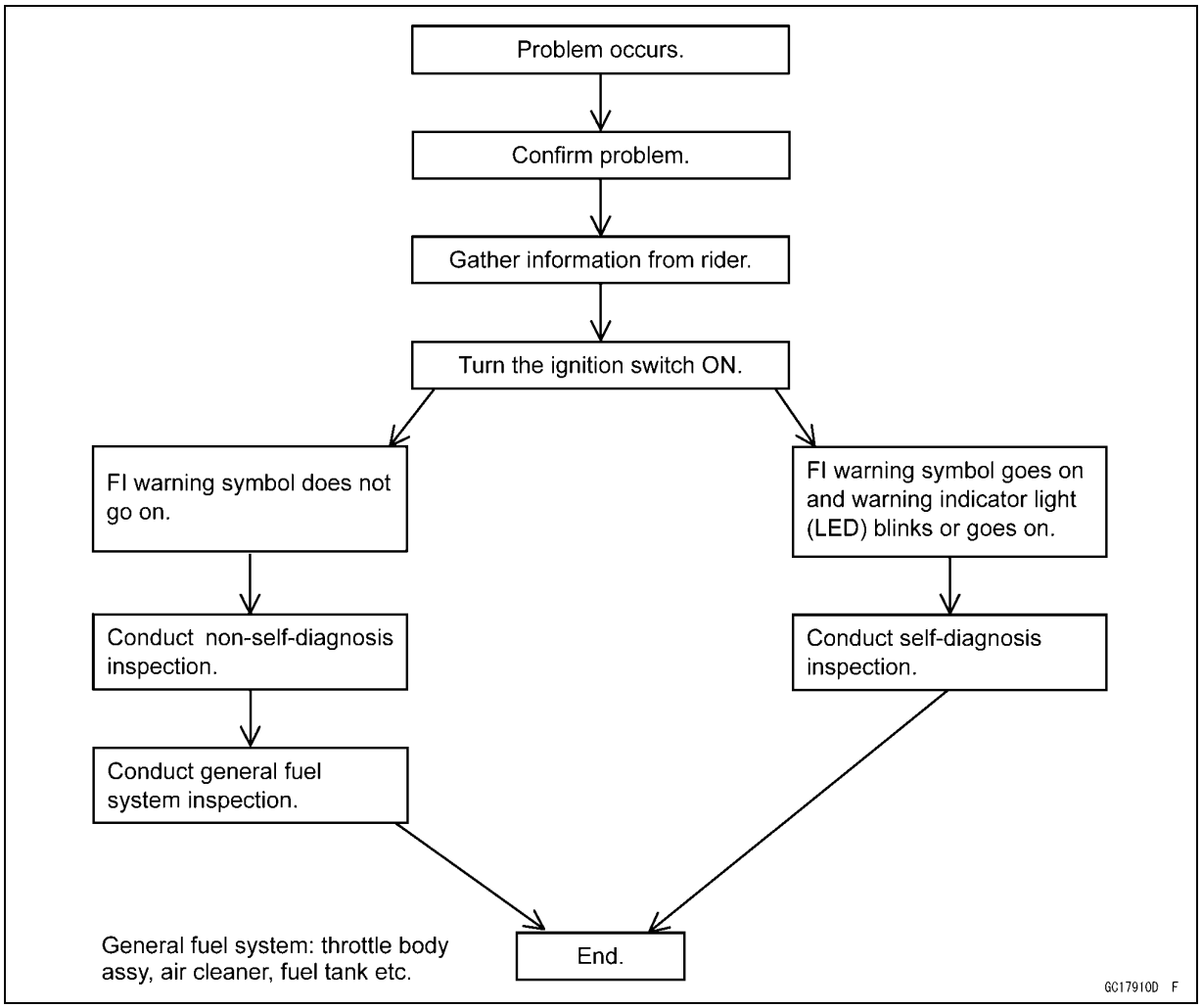

Inquiries to Rider

- Each rider reacts to problems in different ways, so it is important to confirm what kind of symptoms the rider has encountered.
- Try to find out exactly what problem occurred under exactly what conditions by asking the rider; knowing this information may help you reproduce the problem.
- The following sample diagnosis sheet will help prevent you from overlooking any areas, and will help you decide if it is a DFI system problem, or a general engine problem.

Downloaded from www.vulcanriders-sweden.org

Troubleshooting the DFI System

Sample Diagnosis Sheet

Rider name:	**Registration No. (license plate No.):**	**Year of initial registration:**
Model:	**Engine No.:**	**Frame No.:**
Date problem occurred:		**Mileage:**
Environment when problem occurred.		
Weather	☐ fine, ☐ cloudy, ☐ rain, ☐ snow, ☐ always, ☐ other:	
Temperature	☐ hot, ☐ warm, ☐ cold, ☐ very cold, ☐ always, ☐ other:	
Problem frequency	☐ chronic, ☐ often, ☐once	
Road	☐ street, ☐ highway, ☐ mountain road (☐ uphill, ☐ downhill), ☐ bumpy, ☐ pebble	
Altitude	☐ normal, ☐ high (about 1 000 m or more)	
Motorcycle conditions when problem occurred.		
Warning indicator light (LED)	☐ Goes on immediately after ignition switch ON, and goes off after engine pressure becomes high enough (with engine running).	
	☐ Goes on immediately after ignition switch ON, and “Error” segments, service code and FI warning symbol are displayed on the LCD (DFI system problem).	
	☐ Start blinks after ignition switch ON, and “Error” segments, service code and FI warning symbol are displayed on the LCD (ETV system problem).	
	☐ Does not go on or blink after ignition switch ON.	
Starting difficulty	☐ starter motor not rotating.	
	☐ starter motor rotating but engine do not turn over.	
	☐ starter motor and engine do not turn over.	
	☐ no fuel flow (☐ no fuel in tank, ☐ no fuel pump sound).	
	☐ no spark.	
	☐ other:	
Engine stalls	☐ right after starting.	
	☐ when opening throttle grip.	
	☐ when closing throttle grip.	
	☐ when moving off.	
	☐ when stopping the motorcycle.	
	☐ when cruising.	
	☐ other:	
Poor running at low speed	☐ very low idle speed, ☐ very high idle speed, ☐ rough idle speed.	
	☐ battery voltage is low (charge the battery).	
	☐ spark plug loose (tighten it).	
	☐ spark plug dirty, broken, or gap maladjusted (remedy it).	
	☐ backfiring.	
	☐ afterfiring.	
	☐ hesitation when acceleration.	
	☐ engine oil viscosity too high.	
	☐ brake dragging.	
	☐ engine overheating.	
	☐ clutch slipping.	
	☐ other:	

Downloaded from www.vulcanriders-sweden.org

Troubleshooting the DFI System

Poor running or no power at high speed	☐ spark plug loose (tighten it).
	☐ spark plug dirty, broken, or gap maladjusted (remedy it).
	☐ spark plug incorrect (replace it).
	☐ knocking (fuel poor quality or incorrect, → use high-octane gasoline).
	☐ brake dragging.
	☐ clutch slipping.
	☐ engine overheating.
	☐ engine oil level too high.
	☐ engine oil viscosity too high.
	☐ other:

Downloaded from www.vulcanriders-sweden.org

DFI System Troubleshooting Guide

NOTE

- *This is not an exhaustive list, giving every possible cause for each problem listed. It is meant simply as a rough guide to assist the troubleshooting for some of the more common difficulties in DFI system.*
- *The ECU may be involved in the DFI electrical, ETV and ignition system troubles. If these parts and circuits are checked out good, be sure to check the ECU for ground and power supply. If the ground and power supply are checked good, replace the ECU.*

Engine Won't Turn Over

Symptoms or possible Causes	Actions (chapter)
Gear Position, starter lockout or sidestand switch trouble	Inspect each switch (see chapter 16).
Vehicle-down sensor operated	Turn ignition switch OFF (see chapter 3).
Vehicle-down sensor trouble	Inspect (see chapter 3).
Crankshaft sensor trouble	Inspect (see chapter 16).
Ignition coil shorted or not in good contact	Inspect or Reinstall (see chapter 16).
Ignition coil trouble	Inspect (see chapter 16).
Spark plug dirty, broken or gap maladjusted	Inspect and replace (see chapter 2).
Spark plug incorrect	Replace it with the correct plug (see chapter 2).
ECU ground and power supply trouble	Inspect (see chapter 3).
ECU trouble	Inspect (see chapter 3).
No or little fuel in tank	Supply fuel (see Owner's Manual).
Fuel injector trouble	Inspect and replace (see chapter 3).
Fuel pump not operating	Inspect (see chapter 3).
Fuel pump relay trouble	Inspect and replace (see chapter 3).
Fuel filter clogged	Inspect and replace fuel pump (see chapter 3).
Fuel pressure regulator trouble	Inspect fuel pressure and replace fuel pump (see chapter 3).
Fuel line clogged	Inspect and repair (see chapter 3).

Poor Running at Low Speed

Symptoms or Possible Causes	Actions (chapter)
Spark weak:	
Ignition coil shorted or not in good contact	Inspect or reinstall (see chapter 16).
Ignition coil trouble	Inspect (see chapter 16).
Spark plug dirty, broken or gap maladjusted	Inspect and replace (see chapter 2).
Spark plug incorrect	Replace it with the correct plug (see chapter 2).
ECU trouble	Inspect (see chapter 3).
Fuel/air mixture incorrect:	
Little fuel in tank	Supply fuel (see Owner's Manual).
Air cleaner clogged, poorly sealed, or missing	Clean element or inspect sealing (see chapter 2).
Inlet Manifold loose	Reinstall (see chapter 3).
Throttle body assy loose	Reinstall (see chapter 3).
Throttle body assy dust seal damage	Replace (see chapter 3).
Fuel injector O-ring damage	Replace (see chapter 3).
Fuel filter clogged	Inspect and replace fuel pump (see chapter 3).

Downloaded from www.vulcanriders-sweden.org

DFI System Troubleshooting Guide

Symptoms or Possible Causes	Actions (chapter)
Fuel pressure regulator trouble	Inspect fuel pressure and replace fuel pump (see chapter 3).
Fuel line clogged	Inspect and repair (see chapter 3).
Inlet air pressure sensor trouble	Inspect (see chapter 3).
Water temperature sensor trouble	Inspect (see chapter 3).
Inlet air temperature sensor trouble	Inspect (see chapter 3).
Accelerator position sensor trouble	Inspect (see chapter 3).
Throttle position sensor trouble	Inspect (see chapter 3).
ETV actuator trouble	Inspect (see chapter 3).
Unstable (rough) idling:	
Fuel pressure too low or too high	Inspect (see chapter 3).
Fuel injector trouble	Inspect (see chapter 3).
Accelerator position sensor trouble	Inspect (see chapter 3).
Throttle position sensor trouble	Inspect (see chapter 3).
ETV actuator trouble	Inspect (see chapter 3).
Inlet air pressure sensor trouble	Inspect (see chapter 3).
Water temperature sensor trouble	Inspect (see chapter 3).
Inlet air temperature sensor trouble	Inspect (see chapter 3).
Engine stalls easily:	
Spark plug dirty, broken or gap maladjusted	Inspect and replace (see chapter 2).
Ignition coil trouble	Inspect (see chapter 16).
Accelerator position sensor trouble	Inspect (see chapter 3).
Throttle position sensor trouble	Inspect (see chapter 3).
ETV actuator trouble	Inspect (see chapter 3).
Inlet air pressure sensor trouble	Inspect (see chapter 3).
Water temperature sensor trouble	Inspect (see chapter 3).
Inlet air temperature sensor trouble	Inspect (see chapter 3).
Fuel pump trouble	Inspect (see chapter 3).
Fuel injector trouble	Inspect (see chapter 3).
Fuel pressure too low or too high	Inspect (see chapter 3).
Fuel pressure regulator trouble	Inspect fuel pressure and replace fuel pump (see chapter 3).
Fuel line clogged	Inspect and repair (see chapter 3).
Poor acceleration:	
Fuel pressure too low	Inspect (see chapter 3).
Water or foreign matter in fuel	Change fuel. Inspect and clean fuel system (see chapter 3).
Fuel filter clogged	Inspect and replace fuel pump (see chapter 3).
Fuel pump trouble	Inspect (see chapter 3).
Fuel injector trouble	Inspect (see chapter 3).
Accelerator position sensor trouble	Inspect (see chapter 3).
Throttle position sensor trouble	Inspect (see chapter 3).
ETV actuator trouble	Inspect (see chapter 3).
Inlet air pressure sensor trouble	Inspect (see chapter 3).
Water temperature sensor trouble	Inspect (see chapter 3).

Downloaded from www.vulcanriders-sweden.org

DFI System Troubleshooting Guide

Symptoms or Possible Causes	Actions (chapter)
Inlet air temperature sensor trouble	Inspect (see chapter 3).
Spark plug dirty, broken or gap maladjusted	Inspect and replace (see chapter 2).
Ignition coil trouble	Inspect (see chapter 16).
Stumble:	
Fuel pressure too low	Inspect (see chapter 3).
Fuel injector trouble	Inspect (see chapter 3).
Accelerator position sensor trouble	Inspect (see chapter 3).
Throttle position sensor trouble	Inspect (see chapter 3).
ETV actuator trouble	Inspect (see chapter 3).
Inlet air pressure sensor trouble	Inspect (see chapter 3).
Water temperature sensor trouble	Inspect (see chapter 3).
Inlet air temperature sensor trouble	Inspect (see chapter 3).
Surge:	
Unstable fuel pressure	Fuel pressure regulator trouble (Inspect and replace fuel pump) or kinked fuel line (Inspect and replace fuel pump) (see chapter 3).
Fuel injector trouble	Inspect (see chapter 3).
Water temperature sensor trouble	Inspect (see chapter 3).
Backfiring when deceleration:	
Spark plug dirty, broken or gap maladjusted	Inspect and replace (see chapter 2).
Fuel pressure too low	Inspect (see chapter 3).
Fuel pump trouble	Inspect (see chapter 3).
Accelerator position trouble	Inspect (see chapter 3).
Throttle position sensor trouble	Inspect (see chapter 3).
ETV actuator trouble	Inspect (see chapter 3).
Inlet air pressure sensor trouble	Inspect (see chapter 3).
Water temperature sensor trouble	Inspect (see chapter 3).
Inlet air temperature sensor trouble	Inspect (see chapter 3).
Air switching valve trouble	Inspect and replace (see chapter 16).
Air suction valve trouble	Inspect and replace (see chapter 5).
After fire:	
Spark plug burned or gap maladjusted	Replace (see chapter 2).
Fuel injector trouble	Inspect (see chapter 3).
Inlet air pressure sensor trouble	Inspect (see chapter 3).
Water temperature sensor trouble	Inspect (see chapter 3).
Inlet air temperature sensor trouble	Inspect (see chapter 3).
Other:	
Intermittent any DFI fault and its recovery	Check that DFI connectors are clean and tight, and examine leads for signs of burning or fraying (see chapter 3).

Poor Running or No Power at High Speed:

Symptoms or Possible Causes	Actions (chapter)
Firing incorrect:	
Ignition coil shorted or not in good contact	Inspect or Reinstall (see chapter 16).

Downloaded from www.vulcanriders-sweden.org

DFI System Troubleshooting Guide

Symptoms or Possible Causes	Actions (chapter)
Ignition coil trouble	Inspect (see chapter 16).
Spark plug dirty, broken or gap maladjusted	Inspect and replace (see chapter 2).
Spark plug incorrect	Replace it with the correct plug (see chapter 2).
ECU trouble	Inspect (see chapter 3).
Fuel/air mixture incorrect:	
Air cleaner clogged, poorly sealed, or missing	Clean element or inspect sealing (see chapter 2).
Inlet manifold loose	Reinstall (see chapter 3).
Throttle body assy loose	Reinstall (see chapter 3).
Throttle body assy dust seal damage	Replace (see chapter 3).
Water or foreign matter in fuel	Change fuel. Inspect and clean fuel system (see chapter 3).
Fuel injector O-ring damage	Replace (see chapter 3).
Fuel injector clogged	Inspect and repair (see chapter 3).
Fuel line clogged	Inspect and repair (see chapter 3).
Fuel pump operates intermittently and often DFI fuse blows.	Fuel pump bearings may wear. Replace the fuel pump (see chapter 3).
Fuel pump trouble	Inspect (see chapter 3).
Inlet air pressure sensor trouble	Inspect (see chapter 3).
Cracked or obstructed inlet air pressure sensor vacuum hose	Inspect and repair or replace (see chapter 3).
Water temperature sensor trouble	Inspect (see chapter 3).
Inlet air temperature sensor trouble	Inspect (see chapter 3).
Accelerator position sensor trouble	Inspect (see chapter 3).
Throttle position sensor trouble	Inspect (see chapter 3).
ETV actuator trouble	Inspect (see chapter 3).
Knocking:	
Fuel poor quality or incorrect	Fuel change (Use the gasoline recommended in the Owner's Manual).
Spark plug incorrect	Replace it with the correct plug (see chapter 2).
Ignition coil trouble	Inspect (see chapter 16).
ECU trouble	Inspect (see chapter 3).
Engine vacuum not synchronizing	Inspect and adjust (see chapter 2).
Inlet air pressure sensor trouble	Inspect (see chapter 3).
Water temperature sensor trouble	Inspect (see chapter 3).
Inlet air temperature sensor trouble	Inspect (see chapter 3).
Miscellaneous:	
Speed sensor trouble	Inspect (see chapter 3).
Throttle valves will not fully open	Inspect throttle cables and ETV system (see chapter 3).
Engine overheating - Water temperature sensor, crankshaft sensor or speed sensor trouble	(see Overheating of Troubleshooting Guide in chapter 17)
Air switching valve trouble	Inspect and replace (see chapter 16).
Air suction valve trouble	Inspect and replace (see chapter 5).
Exhaust Smokes Excessively:	
(Black smokes)	

Downloaded from www.vulcanriders-sweden.org

DFI System Troubleshooting Guide

Symptoms or Possible Causes	Actions (chapter)
Air cleaner element clogged	Clean element (see chapter 2).
Fuel pressure too high	Inspect (see chapter 3).
Fuel injector trouble	Inspect (see chapter 3).
Water temperature sensor trouble	Inspect (see chapter 3).
Inlet air temperature sensor trouble	Inspect (see chapter 3).
(Brown smoke)	
Air duct loose	Reinstall (see chapter 3).
Fuel pressure too low	Inspect (see chapter 3).
Water temperature sensor trouble	Inspect (see chapter 3).
Inlet air temperature sensor trouble	Inspect (see chapter 3).

Downloaded from www.vulcanriders-sweden.org

Self-Diagnosis

The warning indicator light (LED) [A] is used for the FI/ETV (Electrical Throttle Valve) indicator, oil pressure warning indicator and water temperature warning indicator.

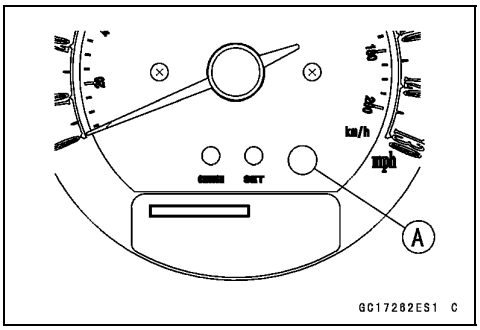

Self-diagnosis Outline

The ECU notifies the rider of troubles in DFI system, ignition system and EVT system by lighting up or blinking the warning indicator light (LED) [A] and displaying the “Error” segments [B], service code [C] and FI warning symbol [D] on the LCD (Liquid Crystal Display) when DFI, ignition and ETV system parts are faulty, and initiates fail-safe function. In case of serious troubles ECU stops the injection/ignition/starter motor operation.

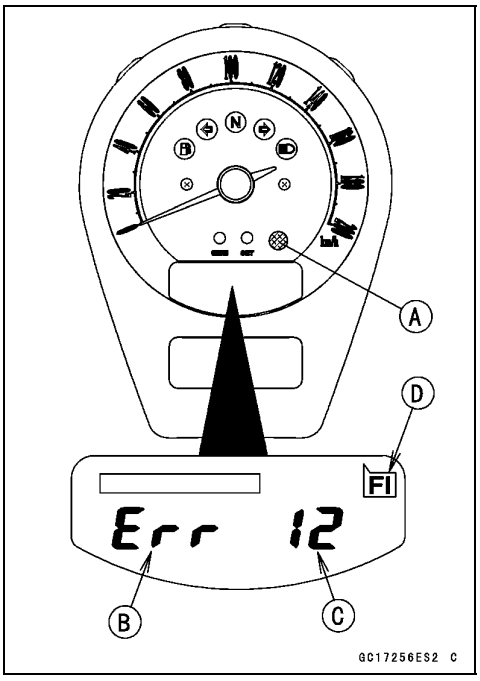

Self-diagnosis Procedures

○When problem occurs with DFI system, the warning indicator light (LED) [A] goes on and the “Error” segments [B], service code [C] and FI warning symbol [D] are displayed on the LCD (Liquid Crystal Display) to alert the rider. The service code is displayed by the number of two digits.

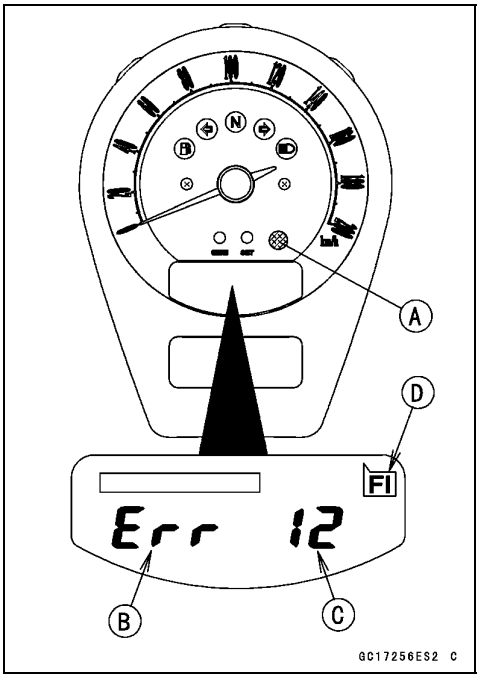

Downloaded from www.vulcanriders-sweden.org

Self-Diagnosis

○When problem occurs with ETV (Electrical Throttle Valve) system, the warning indicator light (LED) [A] blinks and the “Error” segments [B], service code [C] and FI warning symbol [D] are displayed on the LCD (Liquid Crystal Display) to alert the rider. The service code is displayed by the number of two digits.

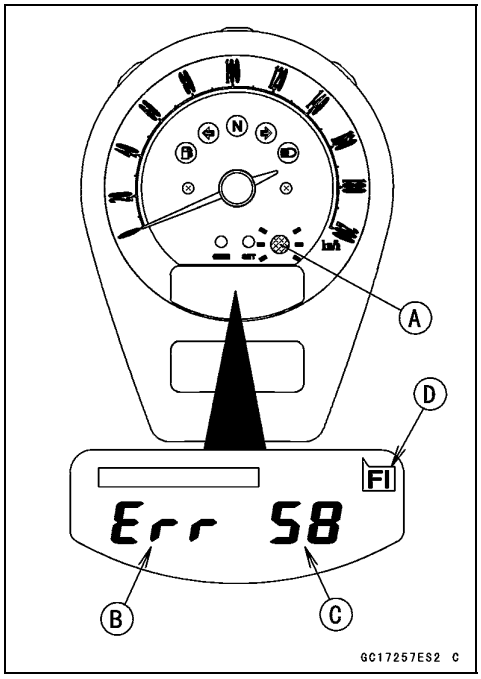

- Turn the ignition switch ON.
- The service code [A] is displayed by the number of two digits.
- When pushing the “S” button [B] of the right switch housing for more than two seconds while the “Error” segments [C], service code and FI warning symbol [D] are displayed on the LCD, the display on the LCD is switched to the normal display. But, the warning indicator light (LED) [E] goes on or blinks and the FI warning symbol is displayed.

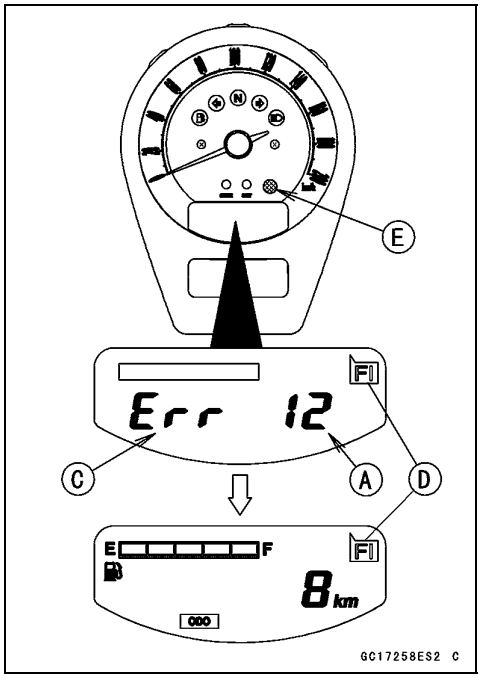

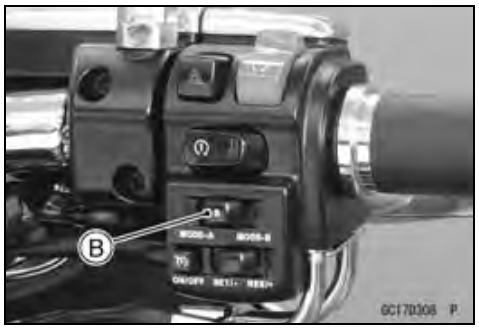

Downloaded from www.vulcanriders-sweden.org

Self-Diagnosis

● After switching to the normal display, the service code can be displayed again by the following procedures.
○Push the “S” button of the right switch housing for more than two seconds to display the clock setting mode [A] on the LCD.
○Push the “S” button to display the service code [B].

NOTE

○*The display change to the clock setting mode, average fuel consumption unit setting mode [C], service code display each time the “S” button is pressed.*

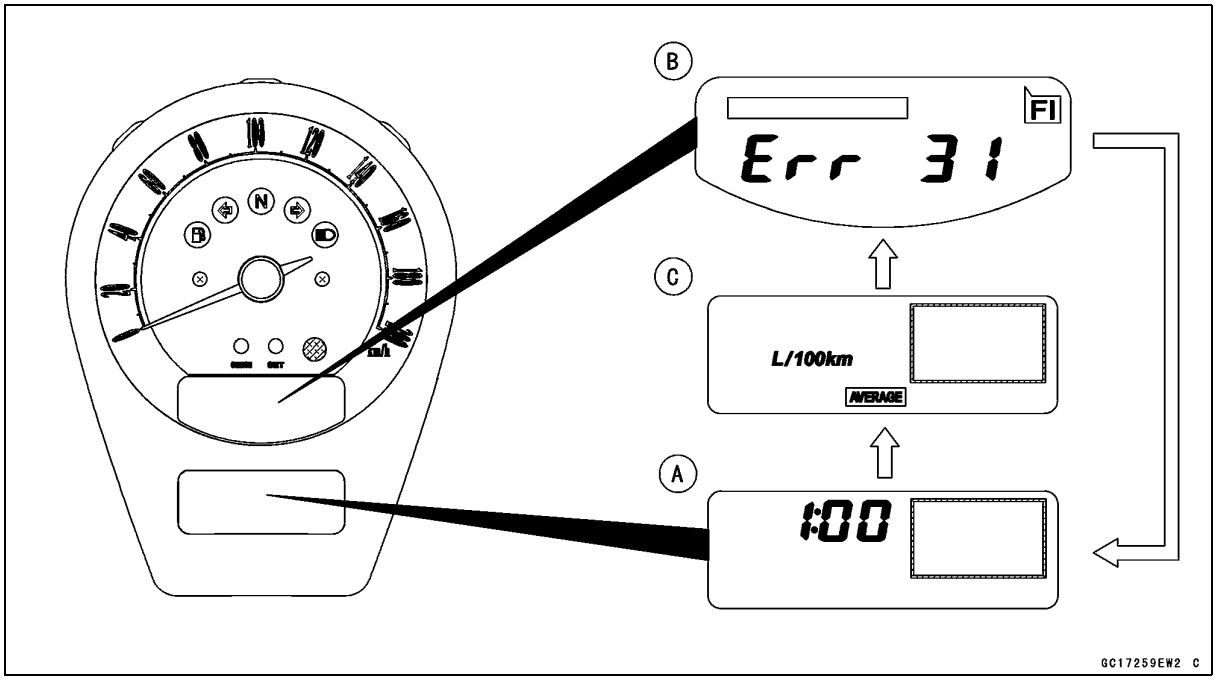

● Any of the following procedures ends self-diagnosis.
○Push the “S” button for more than two seconds.
○When the ignition switch is turned OFF.

Downloaded from www.vulcanriders-sweden.org

Self-Diagnosis

Self-Diagnosis Flow Chart

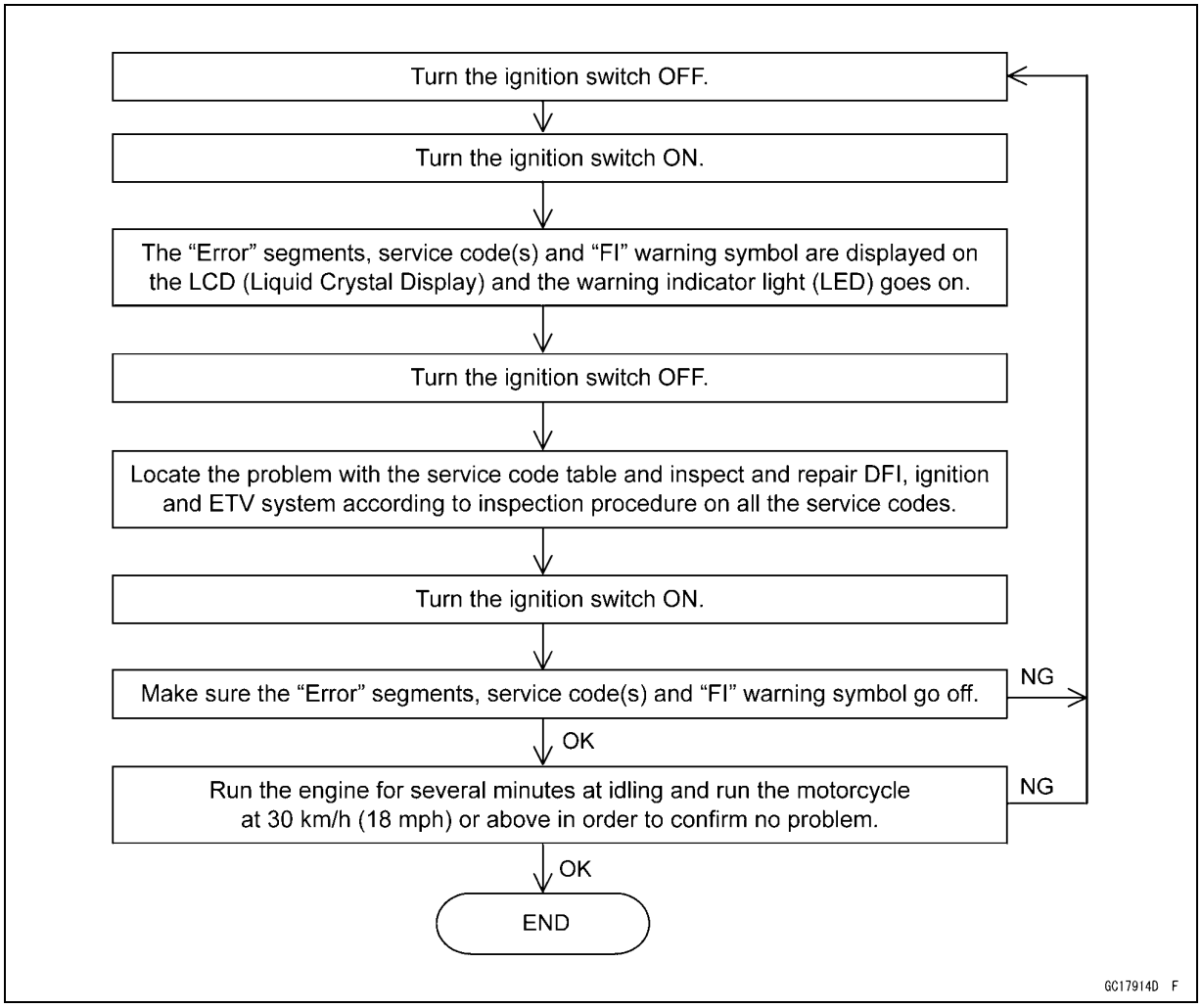

Downloaded from www.vulcanriders-sweden.org

Self-Diagnosis

Service Code Reading

○The service code(s) is displayed on the LCD by the number of two digits.

○When there are a number of problems, all the service codes can be stored and the display will begin starting from the lowest number service code in the numerical order.

○Then after completing all codes, the display is repeated until the ignition switch is pushed OFF or “S” button is pushed for more than two seconds.

○For example, if three problems occurred in the order of 31, 11, 21, the service codes are displayed (each two seconds) from the lowest number in the order listed as shown below. (11→21→31)→(11→21→31)→· · ·(repeated)

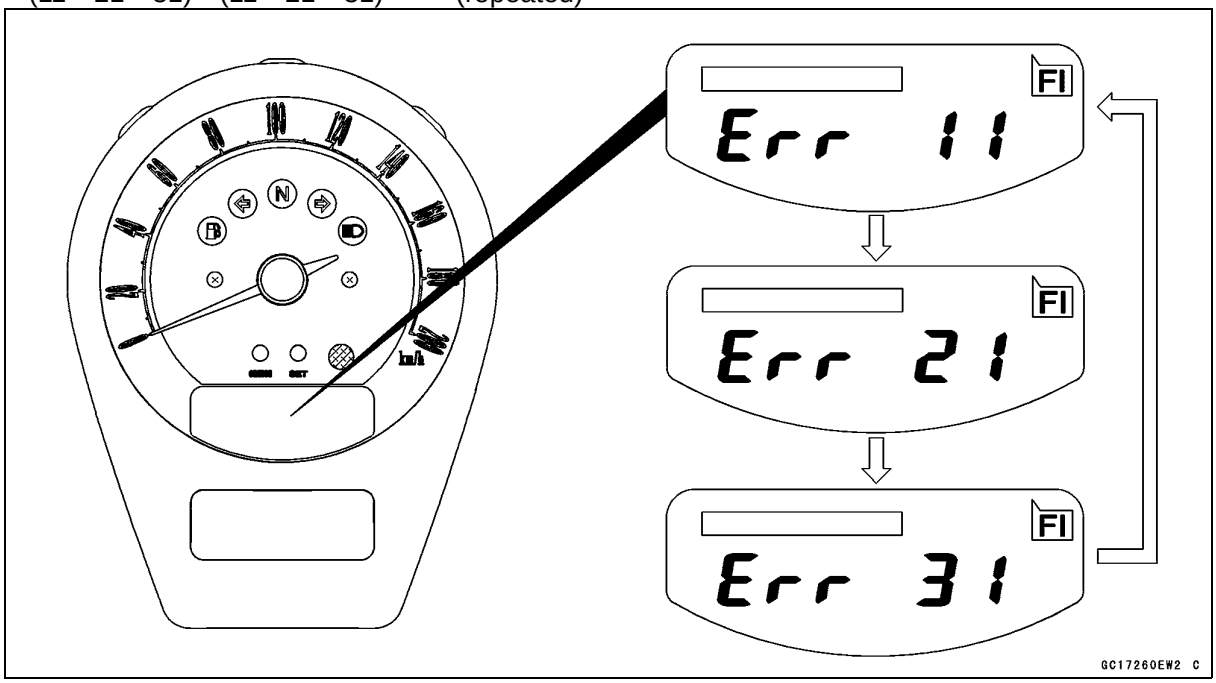

○If there is no problem or when the repair has been done, when repair has been done, the "Error" segments, service code and FI warning symbol go off (return to the normal display).

Service Code Erasing

○When repair has been done, the "Error" segments, service code and FI warning symbol go off (return to the normal display).

★But the service codes stored in memory of the ECU are not erased to preserve the problem history. In this model, the problem history can not be erased.

Downloaded from www.vulcanriders-sweden.org

Self-Diagnosis

Service Code Table

Service Code	System	Problems
11	ETV	Throttle position sensor malfunction, wiring open or short.
12	DFI	Inlet air pressure sensor malfunction, wiring open or short.
13	DFI	Inlet air temperature sensor malfunction, wiring open or short.
14	DFI	Water temperature sensor malfunction, wiring open or short.
18	ETV	Accelerator position sensor malfunction, wiring open or short.
21	DFI	Crankshaft sensor malfunction, wiring open or short.
24	DFI	Speed sensor malfunction, wiring open or short.
25	DFI	Gear position switch malfunction, wiring open or short.
31	DFI	Vehicle-down sensor malfunction, wiring open or short.
33	DFI	Oxygen sensor inactivation, wiring open or short (Equipped Models).
46	DFI	Fuel pump relay malfunction, relay is stuck.
49	ETV	Return spring malfunction.
51	DFI	Ignition coil #1 (Front Cylinder) malfunction, wiring open or short.
52	DFI	Ignition coil #2 (Rear Cylinder) malfunction, wiring open or short.
56	DFI	Radiator fan relay malfunction, wiring open or short.
58	ETV	ETV actuator malfunction, wiring open or short.
64	DFI	Air switching valve malfunction, wiring open or short.
67	DFI	Oxygen sensor heater malfunction, wiring open or short (Equipped Models).
97	ETV	Battery monitor voltage is low.
98	ETV	ECU/ETV circuit malfunction, wiring open or short.

Notes:

- The ECU may be involved in these problems. If all the parts and circuits checked out good, be sure to check the ECU for ground and power supply. If the ground and power supply are checked good, replace the ECU.
- When no service code is displayed, the electrical parts of the DFI system and ETV system have no fault, and the mechanical parts of the DFI system or ETV system and the engine are suspect.

Downloaded from www.vulcanriders-sweden.org

Self-Diagnosis

Backups

○The ECU takes the following measures to prevent engine damage when the DFI, ignition or ETV system parts have troubles.

Service Codes	Parts	Output Signal Usable Range or Criteria	Backups by ECU
11	Throttle Position Sensor	Output Voltage (full throttle opening) (1) 3.50 ~ 3.90 V (2) 4.50 ~ 4.80 V	If both throttle position sensor 1 and 2 fail, the ECU sets the DFI in the D-J method(*1) and sets to the Limp Home Mode(*2). If either sensor fails, the ECU sets to the Power Limitation Mode(*3).
12	Inlet Air Pressure Sensor	Inlet Air Pressure (Absolute) Pv = 50 ~ 910 mmHg	If the inlet air pressure sensor system fails (the signal is out of the usable range, wiring short or open), the ECU sets the DFI in the α-N method (*4).
13	Inlet Air Temperature Sensor	Inlet Air Temperature Ta = – 30 ~ + 120°C	If the inlet air temperature sensor system fails (the signal is out of the usable range, wiring short or open), the ECU sets Ta at 30°C.
14	Water Temperature Sensor	Water Temperature Tw = – 30 ~ + 120°C	If the water temperature sensor system fails (the signal is out of the usable range, wiring short or open), the ECU sets Tw at 80°C and the radiator fan operates.
18	Accelerator Position Sensor	Output Voltage (1) 0.50 ~ 4.75 V (2) 0.35 ~ 4.75 V	If both accelerator position sensor 1 and 2 fail, the ECU sets to the idle speed. If either sensor fails, the ECU sets to the Power Limitation Mode.
21	Crankshaft Sensor	Crankshaft sensor must send 18 signals to the ECU at the 1 cranking.	If the crankshaft sensor fails, the engine stops by itself.
24	Speed Sensor	Speed sensor must send 29 signals to the ECU at the 1 rotation of the output shaft.	If the speed sensor system fails (no signal, wiring short or open), the speedometer shows 0.
25	Gear Position Switch	Output Voltage 0.2 ~ 4.8 V	If the gear position switch system fails (no signal, wiring short or open), the ECU set the top (6th) gear position.
31	Vehicle -down Sensor	Output Voltage 0.2 ~ 4.8 V	If the vehicle-down sensor system has failures (the output voltage is out of the usable range, wiring short or open), the ECU shuts off the fuel pump relay, the fuel injectors and the ignition system.
33	Oxygen Sensor (Equipped Models)	The oxygen sensor is active and sensor must send signals (output voltage) continuously to the ECU.	If the oxygen sensor is not activated, the ECU stops the current to the heater and feedback mode of the oxygen sensor.
46	Fuel Pump Relay	When the relay ON condition, battery monitor voltage 5 V or more	–
49	Return Spring	TPS Output Voltage (default position of the throttle valve by learning function) 4 V or more	–

Downloaded from www.vulcanriders-sweden.org

Self-Diagnosis

Service Codes	Parts	Output Signal Usable Range or Criteria	Backups by ECU
51	Ignition Coil #1 (Front Cylinder)	—	If the ignition coil #1 primary winding has failures (wiring short or open), the ECU shuts off the injector #1 to stop fuel to the cylinder #1, though the engine keeps running.
52	Ignition Coil #2 (Rear cylinder)	—	If the ignition coil #2 primary winding has failures (wiring short or open), the ECU shuts off the injector #2 to stop fuel to the cylinder #2, though the engine keeps running.
56	Radiator Fan Relay	When the relay OFF condition, the fan relay is open.	If the radiator fan relay fails, the ECU shuts off the relay.
58	ETV Actuator	The actuator operates open and close of the throttle valve by the pulse signal from the ECU.	If the ETV actuator fails (the signal is out to the usable range, wiring short or open), the ECU stops the current to the actuator, and sets to the Limp Home Mode.
64	Air Switching Valve	The air switching valve controls the flow of the secondary air by opening and shutting the solenoid valve.	If the air switching valve fails, the ECU stops the air switching valve control.
67	Oxygen Sensor Heater (Equipped Models)	The oxygen sensor heater raises temperature of the sensor for its earlier activation.	If the oxygen sensor heater fails (wiring short or open), the ECU stops the current to the heater and the feedback mode of the oxygen sensor.
97	Battery	The ECU monitors the battery voltage when the fuel pump operates. Detection Voltage: less than 6.3 V	The ECU sets to the Limp Home Mode.
98	ETV Control Circuit	—	The ECU sets to the Limp Home Mode.

Note:

(*1) D-J method: When the engine load is light like at idling or low speed, the ECU determines the injection quantity by calculating from the throttle vacuum (inlet air pressure sensor output voltage) and engine speed (crankshaft sensor output voltage).

(*2) Limp Home Mode: ETV is not operational. Power controls by ignition timing.

(*3) Power Limitation Mode: ETV is operational condition by redundant system.

(*4) α-N method: As the engine speed increases, and the engine load turns middle to heavy, the ECU determines the injection quantity by calculating from the throttle opening (throttle position sensor output voltage) and the engine speed.

Downloaded from www.vulcanriders-sweden.org

Throttle Position Sensor (Service Code 11)

Throttle Position Sensor Removal

CAUTION

Do not remove throttle position sensor in the gear case [A] since it has been adjusted and set with precision at the factory.
Never drop the throttle body assy, especially on a hard surface. Such a shock to the throttle position sensor can damage it.

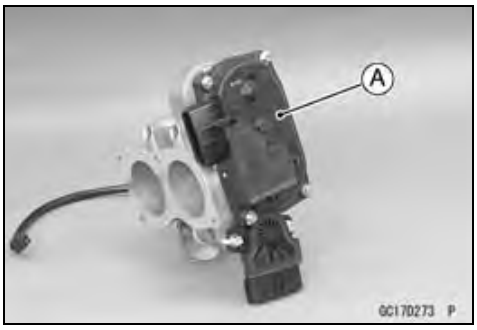

Throttle Position Sensor Output Voltage Inspection

NOTE

○*Be sure the battery is fully charged.*

- Turn the ignition switch OFF.
- Remove:
  Front Seat (see Front Seat Removal in the Frame chapter)
  Battery Case Cover (see Battery Removal in the Electrical System chapter)
- Connect the digital meter to the connector [A] with the needle adapter set.

Special Tool - Needle Adapter Set: 57001-1457

Throttle Position Sensor Output Voltage Connection:

(1) Digital Meter (+) → G/R lead (ECU terminal 68)
Digital Meter (−) → O/BK lead (ECU terminal 56)

(2) Digital Meter (+) → G/Y lead (ECU terminal 57)
Digital Meter (−) → O/BK lead (ECU terminal 56)



- Turn the ignition switch ON.
- Measure the output voltage with full throttle opened.

Output Voltage

Standard: (1) DC 3.50 ~ 3.90 V at full throttle opening (for reference)

(2) DC 4.50 ~ 4.80 V at full throttle opening (for reference)

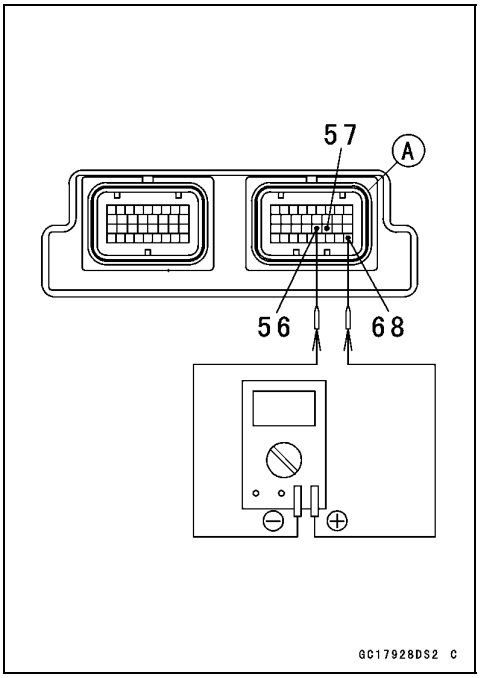

NOTE

○*Open the throttle, confirm the output voltage will be raise.*
○*When the throttle is ordinary position, the standard value is not determined because there is some uncertain elements, e.g. water temperature, throttle valve initial opening, etc.*

- Turn the ignition switch OFF.

★If the reading is out of the standard, check the input voltage (see Throttle Position Sensor Input Voltage Inspection).
★If the reading is within the standard, replace the ECU (see ECU Removal/Installation).

Downloaded from www.vulcanriders-sweden.org

Throttle Position Sensor (Service Code 11)

Throttle Position Sensor Input Voltage Inspection

NOTE

○*Be sure the battery is fully charged.*

- Turn the ignition switch OFF.
- Remove:
  Front Seat (see Front Seat Removal in the Frame chapter)
  Battery Case Cover (see Battery Removal in the Electrical System chapter)

- Connect the digital meter to the connector [A] with the needle adapter set.

Special Tool - Needle Adapter Set: 57001-1457

Throttle Position Sensor Input Voltage Connection:

Digital Meter (+) → BL/R lead (ECU terminal 49)

Digital Meter (−) → O/BK lead (ECU terminal 56)

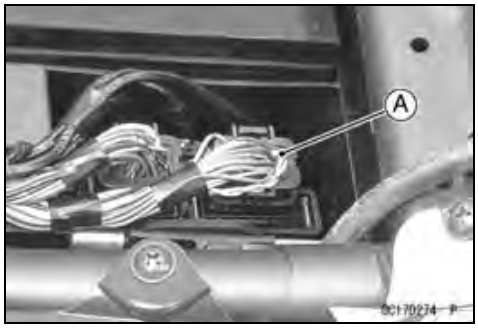

- Turn the ignition switch ON.
- Measure the input voltage.

Input Voltage
Standard: DC 4.75 ~ 5.25 V

- Turn the ignition switch OFF.

★If the reading is out of the standard, replace the ECU (see ECU Removal/Installation).

★If the reading is within the standard, check the wiring for continuity between the main harness connectors according to the following procedure.

- Remove:
  Right Air Cleaner Housing (see Right Air Cleaner Housing Removal)

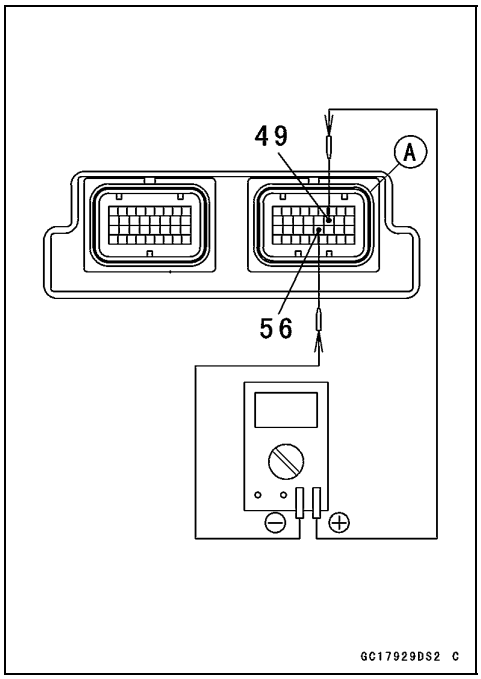

- Disconnect the throttle position sensor connector [A].
- Set the hand tester to the × 1 Ω range and check the wiring for continuity.

Special Tool - Hand Tester: 57001-1394

★If the wiring is good, replace the throttle body assy (see Throttle Body Assy Removal/Installation).

★If the wiring is not good, replace the main harness.

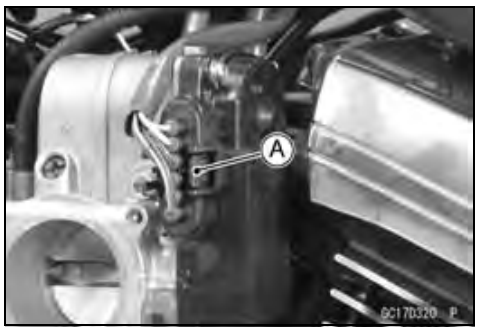

Downloaded from www.vulcanriders-sweden.org

Throttle Position Sensor (Service Code 11)

Throttle Position Sensor Circuit

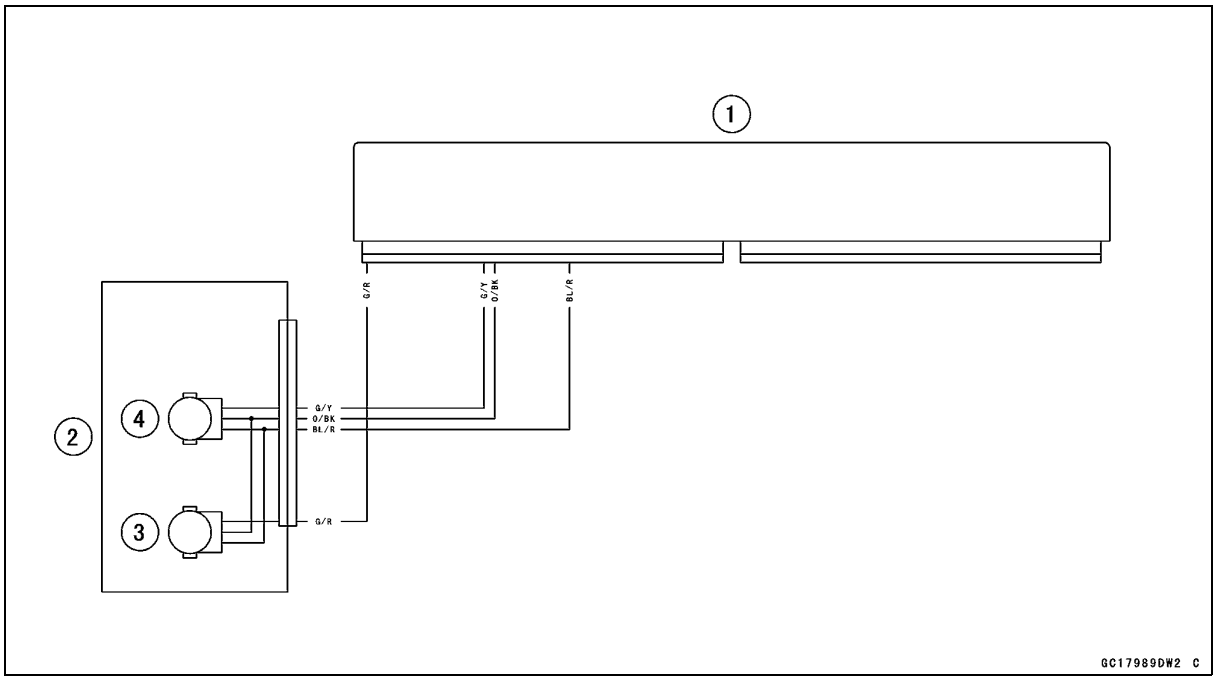

1. ECU
2. Throttle Position Sensor/ETV Actuator
3. Throttle Position Sensor 1
4. Throttle Position Sensor 2

Downloaded from www.vulcanriders-sweden.org

Inlet Air Pressure Sensor (Service Code 12)

Inlet Air Pressure Sensor Removal

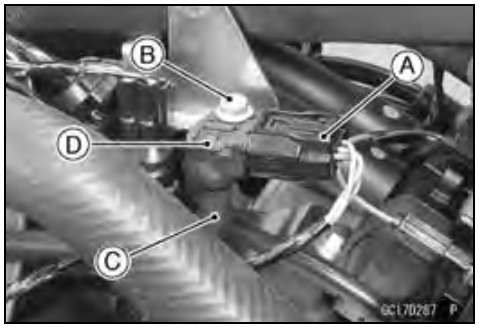

CAUTION

Never drop the inlet air pressure sensor, especially on a hard surface. Such a shock to the sensor can damage it.

- Remove:
  Fuel Tank (see Fuel Tank Removal)
  Inlet Air Pressure Sensor Connector [A]
  Inlet Air Pressure Sensor Bolt [B]
- Separate the vacuum hose [C] and remove the inlet air pressure sensor [D].

Inlet Air Pressure Sensor Installation

- Installation is basically the reverse of removal.

Inlet Air Pressure Sensor Input Voltage Inspection

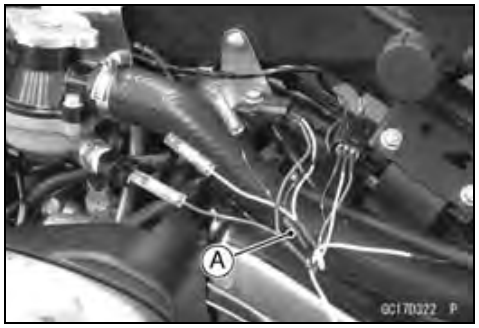

NOTE

○*Be sure the battery is fully charged.*

- Turn the ignition switch OFF.
- Remove the fuel tank (see Fuel Tank Removal).
- Disconnect the inlet air pressure sensor connector and connect the measuring adapter [A] between these connectors as shown in the figure.
  Main Harness [B]
  Inlet Air Pressure Sensor [C]

Special Tool - Measuring Adapter: 57001-1700

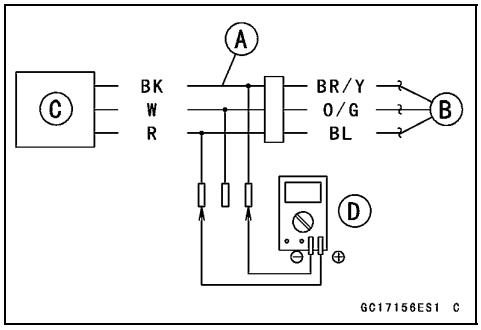

- Connect a digital meter [D] to the measuring adapter leads.

Inlet Air Pressure Sensor Input Voltage
Connections to Adapter:
Digital Meter (+) → R (main harness BL) lead
Digital Meter (–) → BK (main harness BR/Y) lead

- Measure the input voltage with the engine stopped and with the connector joined.
- Turn the ignition switch ON.

Input Voltage
Standard: DC 4.75 ~ 5.25 V

- Turn the ignition switch OFF.

★If the reading is within the standard, check the output voltage (see Inlet Air Pressure Sensor Output Voltage Inspection).

Downloaded from www.vulcanriders-sweden.org

Inlet Air Pressure Sensor (Service Code 12)

★If the reading is out of the standard, remove the ECU and check the wiring for continuity between main harness connectors.

Special Tool - Hand Tester: 57001-1394

○Disconnect the ECU and sensor connectors.

Wiring Continuity Inspection
ECU Connector [A] ←→
Inlet Air Pressure Sensor Connector [B]
BL lead (ECU terminal 48) [C]
BR/Y lead (ECU terminal 55) [D]

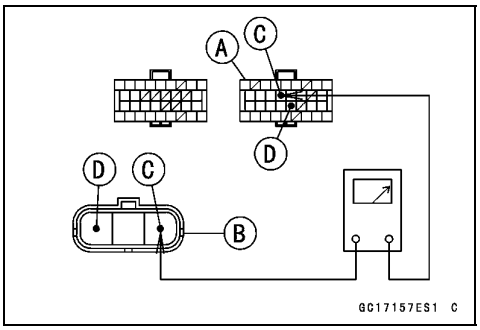

★If the wiring is good, check the ECU for its ground and power supply (see ECU Power Supply Inspection).
★If the ground and power supply are good, replace the ECU (see ECU Removal/Installation).

Inlet Air Pressure Sensor Output Voltage Inspection

● Measure the output voltage at the inlet air pressure sensor in the same way as input voltage inspection, note the following.
○Disconnect the inlet air pressure sensor connector and connect the measuring adapter [A] between these connectors as shown in the figure.
Main Harness [B]
Inlet Air Pressure Sensor [C]

Special Tool - Measuring Adapter: 57001-1700



Inlet Air Pressure Sensor Output Voltage
Connections to Adapter:
Digital Meter (+) → W (main harness O/G) lead
Digital Meter (–) → BK (main harness BR/Y) lead

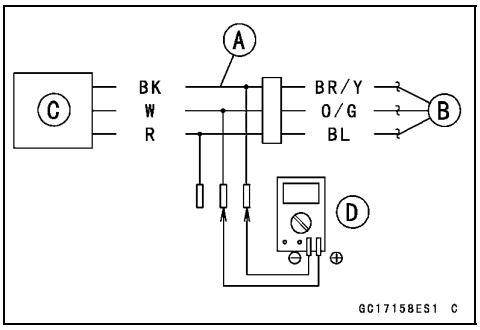

● Measure the output voltage with the engine stopped, and with the connector joined.
● Turn the ignition switch ON.

Output Voltage
Usable Range: **DC 3.80 ~ 4.20 V at standard atmospheric pressure (101.32 kPa, 76 cmHg)**

NOTE

○*The output voltage changes according to local atmospheric pressure.*

● Turn the ignition switch OFF.
★If the reading is out of the usable range, replace the sensor.

Downloaded from www.vulcanriders-sweden.org

Inlet Air Pressure Sensor (Service Code 12)

★If the reading is within the usable range, remove the ECU and check the wiring for continuity between main harness connector.

Special Tool - Hand Tester: 57001-1394

○Disconnect the ECU and sensor connectors.

Wiring Continuity Inspection
ECU Connector [A] ←→
Inlet Air Pressure Sensor Connector [B]
O/G lead (ECU terminal 46) [C]
BR/Y lead (ECU terminal 55) [D]

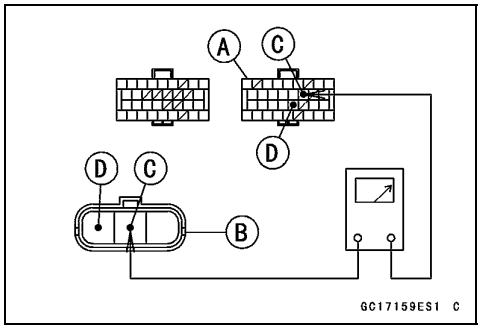

★If the wiring is good, check the sensor for various vacuum.
● Remove the inlet air pressure sensor [A] and disconnect the vacuum hose from the sensor.
● Connect an auxiliary hose [B] to the inlet air pressure sensor.
● Temporarily install the inlet air pressure sensor.
○Connect a digital meter [C], vacuum gauge [D], the fork oil level gauge [E] and the measuring adapter to the inlet air pressure sensor.

Special Tools - Fork Oil Level Gauge: 57001-1290
Vacuum Gauge: 57001-1369
Measuring Adapter: 57001-1700

Inlet Air Pressure Sensor Output Voltage
Connections to Adapter:
Digital Meter (+) → W (main harness O/G) lead
Digital Meter (–) → BK (main harness BR/Y) lead

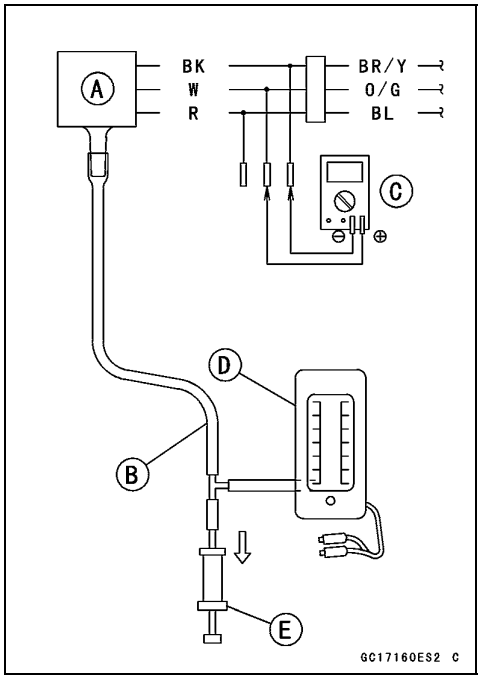

○Turn the ignition switch ON.
○Measure the inlet air pressure sensor output voltage from various vacuum readings, while pulling the handle of the fork oil level gauge.
○Check the inlet air pressure sensor output voltage, using the following formula and chart.

Suppose:
Pg: Vacuum Pressure (Gauge) of Throttle Body
Pl: Local Atmospheric Pressure (Absolute) measured by a barometer
Pv: Vacuum Pressure (Absolute) of Throttle Body
Vv: Sensor Output Voltage (V)

Downloaded from www.vulcanriders-sweden.org

Inlet Air Pressure Sensor (Service Code 12)

then
Pv = Pl – Pg

For example, suppose the following data is obtained:
Pg = 8 cmHg (Vacuum Gauge Reading)
Pl = 70 cmHg (Barometer Reading)
Vv = 3.2 V (Digital Meter Reading)

then
Pv = 70 – 8 = 62 cmHg (Absolute)

Plot this Pv (62 cmHg) at a point [1] on the chart and draw a vertical line through the point. Then, you can get the usable range [2] of the sensor output voltage.
Usable range = 3.08 ~ 3.48 V
Plot Vv (3.2 V) on the vertical line. → Point [3].
Results: In the chart, Vv is within the usable range and the sensor is normal.
★If the reading is out of the usable range, replace the sensor.
★If the reading is within the usable range, check the ECU for its ground and power supply (see ECU Power Supply Inspection).
★If the ground and power supply are good, replace the ECU (see ECU Removal/Installation).

Downloaded from www.vulcanriders-sweden.org

Inlet Air Pressure Sensor (Service Code 12)

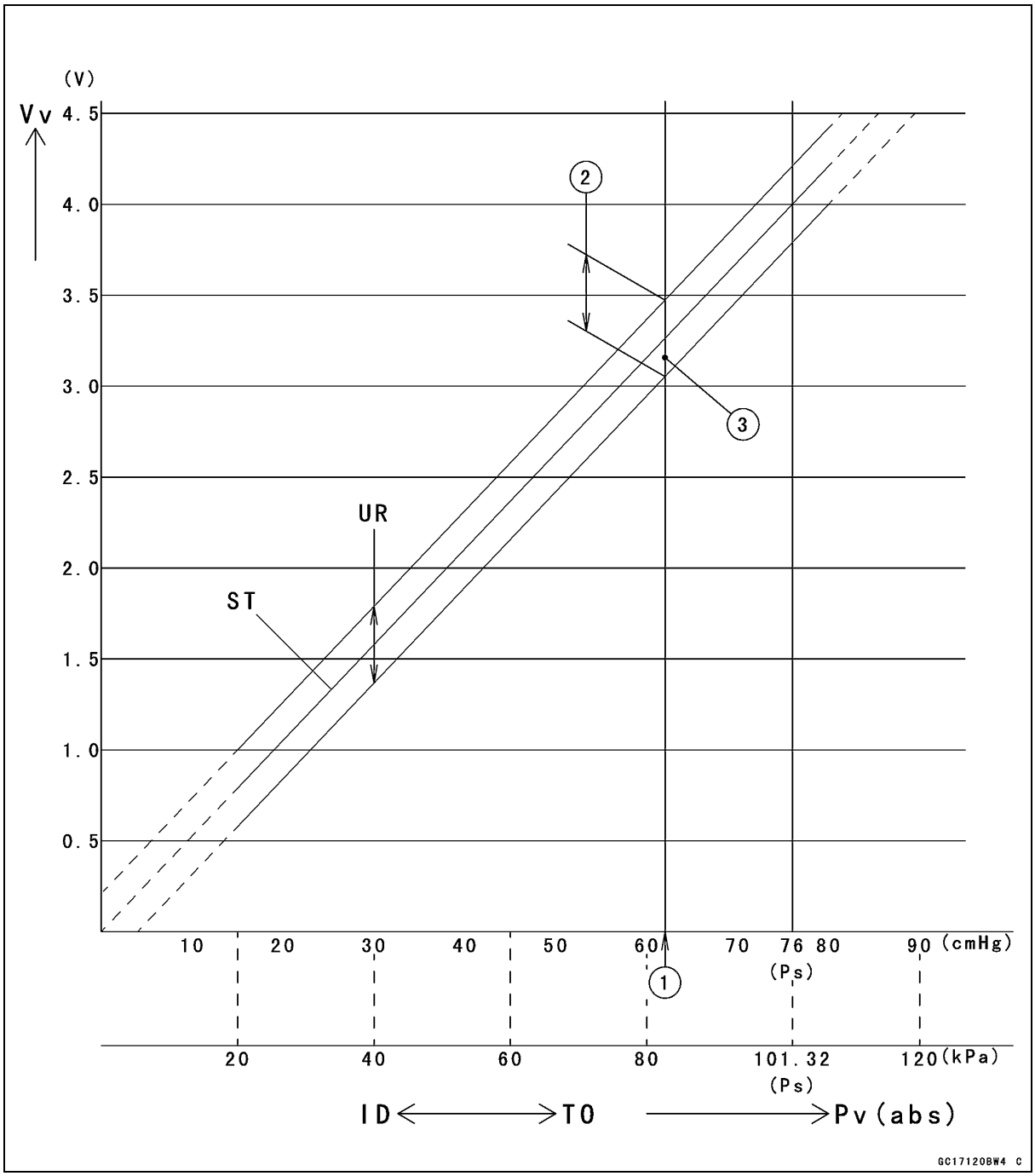

ID: Idling
Ps: Standard Atmospheric Pressure (Absolute)
Pv: Throttle Vacuum Pressure (Absolute)
ST: Standard of Sensor Output Voltage (V)
TO: Throttle Full Open
UR: Usable Range of Sensor Output Voltage (V)
Vv: Inlet Air Pressure Sensor Output Voltage (V) (Digital Meter Reading)

Downloaded from www.vulcanriders-sweden.org

Inlet Air Pressure Sensor (Service Code 12)

Inlet Air Pressure Sensor Circuit

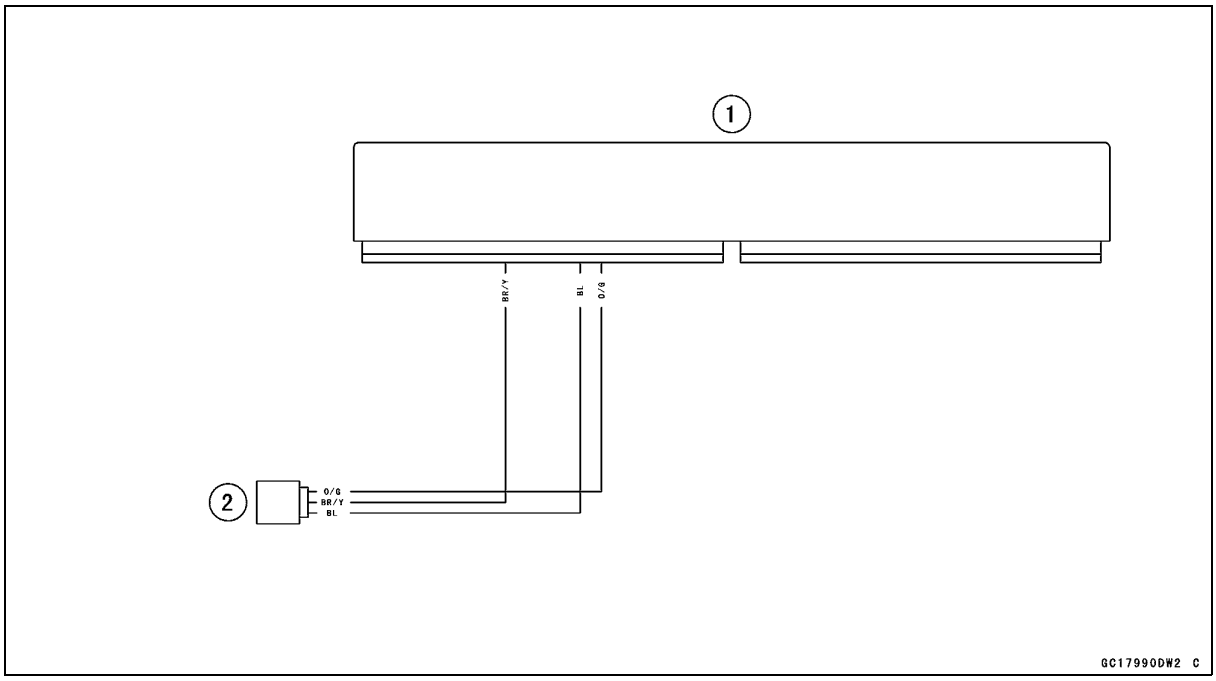

1. ECU
2. Inlet Air Pressure Sensor

Downloaded from www.vulcanriders-sweden.org

Inlet Air Temperature Sensor (Service Code 13)

Inlet Air Temperature Sensor Removal/Installation

CAUTION

Never drop the inlet air temperature sensor, especially on a hard surface. Such a shock to the sensor can damage it.

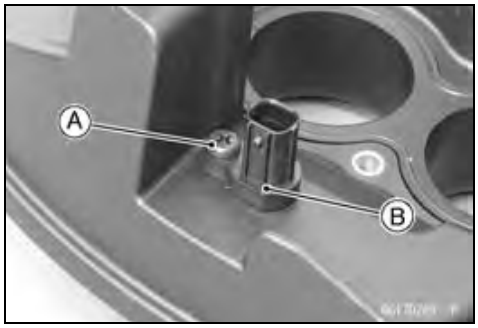

- Remove:
  Right Air Cleaner Housing (see Air Cleaner Housing Removal)
  Screw [A]
- Pull out the inlet air temperature sensor [B].



- Check that the O-ring [A] is in place on the inlet air temperature sensor [B].
- Tighten the screw securely.

Inlet Air Temperature Sensor Output Voltage Inspection

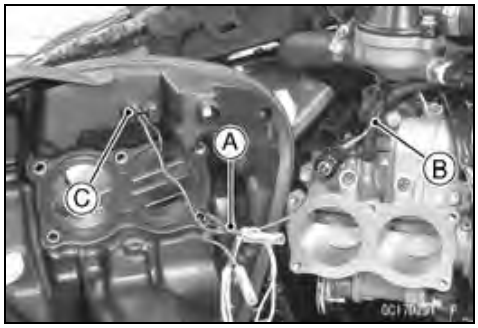

NOTE

○*Be sure the battery is fully charged.*

- Turn the ignition switch OFF.
- Remove:
  Right Air Cleaner Housing (see Air Cleaner Housing Removal)
- Disconnect the inlet air temperature sensor connector and connect the measuring adapter [A] between these connectors as shown in the figure.
  Main Harness [B]
  Inlet Air Temperature Sensor [C]

  Special Tool - Measuring Adapter: 57001-1700

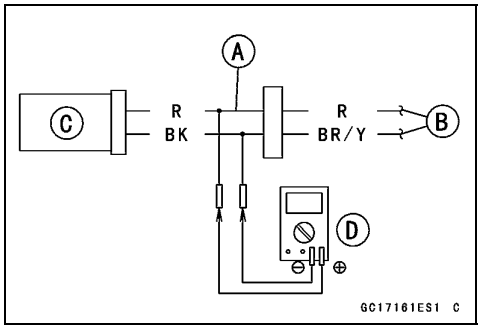

- Connect a digital meter [D] to the measuring adapter leads.

  Inlet Air Temperature Sensor Output Voltage
  Connections to Adapter:
  Digital Meter (+) → R (main harness R) lead
  Digital Meter (–) → BK (main harness BR/Y) lead

- Measure the output voltage with the engine stopped and the connector joined.
- Turn the ignition switch ON.

  Output Voltage
  Standard: About DC 2.25 ~ 2.50 V at inlet air temperature 20°C (68°F)

NOTE

○*The output voltage changes according to the inlet air temperature.*

Downloaded from www.vulcanriders-sweden.org

Inlet Air Temperature Sensor (Service Code 13)

● Turn the ignition switch OFF.
★If the reading is within the standard, check the ECU for its ground and power supply (see ECU Power Supply Inspection).
★If the ground and power supply are good, replace the ECU (see ECU Removal/Installation).

★If the reading is out of the standard, remove the ECU and check the wiring for continuity between main harness connectors.

Special Tool - Hand Tester: 57001-1394

○Disconnect the ECU and sensor connectors.

Wiring Continuity Inspection
ECU Connector [A] ←→
Inlet Air Temperature Sensor Connector [B]
R lead (ECU terminal 36) [C]
BR/Y lead (ECU terminal 55) [D]

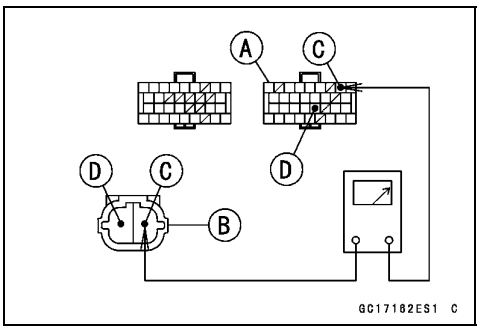

★If the wiring is good, check the inlet air temperature sensor resistance (see Inlet Air Temperature Sensor Resistance Inspection).

Inlet Air Temperature Sensor Resistance Inspection

● Remove the inlet air temperature sensor (see Inlet Air Temperature Sensor Removal/Installation).
● Suspend the sensor [A] in a container of machine oil so that the heat-sensitive portion is submerged.
● Suspend a thermometer [B] with the heat-sensitive portion [C] located in almost the same depth with the sensor.

NOTE

○*The sensor and thermometer must not touch the container side or bottom.*

● Place the container over a source of heat and gradually raise the temperature of the oil while stirring the oil gently for even temperature.
● Using a digital meter, measure the internal resistance of the sensor across the terminals at the temperatures shown in the following.

Inlet Air Temperature Sensor Resistance
Standard: 5.4 ~ 6.6 kΩ at 0°C (32°F)
0.29 ~ 0.39 kΩ at 80°C (176°F)

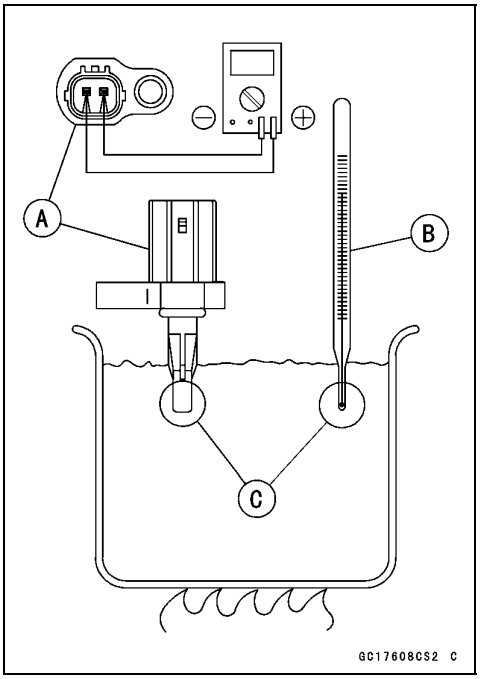

★If the reading is out of the standard, replace the sensor.
★If the reading is within the standard, but the problem still exists, replace the ECU (see ECU Removal/Installation).

Downloaded from www.vulcanriders-sweden.org

Inlet Air Temperature Sensor (Service Code 13)

Inlet Air Temperature Sensor Circuit

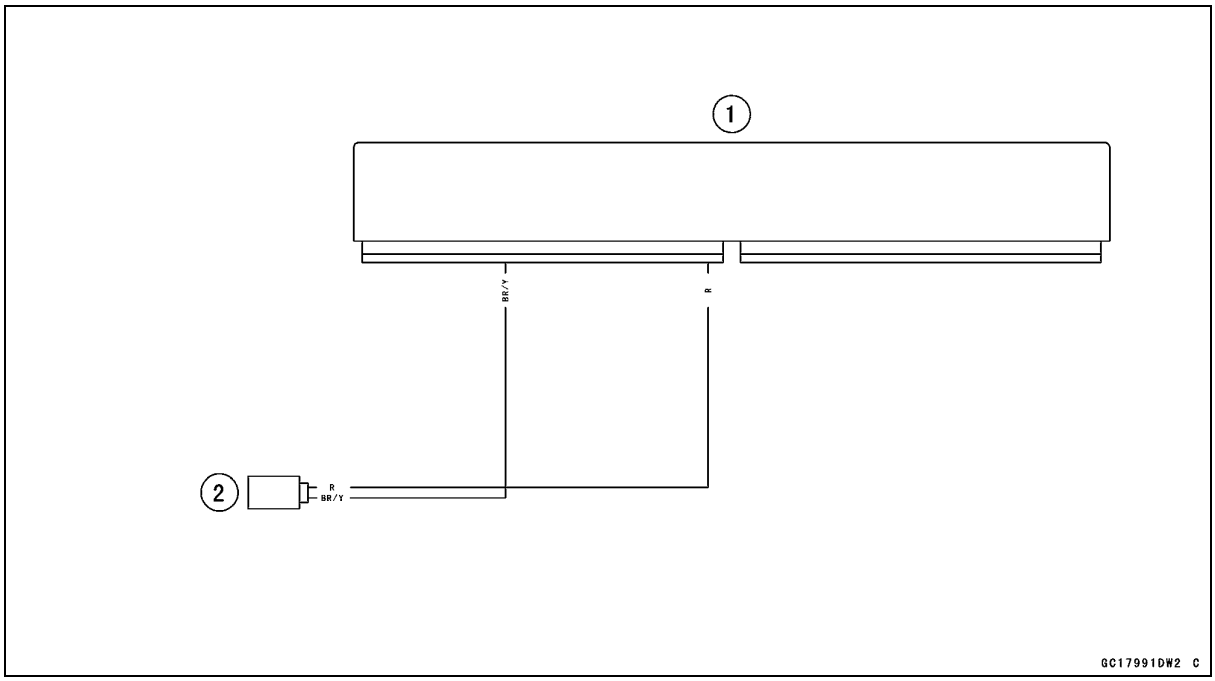

1. ECU
2. Inlet Air Temperature Sensor

Downloaded from www.vulcanriders-sweden.org

Water Temperature Sensor (Service Code 14)

Water Temperature Sensor Removal/Installation

CAUTION

Never drop the water temperature sensor, especially on a hard surface. Such a shock to the sensor can damage it.

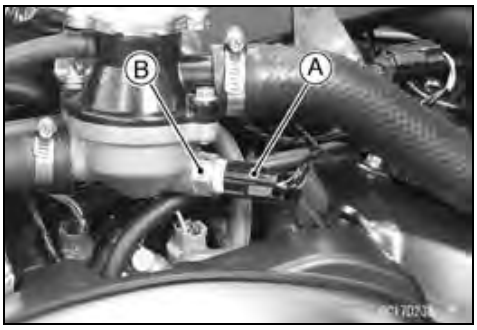

- Remove:
  Fuel Tank (see Fuel Tank Removal)
- Drain the coolant (see Coolant Change in the Periodic Maintenance chapter).
- Remove:
  Connector [A]
  Water Temperature Sensor [B]

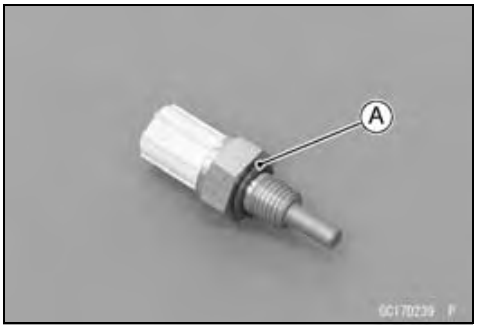

- Replace the O-ring [A] with a new one.
- Tighten:

  Torque - Water Temperature Sensor: 12 N·m (1.2 kgf·m, 106 in·lb)

- Fill the engine with coolant and bleed the air from the cooling system (see Coolant Change in the Periodic Maintenance chapter).

Water Temperature Sensor Output Voltage Inspection



NOTE

○*Be sure the battery is fully charged.*

- Turn the ignition switch OFF.
- Remove:
  Fuel Tank (see Fuel Tank Removal)
- Disconnect the water temperature sensor connector and connect the measuring adapter [A] between these connectors as shown in the figure.
  Main Harness [B]
  Water Temperature Sensor [C]

  Special Tool - Measuring Adapter: 57001-1700

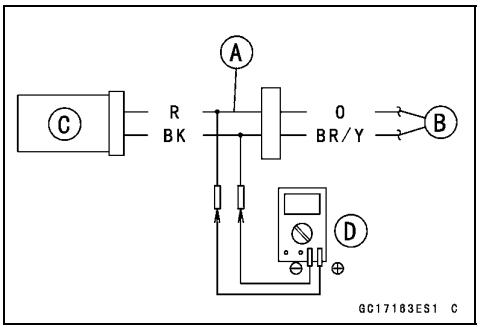

- Connect a digital meter [D] to the measuring adapter leads.

  Water Temperature Sensor Output Voltage
  Connections to Adapter:

  Digital Meter (+) → R (main harness O) lead

  Digital Meter (–) → BK (main harness BR/Y) lead

- Measure the output voltage with the engine stopped and the connector joined.
- Turn the ignition switch ON.

  Output Voltage
  Standard: About DC 2.80 ~ 2.97 V at 20°C (68°F)

NOTE

○*The output voltage changes according to the coolant temperature in the engine.*

Downloaded from www.vulcanriders-sweden.org

Water Temperature Sensor (Service Code 14)

● Turn the ignition switch OFF.

★If the reading is within the standard, check the ECU for its ground, and power supply (see ECU Power Supply Inspection).

★If the ground and power supply are good, replace the ECU (see ECU Removal/Installation).

★If the reading is out of the standard, remove the ECU and check the wiring for continuity between main harness connectors.

Special Tool - Hand Tester: 57001-1394

○Disconnect the ECU and sensor connectors.

Wiring Continuity Inspection
ECU Connector [A] ←→
Water Temperature Sensor Connector [B]
O lead (ECU terminal 53) [C]
BR/Y lead (ECU terminal 55) [D]

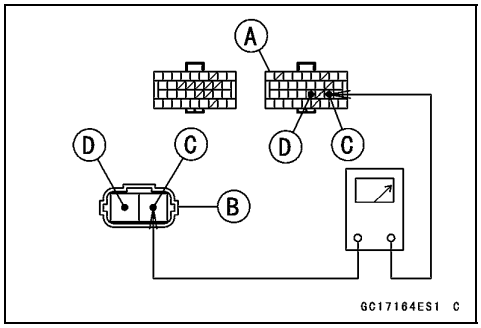

★If the wiring is good, check the water temperature sensor resistance (see Water Temperature Sensor Resistance Inspection).

Water Temperature Sensor Resistance Inspection

● Refer to the Water Temperature Sensor Inspection in the Electrical System chapter.

★If the reading is within the standard, but the problem still exists, replace the ECU (see ECU Removal/Installation).

Water Temperature Sensor Circuit

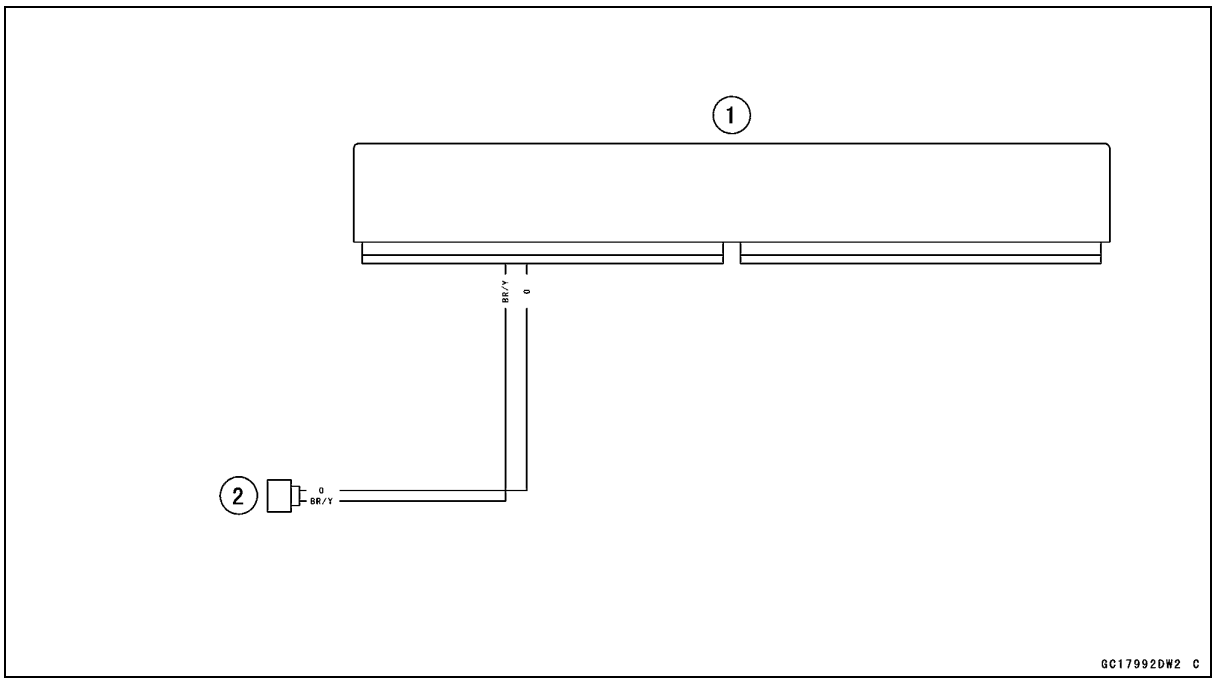

1. ECU
2. Water Temperature Sensor

Downloaded from www.vulcanriders-sweden.org

Accelerator Position Sensor (Service Code 18)

Accelerator Position Sensor Removal

CAUTION

Do not remove accelerator position sensor [A] since it has been adjusted and set with precision at the factory.
Never drop the throttle body assy, especially on a hard surface. Such a shock to the accelerator position sensor can damage it.

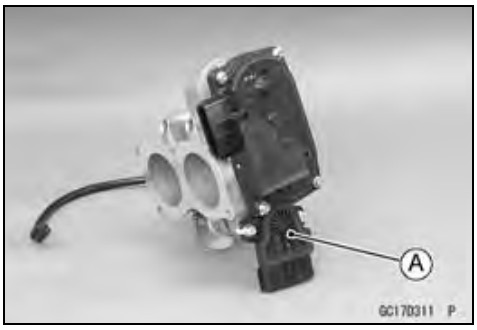

Accelerator Position Sensor Output Voltage Inspection

NOTE

○*Be sure the battery is fully charged.*

- Turn the ignition switch OFF.
- Remove:
  Front Seat (see Front Seat Removal in the Frame chapter)
  Battery Case Cover (see Battery Removal in the Electrical System chapter)

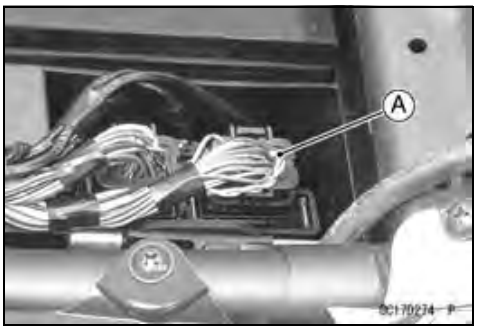

- Connect the digital meter to the connector [A] with the needle adapter set.

Special Tool - Needle Adapter Set: 57001-1457

Accelerator Position Sensor Output Voltage Connection:

(1) Digital Meter (+) → G/W lead (ECU terminal 66)
Digital Meter (−) → BK/O lead (ECU terminal 65)

(2) Digital Meter (+) → G/BK lead (ECU terminal 50)
Digital Meter (−) → BR lead (ECU terminal 58)

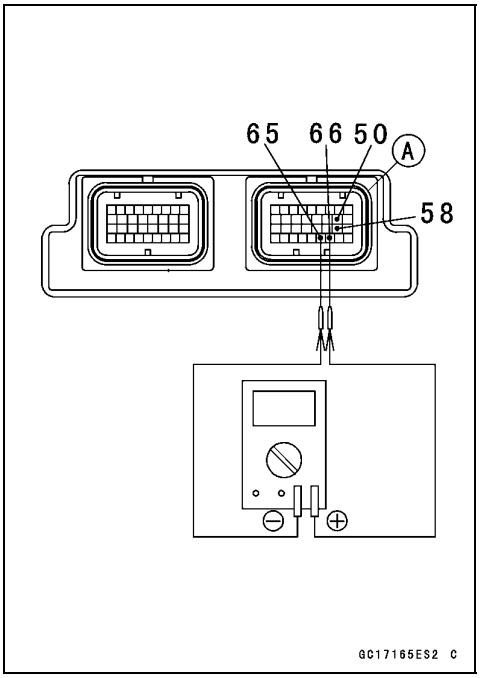

- Turn the ignition switch ON.
- Measure the output voltage with the ordinary throttle position and full throttle opened.

Output Voltage

Standard: (1) DC 0.50 ~ 0.90 V at ordinary throttle position
DC 3.85 ~ 4.75 V at full throttle opening (for reference)

(2) DC 0.35 ~ 1.05 V at ordinary throttle position
DC 3.85 ~ 4.75 V at full throttle opening (for reference)

NOTE

○*Open the throttle, confirm the output voltage will be raise.*

- Turn the ignition switch OFF.

★If the reading is out of the standard, check the input voltage (see Accelerator Position Sensor Input Voltage Inspection).

★If the reading is within the standard, replace the ECU (see ECU Removal/Installation).

Downloaded from www.vulcanriders-sweden.org

Accelerator Position Sensor (Service Code 18)

Accelerator Position Sensor Input Voltage Inspection

NOTE

○*Be sure the battery is fully charged.*

- Turn the ignition switch OFF.
- Remove:
  Front Seat (see Front Seat Removal in the Frame chapter)
  Battery Case Cover (see Battery Removal in the Electrical System chapter)
- Connect the digital meter to the connector [A] with the needle adapter set.

Special Tool - Needle Adapter Set: 57001-1457

Accelerator Position Sensor Input Voltage Connection:

(1) Digital Meter (+) → BL/W lead (ECU terminal 67)
Digital Meter (−) → BK/O lead (ECU terminal 65)

(2) Digital Meter (+) → BL/BK lead (ECU terminal 43)
Digital Meter (−) → BR lead (ECU terminal 58)

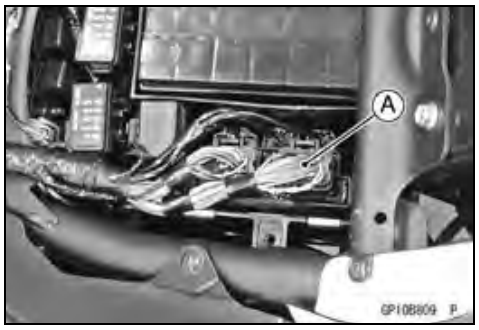

- Turn the ignition switch ON.
- Measure the input voltage.

Input Voltage
Standard: (1) and (2) DC 4.75 ~ 5.25 V

- Turn the ignition switch OFF.

★If the reading is out of the standard, replace the ECU (see ECU Removal/Installation).

★If the reading is within the standard, check the accelerator position sensor resistance (see Accelerator Position Sensor Resistance).

★If the resistance is the standard, check the wiring for continuity between the main harness connectors using the Accelerator Position Sensor Circuit.

Special Tool - Hand Tester: 57001-1394

★If the wiring is not good, replace the main harness.

★If the wiring is good, replace the ECU (see ECU Removal/Installation).

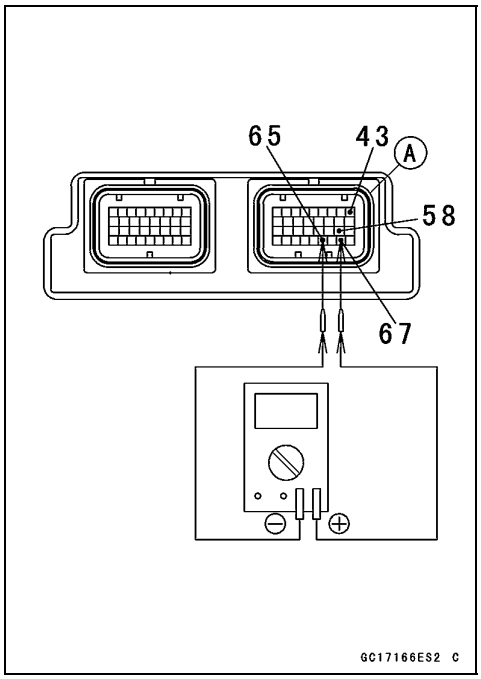

Accelerator Position Sensor Resistance Inspection

- Turn the ignition switch OFF.
- Remove:
  Right Air Cleaner Housing (see Right Air Cleaner Housing Removal)
- Disconnect the accelerator position sensor connector [A].

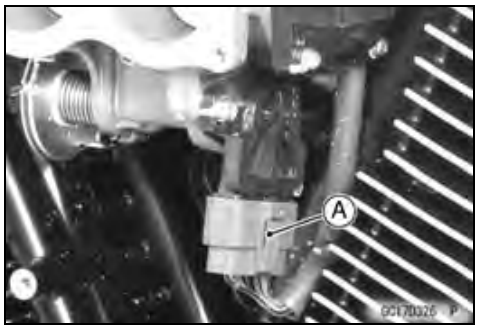

Downloaded from www.vulcanriders-sweden.org

Accelerator Position Sensor (Service Code 18)

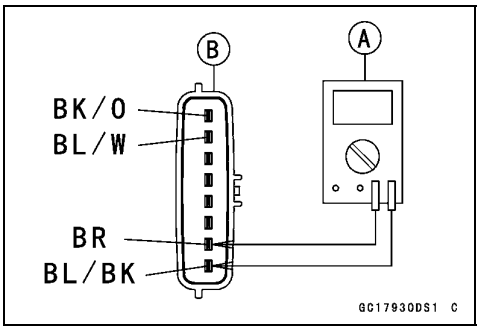

● Connect the digital meter [A] to the terminals of the accelerator position sensor connector [B].

Accelerator Position Sensor Resistance
Connection:

(1) BL/W lead terminal → BK/O lead terminal

(2) BL/BK lead terminal → BR lead terminal

● Measure the accelerator position sensor resistance.

Accelerator Position Sensor Resistance
Standard: (1) and (2) 4 ~ 6 kΩ

★If the reading is out of the standard, replace the throttle body assy (see Throttle Body Assy Removal/Installation).

Accelerator Position Sensor Circuit

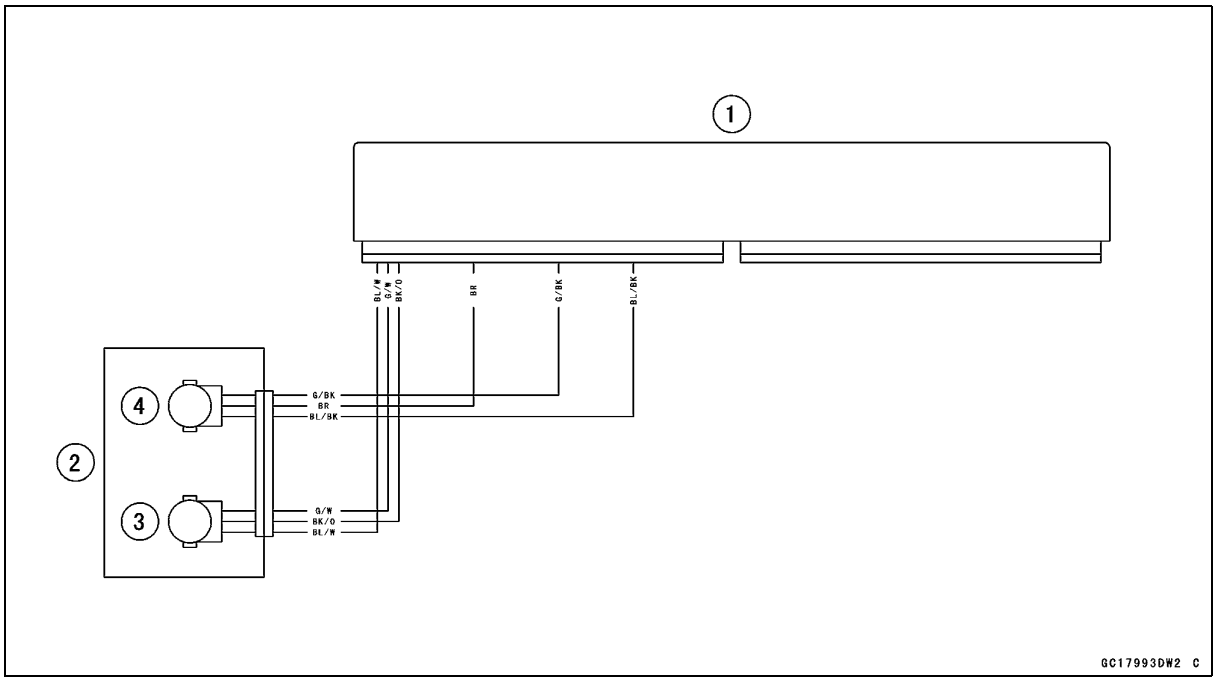

1. ECU
2. Accelerator Position Sensor
3. Accelerator Position Sensor 1
4. Accelerator Position Sensor 2

Downloaded from www.vulcanriders-sweden.org

Crankshaft Sensor (Service Code 21)

The crankshaft sensor has no power source, and when the engine stops, the crankshaft sensor generates no signals.

Crankshaft Sensor Removal/Installation

● Refer to the Crankshaft Sensor Removal/Installation in the Electrical System chapter.

Crankshaft Sensor Resistance Inspection

● Refer to the Crankshaft Sensor Inspection in the Electrical System chapter.

★If the reading is within the standard, check the peak voltage (see Crankshaft Sensor Peak Voltage Inspection).

Crankshaft Sensor Peak Voltage Inspection

● Refer to the Crankshaft Sensor Peak Voltage Inspection in the Electrical System chapter.

★If the reading is within the standard, remove the ECU and check the wiring for continuity between main harness connectors.

Special Tool - Hand Tester: 57001-1394

○Disconnect the ECU and sensor connectors.

Wiring Continuity Inspection
ECU Connector [A] ←→
Crankshaft Sensor Connector [B]
Y lead (ECU terminal 38) [C]
BK lead (ECU terminal 47) [D]

★If the wiring is good, check the ECU for its ground and power supply (see ECU Power Supply Inspection).

★If the ground and power supply are good, replace the ECU (see ECU Removal/Installation).

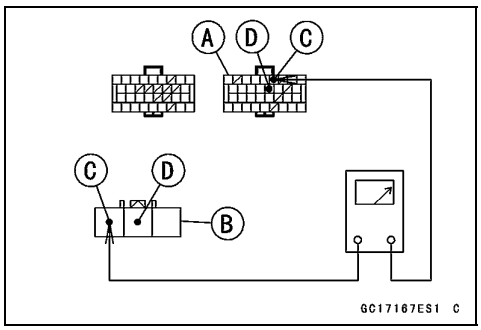

Downloaded from www.vulcanriders-sweden.org

Crankshaft Sensor (Service Code 21)

Crankshaft Sensor Circuit

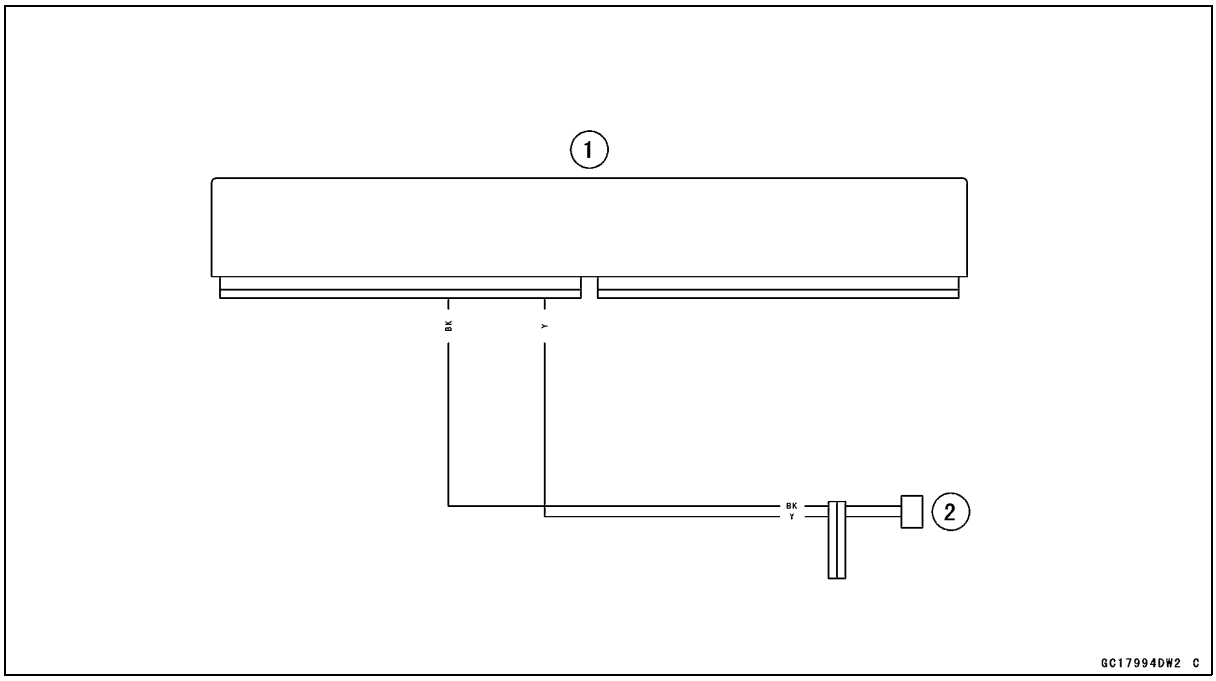

1. ECU
2. Crankshaft Sensor

Downloaded from www.vulcanriders-sweden.org

Speed Sensor (Service Code 24)

Speed Sensor Removal/Installation

● Refer to the Speed Sensor Removal/Installation in the Electrical System chapter.

Speed Sensor Input Voltage Inspection

NOTE

○*Be sure the battery is fully charged.*

● Turn the ignition switch OFF.
● Disconnect the speed sensor connector [A].



● Connect the speed sensor measuring adapter [A] between these connectors as shown in the figure.
Main Harness [B]
Speed Sensor [C]

Special Tool - Speed Sensor Measuring Adapter: 57001 -1667



● Connect a digital meter [D] to the speed sensor measuring adapter leads.

Speed Sensor Input Voltage
Connections to Adapter:
Digital Meter (+) → BL (main harness BL) lead
Digital Meter (–) → BK/Y (main harness BR/Y) lead

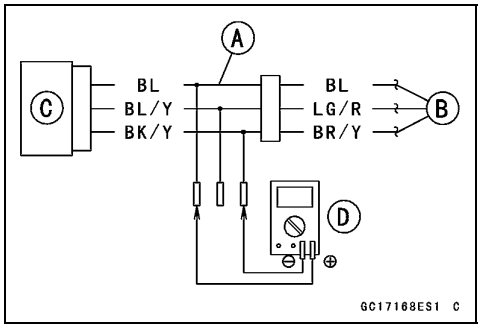

● Measure the input voltage with the engine stopped and with the connector joined.
● Turn the ignition switch ON.

Input Voltage
Standard: DC 4.75 ~ 5.25 V

● Turn the ignition switch OFF.
★If the reading is within the standard, check the output voltage (see Speed Sensor Output Voltage Inspection).

★If the reading is out of the standard, remove the ECU and check the wiring for continuity between main harness connectors.

Special Tool - Hand Tester: 57001-1394

○Disconnect the ECU and sensor connectors.

Wiring Continuity Inspection
ECU Connector [A] ←→
Speed Sensor Connector [B]
BL lead (ECU terminal 48) [C]
BR/Y lead (ECU terminal 55) [D]

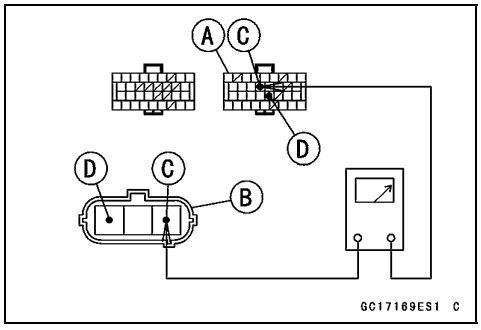

★If the wiring is good, check the ECU for its ground and power supply (see ECU Power Supply Inspection).
★If the ground and power supply are good, replace the ECU (see ECU Removal/Installation).

Downloaded from www.vulcanriders-sweden.org

Speed Sensor (Service Code 24)

Speed Sensor Output Voltage Inspection



● Using the jack, raise the rear wheel off the ground (see Rear Wheel Removal in the Wheels/Tires chapter).

Special Tool - Jack: 57001-1238

● Measure the output voltage at the speed sensor in the same way as input voltage inspection, note the following.

○Disconnect the speed sensor connector and connect the speed sensor measuring adapter [A] between these connectors as shown in the figure.

Main Harness [B]
Speed Sensor [C]

Special Tool - Speed Sensor Measuring Adapter: 57001 -1667

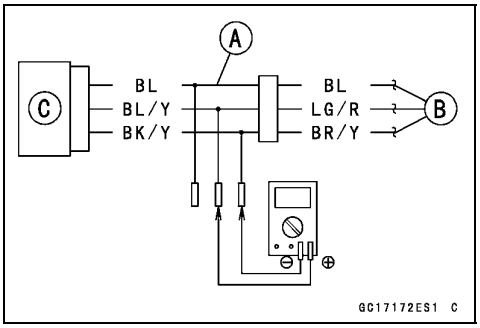

Speed Sensor Output Voltage
Connections to Adapter:
Digital Meter (+) → BL/Y (main harness LG/R) lead
Digital Meter (–) → BK/Y (main harness BR/Y) lead

● Measure the output voltage with the engine stopped and with the connector joined.
● Turn the ignition switch ON.

Output Voltage
Standard: About DC 0.05 ~ 0.09 V or DC 4.5 ~ 4.9 V at ignition switch ON and 0 km/h

NOTE

○*Rotate the rear wheel by hand, confirm the output voltage will be raise or lower.*

● Turn the ignition switch OFF.
★If the reading is out of the standard, replace the sensor.

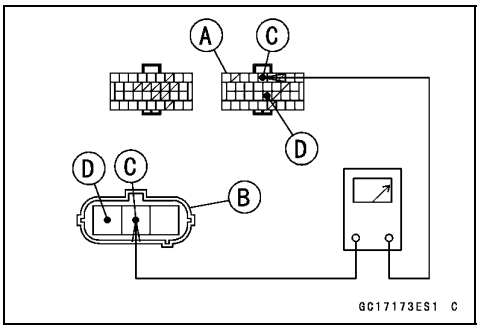

★If the reading is within the standard, remove the ECU and check the wiring for continuity between main harness connectors.

Special Tool - Hand Tester: 57001-1394

○Disconnect the ECU and sensor connectors.

Wiring Continuity Inspection
ECU Connector [A] ←→
Speed Sensor Connector [B]
LG/R lead (ECU terminal 39) [C]
BR/Y lead (ECU terminal 55) [D]

★If the wiring is good, check the ECU for its ground and power supply (see ECU Power Supply Inspection).
★If the ground and power supply are good, replace the ECU (see ECU Removal/Installation).

Downloaded from www.vulcanriders-sweden.org

Speed Sensor (Service Code 24)

Speed Sensor Circuit

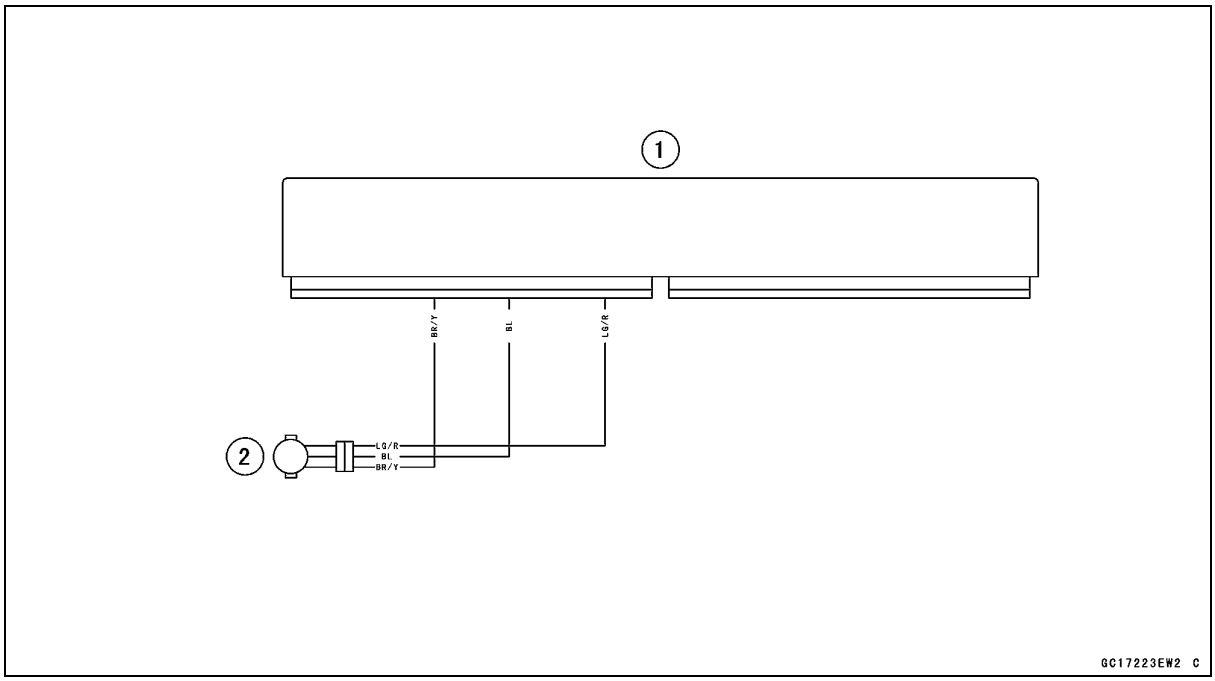

1. ECU
2. Speed Sensor

Downloaded from www.vulcanriders-sweden.org

Gear Position Switch (Service Code 25)

Gear Position Switch Removal/Installation

● Refer to the Gear Position Switch Removal/Installation in the Electrical System chapter.

Gear Position Switch Resistance Inspection

● Refer to the Gear Position Switch Inspection in the Electrical System chapter.

★If the reading is as the specified, check the output voltage (see Gear Position Switch Output Voltage Inspection).

Gear Position Switch Output Voltage Inspection

NOTE

○*Be sure the battery is fully charged.*

● Turn the ignition switch OFF.

● Disconnect the gear position switch lead connector [A].



● Connect the measuring adapter [A] between these connectors as shown in the figure.
Main Harness [B]
Gear Position Switch Lead Connector [C]

Special Tool - Measuring Adapter: 57001-1700



● Connect a digital meter [D] to the measuring adapter leads.

Gear Position Switch Output Voltage
Connections to Adapter:

Digital Meter (+) → R (switch BL) lead

Digital Meter (–) → Battery (–) terminal

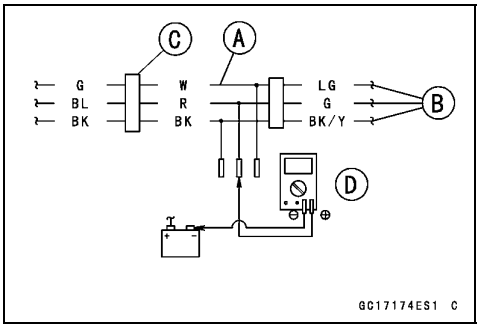

● Measure the switch output voltage with the engine stopped and with the connector joined.

● Turn the ignition switch ON.

○When changing the gear position from lower gear to higher gear, raise the rear wheel off the ground with the jack (see Rear Wheel Removal in the Wheels/Tires chapter) and rotate the rear wheel by hand.

Special Tool - Jack: 57001-1238

Output Voltage at 1 ~ 6 Gear Positions
Standard:

1st	**About 3.0 V**
2nd	**About 2.5 V**
3rd	**About 2.0 V**
4th	**About 1.5 V**
5th	**About 1.1 V**
6th	**About 0.7 V**

Downloaded from www.vulcanriders-sweden.org

Gear Position Switch (Service Code 25)

● Turn the ignition switch OFF.
★If the reading is out of the standard, check the wiring for continuity, using the wiring diagram in this section.

Special Tool - Hand Tester: 57001-1394

★If the wiring is good, check the ECU for its ground and power supply (see ECU Power Supply Inspection).
★If the ground and power supply are good, replace the ECU (see ECU Removal/Installation).

Gear Position Switch Circuit

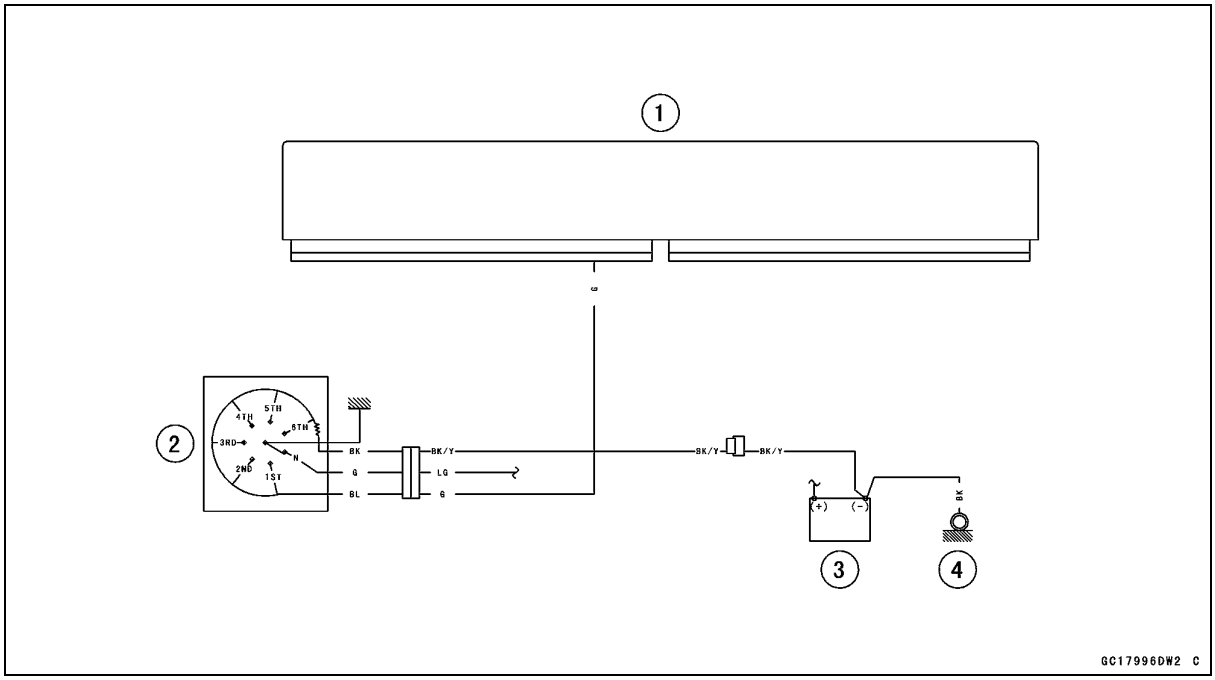

1. ECU
2. Gear Position Switch
3. Battery
4. Engine Ground

Downloaded from www.vulcanriders-sweden.org

Vehicle-down Sensor (Service Code 31)

This sensor has a weight [A] with two magnets inside, and sends a signal to the ECU. But when the motorcycle banks 60 ~ 70° or more to either side (in fact falls down), the weight turns and the signal changes. The ECU senses this change, and stops the fuel pump relay, the fuel injectors (primary and secondary) and the ignition system.

Hall IC [B]

When the motorcycle is down, the ignition switch is left ON. If the starter button is pushed, the electric starter turns but the engine does not start. To start the engine again, raise the motorcycle, turn the ignition switch OFF, and then ON.

Vehicle-down Sensor [A]
Ground Terminal [B]: BR/Y
Output Terminal [C]: Y/R
Power Source Terminal [D]: BL

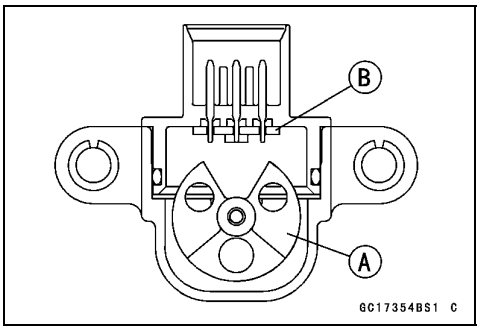

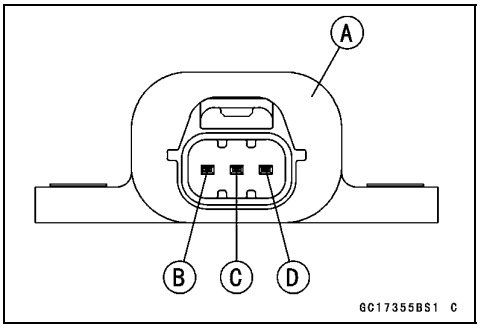

Vehicle-down Sensor Removal

CAUTION

Never drop the vehicle-down sensor, especially on a hard surface. Such a shock to the sensor can damage it.

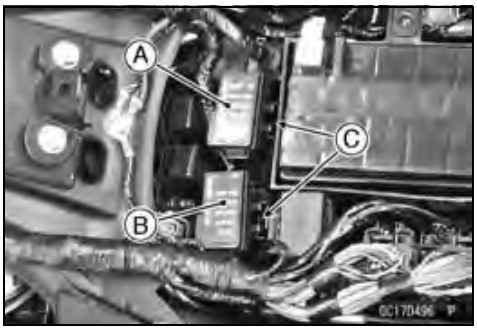

● Remove:
Battery Case Cover (see Battery Removal in the Electrical System chapter)
Fuse Box 1 [A]
Fuse Box 2 [B]

○Push the stopper [C] of the fuse box and pull out it upward.

● Remove:
Connector [A]
Bolts [B]
Vehicle-down Sensor [C]

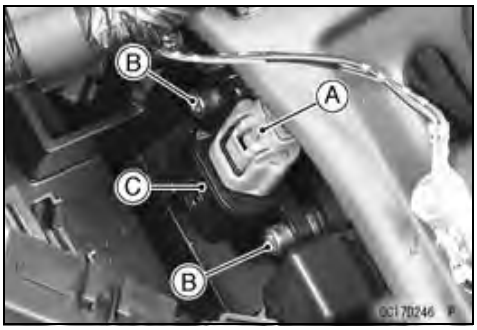

Downloaded from www.vulcanriders-sweden.org

Vehicle-down Sensor (Service Code 31)

Vehicle-down Sensor Installation

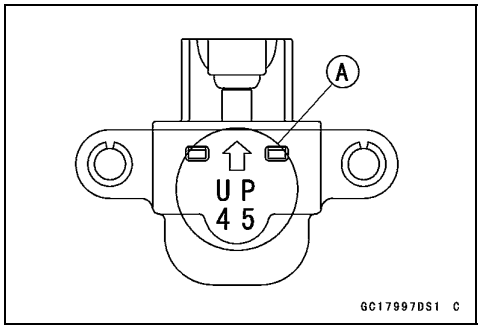

- The UP mark [A] of the sensor should face upward.
- Tighten the vehicle-down senor bolts securely.

⚠ WARNING

Incorrect installation of the vehicle-down sensor could cause sudden loss of engine power. The rider could lose balance during certain riding situations like leaning over in a turn with the potential for an accident resulting in injury or death. Ensure that the vehicle-down sensor is held in place by the battery case.

Vehicle-down Sensor Input Voltage Inspection

NOTE

○*Be sure the battery is fully charged.*



- Remove the vehicle-down sensor (see Vehicle-down Sensor Removal).
- Connect the measuring adapter [A] between the main harness connector and vehicle-down sensor connector as shown in the figure.
  Main Harness [B]
  Vehicle-down Sensor [C]

Special Tool - Measuring Adapter: 57001-1700

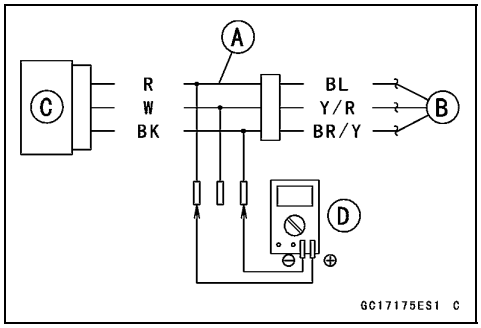

- Connect a digital meter [D] to the measuring adapter leads.

Vehicle-down Sensor Input Voltage
Connections to Adapter:

Digital Meter (+) → R (main harness BL) lead

Digital Meter (–) → BK (main harness BR/Y) lead

- Measure the input voltage with the engine stopped and with the connector joined.
- Turn the ignition switch ON.

Input Voltage
Standard: DC 4.75 ~ 5.25 V

- Turn the ignition switch OFF.

★If the reading is within the standard, check the output voltage (see Vehicle-down Sensor Output Voltage Inspection).

Downloaded from www.vulcanriders-sweden.org

Vehicle-down Sensor (Service Code 31)

★If the reading is out of the standard, remove the ECU and check the wiring for continuity between main harness connectors.

Special Tool - Hand Tester: 57001-1394

○Disconnect the ECU and sensor connectors.

Wiring Continuity Inspection
ECU Connector [A] ←→
Vehicle-down Sensor Connector [B]
BL lead (ECU terminal 48) [C]
BR/Y lead (ECU terminal 55) [D]

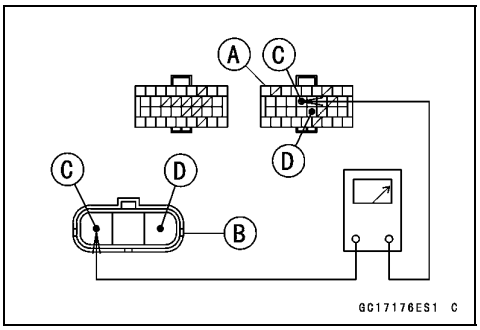

★If the wiring is good, check the ECU for its ground and power supply (see ECU Power Supply Inspection).
★If the ground and power supply are good, replace the ECU (see ECU Removal/Installation).

Vehicle-down Sensor Output Voltage Inspection

● Measure the output voltage at the vehicle-down sensor in the same way as input voltage inspection, note the following.

○Connect the measuring adapter [A] between the main harness connector and vehicle-down sensor connector as shown in the figure.

Special Tool - Measuring Adapter: 57001-1700

Main Harness [B]
Vehicle-down Sensor [C]



● Connect a digital meter [D] to the measuring adapter leads.

Vehicle-down Sensor Output Voltage
Connections to Adapter:
Digital Meter (+) → W (main harness Y/R) lead
Digital Meter (–) → BK (main harness BR/Y) lead

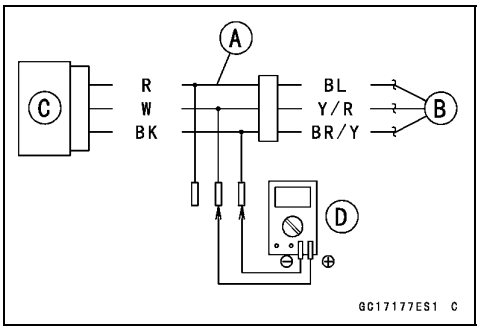

Downloaded from www.vulcanriders-sweden.org

Vehicle-down Sensor (Service Code 31)

- Hold the sensor vertically.
- Measure the output voltage with the engine stopped, and with the connector joined.
- Turn the ignition switch ON.
- Tilt the sensor 40 ~ 50° or more [A] right or left, then hold the sensor almost vertical with the arrow mark pointed up [B], and measure the output voltage.

Output Voltage

Standard: With sensor tilted 40 ~ 50° or more right or left: DC 0.65 ~ 1.35 V

With sensor arrow mark pointed up: DC 3.55 ~ 4.45 V

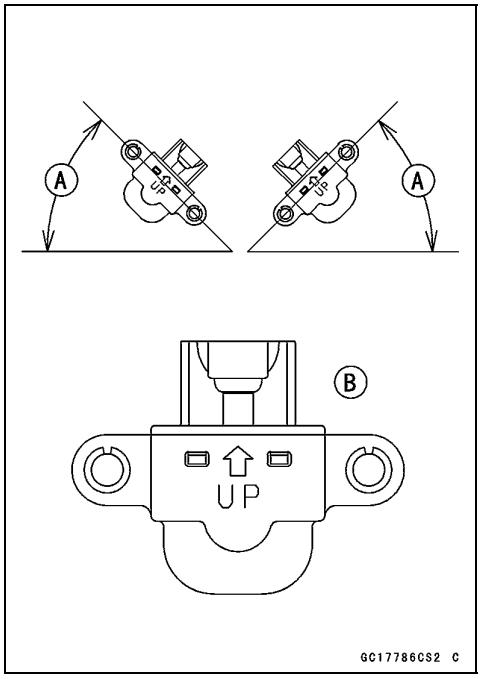

NOTE

○*If you need to test again, turn the ignition switch OFF, and then ON.*

- Turn the ignition switch OFF.

★If the reading is out of the standard, replace the sensor.

★If the reading is within the standard, remove the ECU and check the wiring for continuity between main harness connectors.

Special Tool - Hand Tester: 57001-1394

○Disconnect the ECU and sensor connectors.

Wiring Continuity Inspection

ECU Connector [A] ←→

Vehicle-down Sensor Connector [B]

Y/R lead (ECU terminal 52) [C]

BR/Y lead (ECU terminal 55) [D]

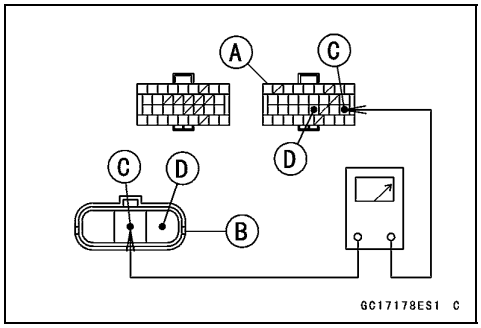

★If the wiring is good, check the ECU for its ground and power supply (see ECU Power Supply Inspection).

★If the ground and power supply are good, replace the ECU (see ECU Removal/Installation).

Downloaded from www.vulcanriders-sweden.org

Vehicle-down Sensor (Service Code 31)

Vehicle-down Sensor Circuit

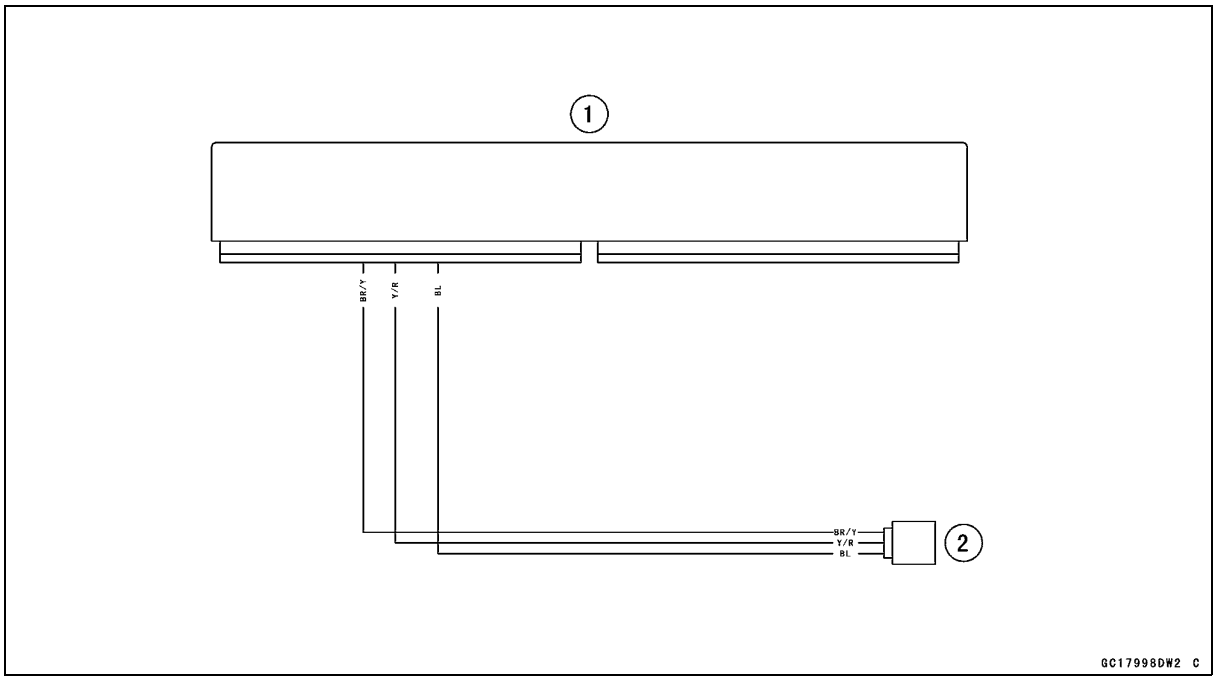

1. ECU
2. Vehicle-down Sensor

Downloaded from www.vulcanriders-sweden.org

Oxygen Sensor - not activated (Service Code 33, Equipped Models)

Oxygen Sensor Removal/Installation

- Refer to the Oxygen Sensor Removal/Installation (Equipped Models) in the Electrical System chapter.

Oxygen Sensor Inspection

- Warm up the engine thoroughly until the radiator fan starts.
- Turn the ignition switch OFF.
- Remove:
  Right Side Cover (see Side Cover Removal in the Frame chapter)
  Oxygen Sensor Connector [A]



- Connect the measuring adapter [A] between the main harness connector and oxygen sensor lead connector as shown in the figure.
  Main Harness [B]
  Oxygen Sensor [C]

  Special Tool - Measuring Adapter: 57001-1700
- Connect a digital meter [D] to the harness adapter leads.

  Oxygen Sensor Output Voltage
  Connections to Adapter:
  Digital Meter (+) → R (sensor BK) lead
  Digital Meter (–) → BK (sensor GY) lead



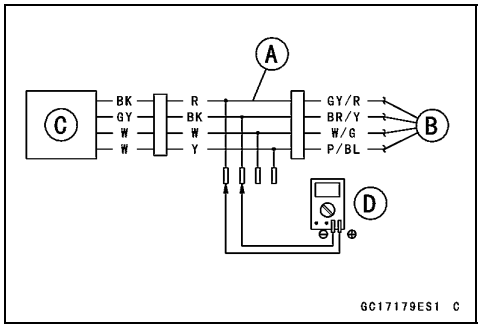

- Remove the fuel tank (see Fuel Tank Removal).
- Separate the air switching valve hoses [A] from the air switching valve.

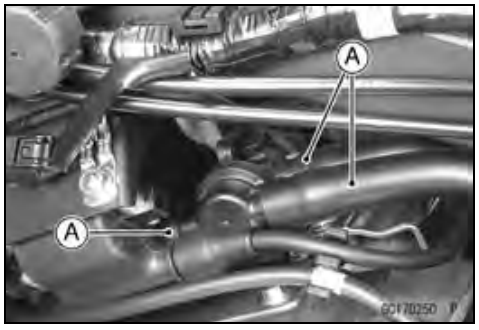

Downloaded from www.vulcanriders-sweden.org

Oxygen Sensor - not activated (Service Code 33, Equipped Models)

○Do not disconnect the air switching valve connector [A].



● Plug the air switching valve hose ends [A], and shut off the secondary air.



● Connect the following parts temporarily.
Fuel Pump/Fuel Level Sensor Lead Connector [A]
Fuel Hose (see Fuel Tank Installation)



● Start the engine, and let it idle.
● Measure the output voltage with the connector joined.

Output Voltage (with Plugs)
Standard: DC 0.8 V or more

● Next, remove the plugs from the air switching valve hoses [A] with idling.
● Measure the output voltage with the connector joined.

Output Voltage (without Plugs)
Standard: DC 0.24 V or less

● Turn the ignition switch OFF.

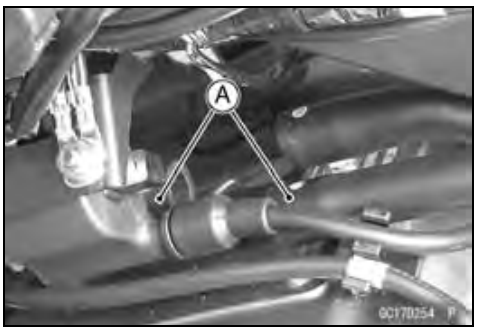

Downloaded from www.vulcanriders-sweden.org

Oxygen Sensor - not activated (Service Code 33, Equipped Models)

★If the reading is out of the standard (with plugs: 0.8 V or more, without plugs: 0.24 V or less), remove the ECU and check the wiring for continuity between main harness connectors.

Special Tool - Hand Tester: 57001-1394

○Disconnect the ECU and sensor connectors.

Wiring Continuity Inspection
ECU Connector [A] ←→
Oxygen Sensor Connector [B]
GY/R lead (ECU terminal 54) [C]
BR/Y lead (ECU terminal 55) [D]

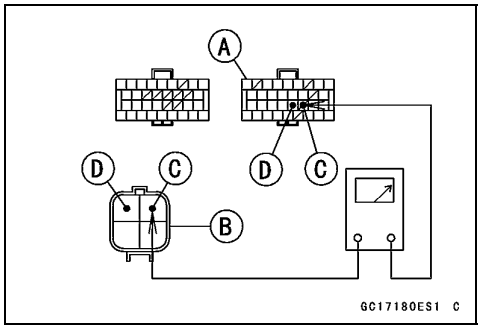

★If the wiring is good, replace the sensor.
★If the reading is within the standard (with plugs: 0.8 V or more, without plugs: 0.24 V or less), check the ECU for its ground and power supply (see ECU Power Supply Inspection).
★If the ground and power supply are good, replace the ECU (see ECU Removal/Installation).

Oxygen Sensor Circuit

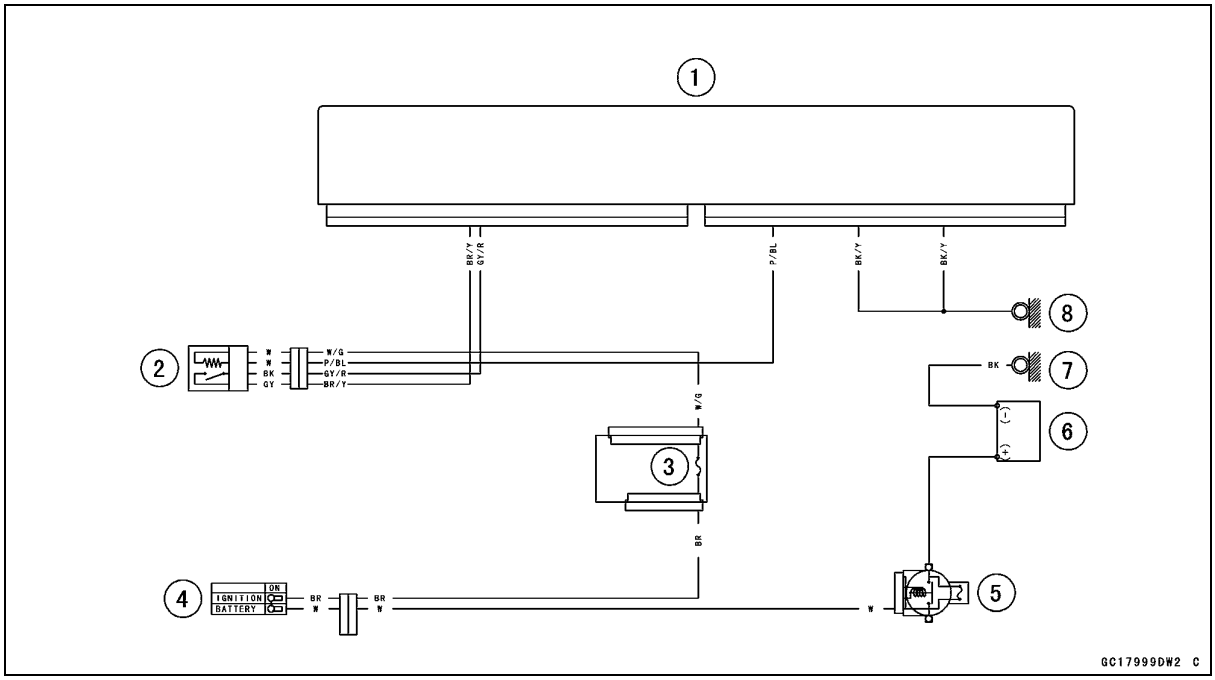

1. ECU
2. Oxygen Sensor
3. Oxygen Sensor Heater Fuse 10 A
4. Ignition Switch
5. Main Fuse 30 A
6. Battery
7. Engine Ground
8. Frame Ground 3

Downloaded from www.vulcanriders-sweden.org

Fuel Pump Relay (Service Code 46)

Fuel Pump Relay Removal/Installation



○The fuel pump relay is built in the relay box [A].

● Refer to the Relay Box Removal in the Electrical System chapter.

Fuel Pump Relay Inspection

● Refer to the Relay Circuit Inspection in the Electrical System chapter.

★If the fuel pump relay is normal, check the wiring for continuity (see wiring diagram in this section).

Special Tool - Hand Tester: 57001-1394

★If the wiring is good, check the ECU for its ground and power supply (see ECU Power Supply Inspection).

★If the ground and power supply are good, replace the ECU (see ECU Removal/Installation).

Fuel Pump Relay Circuit

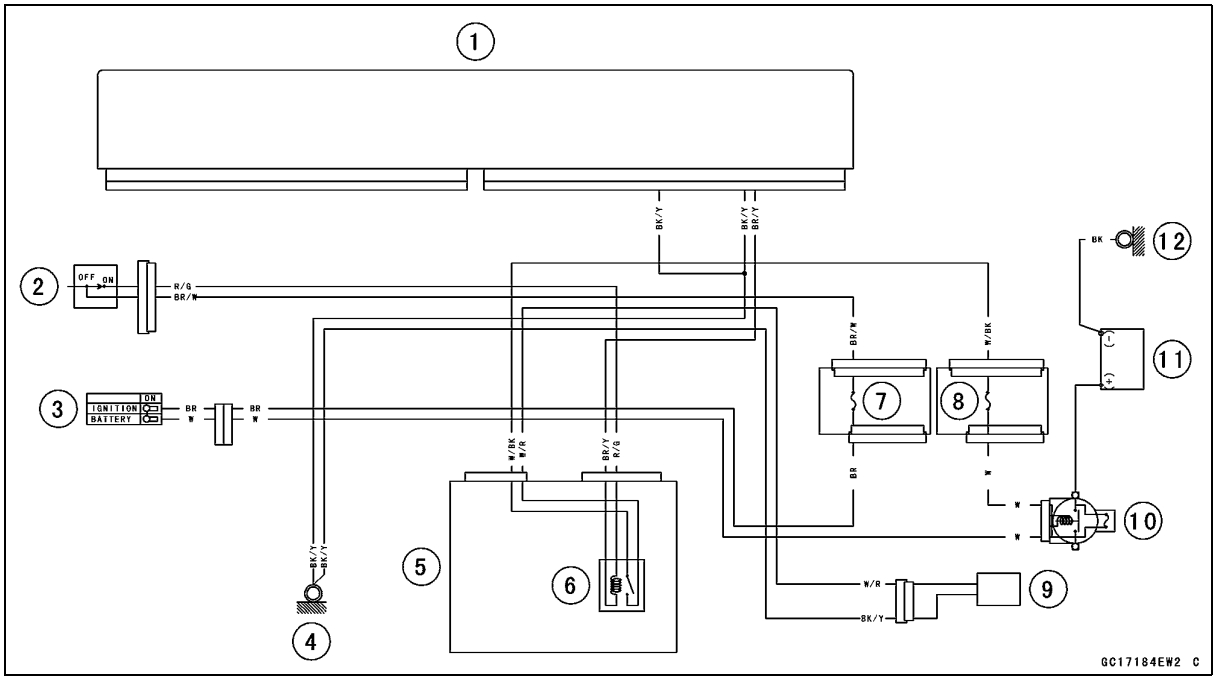

1. ECU
2. Engine Stop Switch
3. Ignition Switch
4. Frame Ground 3
5. Relay Box
6. Fuel Pump Relay
7. Ignition Fuse 10 A
8. ECU Fuse 10 A
9. Fuel Pump
10. Main Fuse 30 A
11. Battery
12. Engine Ground

Downloaded from www.vulcanriders-sweden.org

Return Spring (Service Code 49)

Return Spring Removal

CAUTION
Do not remove return spring in the gear case [A] since it has been set with precision at the factory.

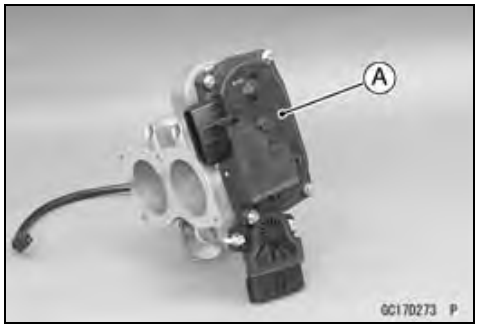

Return Spring Inspection

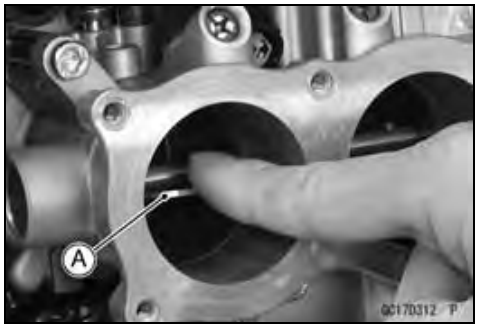

- Turn the ignition switch OFF.
- Remove
  Right Air Cleaner Housing (see Right Air Cleaner Housing Removal)
- Check that the throttle valves [A] move lightly by pushing finger without the spring force.

★If the throttle valves move lightly, the return spring is broken, replace the throttle body assy.

★If the throttle valves move hardly and return them by the return spring, check the output voltage of the throttle position sensor 1 (see Throttle Position Sensor Output Voltage Inspection).

★If the output voltage is good, replace the ECU (see ECU Removal/Installation).

Downloaded from www.vulcanriders-sweden.org

Ignition Coils #1, #2 (Service Code 51, 52)

Ignition Coil #1 (Front Cylinder): Service Code 51
Ignition Coil #2 (Rear Cylinder): Service Code 52

Ignition Coil Removal/Installation

● Refer to the Ignition Coil Removal/Installation in the Electrical System chapter.

Ignition Coil Primary Winding Resistance Inspection

● Refer to the Ignition Coil Inspection in the Electrical System chapter.

★If the reading is within the standard, check the input voltage (see Ignition Coil Input Voltage Inspection).

Ignition Coil Input Voltage Inspection

NOTE

○*Be sure the battery is fully charged.*

● Turn the ignition switch OFF.
● Remove:
Front Seat (see Front Seat Removal in the Frame chapter)
Battery Case Cover (see Battery Removal in the Electrical System chapter)
● Connect the digital meter to the connector [A] with the needle adapter set.

Special Tool - Needle Adapter Set: 57001-1457

Ignition Coil Input Voltage
Connections:
For Ignition Coil #1
Digital Meter (+) → BK/O lead (terminal 26)
Digital Meter (–) → Battery (–) terminal
For Ignition Coil #2
Digital Meter (+) → BK lead (terminal 1)
Digital Meter (–) → Battery (–) terminal

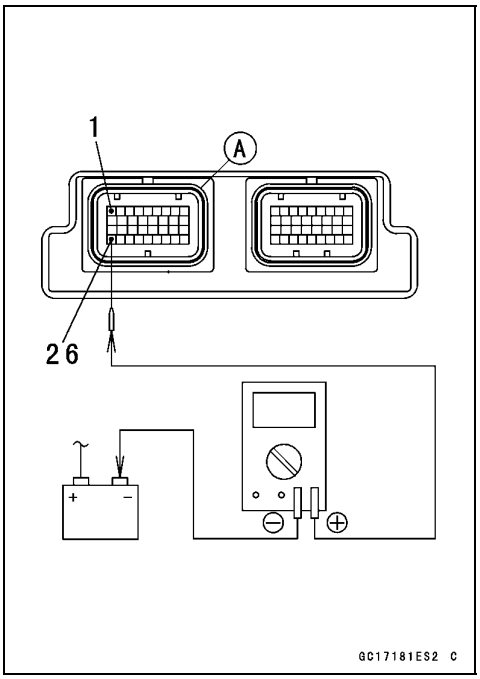

● Measure the input voltage to each primary winding of the ignition coils with the engine stopped, and with the connectors joined.
● Turn the engine stop switch to run position.
● Turn the ignition switch ON.

Input Voltage
Standard: about Battery Voltage

● Turn the ignition switch OFF.
● If the input voltage is within the standard, replace the ECU (see ECU Removal/Installation).

★If the input voltage is out of the standard, check the wiring for continuity (see Ignition Coil Circuit).

Special Tool - Hand Tester: 57001-1394

★If the wiring is good, replace the ECU (see ECU Removal/Installation).

★If the wiring is not good, replace the main harness.

Downloaded from www.vulcanriders-sweden.org

Ignition Coils #1, #2 (Service Code 51, 52)

Ignition Coil Circuit

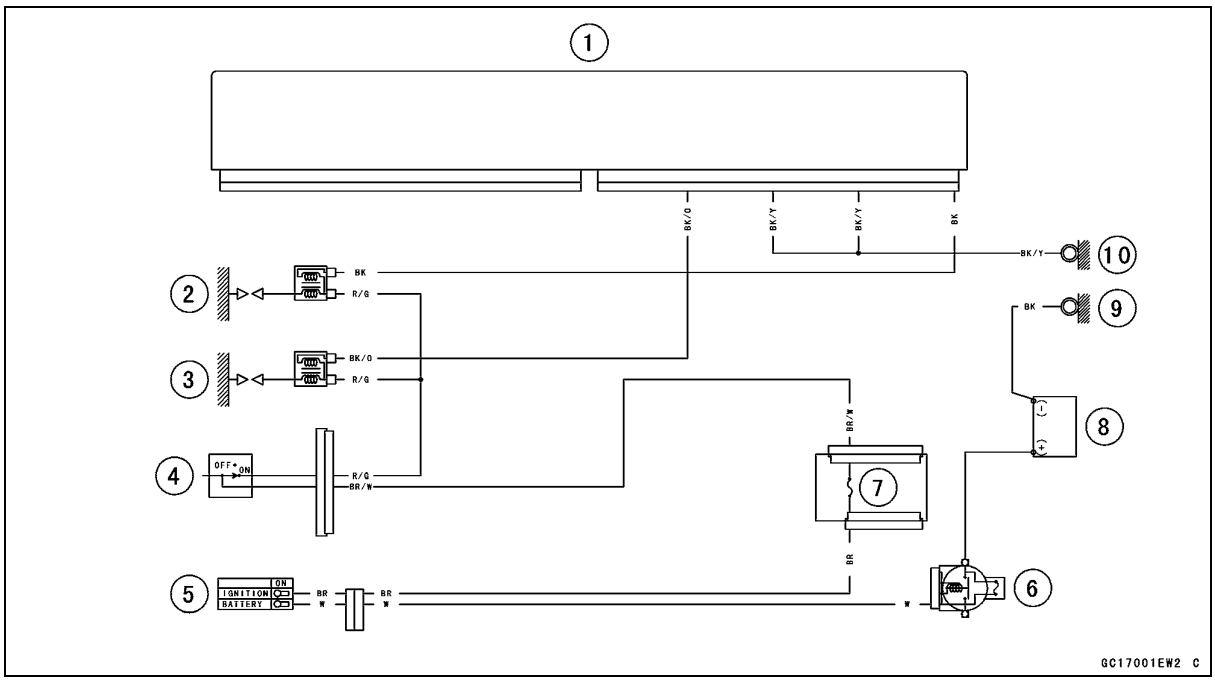

1. ECU
2. Ignition Coil #2 (Rear Cylinder)
3. Ignition Coil #1 (Front Cylinder)
4. Engine Stop Switch
5. Ignition Switch
6. Main Fuse 30 A
7. Ignition Fuse 10 A
8. Battery
9. Engine Ground
10. Frame Ground 3

Downloaded from www.vulcanriders-sweden.org

Radiator Fan Relay (Service Code 56)

Radiator Fan Relay Removal/Installation



○The radiator fan relay is built in the relay box [A].

● Refer to the Relay Box Removal in the Electrical System chapter.

Radiator Fan Relay Inspection

● Refer to the Relay Circuit Inspection in the Electrical System chapter.

★If the radiator fan relay is normal, check the wiring for continuity (see wiring diagram in this section).

Special Tool - Hand Tester: 57001-1394

★If the wiring is good, check the ECU for its ground and power supply (see ECU Power Supply Inspection).

★If the ground and power supply are good, replace the ECU (see ECU Removal/Installation).

Radiator Fan Relay Circuit

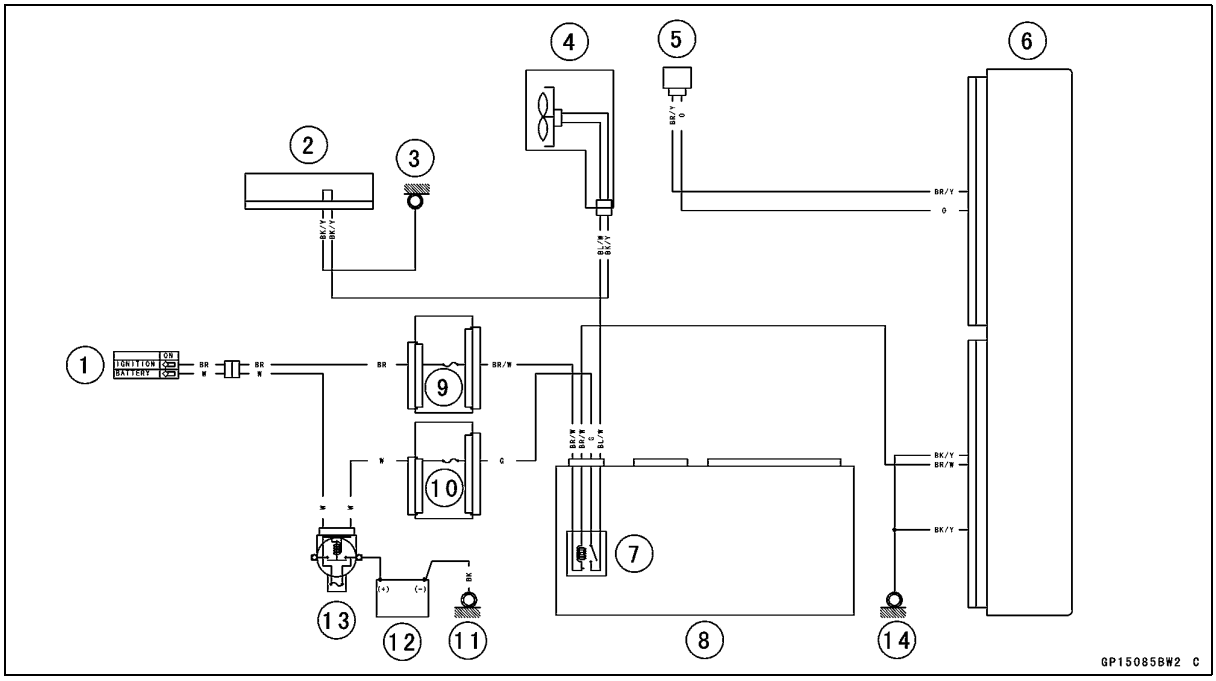

1. Ignition Switch
2. Joint Connector 1
3. Frame Ground 1
4. Fan Motor
5. Water Temperature Sensor
6. ECU
7. Fan Relay
8. Relay Box
9. Ignition Fuse 10 A
10. Fan Fuse 10 A
11. Engine Ground
12. Battery
13. Main Fuse 30 A
14. Frame Ground 3

Downloaded from www.vulcanriders-sweden.org

ETV Acutuator (Service Code 58)

ETV Actuator Removal

CAUTION

Do not remove ETV actuator in the gear case [A] since it has been set with precision at the factory.

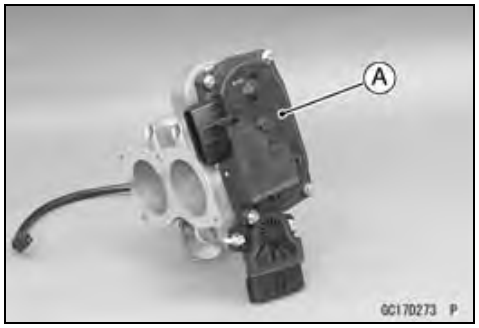

ETV Actuator Input Voltage Inspection

NOTE

○*Be sure the battery is fully charged.*

- Turn the ignition switch OFF.
- Remove:
  Front Seat (see Front Seat Removal in the Frame chapter)
  Battery Case Cover (see Battery Removal in the Electrical System chapter)

- Connect the digital meter to the connector [A] with the needle adapter set.

Special Tool - Needle Adapter Set: 57001-1457

ETV Actuator Input Voltage
Connection:
Digital Meter (+) → GY/BK lead (ECU terminal 6)
Digital Meter (−) → LG lead (ECU terminal 7)

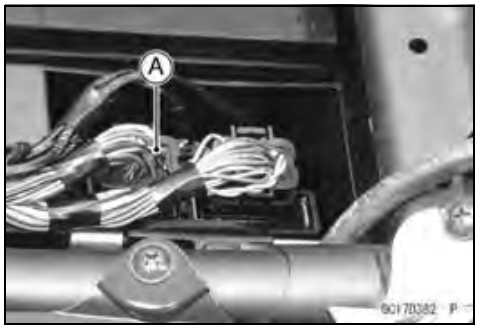

- Turn the ignition switch ON.
- Measure the voltage.

Input Voltage
Standard: about DC 1 ~ 2 V

- Turn the ignition switch OFF.

★If the reading is out of the standard, check the following items.
  ETV Actuator Relay (see ETV Actuator Relay Inspection)
  Wiring (using the ETV Actuator Circuit)

★If the above items are good, replace the throttle body assy (see Throttle Body Assy Removal/Installation) and/or the ECU (see ECU Removal/Installation).

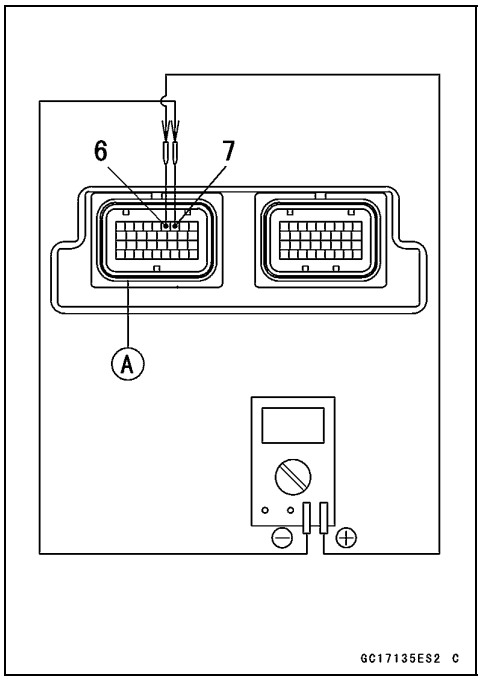

Downloaded from www.vulcanriders-sweden.org

ETV Acutuator (Service Code 58)

ETV Actuator Resistance Inspection



● Remove:
Front Seat (see Front Seat Removal in the Frame chapter)
ETV Actuator Relay [A]

● Connect the hand tester [A] and a 12 V battery [B] to the relay [C] as shown in the figure.

Special Tool - Hand Tester: 57001-1394

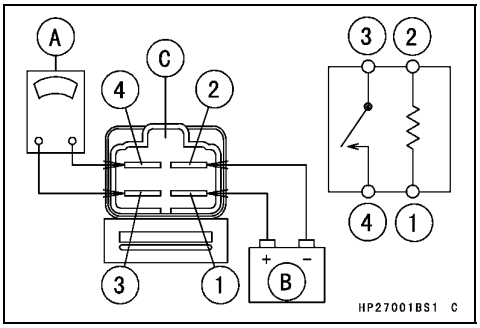

★If the relay does not work as specified, the relay is defective. Replace the relay.

Testing Relay

Hand Tester Range: × 1 Ω

Criteria: When battery is connected ⇒ 0 Ω

When battery is disconnected ⇒ ∞Ω

Relay Coil Terminals: [1] and [2]

Relay Switch Terminals: [3] and [4]

ETV Actuator Circuit

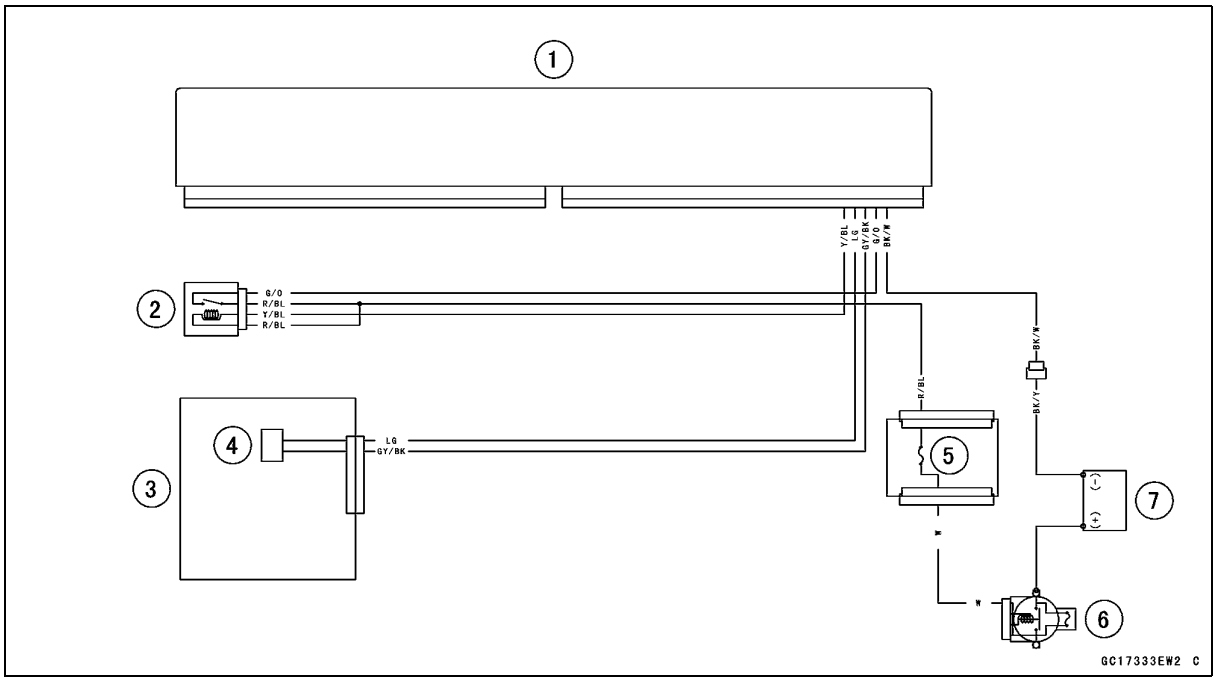

1. ECU
2. ETV Actuator Relay
3. Throttle Position Sensor/ETV Actuator
4. ETV Actuator
5. ETV Actuator Relay Fuse 10 A
6. Main Fuse 30 A
7. Battery

Downloaded from www.vulcanriders-sweden.org

Air Switching Valve (Service Code 64)

Air Switching Valve Removal/Installation

● Refer to the Air Switching Valve Removal/Installation in the Engine Top End chapter.

Air Switching Valve Inspection

● Refer to the Air Switching Valve Unit Test in the Electrical System chapter.

★If the air switching valve is normal, check the wiring for continuity, using the wiring diagram in this section.

Special Tool - Hand Tester: 57001-1394

★If the wiring is good, check the ECU for its ground and power supply (see ECU Power Supply Inspection).

★If the ground and power supply are good, replace the ECU (see ECU Removal/Installation).

Air Switching Valve Circuit

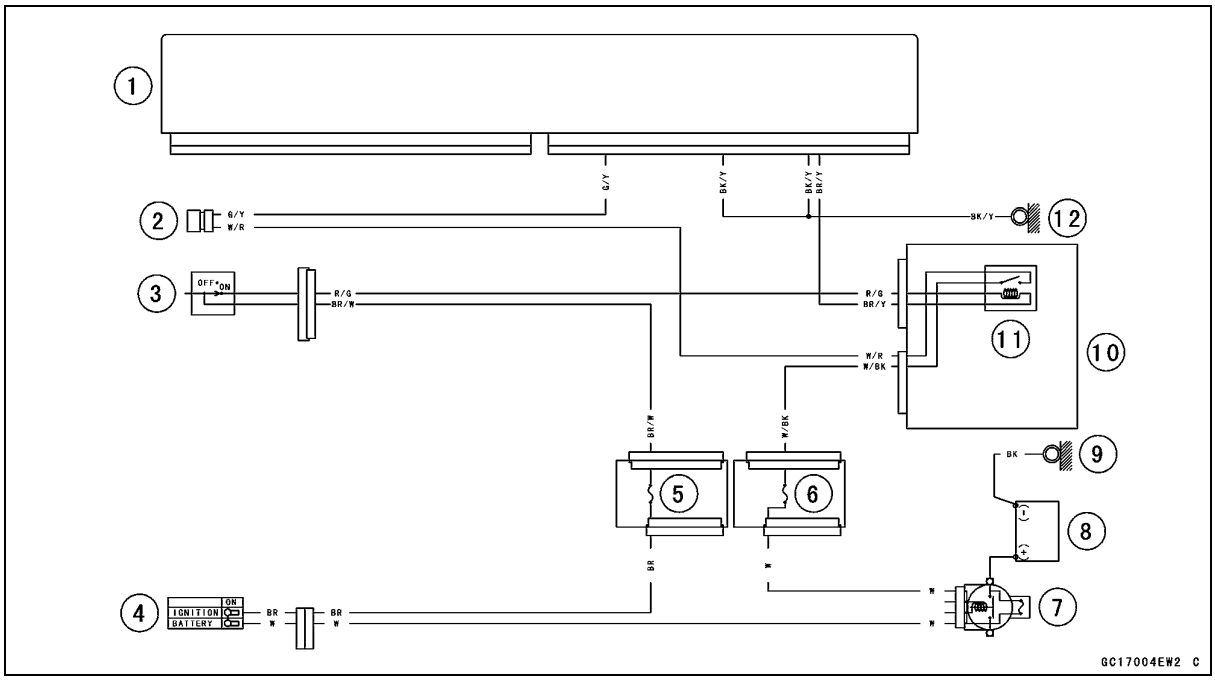

1. ECU
2. Air Switching Valve
3. Engine Stop Switch
4. Ignition Switch
5. Ignition Fuse 10 A
6. ECU Fuse 10 A
7. Main Fuse 30 A
8. Battery
9. Engine Ground
10. Relay Box
11. Fuel Pump Relay
12. Frame Ground 3

Downloaded from www.vulcanriders-sweden.org

Oxygen Sensor Heater (Service Code 67, Equipped Models)

Oxygen Sensor Heater Removal/Installation

The oxygen sensor heater is built in the oxygen sensor. So, the heater itself can not be removed. Remove the oxygen sensor (see Oxygen Sensor Removal (Equipped Models) in the Electrical System chapter).

Oxygen Sensor Heater Resistance Inspection

- Turn the ignition switch OFF.
- Remove:
  Right Side Cover (see Side Cover Removal in the Frame chapter)
  Oxygen Sensor Connector [A]



CAUTION

Do not pull strongly, twist, or bend the oxygen sensor lead. This may cause the wiring open.

- Connect a digital meter [A] to the terminals in each oxygen sensor lead connector [B].
- Measure the oxygen sensor heater resistance.

Oxygen Sensor Heater Resistance
Connections: W lead [C] ←→ W lead [D]
Standard: 6.7 ~ 10.5 Ω at 20° (68°F)

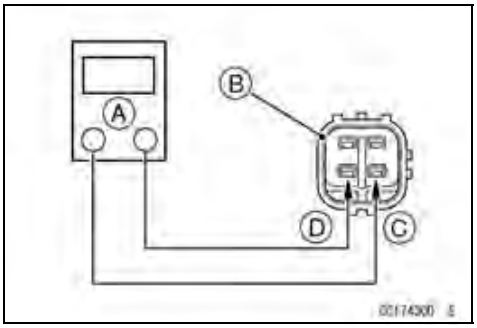

★If the reading is out of the standard, replace the sensor.
★If the reading is within the standard, check the power source voltage (see Oxygen Sensor Heater Power Source Voltage Inspection).

Downloaded from www.vulcanriders-sweden.org

Oxygen Sensor Heater (Service Code 67, Equipped Models)

Oxygen Sensor Heater Power Source Voltage Inspection



NOTE

○*Be sure the battery is fully charged.*

- Turn the ignition switch OFF.
- Disconnect the oxygen sensor lead connector and connect the measuring adapter [A] between these connectors as shown in the figure.
  Main Harness [B]
  Oxygen Sensor [C]

Special Tool - Measuring Adapter: 57001-1700

- Connect a digital meter [D] to the measuring adapter leads.

Oxygen Sensor Heater #1 and #2 Power Source Voltage
Connections to Adapter:
Digital Meter (+) → R (main harness W/G) lead
Digital Meter (–) → Battery (–) terminal

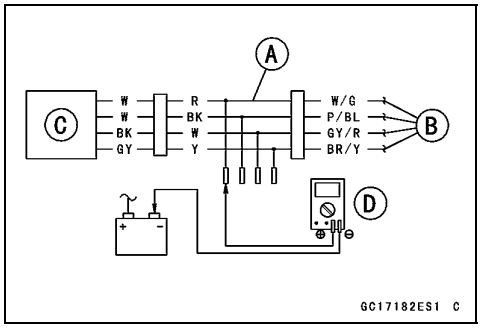

- Measure the power source voltage with the engine stopped and with the connector joined.
- Turn the ignition switch ON.

Power Source Voltage
Standard: Battery Voltage

- Turn the ignition switch OFF.

★If the reading is in specification, but the problem still exists, replace the ECU (see ECU Removal/Installation).

★If the reading is out of the standard, check the following.
Oxygen Sensor Heater Fuse 10 A (see Fuse Inspection in the Electrical System chapter)
Power Source Wiring (see wiring diagram in this section)

★If the fuse and wiring are good, remove the ECU and check the wiring for continuity between main harness connectors.

Special Tool - Hand Tester: 57001-1394

○Disconnect the ECU and sensor connectors.

Wiring Continuity Inspection
ECU Connector [A] ←→
Oxygen Sensor Connector [B]
P/BL lead (ECU terminal 28) [C]

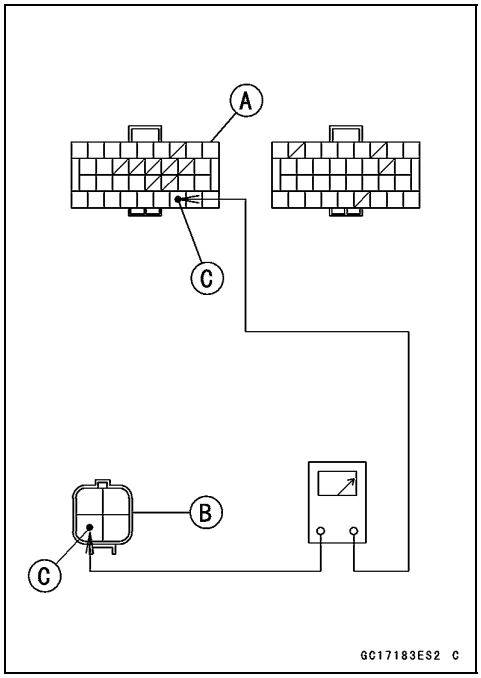

★If the wiring is good, check the ECU for its ground and power supply (see ECU Power Supply Inspection).

★If the ground and power supply are good, replace the ECU (see ECU Removal/Installation).

Downloaded from www.vulcanriders-sweden.org

Oxygen Sensor Heater (Service Code 67, Equipped Models)

Oxygen Sensor Circuit

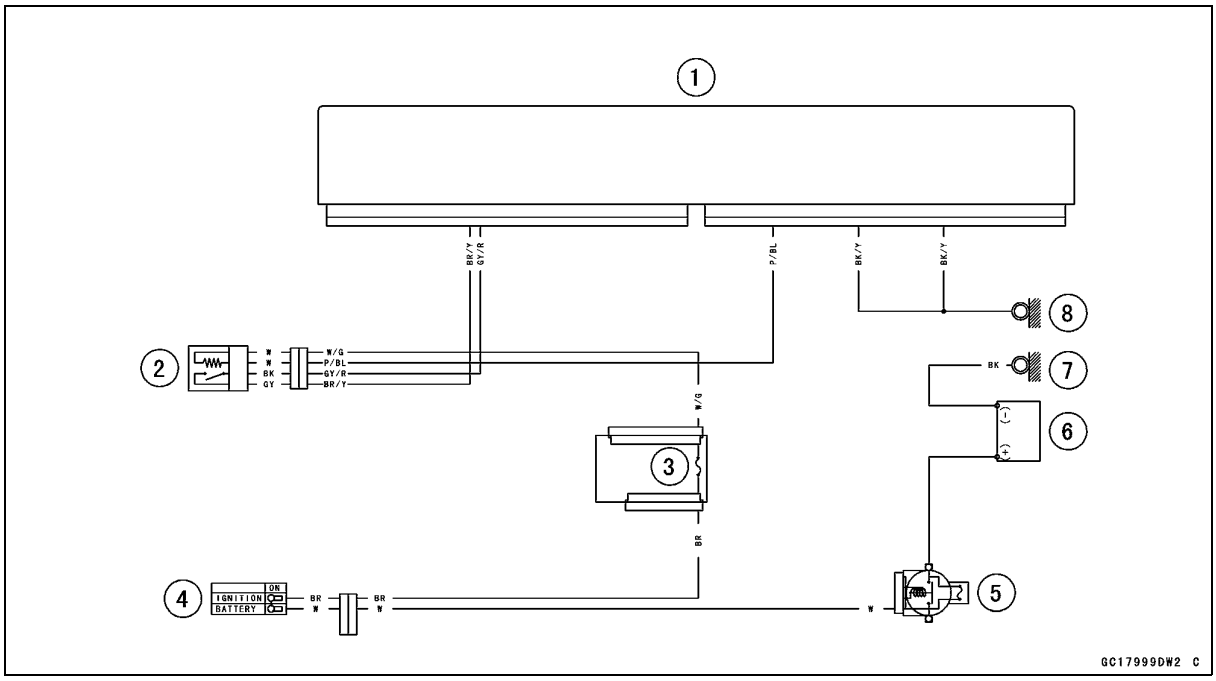

1. ECU
2. Oxygen Sensor
3. Oxygen Sensor Heater Fuse 10 A
4. Ignition Switch
5. Main Fuse 30 A
6. Battery
7. Engine Ground
8. Frame Ground 3

Downloaded from www.vulcanriders-sweden.org

Battery Voltage (Service Code 97)

Battery Voltage Inspection

● Refer to the Charging Condition Inspection in the Electrical System chapter for battery voltage inspection.

★If the battery voltage is good condition, replace the ECU (see ECU Removal/Installation).

Battery Monitor Circuit

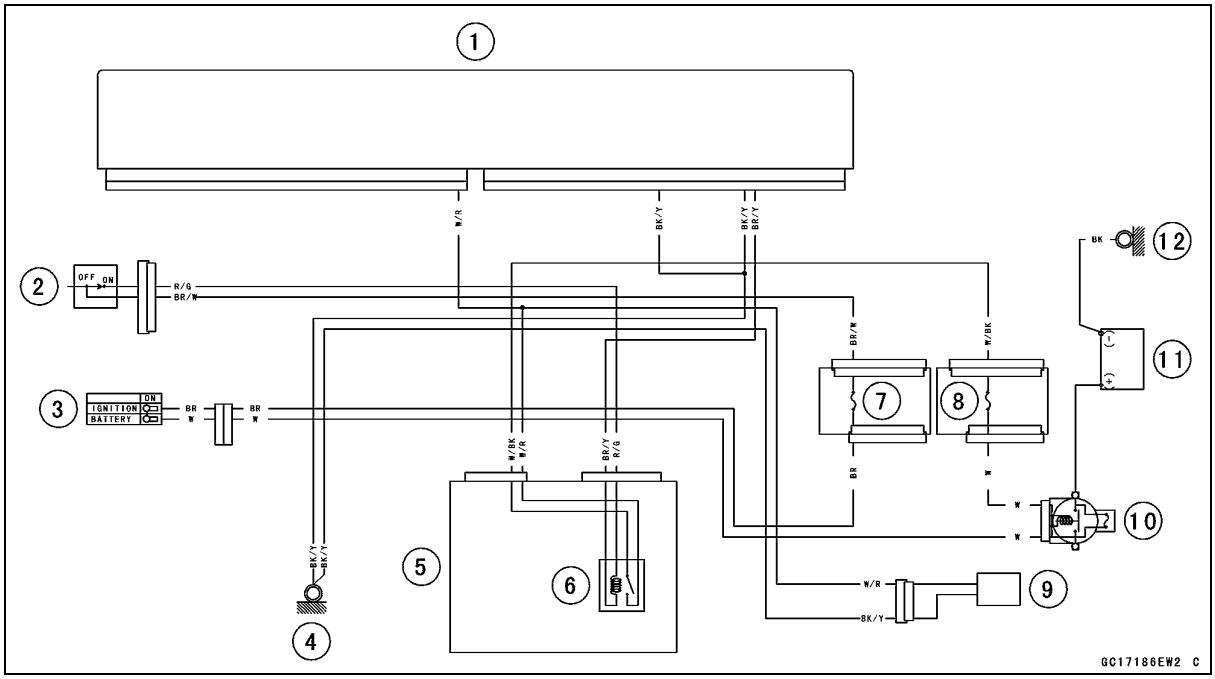

1. ECU
2. Engine Stop Switch
3. Ignition Switch
4. Frame Ground 3
5. Relay Box
6. Fuel Pump Relay
7. Ignition Fuse 10 A
8. ECU Fuse 10 A
9. Fuel Pump
10. Main Fuse 30 A
11. Battery
12. Engine Ground

Downloaded from www.vulcanriders-sweden.org

ETV Control Circuit (Service Code 98)

ETV Control Circuit Inspection



○The ETV control circuit is controlled in the ECU [A].
So, the ETV control circuit cannot be inspected.

● When the service code 98 is displayed on the LCD, replace the ECU (see ECU Removal/Installation).

Downloaded from www.vulcanriders-sweden.org

Warning Indicator Light (LED)

Light (LED) Inspection

○The warning indicator light (LED) [A] is used for the FI indicator, ETV (Electrical Throttle Valve) indicator, oil pressure warning indicator and battery warning indicator.

○In this model, the warning indicator light (LED) goes on or blinks by the data sent from the ECU.

● Refer to the Meter Unit Inspection in the Electrical System chapter.

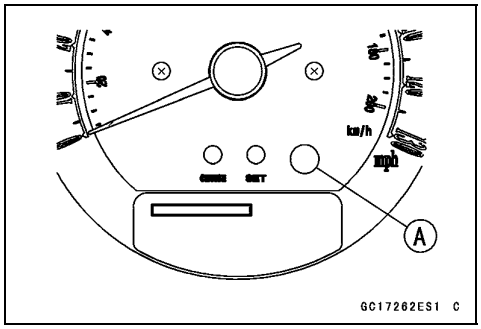

Warning Indicator Light (LED) Circuit

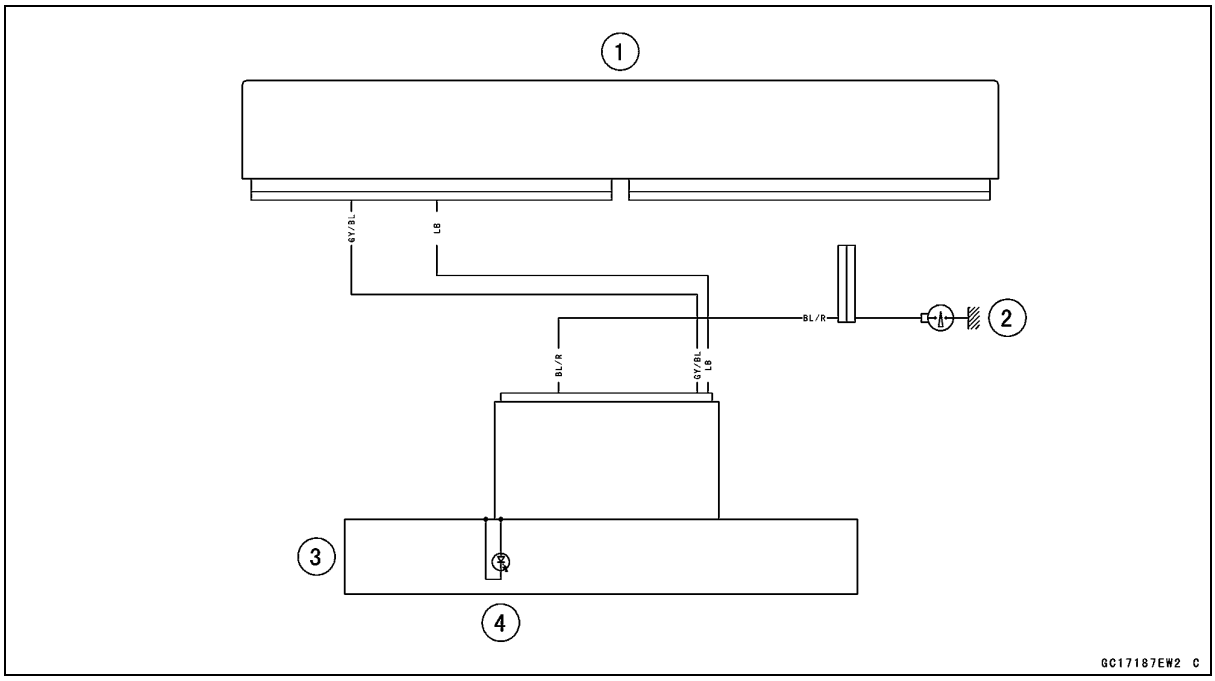

1. ECU
2. Oil Pressure Switch
3. Meter Unit
4. Warning Indicator Light (LED)

Downloaded from www.vulcanriders-sweden.org

ECU

ECU Identification

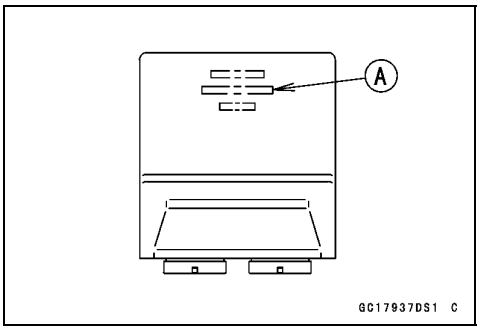

○Most countries have their own regulations, so each ECU has different characteristic. So, do not confuse ECU with each other and use only the ECU for your model. Otherwise, the motorcycle can not clear the regulation.

ECU Identification

Part Number [A]	Specification
21175-0176	US
	CA
	CAL
21175-0186	WVTA (FULL H)
	GB WVTA (FULL H)
	AU
	SEA

ECU Removal

CAUTION
Never drop the ECU, especially on a hard surface. Such a shock to the ECU can damage it.



- Remove:
  Front Seat (see Front Seat Removal in the Frame chapter)
  Battery Case Cover (see Battery Removal in the Electrical System chapter)
  Turn Signal Control Relay [A]
- Remove the ECU [B] with bracket [C].

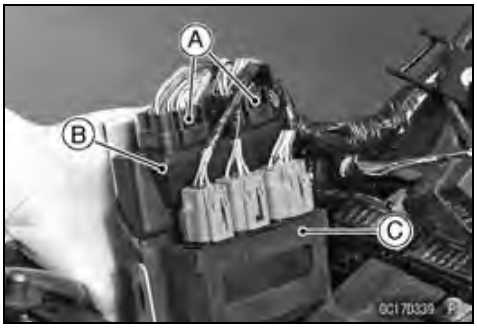

- Disconnect the ECU connectors [A].
- Remove the ECU [B] from the rubber protector [C].

ECU Installation

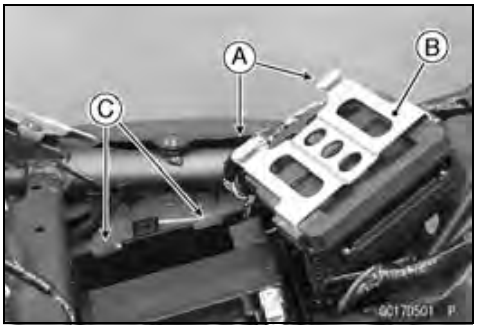

- Install:
  ECU (in Rubber Protector)
  ECU Connectors
- Fit the hooks [A] of the bracket [B] into the recesses [C] of the battery case.
- Install the removed parts.

NOTE

○*When the ECU was replaced with a new one, do not remove the battery, fuse or ECU for 6 seconds for the learning control of the ECU after the ignition switch is turned off.*

○*The ECU does the learning control that is to memorize the full closing position and full opening position of the throttle valve for 6 seconds after the ignition switch is turned OFF.*

Downloaded from www.vulcanriders-sweden.org

ECU

ECU Power Supply Inspection



- Remove:
  Front Seat (see Front Seat Removal in the Frame chapter)
  Battery Case Cover (see Battery Removal in the Electrical System chapter)
- Visually inspect the ECU connectors.

★If the connector is clogged with mud or dust, blow it off with compressed air.

- Remove the ECU (see ECU Removal).
- Visually inspect the terminals [A] of the ECU connectors.

★If the terminals of the main harness connectors are damaged, replace the main harness.

★If the terminals of the ECU connectors are damaged, replace the ECU.

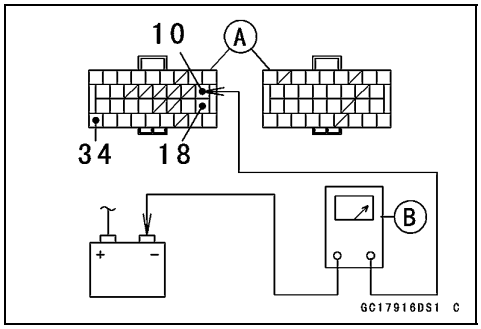

- Turn the ignition switch OFF.
- Disconnect the ECU connectors [A].
- Set the hand tester [B] to the × 1 Ω range and check the following wiring for continuity.

Special Tool - Hand Tester: 57001-1394

ECU Grounding Inspection
Connections:

(I) BK/Y leads (ECU terminal 10, 18 or 34)	**⟷**	**Battery (–) Terminal**
(II) Engine Ground	**⟷**	**Battery (–) Terminal**

Criteria:
Both: 0 Ω

★If no continuity, check the connectors, the engine ground lead, or main harness, and repair or replace them if necessary.

★If the wiring is good, check the power source voltage of the ECU.

NOTE

○*Be sure the battery is fully charged.*

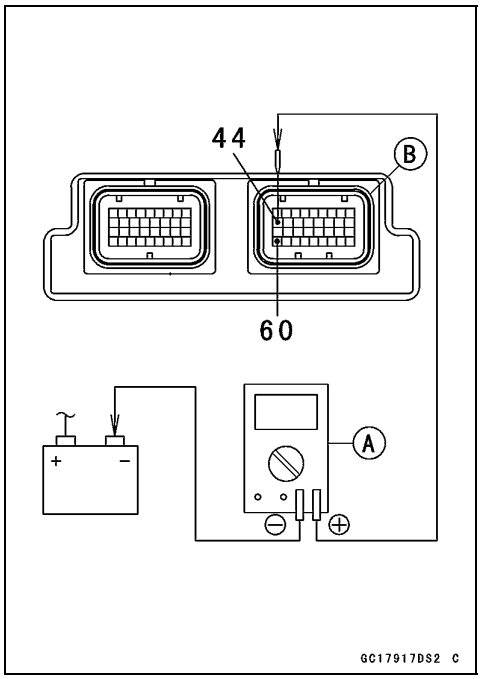

- Connect the ECU connectors.
- Connect a digital meter [A] to the connector [B] with the needle adapter set.

Special Tool - Needle Adapter Set: 57001-1457

ECU Power Supply Inspection
Connections:
(I) Digital Meter (+) → Terminal 44 (BR/W)
Digital Meter (–) → Battery (–) terminal
(II) Digital Meter (+) → Terminal 60 (W/BK)
Digital Meter (–) → Battery (–) terminal
Ignition Switch OFF:
Terminal 44 (BR/W): 0 V
Terminal 60 (W/BK): Battery Voltage
Ignition Switch ON:
Both: Battery Voltage

Downloaded from www.vulcanriders-sweden.org

ECU

★If the reading is out of the specification, check the following.
Main Fuse 30 A (see Fuse Inspection in the Electrical System chapter)
ECU Fuse 10 A (see Fuse Inspection Electrical System chapter)
Power Source Wiring (see ECU Power Source Circuit)
★If the fuse and wiring are good, replace the ECU (see ECU Removal/Installation).

ECU Power Source Circuit

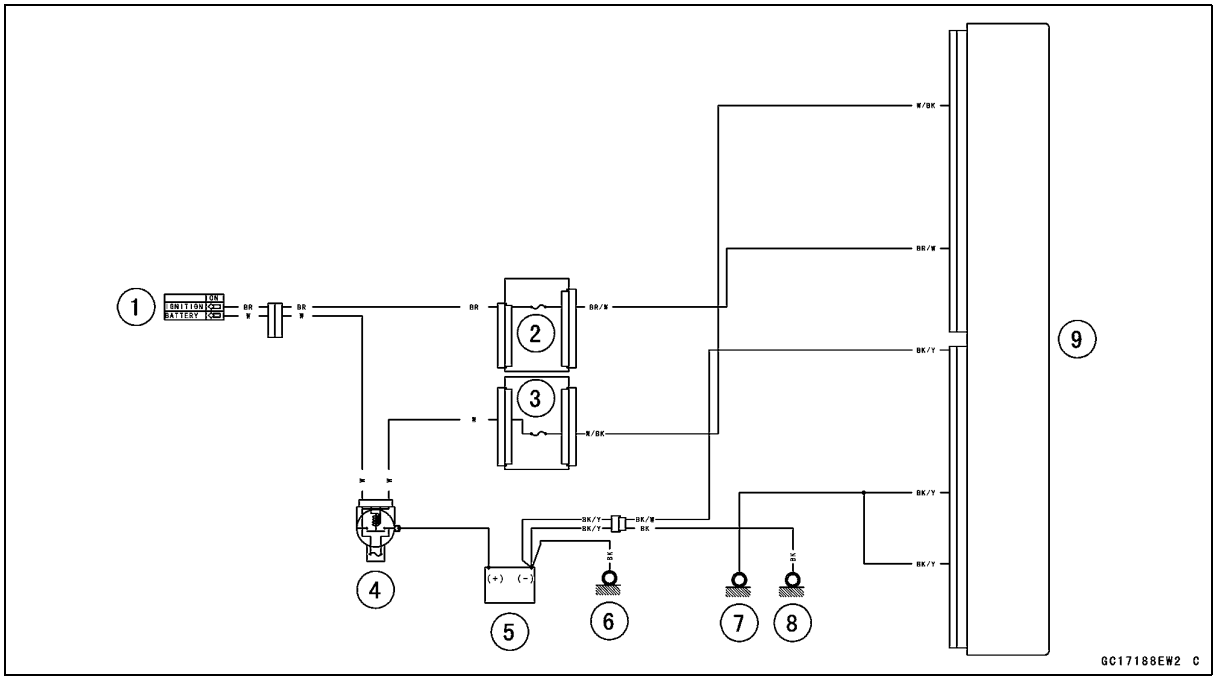

1. Ignition Switch
2. Ignition Fuse 10A
3. ECU Fuse 10 A
4. Main Fuse 30 A
5. Battery
6. Engine Ground
7. Frame Ground 3
8. Frame Ground 6
9. ECU

Downloaded from www.vulcanriders-sweden.org

DFI Power Source

ECU Fuse Removal

● Refer to the 10 A ECU Fuse Removal in the Electrical System chapter.

ECU Fuse Installation

★If a fuse fails during operation, inspect the DFI system to determine the cause, and then replace it with a new fuse of proper amperage.

● Refer to the Fuse Installation in the Electrical System chapter.

ECU Fuse Inspection

● Refer to the Fuse Inspection in the Electrical System chapter.

ECU Main Relay Removal/Installation

○The ECU main relay function is included in the ECU [A] and can not be removed.



ECU Main Relay Inspection

○The ECU main relay function is included in the ECU [A] and can not be inspected.



Downloaded from www.vulcanriders-sweden.org

Fuel Line

Fuel Pressure Inspection

NOTE

○*Be sure the battery is fully charged.*

● Remove:
Fuel Hose (see Fuel Hose Replacement in the Periodic Maintenance chapter)

○Be sure to place a piece of cloth around the fuel outlet pipe of the fuel pump and the delivery pipe of the throttle body assy.

⚠ WARNING

Be prepared for fuel spillage; any spilled fuel must be completely wiped up immediately.
When the fuel hose is disconnected, fuel spills out from the hose and the pipe because of residual pressure. Cover the hose connection with a piece of clean cloth to prevent fuel spillage.

● Install the fuel pressure gauge adapter [A] and fuel hoses (Special Tool: 57001-1607) [B] between the fuel outlet pipe and delivery pipe.
● Secure the fuel hoses with the clamps.
● Connect the pressure gauge [C] to the fuel pressure gauge adapter.



Special Tools - Oil Pressure Gauge, 5 kgf/cm²: 57001-125
Fuel Pressure Gauge Adapter: 57001-1593
Fuel Hose: 57001-1607

⚠ WARNING

Do not try to start the engine with the fuel hoses disconnected.

● Turn the engine stop switch run position.
● Turn the ignition switch ON.

○The fuel pump should operate for 3 seconds, and then should stop.

NOTE

○*After turning on the engine stop switch and ignition switch, inspect the fuel leakage from the connected portion of the special tools.*

CAUTION

Do not drive the fuel pump 3 seconds or more without the fuel in the fuel tank. If the fuel pump is driven without the fuel, it may be damaged.

● Start the engine, and let it idle.
● Measure the fuel pressure with the engine idling.

Fuel Pressure (with Engine Idling)
Standard: 294 kPa (3.0 kgf/cm², 43 psi)

Downloaded from www.vulcanriders-sweden.org

Fuel Line

NOTE

○*The gauge needle will fluctuate. Read the pressure at the average of the maximum and minimum indications.*

- Turn the ignition switch OFF.

★If the fuel pressure is much higher than specified, replace the fuel pump because the fuel pressure regulator in the fuel pump have been clogged or stuck.

★If the fuel pressure is much lower than specified, check the following.
Fuel Line Leakage (see Fuel Injector Fuel Line Inspection)
Amount of Fuel Flow (see Fuel Flow Rate Inspection)

- After above checks, measure the fuel pressure again.
- Remove the fuel pressure gauge, hoses and adapter.
- Install:
Fuel Hose (see Fuel Hose Replacement in the Periodic Maintenance chapter)
Fuel Tank (see Fuel Tank Installation)
- Start the engine and check for fuel leakage.

Fuel Flow Rate Inspection

⚠ WARNING

Gasoline is extremely flammable and can be explosive under certain conditions. Make sure the area is well-ventilated and free from any source of flame or sparks; this includes any appliance with a pilot light. Do not smoke. Turn the ignition switch OFF. Be prepared for fuel spillage; any spilled fuel must be completely wiped up immediately.

NOTE

○*Be sure the battery is fully charged.*

- Turn the ignition switch OFF.
- Wait until the engine cools down.
- Prepare a fuel hose (Special Tool: 57001-1607) and a measuring cylinder.

Special Tool - Fuel Hose: 57001-1607

- Remove the fuel tank bolts.
- Open the fuel tank cap [A] to lower the pressure in the tank.
- Remove the fuel hose from the fuel pump (see Fuel Tank Removal).

○Be sure to place a piece of cloth around the fuel outlet pipe of the fuel pump.



⚠ WARNING

Be prepared for fuel spillage; any spilled fuel must be completely wiped up immediately.
When the fuel hose is disconnected, fuel spills out from the hose and the pipe because of residual pressure. Cover the hose connection with a piece of clean cloth to prevent fuel spillage.

Downloaded from www.vulcanriders-sweden.org

Fuel Line

- Connect the prepared fuel hose [A] to the fuel outlet pipe.
- Secure the fuel hose with a clamp.
- Insert the fuel hose into the measuring cylinder [B].

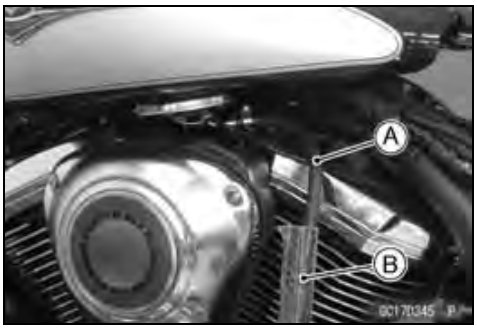

⚠ WARNING

Wipe off spilled out fuel immediately.
Be sure to hold the measuring cylinder vertical.

- Close the fuel tank cap.
- Turn the engine stop switch to run position.
- Turn the ignition switch ON.

○The fuel pump should operate for 3 seconds, and then should stop.

CAUTION

Do not drive the fuel pump 3 seconds or more without the fuel in the fuel tank. If the fuel pump is driven without the fuel, it may be damaged.

- Measure the discharge for 3 seconds.

○Repeat this operation several times.

Amount of Fuel Flow
Standard: 29 mL (0.98 US oz.) or more for 3 seconds

- Turn the ignition switch OFF.

★If the fuel flow is much less than the specified, replace the fuel pump (see Fuel Pump Removal/Installation).

- Install the fuel tank (see Fuel Tank Installation).
- Start the engine and check for fuel leakage.

Downloaded from www.vulcanriders-sweden.org

Fuel Pump

Fuel Pump Removal

⚠ WARNING

Gasoline is extremely flammable and can be explosive under certain conditions. Make sure the area is well-ventilated and free from any source of flame or sparks; this includes any appliance with a pilot light. Do not smoke. Turn the ignition switch OFF and disconnect the battery (–) terminal.
To make fuel spillage minimum, draw the fuel out from the fuel tank when the engine is cold. Be prepared for fuel spillage; any spilled fuel must be completely wiped up immediately.

CAUTION

Never drop the fuel pump, especially on a hard surface. Such a shock to the pump can damage it.

- Draw the fuel out from the fuel tank with a commercially available electric pump.
- Remove the fuel tank (see Fuel Tank Removal).

○Be careful of fuel spillage from the fuel tank since fuel still remains in the fuel tank and fuel pump. Plug the fuel pipe of the fuel tank.

- Turn the fuel tank upside down.
- Unscrew the fuel pump bolts [A], and take out the fuel pump [B].

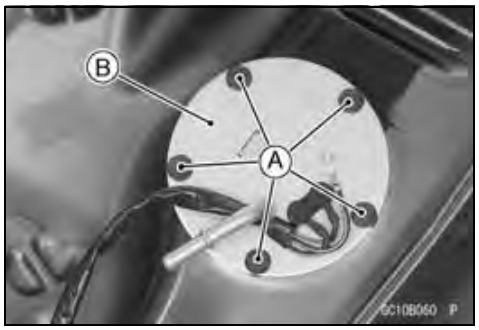

CAUTION

Do not pull the leads of the fuel pump. If they are pulled, the lead terminals may be damaged.

- Discard the fuel pump gasket [A].



Downloaded from www.vulcanriders-sweden.org

Fuel Pump

Fuel Pump Installation

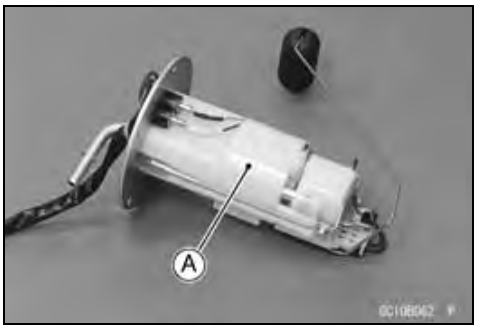

- Remove dirt or dust from the fuel pump [A] by lightly applying compressed air.
- Replace the fuel pump gasket with a new one.

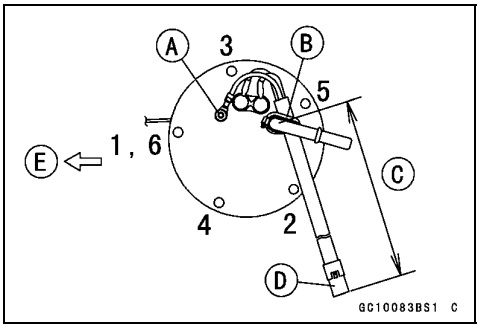

- Check that the fuel pump terminal [A] and band [B] are in place.
  200 ±10 mm (7.87 ±0.39 in.) [C]
  Connector [D]
  Front [E]
- Apply a non-permanent locking agent to the threads of the fuel pump bolts.
- Following the tightening sequence as shown in the figure, tighten the fuel pump bolts to the specified torque.

  Torque - Fuel Pump Bolts: 9.8 N·m (1.0 kgf·m, 87 in·lb)
- Tighten the pump bolts again to check the tightness in the order shown.

Fuel Pump Operation Inspection

NOTE

○*Be sure the battery is fully charged.*

- Turn the engine stop switch to run position.
- Turn the ignition switch ON and make sure that the fuel pump operates (make light sounds) for 3 seconds, and then stops.
- Turn the ignition switch OFF.

★If the pump does not operate as described above, check the operating voltage (see Fuel Pump Operating Voltage Inspection).

Fuel Pump Operating Voltage Inspection

NOTE

○*Be sure the battery is fully charged.*

- Turn the ignition switch OFF.

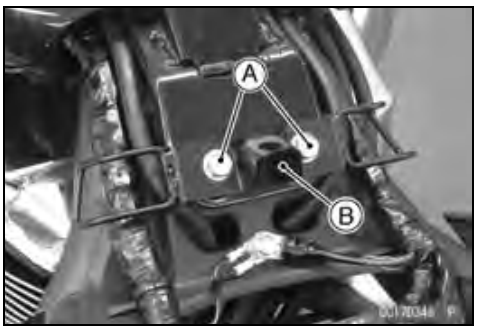

- Remove:
  Front Seat (see Front Seat Removal in the Frame chapter)
  Fuel Tank Mounting Bolts [A]
  Bracket [B]
- Lift up the rear end of the fuel tank, using a suitable wood block.

Downloaded from www.vulcanriders-sweden.org

Fuel Pump

● Disconnect the fuel pump lead connector and connect the measuring adapter [A] between these connectors as shown in the figure.
Main Harness [B]
Fuel Pump [C]



Special Tool - Measuring Adapter: 57001-1700

● Connect a digital meter [D] to the measuring adapter leads.

Fuel Pump Operating Voltage
Connections to Adapter:
Digital Meter (+) → R (pump BK/Y) lead
Digital Meter (–) → BK (pump BK/W) lead

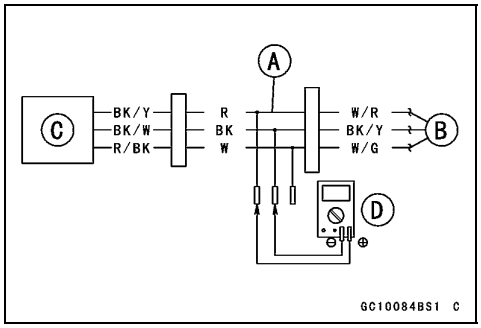

● Measure the operating voltage with engine stopped and with the connector joined.
● Turn the engine stop switch run position.
● Turn the ignition switch ON.

Operating Voltage
Standard: Battery Voltage for 3 seconds, and then 0 V

● Turn the ignition switch OFF.
★If the reading is not the standard, check the fuel pump relay (see Relay Circuit Inspection in the Electrical System chapter).
★If the fuel pump relay is normal, check the wiring for continuity (see Fuel Pump Circuit).

Special Tool - Hand Tester: 57001-1394

★If the wiring is good, check the ECU for its ground and power supply (see ECU Power Supply Inspection).
★If the ground and power supply are good, replace the ECU (see ECU Removal/Installation).
★If the reading is in the specification, but the pump does not operate, replace the fuel pump (see Fuel Pump Removal/Installation).

Pressure Regulator Removal

○The pressure regulator [A] is built into the fuel pump and can not be removed.

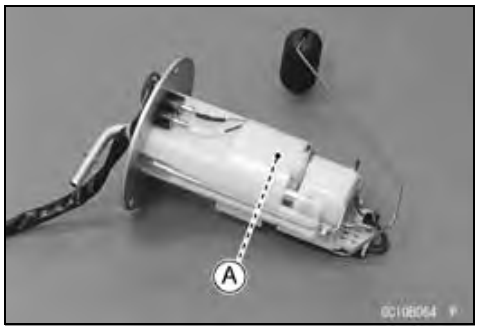

Downloaded from www.vulcanriders-sweden.org

Fuel Pump

Fuel Filter Cleaning

○The fuel filter [A] is built into the pump and can not be cleaned or checked.

★If the fuel filter is suspected of clogging or being damaged, replace it with the fuel pump as a set.



Fuel Pump Circuit

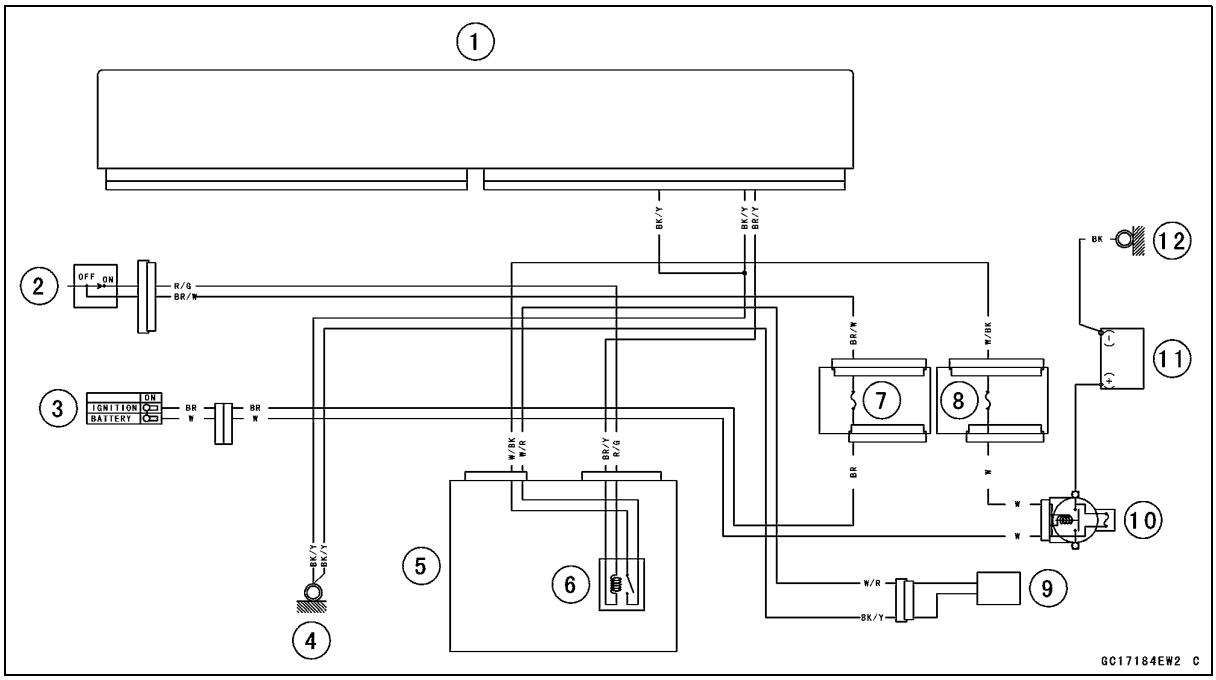

1. ECU
2. Engine Stop Switch
3. Ignition Switch
4. Frame Ground 3
5. Relay Box
6. Fuel Pump Relay
7. Ignition Fuse 10 A
8. ECU Fuse 10 A
9. Fuel Pump
10. Main Fuse 30 A
11. Battery
12. Engine Ground

Downloaded from www.vulcanriders-sweden.org

Fuel Injectors

Fuel Injector Removal

- Remove:
  Fuel Tank (see Fuel Tank Removal)
  Throttle Body Assy (see Throttle Body Assy Removal)
  Fuel Injector Connectors [A]

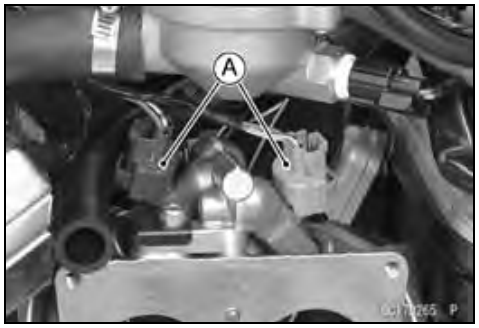

- Remove:
  Delivery Joint Bolt [A]
  Bracket [B]

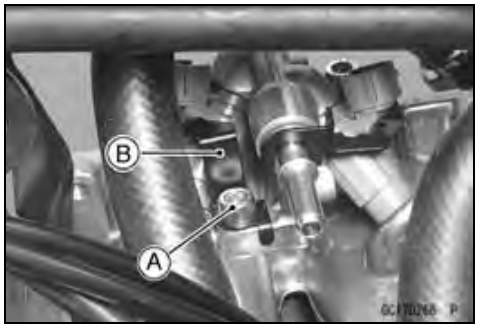

- Remove:
  Delivery Joint Bolt [A]
  Bracket [B]

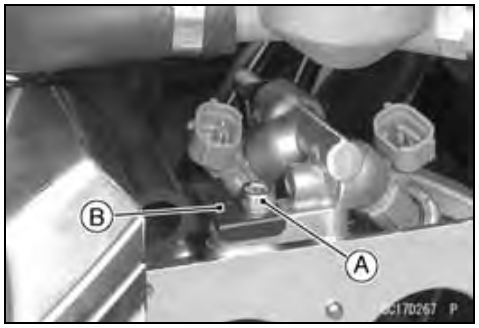

- Remove:
  Delivery Joint Assembly [A]



- Remove:
  Fuel Injectors [A]

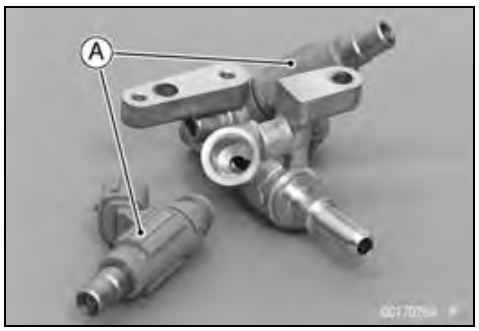

Downloaded from www.vulcanriders-sweden.org

Fuel Injectors

Fuel Injector Installation

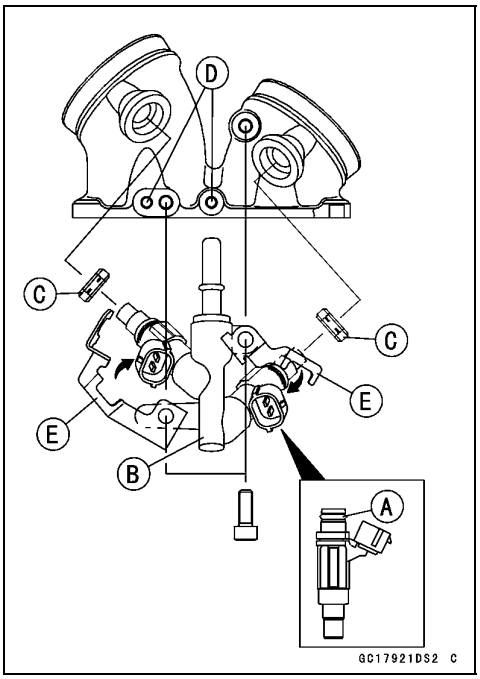

- Before installing the fuel injector, blow away dirt or dust from the delivery joint by applying compressed air.
- Replace the O-rings [A] of each fuel injector with new ones.
- Apply engine oil to the new O-rings, insert them to the delivery joint assembly [B] and confirm whether the injectors turn smoothly or not.
- Replace the dust seals [C] with new ones.
- Apply engine oil to the new dust seals.
- Be sure that the pins [D] are in position.
- Install the delivery joint assembly and brackets [E] as shown in the figure.
- Apply a non-permanent locking agent to the delivery joint bolts.
- Tighten:

Torque - Delivery Joint Bolts: 9.8 N·m (1.0 kgf·m, 87 in·lb)

- Connect the fuel injector lead connectors.

○The front fuel injector lead has a tag of “F” mark.

- Install the removed parts.

Fuel Injector Audible Inspection

NOTE

○*Be sure the battery is fully charged.*

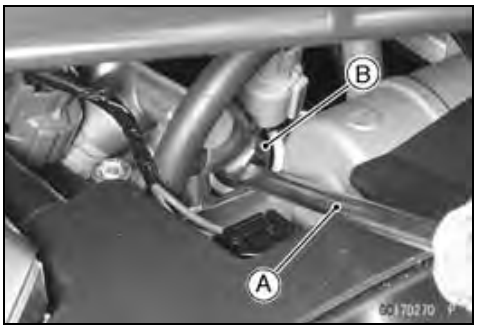

- Start the engine, and let it idle.
- Apply the tip of a screwdriver [A] to the fuel injector. Put the grip end onto your ear, and listen whether the fuel injector is clicking or not.

Fuel Injector [B]

○A sound scope can also be used.

○The click interval becomes shorter as the engine speed rises.

- Do the same for the other fuel injectors.

★If all the fuel injectors click at regular intervals, the fuel injectors are normal.

- Turn the ignition switch OFF.

★If any fuel injector does not click, check the fuel injector resistance (see Fuel Injector Resistance Inspection).

Fuel Injector Resistance Inspection

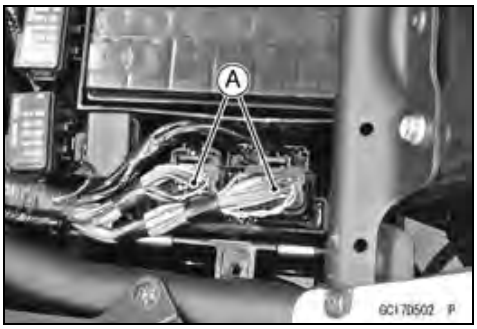

- Turn the ignition switch OFF.
- Remove:

Front Seat (see Front Seat Removal in the Frame chapter)

Battery Case Cover (see Battery Removal in the Electrical System chapter)

- Disconnect the ECU connectors [A].

Downloaded from www.vulcanriders-sweden.org

Fuel Injectors

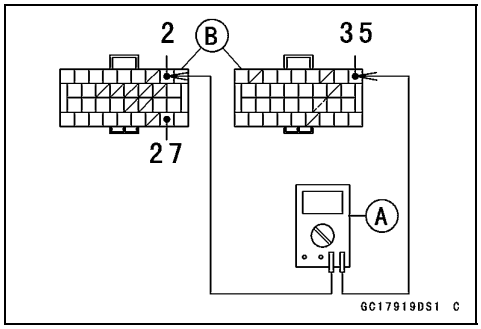

● Connect the digital meter [A] to the harness connectors [B] with the needle adapter set.

Special Tool - Needle Adapter Set: 57001-1457

Fuel Injector Resistance
Connection:
Fuel Injector #1
Digital Meter → BL/O lead (ECU terminal 27)
Digital Meter → W/R lead (ECU terminal 35)
Fuel Injector #2
Digital Meter → BL/Y lead (ECU terminal 2)
Digital Meter → W/R lead (ECU terminal 35)

● Measure the throttle position sensor resistance.

Fuel Injector Resistance
Standard: About 11.7 ~ 12.3 Ω at 20 °C (68 °F)

★If the reading is within the standard, check the output voltage (see Fuel Injector Output Voltage Inspection).
★If the reading is out of the standard, replace the fuel injector (see Fuel Injector Removal/Installation) or check the wiring for continuity (see Fuel Injector Circuit).

Fuel Injector Output Voltage Inspection

NOTE

○*Be sure the battery is fully charged.*

● Turn the ignition switch OFF.
● Remove:
Front Seat (see Front Seat Removal in the Frame chapter)
Battery Case Cover (see Battery Removal in the Electrical System chapter)

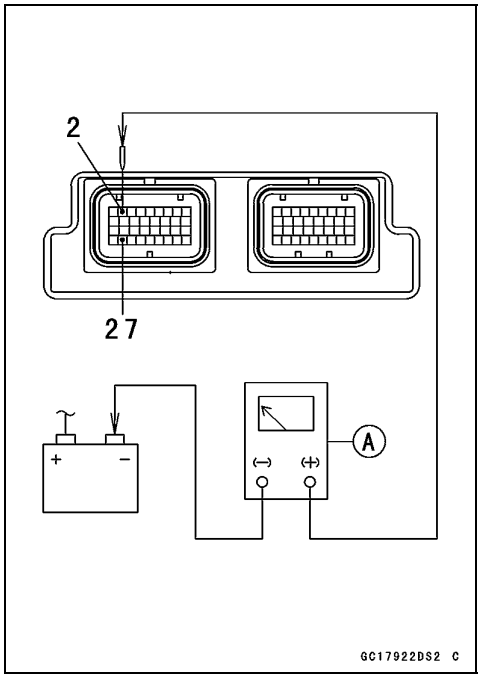

● Connect the hand tester [A] to the connector joined with the needle adapter set.

Special Tools - Hand Tester: 57001-1394
Needle Adapter Set: 57001-1457

Fuel Injector Output Voltage
Connections ECU Connector:
Fuel Injector #1
Digital Meter (+) → BL/O lead (ECU terminal 27)
Digital Meter (−) → Battery (−) terminal [C]
Fuel Injector #2
Digital Meter (+) → BL/Y lead (ECU terminal 2)
Digital Meter (−) → Battery (−) terminal [C]

● Turn the engine stop switch to run position.
● Turn the ignition switch ON.
● Measure the output voltage.

Output Voltage
Standard: About Battery Voltage for 3 seconds, and then 0 V

Downloaded from www.vulcanriders-sweden.org

Fuel Injectors

- Turn the ignition switch OFF.

★If the reading is in the specification, but the injector does not operate, replace the ECU (see ECU Removal/Installation).

★If the reading is out of the specification, check the input voltage (see Fuel Injector Input Voltage Inspection).

Fuel Injector Input Voltage Inspection

NOTE

○*Be sure the battery is fully charged.*

- Turn the ignition switch OFF.
- Remove:
  Fuel Tank (see Fuel Tank Removal)
  Right Air Cleaner Housing (see Right Air Cleaner Housing Removal)
- Disconnect the injector connector and connect the measuring adapter [A] between these connectors as shown in the figure.
  Main Harness [B]
  Fuel Injector #1 [C]



Special Tool - Measuring Adapter Set: 57001-1700

- Connect the hand tester [D] to the measuring adapter leads.

Special Tool - Hand Tester: 57001-1394

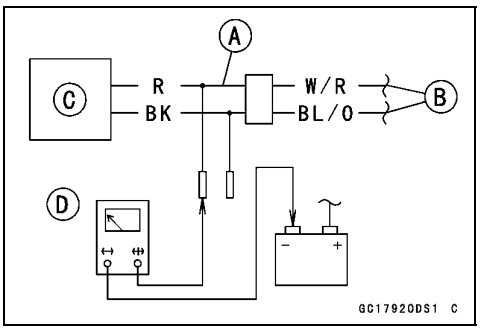

Fuel Injector Input Voltage
Connections to Adapter:
Fuel Injector #1, #2
Digital Meter (+) → R (main harness W/R) lead
Digital Meter (−) → Battery (−) terminal [C]

- Turn the engine stop switch to run position.
- Turn the ignition switch ON.
- Measure the output voltage.

Intput Voltage
Standard: About Battery Voltage for 3 seconds, and then 0 V

- Turn the ignition switch OFF.

★If the reading is in the specification, check the wiring for continuity to ECU connector (see Fuel Injector Circuit).

★If the reading is out of the specification, check the following.
  Fuel Pump Relay (see Relay Circuit Inspection in the Electrical System chapter)
  Wiring for Power Source (see Fuel Injector Circuit)

★If all parts are good, but the injector does not operate, replace the ECU (see ECU Removal/Installation).

Downloaded from www.vulcanriders-sweden.org

Fuel Injectors

Fuel Injector Fuel Line Inspection

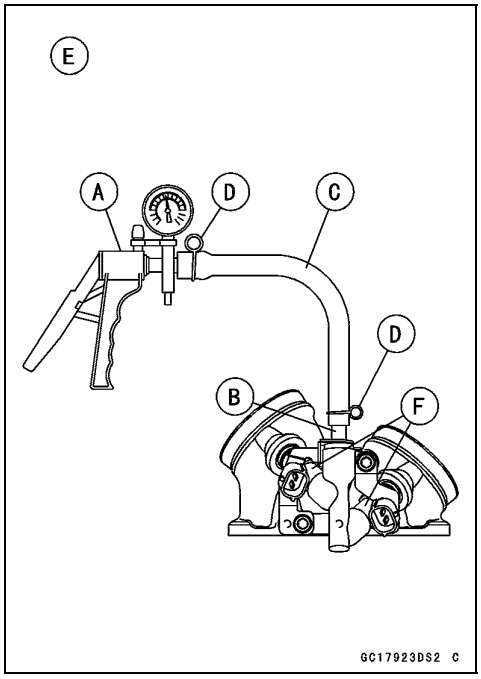

● Remove:
Fuel Tank (see Fuel Tank Removal)
Left Air Cleaner Housing (see Left Air Cleaner Housing Removal)
Fuel Hoses (see Fuel Hose Replacement in the Periodic Maintenance chapter)
○Be sure to place a piece of cloth around the fuel outlet pipe of the fuel pump and the delivery pipe.

⚠ WARNING

Be prepared for fuel spillage; any spilled fuel must be completely wiped up immediately.
When the fuel hose is disconnected, fuel spills out from the hose and the pipe because of residual pressure. Cover the hose connection with a piece of clean cloth to prevent fuel spillage.

● Check the injector fuel line for leakage as follows.
○Connect a commercially available vacuum/pressure pump [A] to the nipple of the delivery pipe [B] with the fuel hose [C] (both ends with the clamps [D]) as shown in the figure.
Upper View [E]
○Apply soap and water solution to the areas [F] as shown in the figure.
○Watching the pressure gauge, squeeze the pump lever, and build up the pressure until the pressure reaches the maximum pressure.

Injector Fuel Line Maximum Pressure
Standard: 300 kPa (3.06 kgf/cm², 43 psi)

CAUTION

During pressure testing, do not exceed the maximum pressure for which the system is designed.

○Watch the gauge for at least 6 seconds.
★If the pressure holds steady, the fuel line is good.
★If the pressure drops at once or if bubbles are found in the area, the fuel line is leaking. Replace the delivery joint assy and injectors.
○Repeat the leak test, and check the fuel line for no leakage.
● Install:
Fuel Hoses (see Fuel Hose Replacement in the Periodic Maintenance chapter)
Left Air Cleaner Housing (see Left Air Cleaner Housing Installation)
Fuel Tank (see Fuel Tank Installation)
● Start the engine and check for fuel leakage.

Downloaded from www.vulcanriders-sweden.org

Fuel Injectors

Fuel Injector Circuit

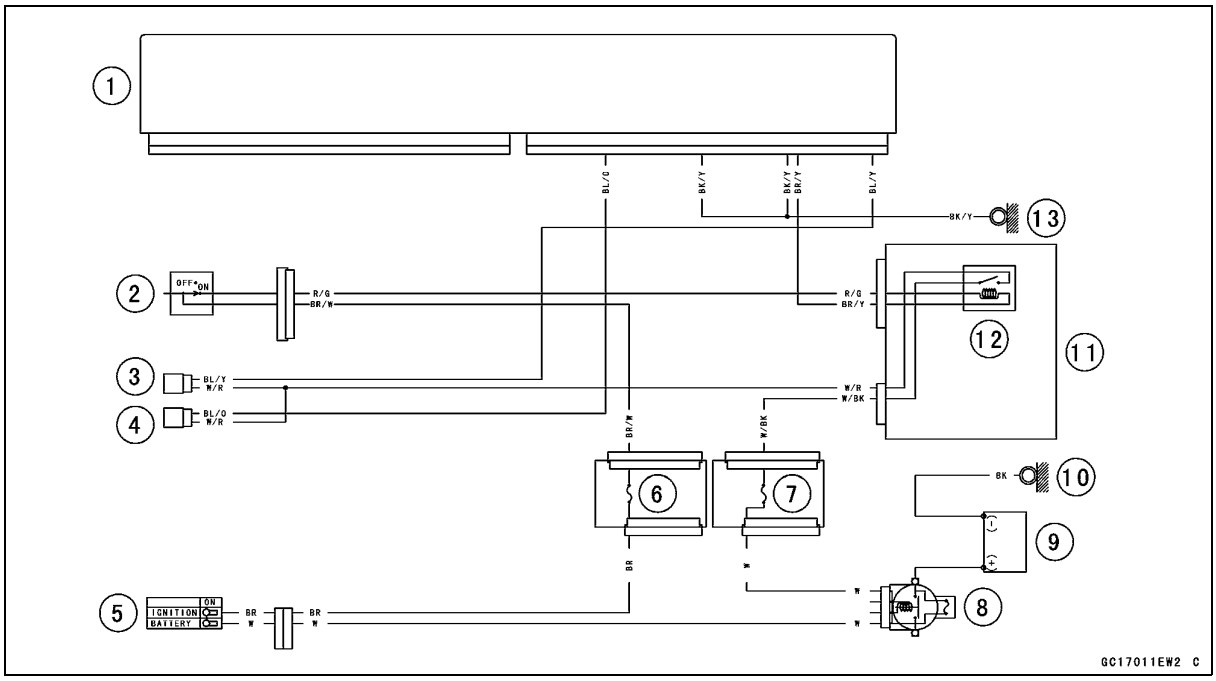

1. ECU
2. Engine Stop Switch
3. Fuel Injector #2
4. Fuel Injector #1
5. Ignition Switch
6. Ignition Fuse 10 A
7. ECU Fuse 10 A
8. Main Fuse 30 A
9. Battery
10. Engine Ground
11. Relay Box
12. Fuel Pump Relay
13. Frame Ground 3

Downloaded from www.vulcanriders-sweden.org

Throttle Grip and Cables

Free Play Inspection

- Refer to the Throttle Control System Inspection in the Periodic Maintenance chapter.

Free Play Adjustment

- Refer to the Throttle Control System Inspection in the Periodic Maintenance chapter.

Cable Installation

- Install the throttle cables in accordance with the Cable, Wire, and Hose Routing section in the Appendix chapter.
- Install the lower ends of the throttle cables in the throttle pulley on the throttle body assy after installing the upper ends of the throttle cables in the grip.
- After installation, adjust each cable properly (see Throttle Control System Inspection in the Periodic Maintenance chapter).

⚠ WARNING

Operation with incorrectly routed or improperly adjusted cables could result in an unsafe riding condition.

- Confirm the following inspections.

Cruise Control Cancel Switch (Throttle) Operation Inspection:

- Refer to the cruise control cancel switch (throttle) operates (see Cruise Control Cancel Switch Inspection in the Electrical System chapter)

★If the cruise control cancel switch (throttle) function does not work correctly, adjust the throttle grip free play with the accelerator cable adjuster [A] and then use the decelerator cable adjuster [B] (see Throttle Control System Inspection in the Periodic Maintenance chapter).

- Confirm the cruise control cancel switch (throttle) operation again.

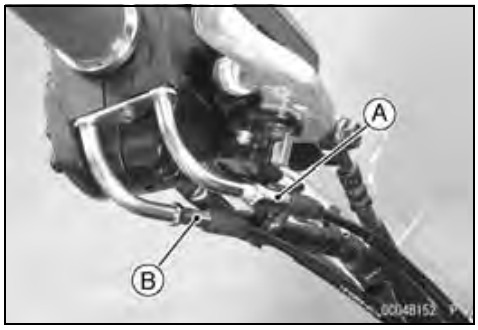

Full Throttle Pulley Position Inspection:

- Remove:
  Right Air Cleaner Housing (see Right Air Cleaner Housing Removal in the Fuel System (DFI) chapter)
- Turn and hold the throttle grip to full throttle position.
- Confirm that the stopper [A] of the pulley touches the post [B] of the throttle body.

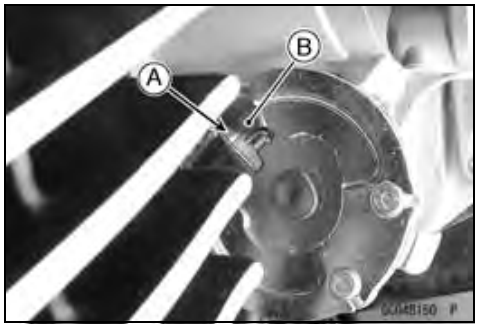

Downloaded from www.vulcanriders-sweden.org

Throttle Grip and Cables

★If the stopper of the pulley does not touch, adjust the throttle grip free play with the accelerator cable adjuster [A] and then use the decelerator cable adjuster [B] (see Throttle Control System Inspection in the Periodic Maintenance chapter).

- Confirm the full throttle pulley position again.
- Install:

  Right Air Cleaner Housing (see Right Air Cleaner Housing Installation)

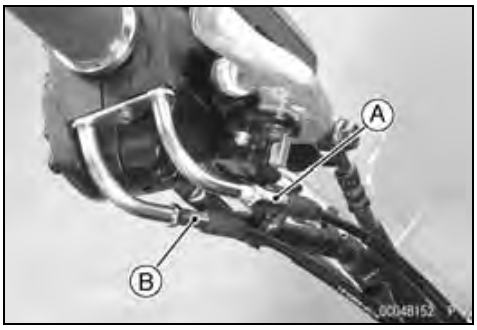

Cable Lubrication

- Refer to the Chassis Parts Lubrication in the Periodic Maintenance chapter.

Downloaded from www.vulcanriders-sweden.org

Throttle Body Assy

Idle Speed Inspection/Adjustment

● Refer to the Idle Speed Inspection/Adjustment in the Periodic Maintenance chapter.

Throttle Body Assy Removal

⚠ WARNING

Gasoline is extremely flammable and can be explosive under certain conditions. Make sure the area is well-ventilated and free from any source of flame or sparks; this includes any appliance with a pilot light. Do not smoke. Turn the ignition switch OFF. Be prepared for fuel spillage: any spilled fuel must be completely wiped up immediately.

CAUTION

Never drop the throttle body assy, especially on a hard surface. Such a shock to the body assy can damage it.

● Remove:
Fuel Tank (see Fuel Tank Removal)
Right Air Cleaner Housing (see Right Air Cleaner Housing Removal)
Cable Holder Screw [A] and Cable Holder [B]
Right Handlebar Switch Housing Screw [C]

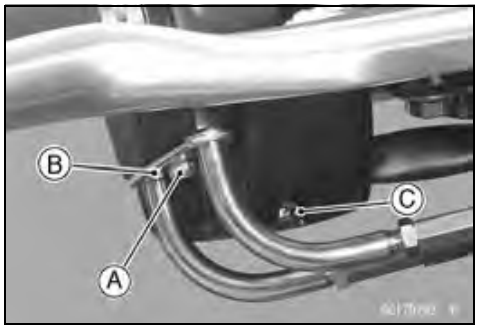

● Remove:
Cap Screws [A]
Cap [B]
Right Handlebar Switch Housing [C]

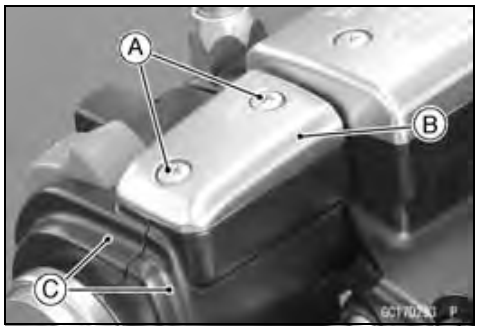

● Remove:
Throttle Cable Ends [A]

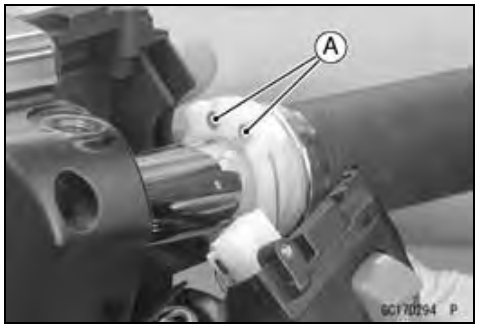

Downloaded from www.vulcanriders-sweden.org

Throttle Body Assy

● Remove:
Vacuum Hose [A]
Cruise Control Cancel Switch (Throttle)
Lead Connector [B]

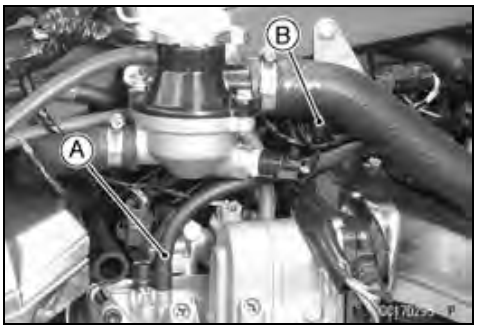

● Remove:
Throttle Position Sensor Connector [A]
Accelerator Position Sensor Connector [B]
Throttle Body Assy Holder Bolts [C]
Throttle Body Assy [D] (from Inlet Manifold)

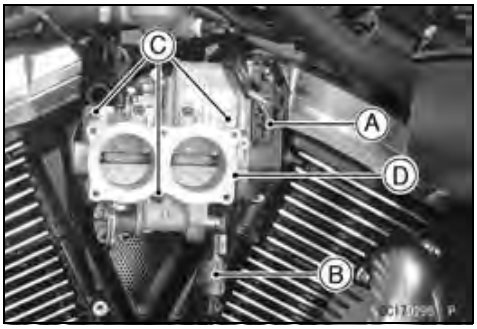

● Remove:
Throttle Cable Holder Plate Screw [A]
Stopper [B]
Throttle Cables [C]
Throttle Body Assy
● Stuff a piece of lint-free clean cloth into the inlet ports of the inlet manifold to keep dirt out of the engine.

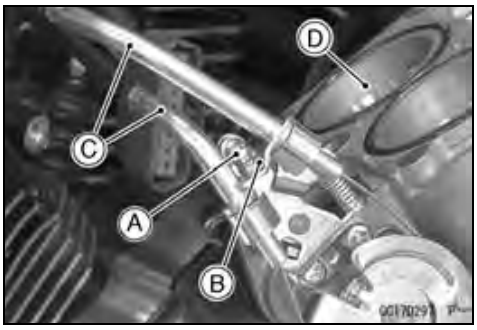

CAUTION
If dirt gets into the engine, excessive engine wear and possibly engine damage will occur.

Throttle Body Assy Installation

● Check the throttle bores [A] for carbon deposits.
★If any carbon accumulates, wipe the carbon off the throttle bores, using a lint-free cloth [B] penetrated with a high -flash point solvent.

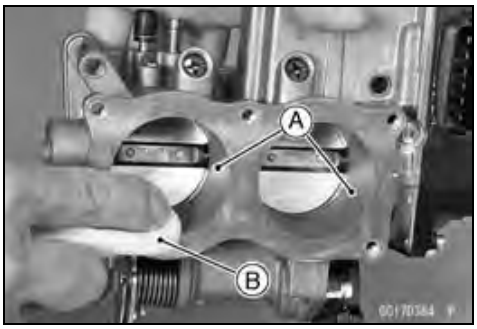

● Apply a thin coat of grease to the throttle cable lower ends.
● Fit the accelerator cable end [A] and the decelerator cable end [B] into the throttle pulley.
● Hold the cables with the stopper plate [C]
● Tighten:

Torque - Throttle Calbe Holder Plate Screw [D] : 2.0 N·m (0.20 kgf·m, 18 in·lb)

● Run the throttle cables correctly (see Cable, Wire, and Hose Routing section in the Appendix chapter).

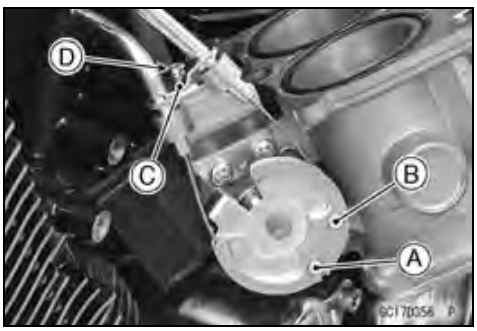

Downloaded from www.vulcanriders-sweden.org

Throttle Body Assy

- Apply a thin coat of grease to the throttle cable upper ends.
- Install the upper ends of the throttle cables in the grip.
- Fit the projection [A] of the right switch housing into the hole [B] of the handlebar.

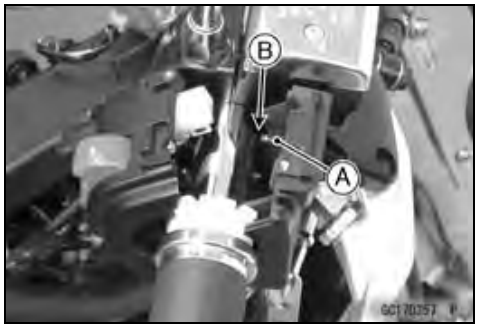

- Install:
  Right Switch Housing [A]
  Cap [B]
- Tighten the cap screws [C] temporarily.
- Tighten the right switch housing screw [D] securely.
- Tighten the cap screws securely.
- Turn the throttle grip and make sure that the throttle pulley moves smoothly and return by spring force.
- Run the leads and hoses correctly (see Cable, Wire, and Hose Routing section in the Appendix chapter).

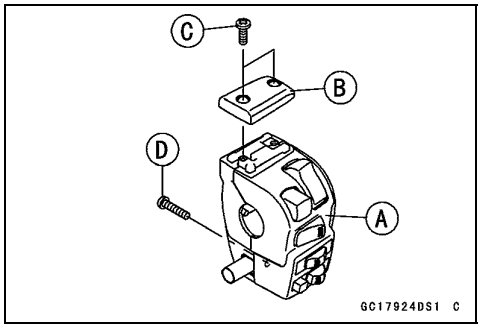

- Before assembly, visually inspect the mating surfaces [A] for any damage, like dent, nick, rust, flaw, and crack.
- Nick or rust damage can sometimes be repaired by using emery paper (first No. 200, then 400) to remove sharp edges or raised areas.

★If the damage is not repairable, replace the throttle body and/or the inlet manifold to prevent leakage.

- With a high-flash point solvent, clean off the mating surfaces and wipe dry.
- Be sure to install the dowel pins [B].
- Apply grease to the new O-rings [C] and fit them into the groove. Be careful not to pinch the gasket between the mating surfaces.

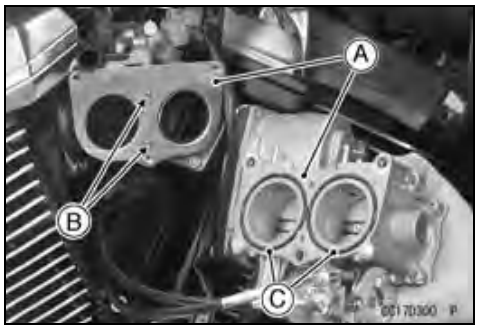

Downloaded from www.vulcanriders-sweden.org

Throttle Body Assy

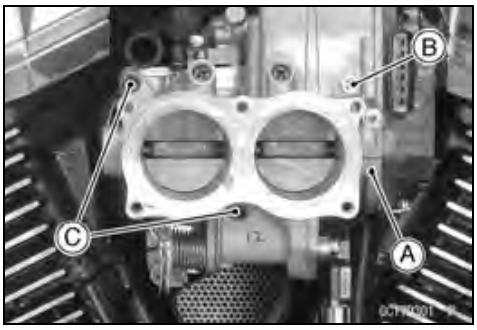

- Install:
  Throttle Body Assy [A]
  Throttle Body Assy Holder Bolt [B], 75 mm (3.0 in.)
  Throttle Body Assy Holder Bolts [C], 60 mm (2.4 in.)
- Tighten:

Torque - Throttle Body Assy Holder Bolts: 9.8 N·m (1.0 kgf·m, 87 in·lb)

- Install:
  Cruise Control Cancel Switch (Throttle) Lead Connector
  Vacuum Hose
- Install the removed parts (see appropriate chapters).

NOTE

○*When the throttle body was replaced with a new one, do not remove the battery, fuse or ECU for 6 seconds for the learning control of the ECU after the ignition switch is turned off.*

○*The ECU does the learning control that is to memorize the full closing position and full opening position of the throttle valve for 6 seconds after the ignition switch is turned OFF.*

- Adjust:
  Throttle Grip Free Play (see Throttle Control System Inspection in the Periodic Maintenance chapter)
  Idle Speed (see Idle Speed Adjustment in the Periodic Maintenance chapter)

Throttle Body Assy Disassembly

CAUTION

Do not remove, disassemble or adjust the throttle position sensor/ETV actuator [A], accelerator position sensor [B], bypass screws [C], tempering screw [D], throttle link mechanism [E] and throttle body assy [F], because they are adjust or set surely at the manufacturer. Adjustment of these parts could result in poor performance, requiring replacement of the throttle body assy.

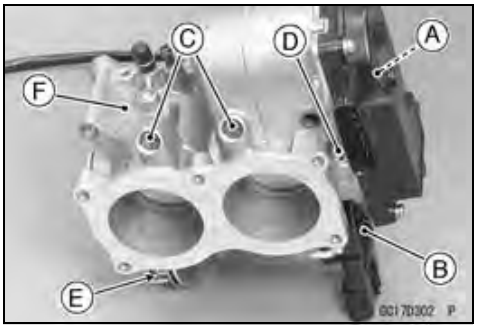

- Remove:
  Throttle Body Assy (see Throttle Body Assy Removal)
  Cruise Control Cancel Switch (Throttle) Mounting Nut [A]
  Spring Washer and Plane Washer
  Cruise Control Cancel Switch (Throttle) [B]

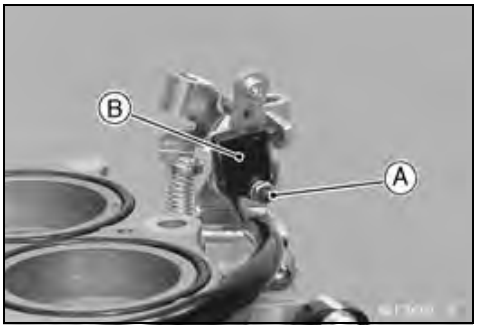

Downloaded from www.vulcanriders-sweden.org

Throttle Body Assy

Throttle Body Assy Assembly

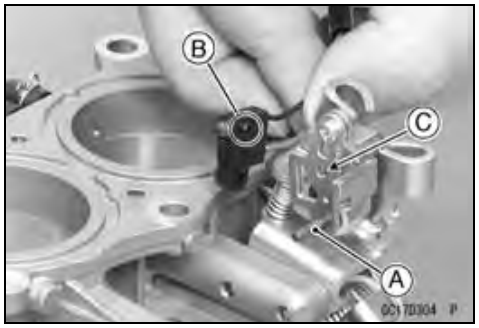

- Apply a non-permanent locking agent to the cruise control cancel switch (throttle) bolt [A].
- Install the switch so that the projection [B] into the hole [C] of the bracket.

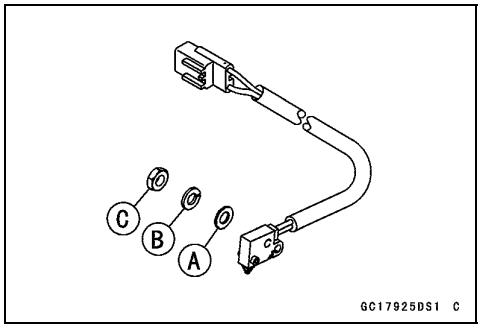

- Install:
  Plane Washer [A]
  Spring Washer [B]
  Cruise Control Cancel Switch (Throttle) Mounting Nut [C]
- Tighten:

Torque - Cruise Control Cancel Switch (Throttle) Mounting Nut: 0.28 N·m (0.03 kgf·m, 2.5 in·lb)

- Install the throttle body assy (see Throttle Body Assy Installation).

Downloaded from www.vulcanriders-sweden.org

Inlet Manifold

Inlet Manifold Removal



- Remove:
  Throttle Body Assy (see Throttle Body Assy Removal)
  Fuel Injectors (Fuel Injector Removal)
  Inlet Manifold Bolts [A]
  Inlet Manifold [B]

Inlet Mnifold Installation

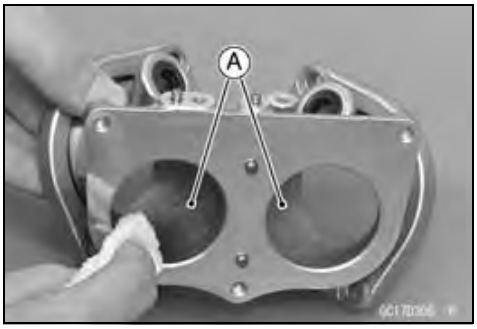

- Wipe any carbon off the bores [A] around the inlet manifold, using a piece of lint-free cloth penetrated with a high-flash point solvent.
- With a high-flash point solvent, clean off the flange surface of the cylinder head and wipe dry.

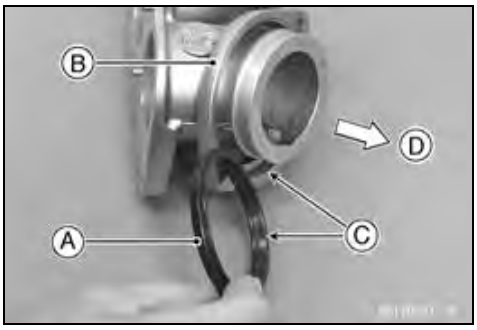

- Replace the flange seal [A] with a new one.
- Install the flange [B] and seal in the direction shown. Position the wide diameter [C] to outside [D].
- The seal should be centered on the flange.
- Apply a non-permanent locking agent to the inlet manifold bolts.
- Tighten:

Torque - Inlet Manifold Bolts: 9.8 N·m (1.0 kgf·m, 87 in·lb)

Downloaded from www.vulcanriders-sweden.org

Air Cleaner

Air Cleaner Element Removal/Installation

● Refer to the Air Cleaner Element Replacement in the Periodic Maintenance chapter.

Air Cleaner Element Inspection

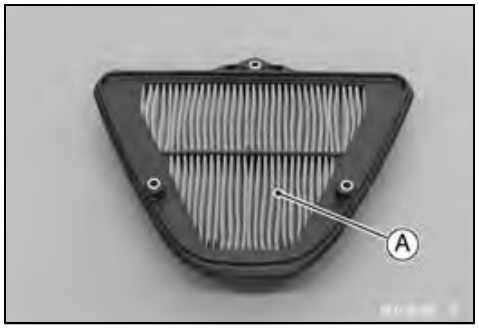

● Remove:
Air Cleaner Element (see Air Cleaner Element Replacement in the Periodic Maintenance chapter)
● Visually check the element [A] for tears or breaks.
★If the element has any tears or breaks, replace the element.

Air Cleaner Oil Draining

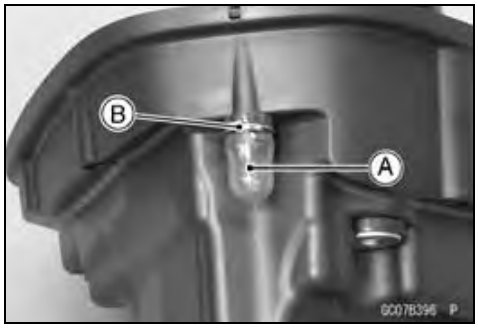

A drain tube is connected to the bottom of the air cleaner to drain water or oil accumulated in the air cleaner housing.
● Remove:
Left Air Cleaner Housing (see Left Air Cleaner Housing Removal)
● Visually check the drain tube [A] if the water or oil accumulates.
★If any water or oil accumulates in the tube, remove the tube from the housing and drain it.
● After draining, be sure to install the tube and clamp [B] firmly.

⚠ WARNING

Be sure to reinstall the tube after draining. Oil on tires will make them slippery and can cause an accident and injury.

Left Air Cleaner Housing Removal

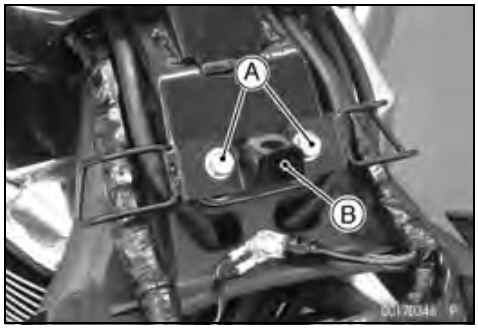

● Remove:
Front Seat (see Front Seat Removal in the Frame chapter)
Fuel Tank Mounting Bolts [A]
Bracket [B]
● Lift up the rear end of the fuel tank, using a suitable wood block.

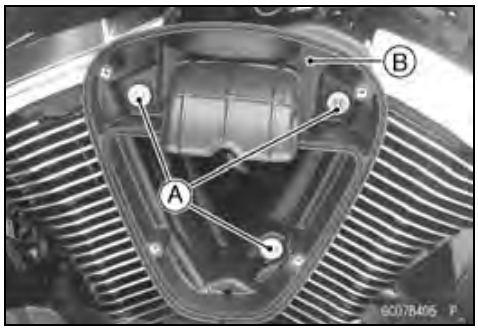

● Remove:
Air Cleaner Element (see Air Cleaner Element Replacement in the Periodic Maintenance chapter)
Air Cleaner Housing Bolts [A] and Washers
Left Air Cleaner Housing [B]

Downloaded from www.vulcanriders-sweden.org

Air Cleaner

● Remove:
Breather Hose [A]



Left Air Cleaner Housing Installation

● When installing the damper [A] and collar [B], install them as shown in the figure.
Air Cleaner Housing [C]
Engine Side [D]
Big Side [E]

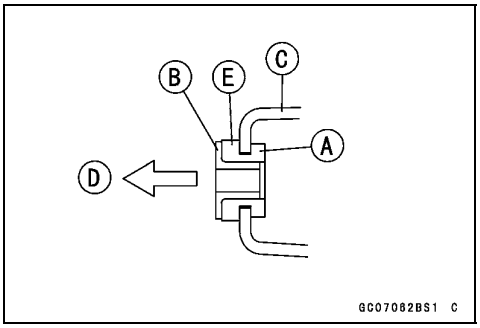

● Insert the breather hose [A] into the grommet [B] as shown in the figure.
○Reach the round portion [C] to the grommet.
Air Cleaner Housing [D]
Cylinder Head [E]

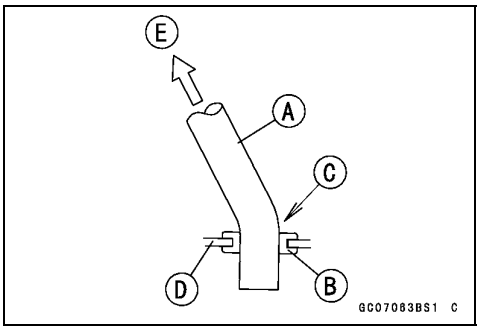

● Install:
Left Air Cleaner Housing
Air Cleaner Housing Bolts and Washers
● Tighten:

Torque - Air Cleaner Housing Bolts: 9.8 N·m (1.0 kgf·m, 87 in·lb)

● Install the removed parts.

Right Air Cleaner Housing Removal

● Remove:
Front Seat (see Front Seat Removal in the Frame chapter)
Fuel Tank Mounting Bolts [A]
Bracket [B]
● Lift up the rear end of the fuel tank, using a suitable wood block.

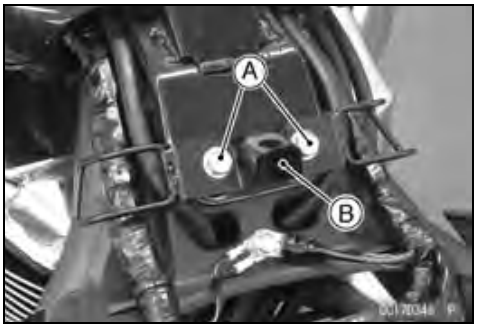

Downloaded from www.vulcanriders-sweden.org

Air Cleaner

● Remove:
Right Air Cleaner Housing Cover Bolts [A]
Right Air Cleaner Housing Cover [B]



● Remove:
Inlet Air temperature Sensor Connector [A]
Air Switching Valve Hose [B]

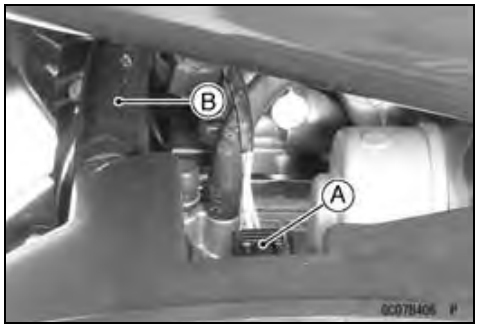

● Remove:
Air Cleaner Housing Bolts [A] and Washers
Right Air Cleaner Housing Center Bolts [B]
Right Air Cleaner Housing [C]

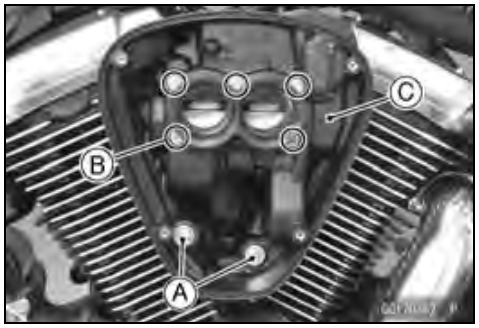

Right Air Cleaner Housing Installation

● When installing the damper [A] and collar [B], install them as shown in the figure.
Air Cleaner Housing [C]
Engine Side [D]
Big Side [E]

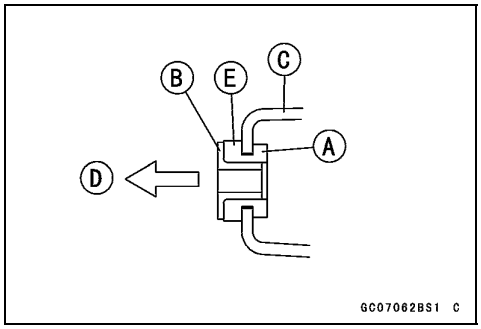

● With a high-flash point solvent, clean off the mating surfaces [A] and wipe dry.

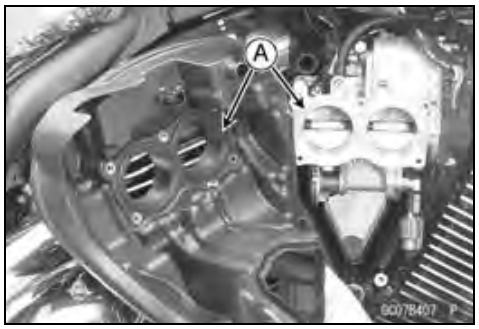

● Install:
Inlet Air temperature Sensor Connector
Air Switching Valve Hose

Downloaded from www.vulcanriders-sweden.org

Air Cleaner

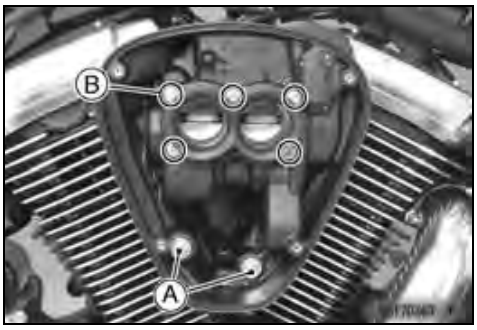

- Install:
  Right Air Cleaner Housing
  Air Cleaner Housing Bolts [A] and Washers
- Apply a non-permanent locking agent to the right air cleaner housing center bolts [B].
- Tighten:

Torque - Right Air Cleaner Housing Center Bolts: 9.8 N·m (1.0 kgf·m, 87 in·lb)
Air Cleaner Housing Bolts: 9.8 N·m (1.0 kgf·m, 87 in·lb)

- Install the right air clearner housing cover.
- Tighten:

Torque - Right Air Cleaner Housing Cover Bolts: 4.9 N·m (0.50 kgf·m, 43 in·lb)

- Install the removed parts.

Downloaded from www.vulcanriders-sweden.org

Fuel Tank

Fuel Tank Removal

⚠ WARNING

Gasoline is extremely flammable and can be explosive under certain conditions. Make sure the area is well-ventilated and free from any source of flame or sparks; this includes any appliance with a pilot light. Do not smoke. Turn the ignition switch OFF and disconnect the battery (–) terminal.
To avoid fire, do not remove the fuel tank when the engine is still hot. Wait until it cools down.
To make fuel spillage minimum, draw the fuel out from the fuel tank when the engine is cold.
Be prepared for fuel spillage; any spilled fuel must be completely wiped up immediately.

- Turn the ignition switch OFF.
- Wait until the engine cools down.
- Disconnect the battery (–) terminal (see Battery Removal in the Electrical System chapter).
- Open the fuel tank cap [A] to lower the pressure in the tank.



- Draw the fuel out from the fuel tank with a commercially available pump [A].

○Use a soft plastic hose [B] as a pump inlet hose in order to insert the hose smoothly.

○Put the hose through the filler opening [C] into the tank and draw the fuel out.

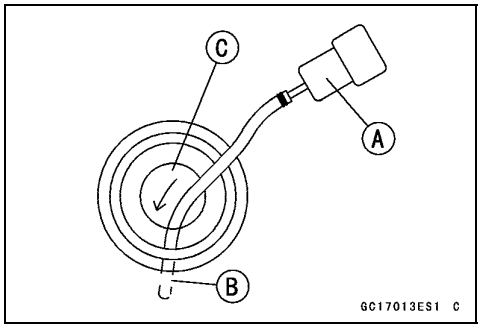

⚠ WARNING

The fuel could not be removed completely from the fuel tank. Be careful for remained fuel spillage.

- Remove the meter cover together with the meter unit (see Meter Unit Removal in the Electrical System chapter).

- Remove:
  Fuel Tank Bolts [A]
  Bracket [B]

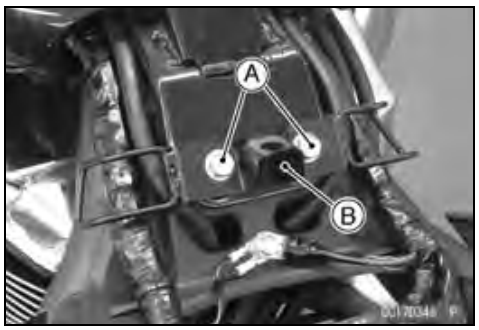

Downloaded from www.vulcanriders-sweden.org

Fuel Tank

● Disconnect:
Fuel Pump Lead Connector [A]

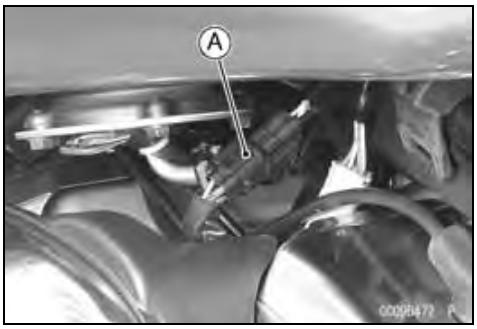

● Be sure to place a piece of cloth [A] around the fuel hose joint.
● Insert a thin blade screwdriver [B] into the slit [C] on the joint lock [D].

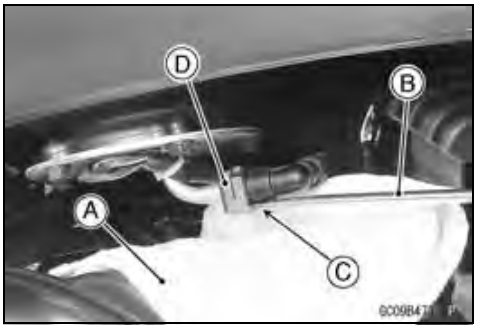

● Turn [A] the driver to disconnect the joint lock [B].
● Pull the fuel hose joint [C] out of the outlet pipe.

⚠ WARNING

Be prepared for fuel spillage; any spilled fuel must be completely wiped up immediately.
When the fuel hose is disconnected, fuel spills out from the hose and the pipe. Cover the hose connection with a clean shop towel to prevent fuel spillage.

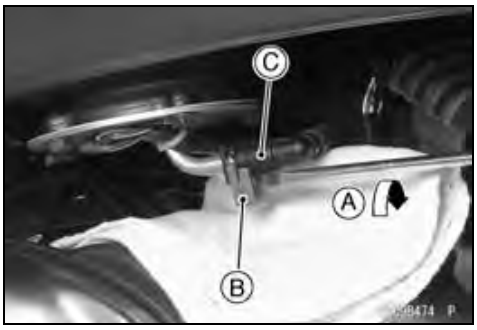

● Remove:
Breather Hose [A]



● For the CAL and SEA models, remove the following.
Fuel Return Hose [A] (right side, red)

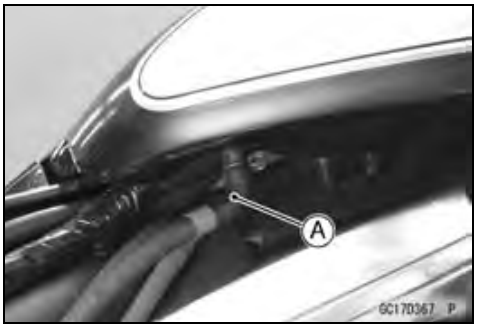

● Remove the fuel tank, and place it on a flat surface.
○Do not apply the load to the fuel outlet pipe of the fuel pump.

Downloaded from www.vulcanriders-sweden.org

Fuel Tank

● For the CAL and SEA models, note the following.

CAUTION

For the California and Southeast Asia models, if gasoline, solvent, water or any other liquid enters the canister, the canister's vapor absorbing capacity is greatly reduced. If the canister does become contaminated, replace it with a new one.

○Be sure to plug the evaporative fuel return hose to prevent fuel spilling before fuel tank removal.

○Be careful of fuel spillage from the fuel tank, if the fuel still remains in the fuel tank and fuel pump.

⚠ WARNING

For the California and Southeast Asia models, be careful not to spill the gasoline through the return hose. Spilled fuel is hazardous.

★If liquid or gasoline flows into the breather hose, remove the hose and blow it clean with compressed air.

⚠ WARNING

Store the fuel tank in an area which is well -ventilated and free from any source of flame or sparks. Do not smoke in this area. Place the fuel tank on a flat surface and plug the fuel pipes to prevent fuel leakage.

Fuel Tank Installation

● Note the above WARNING (see Fuel Tank Removal).

● Run the hoses correctly (see Cable, Wire, and Hose Routing section in the Appendix chapter).

● Check that the dampers [A] are in place on the fuel tank.

★If the dampers are damaged or deteriorated, replace them.

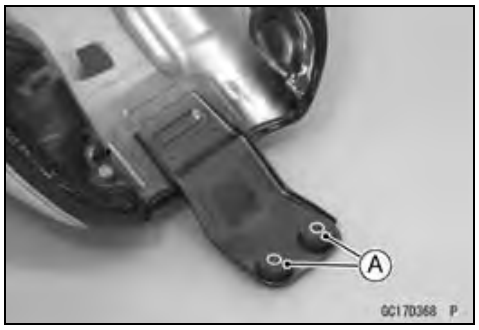

● When installing the damper [A], position the thick side [B] to frame side [C].

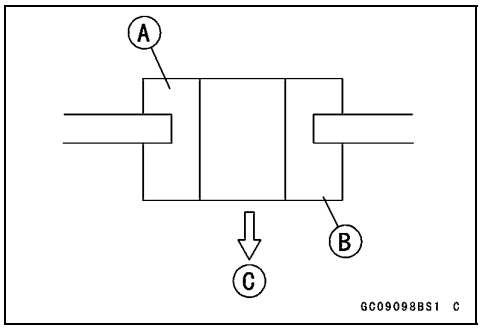

Downloaded from www.vulcanriders-sweden.org

Fuel Tank

● Check that the dampers [A] are in place on the frame.
★If the dampers are damaged or deteriorated, replace them.



● Install the fuel pump so that the stoppers [A] fit to the dampers [B].



● For the CAL and SEA models, note the following.
○To prevent the gasoline from flowing into or out of the canister, hold the separator perpendicular to the ground.
○Connect the hoses according to the diagram of the evaporative emission control system. Make sure they do not get pinched or kinked.
○Run the hoses with a minimum of bending so that the air or vapor will not be obstructed.

● Install [A] the fuel hose joint [B] straight onto the fuel outlet pipe until the hose joint clicks.
● Push [C] the joint lock [D] until the hose joint clicks.

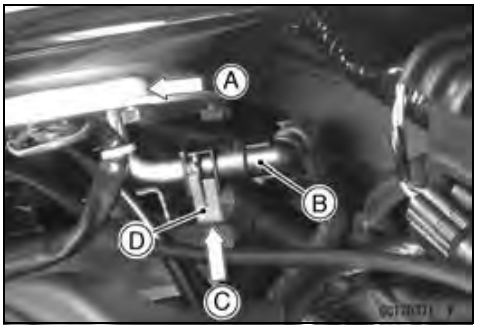

● Push and pull [A] the fuel hose joint [B] back and forth more than two times, and make sure it is locked and does not come off.

⚠ WARNING

Make sure the hose joint is installed correctly on the delivery pipe or the fuel could leak.

★If it comes off, reinstall the hose joint.
● Connect the fuel pump lead connector and the battery (–) terminal (see Battery Installation in the Electrical System chapter).

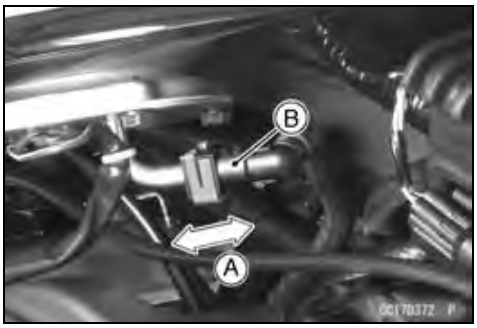

Downloaded from www.vulcanriders-sweden.org

Fuel Tank

Fuel Tank Inspection

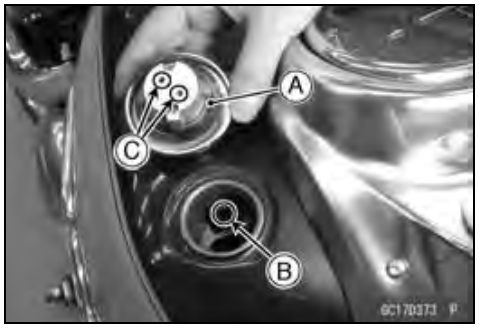

- Visually inspect the gasket [A] on the tank cap for any damage.

★Replace the gasket if it is damaged.

- Check to see if the fuel breather pipe [B] in the tank are not clogged. Check the tank cap breather also.

★If they are clogged, remove the tank and drain it, and then blow the breather free with compressed air.

CAUTION

Do not apply compressed air to the air vent holes [C] in the tank cap. This could cause damage and clogging of the labyrinth in the cap.

Fuel Tank Cleaning

⚠ WARNING

Clean the tank in a well-ventilated area, and take care that there are no sparks or flame anywhere near the working area. Because of the danger or highly flammable liquids, do not use gasoline or low-flash point solvents to clean the tank.

- Remove:
  Fuel Tank (see Fuel Tank Removal)
  Fuel Pump (see Fuel Pump Removal)
- Pour some high-flash point solvent into the fuel tank and shake the tank to remove dirt and fuel deposits.
- Draw the solvent out of the fuel tank.
- Dry the tank with compressed air.
- Install:
  Fuel Pump (see Fuel Pump Installation)
  Fuel Tank (see Fuel Tank Installation)

Downloaded from www.vulcanriders-sweden.org

Evaporative Emission Control System (CAL and SEA Models)

The Evaporative Emission Control System routes fuel vapors from the fuel system into the running engine or stores the vapors in a canister when the engine is stopped. Although no adjustments are required, a thorough visual inspection must be made at the intervals specified by the Periodic Maintenance Chart.

Parts Removal/Installation

⚠ WARNING

Gasoline is extremely flammable and can be explosive under certain conditions. Make sure the area is well-ventilated and free from any source of flame or sparks; this includes any appliance with a pilot light. Do not smoke. Turn the ignition switch OFF.

CAUTION

If gasoline, solvent, water or any other liquid enters the canister, the canister's vapor absorbing capacity is greatly reduced. If the canister does become contaminated, replace it with a new one.

- To prevent the gasoline from flowing into or out of the canister, hold the separator perpendicular to the ground.
- Connect the hoses according to the diagram of the system (see Cable, Wire, and Hose Routing section in the Appendix chapter). Make sure they do not get pinched or kinked.

Hose Inspection

- Refer to the Evaporative Emission Control System Inspection (CAL and SEA Models) in the Periodic Maintenance chapter.

Separator Inspection

- Refer to the Evaporative Emission Control System Inspection (CAL and SEA Models) in the Periodic Maintenance chapter.

Downloaded from www.vulcanriders-sweden.org

Evaporative Emission Control System (CAL and SEA Models)

Separator Operation Test

⚠ WARNING

Gasoline is extremely flammable and can be explosive under certain conditions. Do not smoke. Turn the ignition switch OFF. Make sure the area is well-ventilated and free from any source of flame or sparks; this includes any appliance with a pilot light.

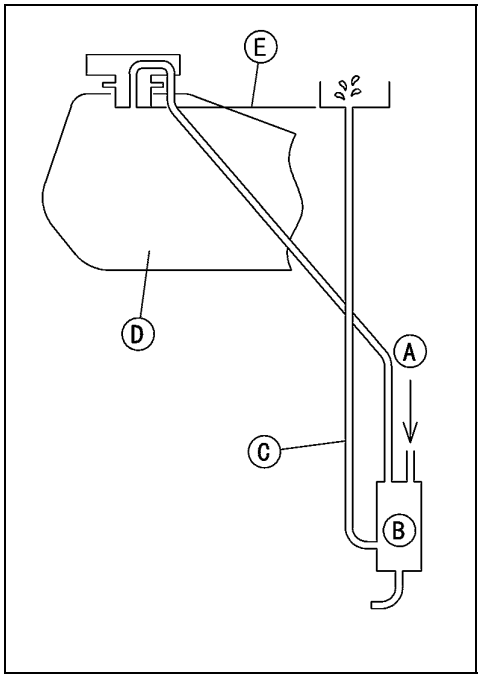

- Connect the hoses to the separator, and install the separator on the motorcycle.
- Disconnect the breather hose from the separator, and inject about 20 mL (0.68 US oz.) of gasoline [A] into the separator [B] through the hose fitting.
- Disconnect the fuel return hose [C] from the fuel tank [D].
- Run the open end of the return hose into the container and hold it level with the tank top [E].
- Start the engine, and let it idle.

★If the gasoline in the separator comes out of the hose, the separator works well. If it does not, replace the separator with a new one.

Canister Inspection

- Refer to the Evaporative Emission Control System Inspection (CAL and SEA Models) in the Periodic Maintenance chapter.

Downloaded from www.vulcanriders-sweden.org

Evaporative Emission Control System (CAL and SEA Models)

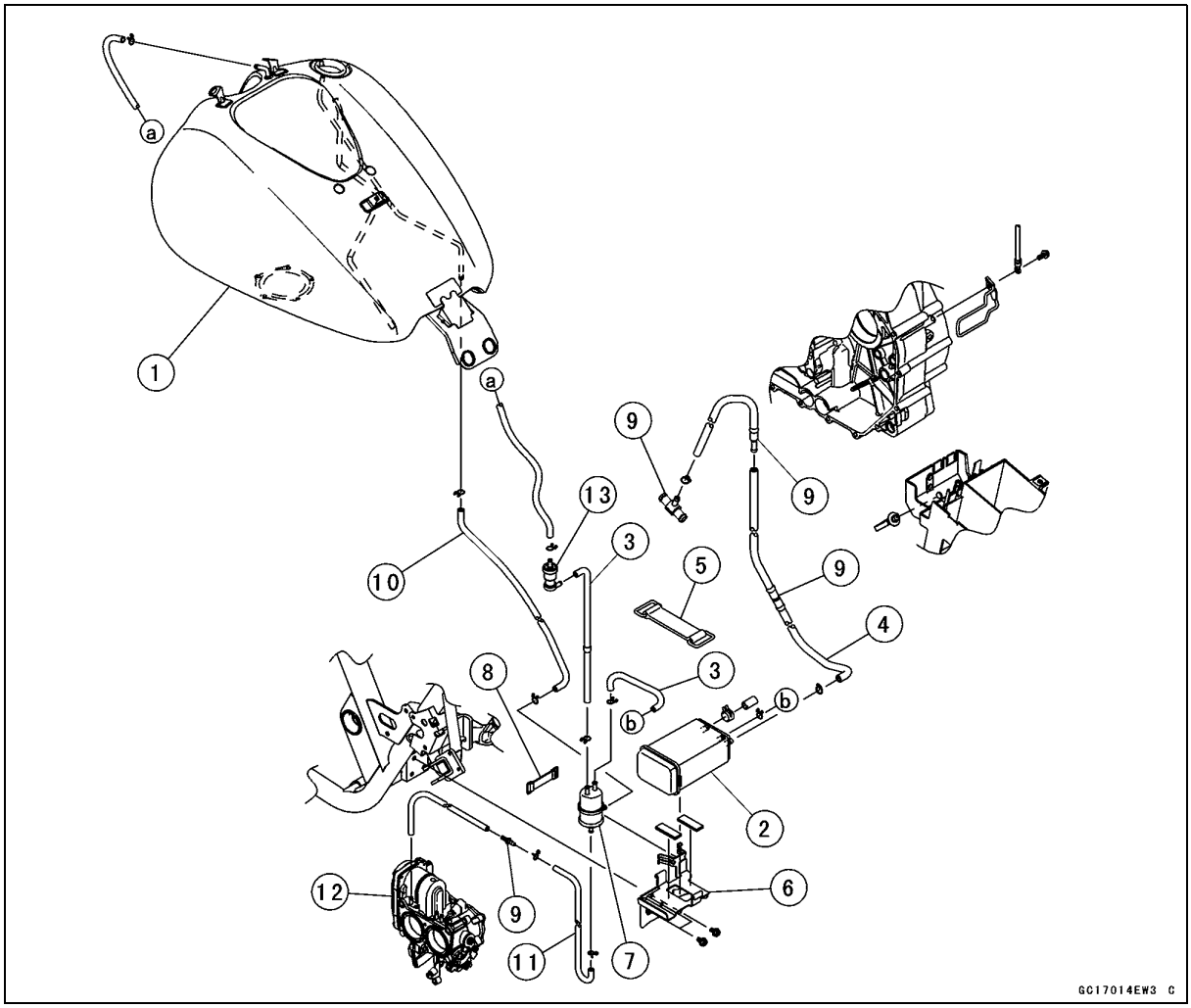

1. Fuel Tank
2. Canister
3. Blue Hose (Breather)
4. Green Hose (Purge)
5. Band (for Canister)
6. Bracket (for Canister)
7. Separator
8. Band (for Separator)
9. Fittings
10. Red Hose (Return)
11. White Hose (Vacuum)
12. Throttle Body Assy
13. Check Valve

Downloaded from www.vulcanriders-sweden.org

Cooling System

Table of Contents

Exploded View 4-2
Coolant Flow Chart 4-4
Specifications 4-6
Special Tools 4-7
Coolant 4-8
- Coolant Deterioration Inspection 4-8
- Coolant Level Inspection 4-8
- Coolant Draining 4-8
- Coolant Filling 4-8
- Pressure Testing 4-8
- Cooling System Flushing 4-9
- Coolant Reserve Tank Removal/Installation 4-9

Water Pump 4-10
- Water Pump Removal 4-10
- Water Pump Installation 4-10
- Water Pump Inspection 4-10
- Water Pump Impeller Disassembly/Assembly 4-10
- Water Pump Impeller Inspection 4-10
- Mechanical Seal Inspection 4-11
- Mechanical Seal Replacement 4-11

Radiator 4-13
- Radiator Removal 4-13
- Radiator Installation 4-14
- Radiator Inspection 4-15
- Radiator Cap Inspection 4-15
- Radiator Filler Neck Inspection 4-16

Thermostat 4-17
- Thermostat Removal 4-17
- Thermostat Installation 4-17
- Thermostat Inspection 4-18

Hoses and Pipes 4-19
- Water Separator Cover Removal 4-19
- Water Separator Cover Installation 4-19
- Hose Installation 4-20
- Hose Inspection 4-20

Water Temperature Sensor 4-21
- Water Temperature Sensor Removal/Installation 4-21
- Water Temperature Sensor Inspection 4-21

Downloaded from www.vulcanriders-sweden.org

Exploded View

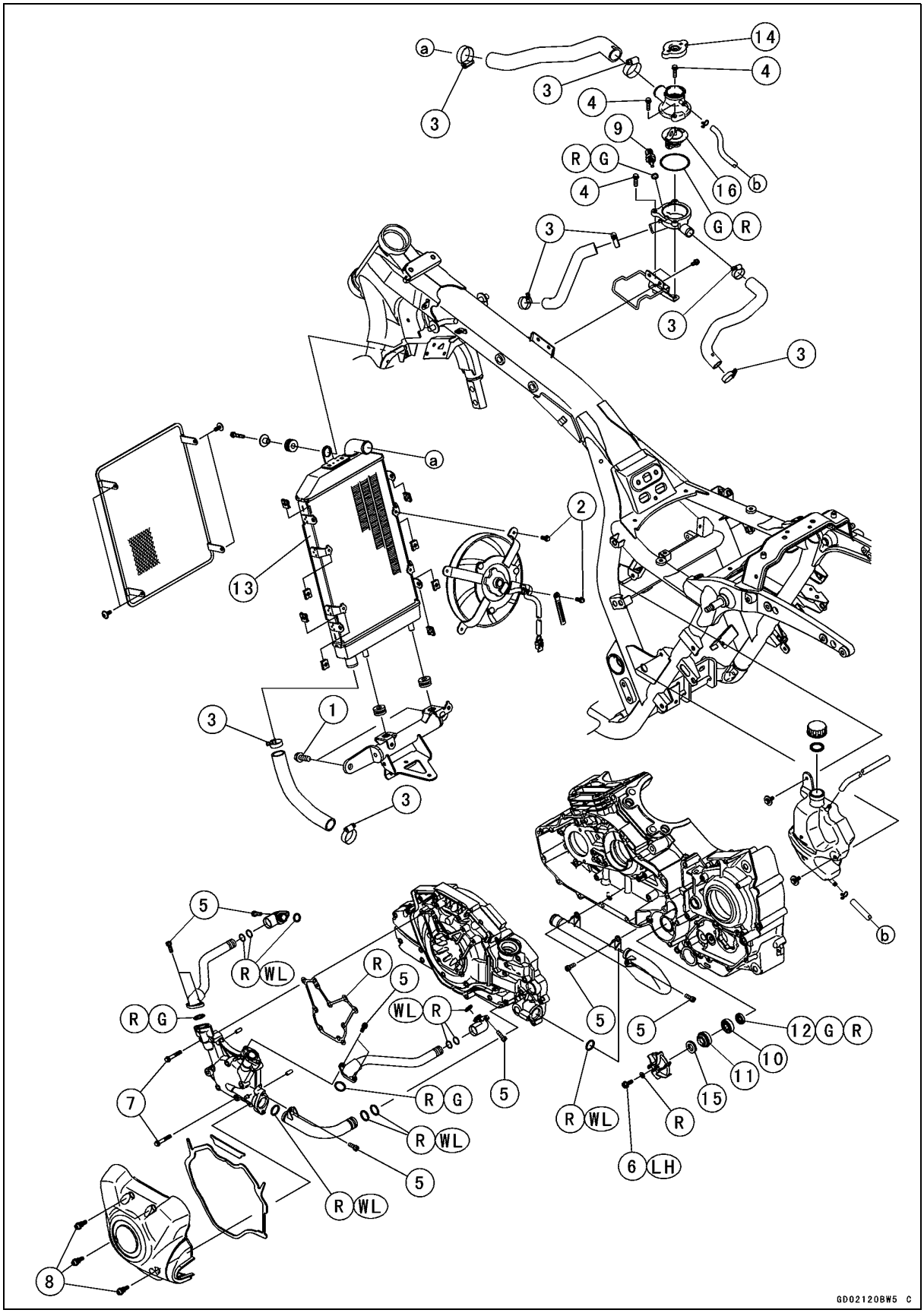

Downloaded from www.vulcanriders-sweden.org

Exploded View

No.	Fastener	Torque			Remarks
		N·m	kgf·m	ft·lb	
1	Cross Pipe Bolts	34	3.5	25	
2	Radiator Fan Bolts	8.3	0.85	73 in·lb	
3	Radiator Hose Clamp Screws	2.0	0.20	18 in·lb	
4	Thermostat Housing Cover Bolts	9.8	1.0	87 in·lb	
5	Water Pipe Bolts	12	1.2	106 in·lb	
6	Water Pump Impeller Bolt	12	1.2	106 in·lb	Lh
7	Water Separator Inner Cover Bolts	12	1.2	106 in·lb	
8	Water Separator Outer Cover Bolts	12	1.2	106 in·lb	
9	Water Temperature Sensor	12	1.2	106 in·lb	

10. Double Seal Bearing
11. Mechanical Seal
12. Oil Seal
13. Radiator
14. Radiator Cap
15. Sealing Seat
16. Thermostat

G: Apply grease.
LH: Left-hand threads
R: Replacement Parts
WL: Apply soap and water solution.

Downloaded from www.vulcanriders-sweden.org

Coolant Flow Chart

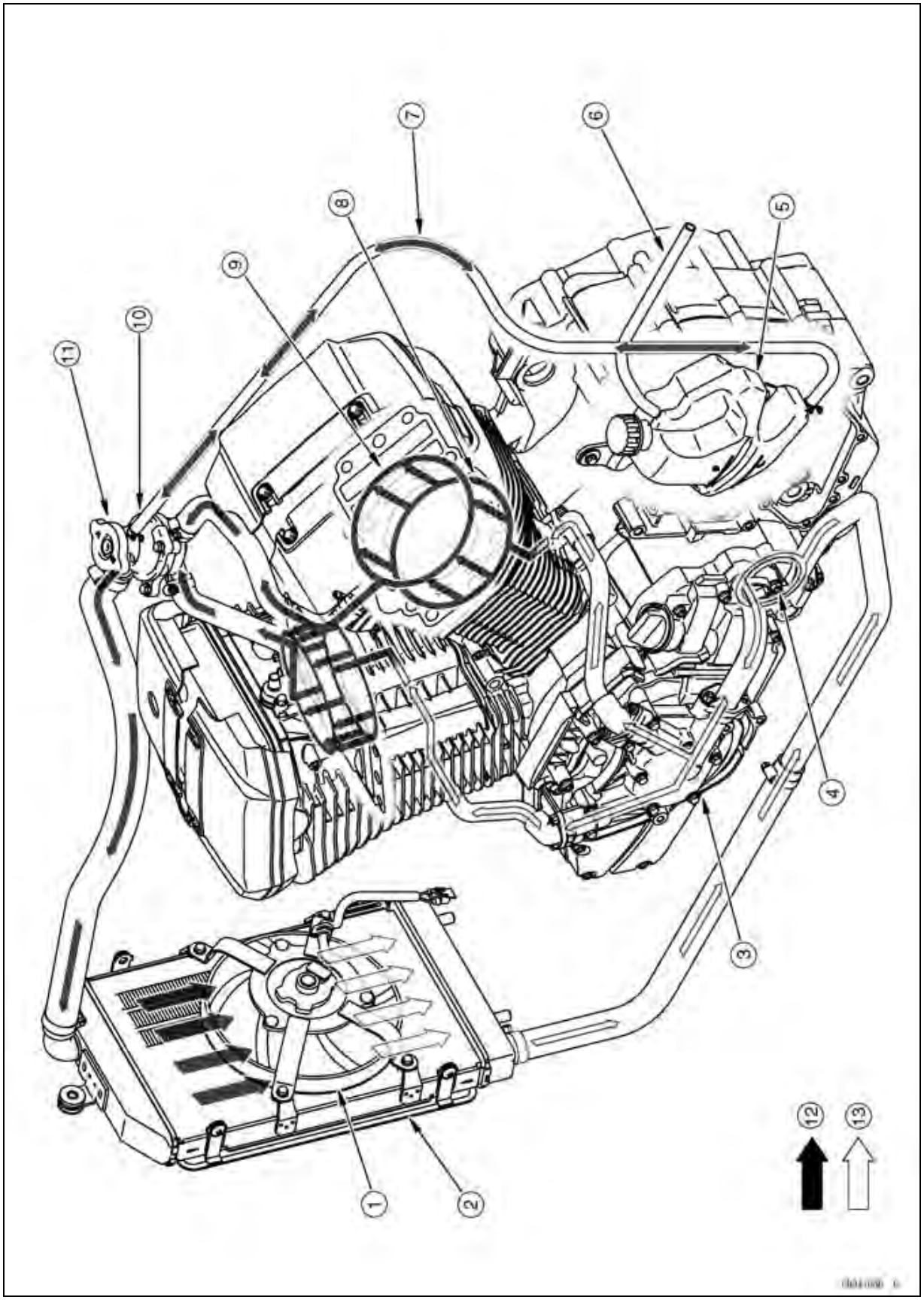

Downloaded from www.vulcanriders-sweden.org

Coolant Flow Chart

1. Radiator Fan
2. Radiator
3. Water Separator Cover
4. Water Pump
5. Reserve Tank
6. Reserve Tank Overflow Hose
7. Radiator Overflow Hose
8. Cylinder Jacket
9. Cylinder Head Jacket
10. Thermostat Housing
11. Radiator Cap
12. Hot Coolant Flow
13. Cold Coolant Flow

Permanent type antifreeze is used as a coolant to protect the cooling system from rust and corrosion. When the engine starts, the water pump turns and the coolant circulates.

The thermostat is a wax pellet type which opens or closes as coolant temperature changes. The thermostat continuously changes its valve opening to keep the coolant temperature at the proper level. When coolant temperature is below 58 ~ 62°C (136 ~ 144°F), the thermostat closes so that the coolant flow is restricted through the air bleeder hole, causing the engine to warm up more quickly. When coolant temperature is more than 58 ~ 62°C (136 ~ 144°F), the thermostat opens and the coolant flows.

When the coolant temperature goes up beyond 95°C (203°F), the radiator fan relay conducts to operate the radiator fan. The radiator fan draws air through the radiator core when there is not sufficient air flow such as at low speeds. This increases up the cooling action of the radiator. When the temperature is below 90°C (194°F), the fan relay opens and the radiator fan stops.

In this way, this system controls the engine temperature within narrow limits where the engine operates most efficiently even if the engine load varies.

The system is pressurized by the radiator cap to suppress boiling and the resultant air bubbles which can cause engine overheating. As the engine warms up, the coolant in the radiator and the water jacket expands. The excess coolant flows through the radiator cap and hose to the reserve tank to be stored there temporarily. Conversely, as the engine cools down, the coolant in the radiator and the water jacket contracts, and the stored coolant flows back to the radiator from the reserve tank.

The radiator cap has two valves. One is a pressure valve which holds the pressure in the system when the engine is running. When the pressure exceeds 93 ~ 123 kPa (0.95 ~ 1.25 kgf/cm², 13 ~ 18 psi), the pressure valve opens and releases the pressure to the reserve tank. As soon as pressure escapes, the valve closes, and keeps the pressure at 93 ~ 123 kPa (0.95 ~ 1.25 kgf/cm², 13 ~ 18 psi). When the engine cools down, another small valve (vacuum valve) in the cap opens. As the coolant cools, the coolant contracts to from a vacuum in the system. The vacuum valve opens and allows the coolant from the reserve tank to enter the radiator.

Downloaded from www.vulcanriders-sweden.org

4-6 COOLING SYSTEM

Specifications

Item	Standard
Coolant provided when shipping	
Type (Recommended)	Permanent type antifreeze (soft water and ethylene glycol plus corrosion and rust inhibitor chemicals for aluminum engines and radiators)
Color	Green
Mixed Ratio	Soft water 50%, coolant 50%
Freezing Point	−35°C (−31°F)
Total Amount	2.4 L (2.5 US qt) (Reserve tank full level, including radiator and engine)
Radiator Cap	
Relief Pressure	93 ~ 123 kPa (0.95 ~ 1.25 kgf/cm², 13.5 ~ 17.8 psi)
Thermostat	
Valve Opening Temperature	58 ~ 62°C (136 ~ 144°F)
Valve Full Opening Lift	8 mm (0.31 in.) or more at 75°C (167°F)

Downloaded from www.vulcanriders-sweden.org

Special Tools

Bearing Driver Set:
57001-1129

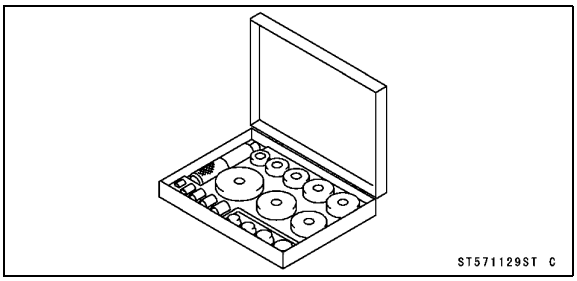

Bearing Remover Head, ϕ10 × ϕ12:
57001-1266

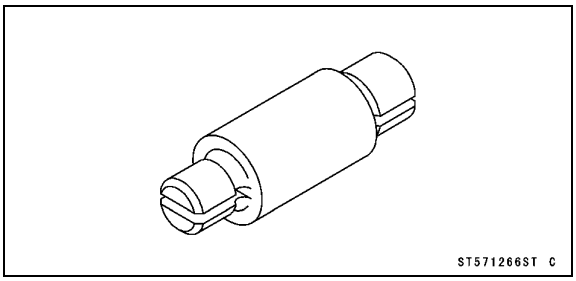

Bearing Remover Shaft, ϕ9:
57001-1265

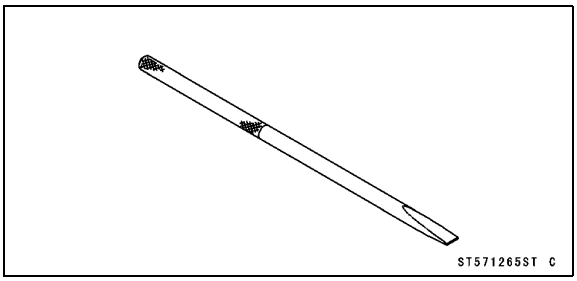

Downloaded from www.vulcanriders-sweden.org

Coolant

Coolant Deterioration Inspection



- Remove the left side cover (see Left Side Cover Removal in the Frame chapter).
- Visually inspect the coolant [A] in the reserve tank.

★If whitish cotton-like wafts are observed, aluminum parts in the cooling system are corroded. If the coolant is brown, iron or steel parts are rusting. In either case, flash the cooling system.

★If the coolant gives off an abnormal smell, check for a cooling system leak. It may be caused by exhaust gas leaking into the cooling system.

Coolant Level Inspection

- Refer to the Coolant Level Inspection in the Periodic Maintenance chapter.

Coolant Draining

- Refer to the Coolant Change in the Periodic Maintenance chapter .

Coolant Filling

- Refer to the Coolant Change in the Periodic Maintenance chapter.

Pressure Testing

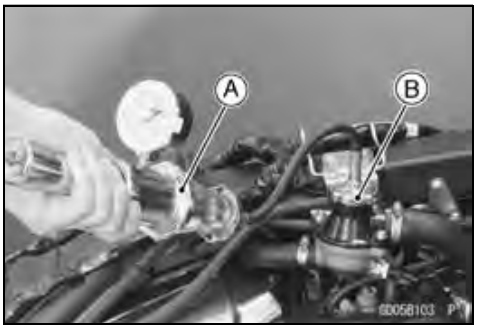

- Remove the fuel tank (see Fuel Tank Removal in the Fuel System (DFI) chapter).
- Remove the radiator cap, and install a cooling system pressure tester [A] on the radiator filler neck [B].

○Remove the radiator cap in two steps. First turn the cap counterclockwise to the first stop. Then push and turn it further in the same direction and remove the cap.

NOTE

○*Wet the cap sealing surfaces with water or coolant to prevent pressure leakage.*

- Build up pressure in the system carefully until the pressure reaches 123 kPa (1.25 kgf/cm², 17.8 psi).

CAUTION

During pressure testing, do not exceed the pressure for which the system is designed. The maximum pressure is 123 kPa (1.25 kgf/cm², 17.8 psi).

- Watch the gauge for at least 6 seconds.

★If the pressure holds steady, the system is all right.

★If the pressure drops and no external source is found, check for internal leakage. Droplets in the engine oil indicate internal leakage. Check the cylinder head and cylinder gaskets and the water pump.

- Remove the pressure tester, replenish the coolant, and install the radiator cap.

Downloaded from www.vulcanriders-sweden.org

Coolant

Cooling System Flushing

Over a period of time, the cooling system accumulates rust, scale, and lime in the water jacket and radiator. When this accumulation is suspected or observed, flush the cooling system. If this accumulation is not removed, it will clog up the water passage and considerably reduce the efficiency of the cooling system.

- Drain the cooling system (see Coolant Change in the Periodic Maintenance chapter).
- Fill the cooling system with fresh water mixed with a flushing compound.

CAUTION
Do not use a flushing compound which is harmful to the aluminum engine and radiator. Carefully follow the instructions supplied by the manufacturer of the cleaning product.

- Warm up the engine, and run it at normal operating temperature for about ten minutes.
- Stop the engine, and drain the cooling system.
- Fill the system with fresh water.
- Warm up the engine and drain the system.
- Repeat the previous two steps once more.
- Fill the system with a permanent type coolant and bleed the air from the system (see Coolant Change in the Periodic Maintenance chapter).

Coolant Reserve Tank Removal/Installation

- The coolant reserve tank is removed and installed during coolant change (see Coolant Change in the Periodic Maintenance chapter).

Downloaded from www.vulcanriders-sweden.org

Water Pump

Water Pump Removal

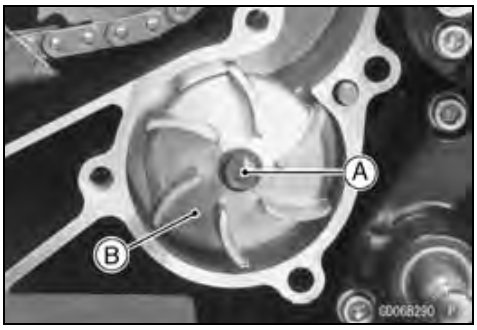

- Drain the coolant (see Coolant Change in the Periodic Maintenance chapter).
- Remove:
  Alternator Cover (see Alternator Cover Removal in the Electrical System chapter)
  Impeller Bolt [A] and Washer
  Impeller [B]

NOTE

○*The impeller bolt has left-hand threads. Turn the bolt clockwise and remove it.*

Water Pump Installation

- Replace the washer with a new one.
- Tighten the water pump impeller bolt together with a new washer by turning the bolt counterclockwise.
- Tighten:

Torque - Water Pump Impeller Bolt: 12 N·m (1.2 kgf·m, 106 in·lb)

Water Pump Inspection



- Check the drainage outlet passage [A] at the bottom of the crankcase for coolant leaks.

★If the mechanical seal is damaged, the coolant leaks through the seal and drains through the passage. Replace the mechanical seal unit.

Water Pump Impeller Disassembly/Assembly

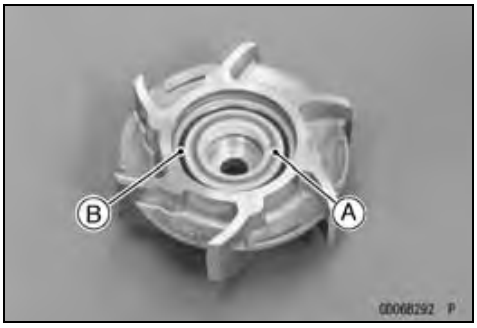

- Remove the water pump impeller (see Water Pump Removal).
- The sealing seat [A] and rubber seal [B] may be removed easily by hand.
- Apply coolant around the surfaces of the rubber seal and sealing seat.
- Install the rubber seal and sealing seat into the impeller by pressing them by hand until the seat stops at the bottom of the hole.
- Install the water pump impeller (see Water Pump Installation).

Water Pump Impeller Inspection

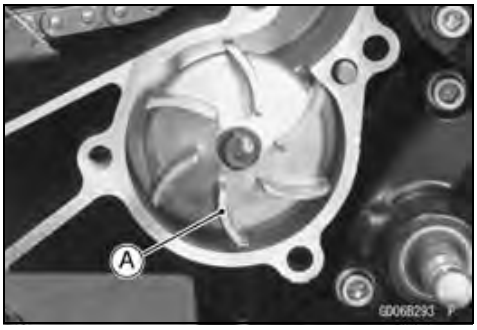

- Remove the alternator cover (see Alternator Cover Removal in the Electrical System chapter).
- Visually inspect the water pump impeller [A].

★If the surface is corroded or if the blades are damaged, replace the impeller.

Downloaded from www.vulcanriders-sweden.org

Water Pump

Mechanical Seal Inspection

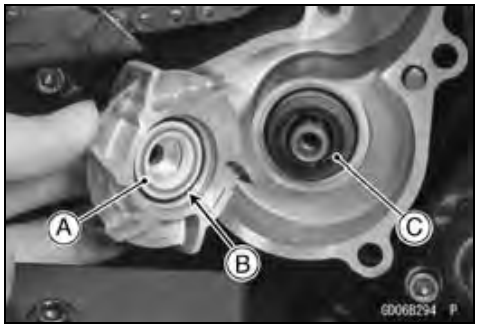

- Remove the impeller (see Water Pump Removal).
- Visually inspect the mechanical seal.

★If any one of the parts is damaged, replace the mechanical seal as a unit.

○The sealing seat and rubber seal may be removed easily by hand.

Impeller Sealing Seat Surface [A]
Rubber Seal [B]
Mechanical Seal Diaphragm [C]

Mechanical Seal Replacement



- Remove the water pump impeller (see Water Pump Removal).
- Pry the mechanical seal flange off with a small chisel [A].
- Pull the mechanical seal out of the right crankcase with needle nose pliers. Discard the mechanical seal.

CAUTION

Be careful not to damage the water pump shaft and the inner sealing surface of the crankcase.

- Replace the mechanical seal with a new one.

NOTE

○*Since the replacement mechanical seal has an adhesive coated body, do not apply a liquid gasket to the exterior surface of the body.*

- Press [A] the mechanical seal [B] by using a suitable 28 mm socket [C] and a bearing driver [D] until its flange touches the step [E].

Special Tool - Bearing Driver Set: 57001-1129

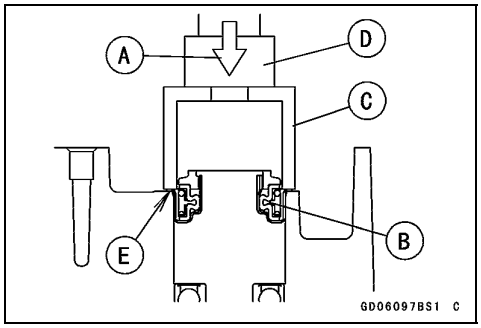

★If the seal and ball bearing are damaged, replace the mechanical seal, ball bearing, and oil seal by splitting the crankcase.

- Split the crankcase (see Crankcase Splitting in the Crankshaft/Transmission chapter).
- Remove the mechanical seal.
- Take the bearing [A] out of the left crankcase, using the bearing remover.

Special Tools - Bearing Remover Shaft, ϕ9 [B]: 57001-1265
Bearing Remover Head, ϕ10 × ϕ12 [C]: 57001-1266

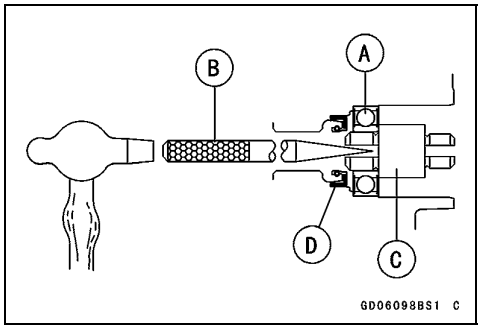

- Using a thin-bladed screwdriver, pry out the oil seal [D].

Downloaded from www.vulcanriders-sweden.org

Water Pump

- Replace the oil seal and ball bearing with new ones.
- Apply grease to the oil seal lips.
- Press the oil seal [A] into the hole from the outside of the left crankcase with the bearing driver set so that the spring side of the seal lips is toward the inside of the crankcase.

  Special Tool - Bearing Driver Set: 57001-1129
- Press the oil seal in until oil seal surface [B] is 0.5 ~ 1.5 mm (0.020 ~ 0.059 in.) [C] from the step [D] of the hole.

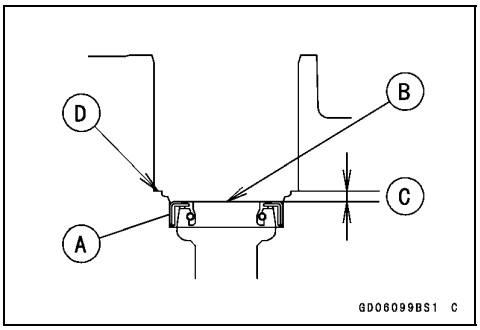

- Press the ball bearing [A] into the hole from the outside of the left crankcase with the bearing driver set [B].
- Press the ball bearing in until it stops at the bottom surface [C] of the crankcase.

  Special Tool - Bearing Driver Set: 57001-1129
- Install the new mechanical seal.

CAUTION
Do not reuse the mechanical seal.

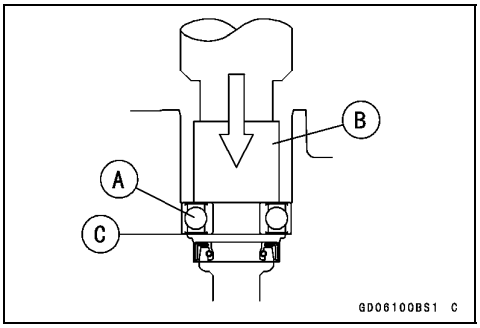

Downloaded from www.vulcanriders-sweden.org

Radiator

Radiator Removal

- Remove:
  Bracket Bolt [A]
  Cross Pipe Bolts [B]
- Detach the projections of the radiator from the grommet [C] of the cross pipe.

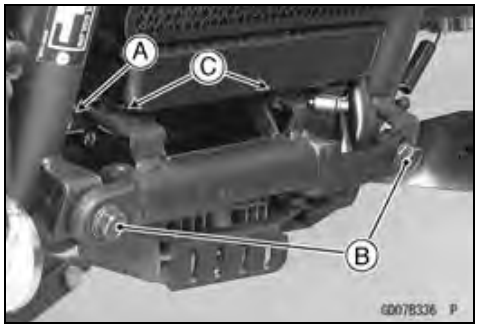

- Open the clamp [A] to free the lead.
- Disconnect the regulator connectors [B].
- Remove the cross pipe [C] together with the regulators.
- Drain the coolant (see Coolant Change in the Periodic Maintenance chapter).

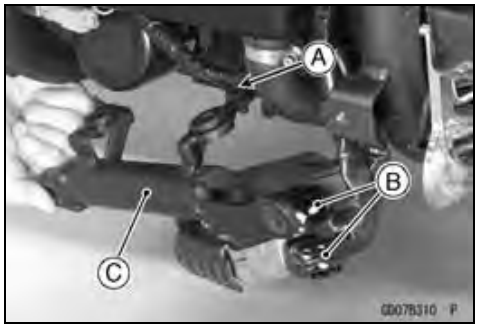

- Disconnect the radiator fan connector [A].



- Remove the radiator hose [A].



- Remove:
  Bolt [A]
  Horn [B]



Downloaded from www.vulcanriders-sweden.org

Radiator

● Remove:
Radiator Bolt [A]
Radiator [B]

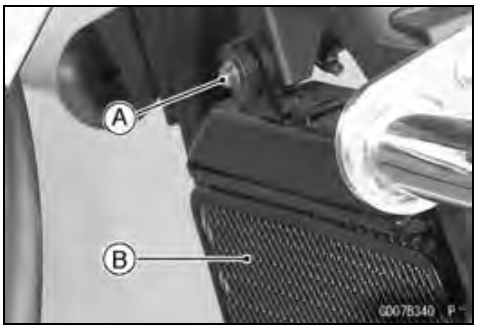

CAUTION

Do not touch the radiator core. This could damage the radiator fins, resulting in loss of cooling efficiency.

● Remove:
Radiator Fan Bolts [A]
Radiator Fan [B]



Radiator Installation

● Installation is the reverse of removal, note the following.
○Run the radiator fan lead [A] as shown in the figure.
Radiator Screen Bracket [B]
Good Route [C]

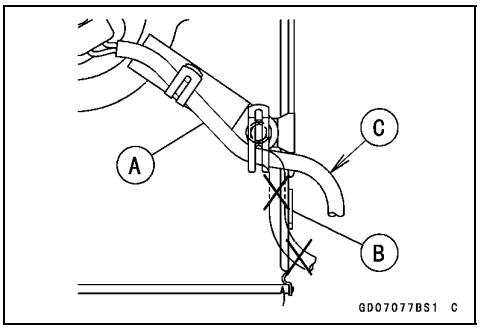

● Tighten:

Torque - Radiator Fan Bolts: 8.3 N·m (0.85 kgf·m, 73 in·lb)

○Insert the projection [A] of the radiator into the grommet [B] of the cross pipe.

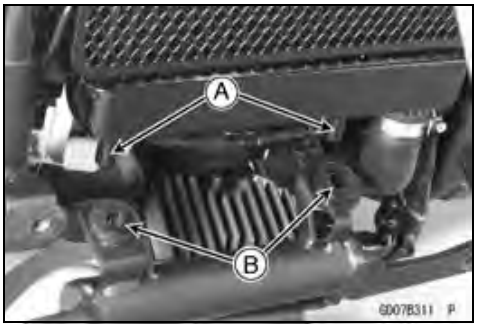

○Install the bracket on the cross pipe so that the hook portion [A] touches the tab [B].

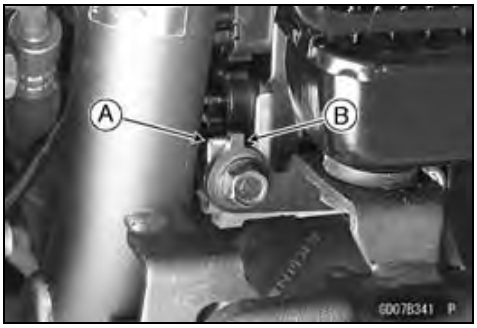

● Tighten:

Torque - Cross Pipe Bolts: 34 N·m (3.5 kgf·m, 25 ft·lb)

● Install the removed parts (see appropriate chapters).

Downloaded from www.vulcanriders-sweden.org

Radiator

Radiator Inspection

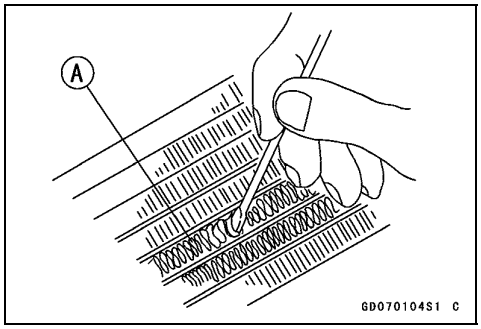

- Remove the radiator (see Radiator Removal).
- Check the radiator core.

★If there are obstructions to air flow, remove them.

★If the corrugated fins [A] are deformed, carefully straighten them.

★If the air passages of the radiator core are blocked more than **20%** by unremovable obstructions or irreparably deformed fins, replace the radiator with a new one.

CAUTION

When cleaning the radiator with steam cleaner, be careful of the following to prevent radiator damage.
1.Keep the steam gun [A] away more than 0.5 m (1.6 ft) [B] from the radiator core.
2.Hold the steam gun perpendicular [C] (not oblique [D]) to the core surface and run the steam gun following the core fin direction.

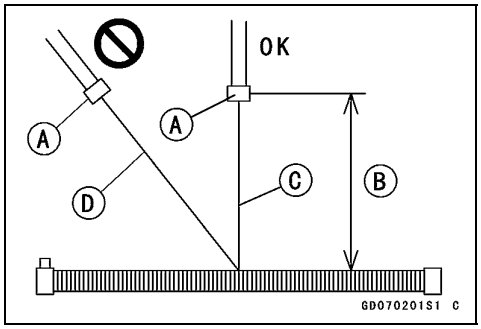

Radiator Cap Inspection

- Remove the radiator cap (see Coolant Change in the Periodic Maintenance chapter).
- Check the condition of the top and bottom valve seals of the radiator cap.

★If any one of them shows visible damage, replace the cap.
Bottom Valve Seal [A]
Top Valve Seal [B]
Valve Spring [C]

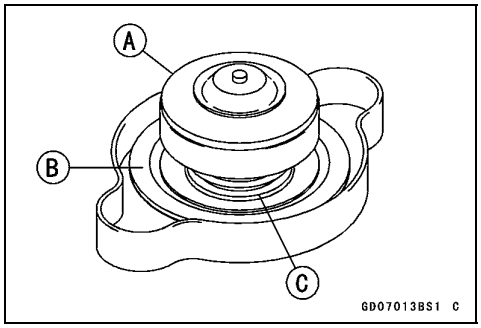

- Install the cap [A] on a cooling system pressure tester [B].

NOTE

○*Wet the cap sealing surfaces with water or coolant to prevent pressure leakage.*

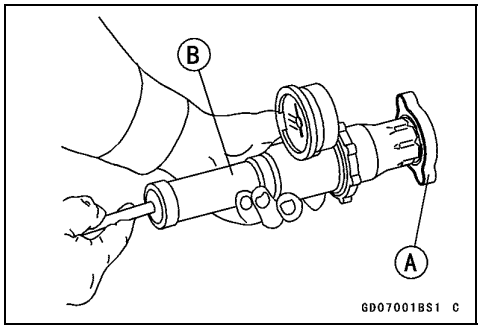

- Watching the pressure gauge, pump the pressure tester to build up the pressure until the relief valve opens: the gauge needle flicks downward. Stop pumping and measure leak time at once. The relief valve must open within the specified range in the table below and the gauge needle must remain within the same range at least 6 seconds.

Radiator Cap Relief Pressure
Standard: 93 ~ 123 kPa (0.95 ~ 1.25 kgf/cm², 13.5 ~ 17.8 psi)

★If the cap holds too much pressure or cannot hold the specified pressure, replace it with a new one.

Downloaded from www.vulcanriders-sweden.org

Radiator

Radiator Filler Neck Inspection

- Remove the radiator cap (see Coolant Change in the Periodic Maintenance chapter).
- Check the radiator filler neck for signs of damage.
- Check the condition of the top and bottom sealing seats [A] in the filler neck. They must be smooth and clean for the radiator cap to function properly.



Downloaded from www.vulcanriders-sweden.org

Thermostat

Thermostat Removal

- Drain the coolant (see Coolant Change in the Periodic Maintenance chapter).
- Remove:
  Fuel Tank (see Fuel Tank Removal in the Fuel System (DFI) chapter)
  Water Hoses [A]
  Bracket Bolts [B]
  Water Temperature Sensor Connector [C]

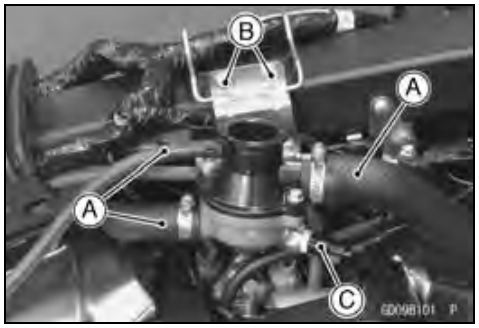

- Remove the water hose [A].
- Remove the thermostat housing [B] along with the bracket.

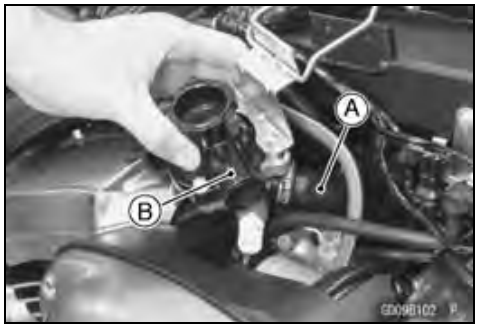

- Remove the thermostat housing cover bolts [A], take off the thermostat housing cover [B], and take out the thermostat.

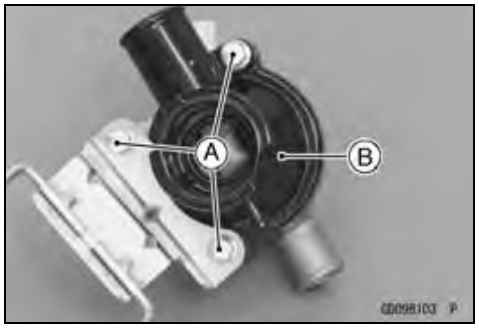

Thermostat Installation

- Replace the O-ring [A] with a new one.
- Apply grease to the new O-ring.
- Install a new O-ring into the thermostat housing [B].
- Install the thermostant housing along with the bracket.
- Run the leads and hoses correctly (see cable, wire and Hoses Routing section in the Appendix chapter).
- Tighten:

Torque - Thermostat Housing Cover Bolts: 9.8 N·m (1.0 kgf·m, 87 in·lb)
Radiator Hose Clamp Screws: 2.0 N·m (0.20 kgf·m, 18 in·lb)

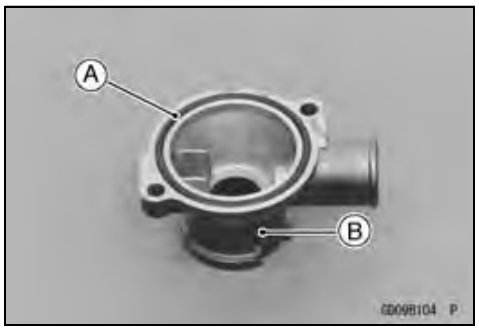

- Fill the radiator with coolant (see Coolant Change in the Periodic Maintenance chapter).

Downloaded from www.vulcanriders-sweden.org

Thermostat

Thermostat Inspection

- Remove the thermostat (see Thermostat Removal).
- Inspect the thermostat valve at room temperature.

★If the valve is open, replace the valve with a new one.

- To check valve opening temperature, suspend the thermostat [A] and an accurate thermometer [B] in a container of water with the heat-sensitive portions [C] in almost the same depth.

NOTE

○*The thermostat must be completely submerged and the thermostat and thermometer must not touch the container sides or bottom.*

- Gradually raise the temperature of the water while stirring the water gently for even temperature.

★If the measurement is out of the range, replace the thermostat.

Thermostat Valve Opening Temperature
58 ~ 62°C (136 ~ 144°F)

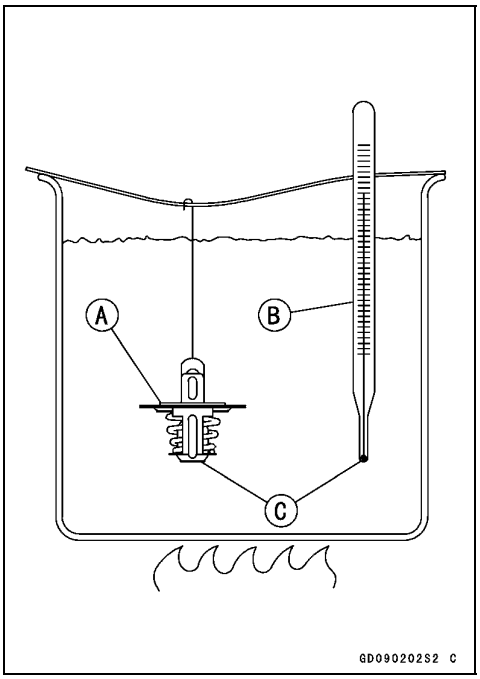

Downloaded from www.vulcanriders-sweden.org

Hoses and Pipes

Water Separator Cover Removal

- Drain the coolant (see Coolant Change in the Periodic Maintenance chapter)
- Remove:
  Water Separator Outer Cover Bolts [A]
  Water Separator Outer Cover [B]



- Remove:
  Water Pipe Bolts [A]
  Upper Water Pipes [B]

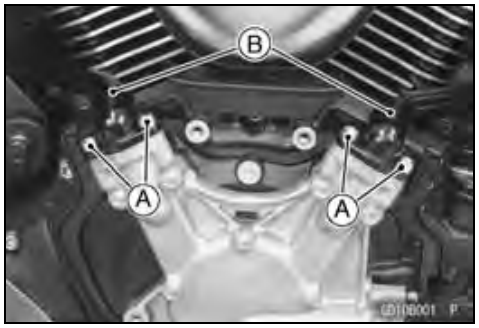

- Remove:
  Water Pipe Bolt [A]
  Water Separator Inner Cover Bolts [B]
- Remove the water separator inner cover [C] together with the lower water pipe [D].

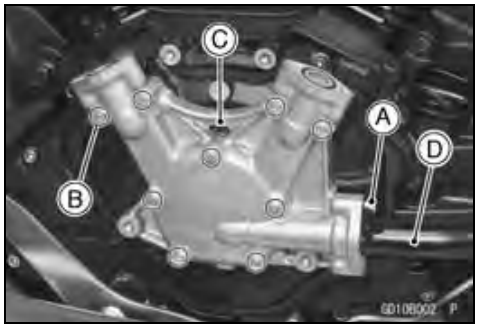

Water Separator Cover Installation

- Replace the O-rings [A] of the water pipes with new ones.
- Apply soap and water solution to the new O-rings.

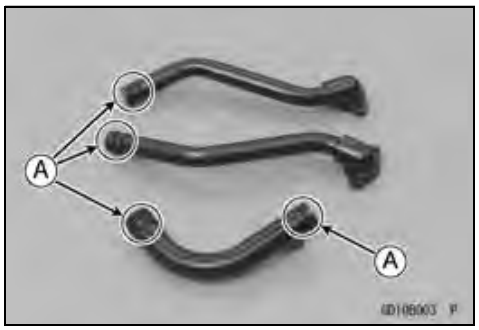

- Be sure that the dowel pins [A] and rubber dampers [B] are in position.
- Replace the water separator inner cover gasket with a new one.
- Install the water separator inner cover together with the lower water pipe.

○When installing the lower water pipe, insert the water pipe into the hole of the alternator cover as far as it will go.

- Tighten:

Torque - Water Separator Inner Cover Bolts: 12 N·m (1.2 kgf·m, 106 in·lb)
Water Pipe Bolt: 12 N·m (1.2 kgf·m, 106 in·lb)

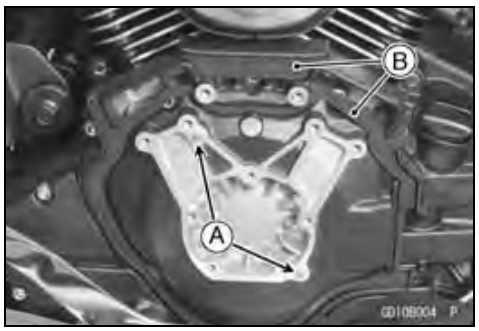

Downloaded from www.vulcanriders-sweden.org

Hoses and Pipes

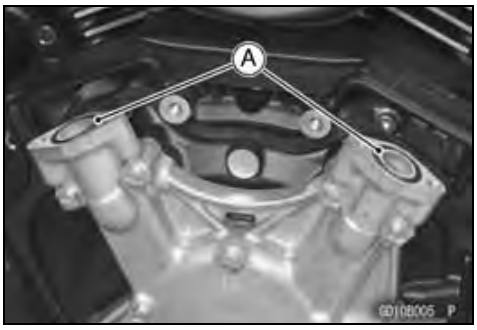

- Replace the O-rings [A] with new ones.
- Apply grease to the new O-rings.
- Install the upper water pipes.

○When installing the upper water pipes, insert the water pipes into the pipe fitting of the cylinder as far as they will go.

- Tighten:

Torque - Water Pipe Bolts: 12 N·m (1.2 kgf·m, 106 in·lb)

- Install the water separator outer cover.
- Tighten:

Torque - Water Separator Outer Cover Bolts: 12 N·m (1.2 kgf·m, 106 in·lb)

Hose Installation

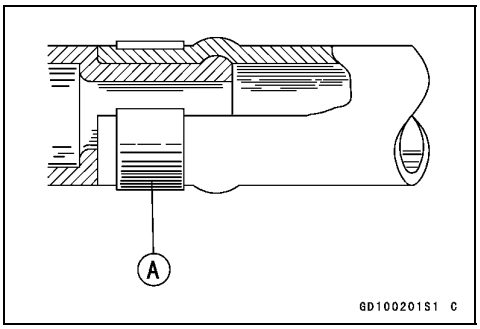

- Install the hoses and pipes being careful to follow bending direction. Avoid sharp bending, kinking, flattening, or twisting.
- Install the clamps [A] as near as possible to the hose end to clear the raised rib on the fitting. This will prevent the hoses from working loose.

○The clamp screws should be positioned correctly to prevent the clamps from contacting the other parts.

Torque - Radiator Hose Clamp Screws: 2.0 N·m (0.20 kgf·m, 18 in·lb)

Hose Inspection

- Whenever the radiator or radiator hoses are removed or in accordance with the Periodic Maintenance Chart, check the radiator or radiator hoses and their connections. Refer to the Radiator Hose Inspection (Coolant Leak, Damage, Installation Condition) in the Periodic Maintenance chapter.

Downloaded from www.vulcanriders-sweden.org

Water Temperature Sensor

Water Temperature Sensor Removal/Installation

- Refer to the Water Temperature Sensor Removal/Installation in the Fuel System (DFI) chapter.

Water Temperature Sensor Inspection

- Refer to the Water Temperature Sensor Inspection in the Electrical System chapter.

Downloaded from www.vulcanriders-sweden.org

Downloaded from www.vulcanriders-sweden.org

Engine Top End

Table of Contents

Exploded View 5-2
Exhaust System Identification 5-6
Specifications 5-8
Special Tools and Sealant 5-10
Clean Air System 5-12
  Air Suction Valve Removal 5-12
  Air Suction Valve Installation 5-12
  Air Suction Valve Inspection 5-12
  Air Switching Valve Removal 5-13
  Air Switching Valve Installation 5-13
  Air Switching Valve Operation Test 5-13
  Air Switching Valve Unit Test 5-14
  Clean Air System Hose Inspection 5-14
Cylinder Head Covers 5-15
  Cylinder Head Cover Removal 5-15
  Cylinder Head Cover Installation 5-15
Rocker Cases 5-18
  Rocker Case Removal 5-18
  Rocker Case Installation 5-20
Rocker Shafts, Rocker Arms 5-23
  Rocker Shaft and Rocker Arm Removal 5-23
  Rocker Shaft and Rocker Arm Installation 5-23
  Rocker Arm Assembly 5-23
  Rocker Shaft Diameter Measurement 5-23
  Rocker Arm Inspection 5-24
HLA (Hydraulic Lash Adjuster) 5-25
  HLA Removal 5-25
  HLA Installation 5-25
  HLA Air Bleeding 5-25
Camshaft Chain Tensioners 5-26
  Camshaft Chain Tensioner Removal 5-26
  Camshaft Chain Tensioner Installation 5-27
Camshafts, Camshaft Chains, Camshaft Sprockets 5-28
  Camshaft Removal 5-28
  Camshaft Installation 5-28
  Camshaft, Rocker Case Wear 5-30
  Camshaft Runout 5-30
  Cam Wear 5-31
  Camshaft Chain Removal 5-31
  Camshaft Chain Installation 5-31
  Camshaft Sprocket Removal 5-31
  Camshaft Sprocket Installation 5-32
KACR (Kawasaki Automatic Compression Release) 5-33
  KACR Inspection 5-33
  KACR Removal 5-33
  KACR Installation 5-34
Cylinder Heads 5-37
  Cylinder Compression Measurement 5-37
  Cylinder Head Removal 5-38
  Cylinder Head Installation 5-38
  Cylinder Head Warp 5-41
Valves 5-42
  Valve Clearance Inspection/Adjustment 5-42
  Valve Removal 5-42
  Valve Installation 5-42
  Valve Guide Removal 5-42
  Valve Guide Installation 5-43
  Valve-to-Guide Clearance Measurement (Wobble Method) 5-43
  Valve Seat Inspection 5-44
  Valve Seat Repair 5-44
Cylinders, Pistons 5-49
  Cylinder Removal 5-49
  Cylinder Installation 5-49
  Piston Removal 5-50
  Piston Installation 5-51
  Cylinder Wear 5-52
  Piston Wear 5-52
  Piston Ring, Piston Ring Groove Wear 5-53
  Piston Ring Groove Width 5-53
  Piston Ring Thickness 5-53
  Piston Ring End Gap 5-54
Mufflers 5-55
  Muffler Body Removal 5-55
  Muffler Body Installation 5-56
  Exhaust Pipe Removal 5-57
  Exhaust Pipe Installation 5-60

Downloaded from www.vulcanriders-sweden.org

Exploded View

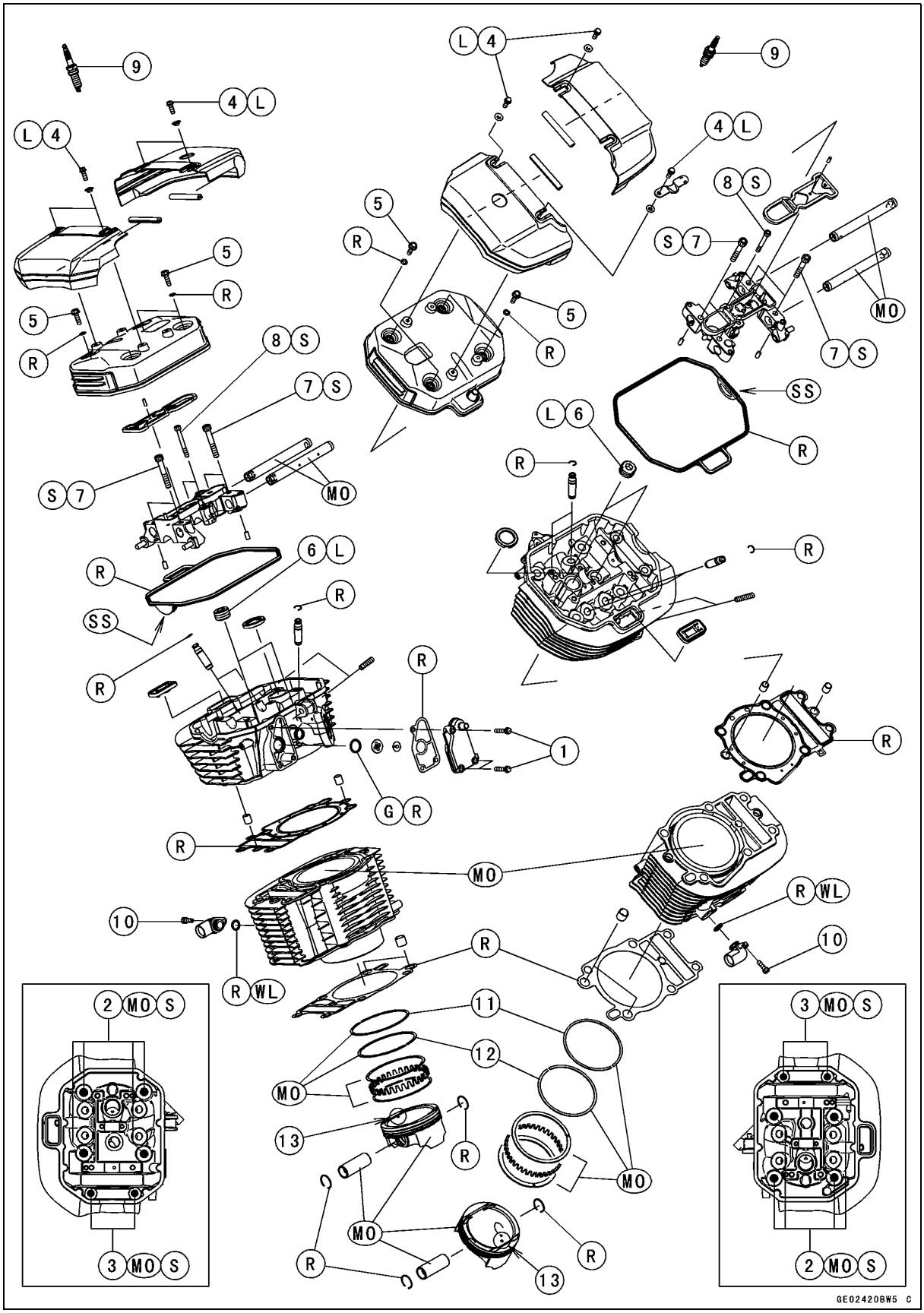

Downloaded from www.vulcanriders-sweden.org

Exploded View

No.	Fastener	Torque			Remarks
		N·m	kgf·m	ft·lb	
1	Breather Check Valve Cover Bolts	9.8	1.0	87 in·lb	
2	Cylinder Head Nuts (M12) (First)	39	4.0	29	MO, S
	Cylinder Head Nuts (M12 New Nuts) (Final)	70	7.1	52	
	Cylinder Head Nuts (M12 Used Nuts) (Final)	77	7.8	57	
3	Cylinder Head Nuts (M10) (First)	20	2.0	15	MO, S
	Cylinder Head Nuts (M10) (Final)	39	4.0	29	
4	Cylinder Head Outer Cover Bolts	9.8	1.0	87 in·lb	L
5	Cylinder Head Inner Cover Bolts	9.8	1.0	87 in·lb	
6	Plugs	20	2.0	15	L
7	Rocker Case Bolts (M8)	20	2.0	15	S
8	Rocker Case Bolts (M6)	9.8	1.0	87 in·lb	S
9	Spark Plugs	18	1.8	13	
10	Water Pipe Fitting Bolts	9.8	1.0	87 in·lb	

11. “R” marked side faces up.
12. “RN” marked side faces up.
13. Hollow mark faces exhaust side.

G: Apply grease.
L: Apply a non-permanent locking agent.
MO: Apply molybdenum disulfide oil solution.
(mixture of the engine oil and molybdenum disulfide grease in a weight ratio 10:1)
R: Replacement Parts
S: Follow the specified tightening sequence.
SS: Apply silicone sealant.
WL: Apply soap and water solution or rubber lubricant.

Downloaded from www.vulcanriders-sweden.org

Exploded View

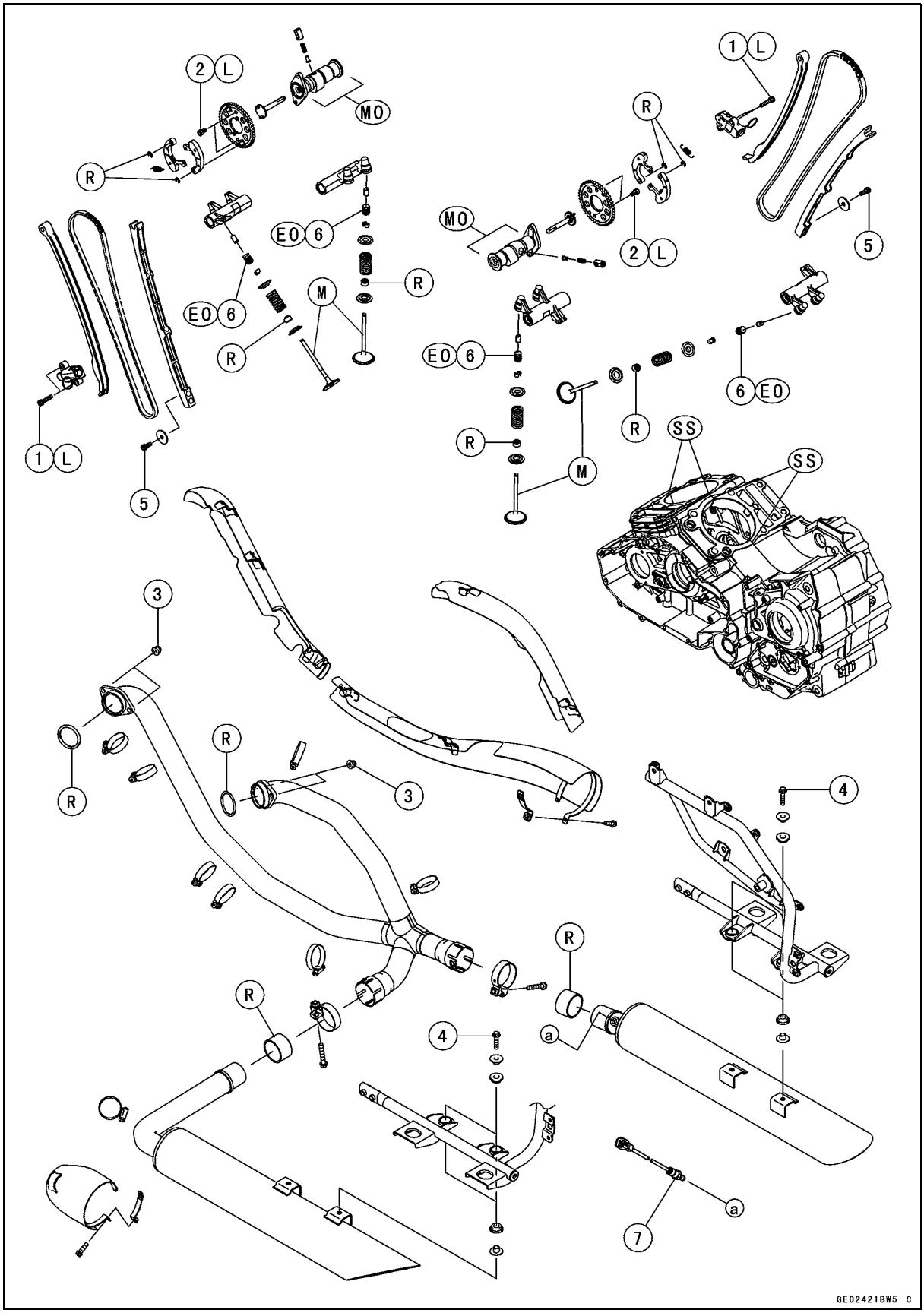

Downloaded from www.vulcanriders-sweden.org

Exploded View

No.	Fastener	Torque			Remarks
		N·m	kgf·m	ft·lb	
1	Camshaft Chain Tensioner Bolts	12	1.2	106in·lb	L
2	Camshaft Sprocket Bolts	15	1.5	11	L
3	Exhaust Pipe Holder Nuts	17	1.7	12	
4	Muffler Body Mounting Bolt	25	2.5	18	
5	Rear Camshaft Chain Guide Retainer Bolts	9.8	1.0	87 in·lb	

6. HLA (Hydraulic Lash Adjuster)
7. Oxygen Sensor (Equipped Models)

EO: Apply engine oil.
L: Apply a non-permanent locking agent.
M: Apply molybdenum disulfide grease.
MO: Apply molybdenum disulfide oil solution.
(mixture of the engine oil and molybdenum disulfide grease in a weight ratio 10:1)
R: Replacement Parts
SS: Apply silicone sealant.

Downloaded from www.vulcanriders-sweden.org

Exhaust System Identification

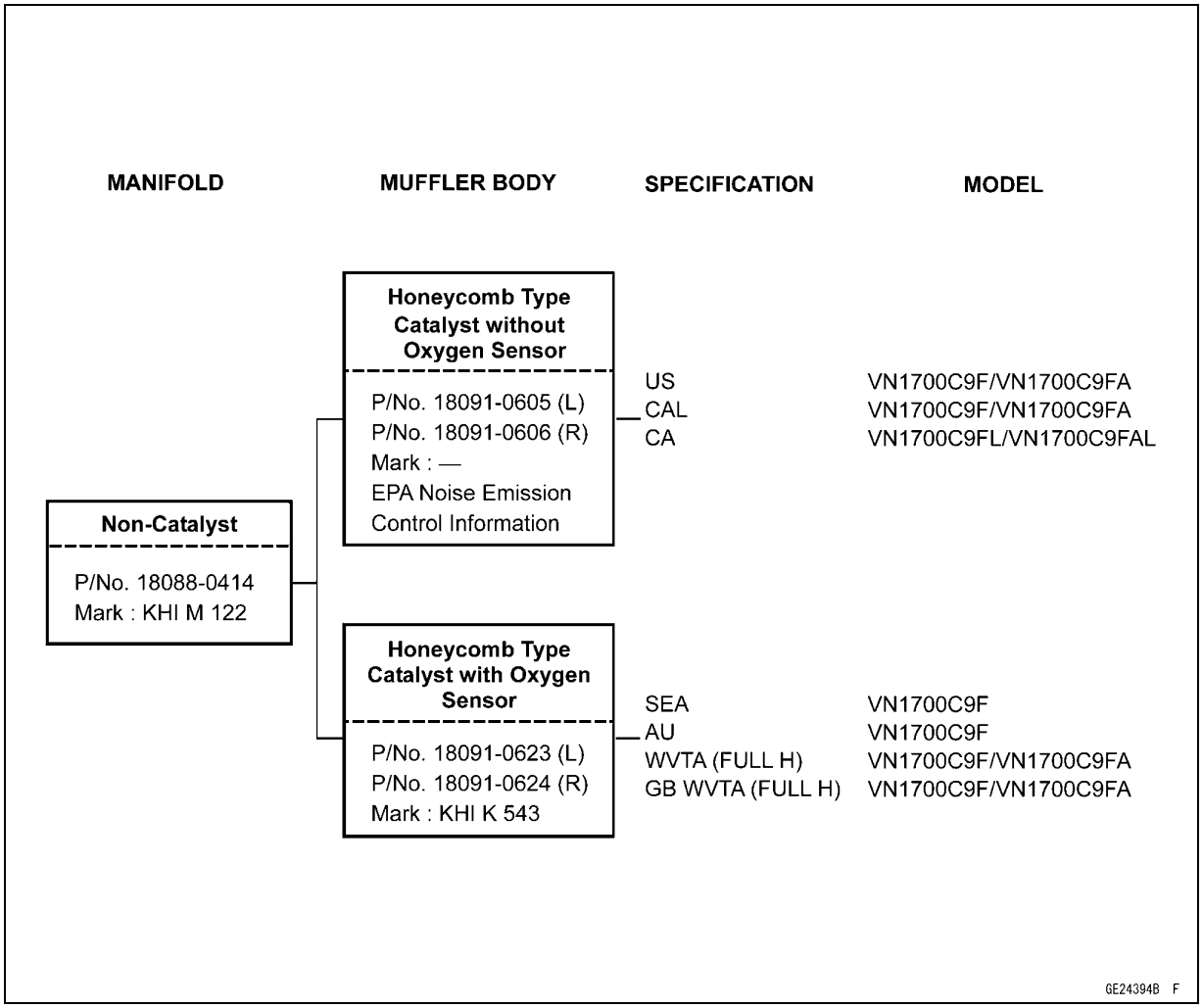

Exhaust Pipe Mark Position [A]

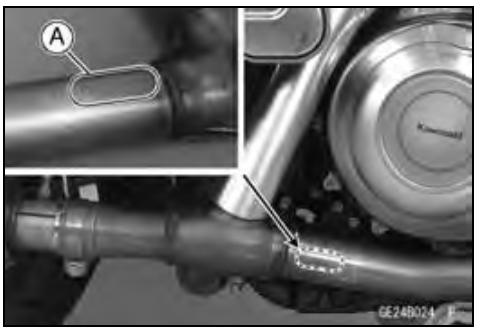

Left Muffler Body Mark Position [A]

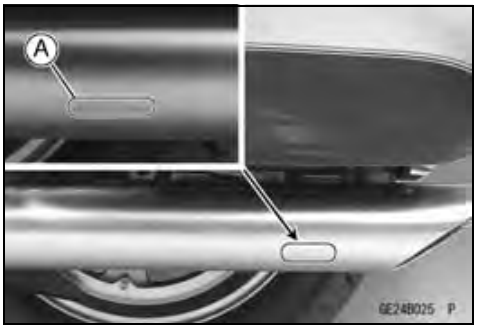

Downloaded from www.vulcanriders-sweden.org

Exhaust System Identification

Right Muffler Body Mark Position [A]

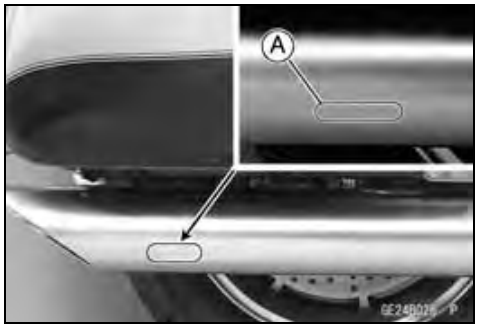

Right Muffler Body [A] with Hole [B] for Oxygen Sensor [C]

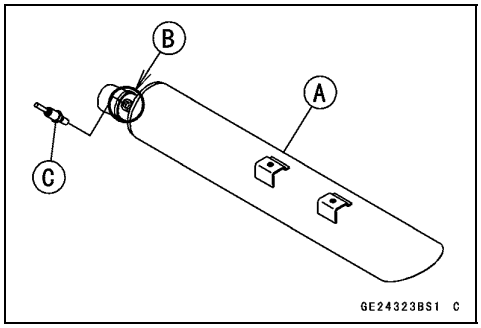

Honeycomb Type Catalyst Positions [A]
Left Muffler Body [B]
Right Muffler Body [C]

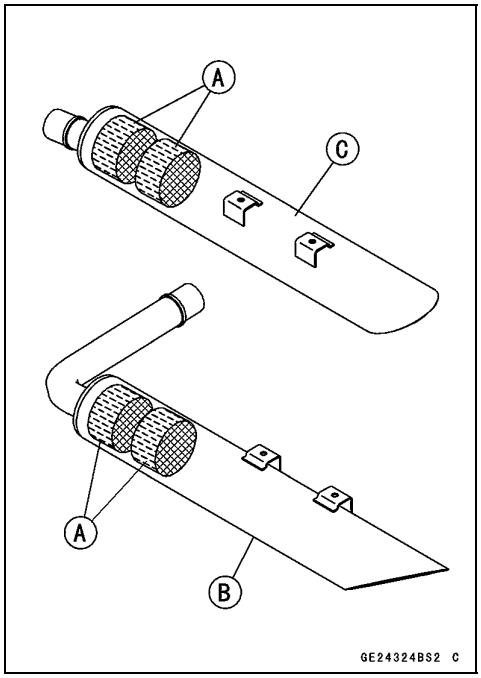

Downloaded from www.vulcanriders-sweden.org

Specifications

Item	Standard	Service Limit
Rocker Shafts, Rocker Arms		
Rocker Shaft Diameter	15.976 ~ 15.994 mm (0.6289 ~ 0.6296 in.)	15.95 mm (0.6279 in.)
Rocker Arm Inside Diameter	16.016 ~ 16.034 mm (0.6305 ~ 0.6312 in.)	16.07 mm (0.6326 in.)
Camshafts		
Cam Height:		
Exhaust	34.422 ~ 34.536 mm (1.3552 ~ 1.3597 in.)	34.32 mm (1.351 in.)
Inlet	34.407 ~ 34.521 mm (1.3546 ~ 1.3591 in.)	34.31 mm (1.350 in.)
Camshaft Journal/Rocker Case Clearance	0.020 ~ 0.062 mm (0.0008 ~ 0.0024 in.)	0.15 mm (0.0059 in.)
Camshaft Journal Diameter	25.959 ~ 25.980 mm (1.0220 ~ 1.0228 in.)	25.93 mm (1.021 in.)
Rocker Case Bearing Inside Diameter	26.000 ~ 26.021 mm (1.0236 ~ 1.0244 in.)	26.08 mm (1.027 in.)
Camshaft Runout	TIR 0.02 mm (0.0008 in.) or less	TIR 0.1 mm (0.004 in.)
Cylinder Heads		
Cylinder Compression	(Usable Range) 420 ~ 698 kPa (4.3 ~ 7.1 kgf/cm^2, 61 ~ 101 psi) at 300 r/min (rpm)	– – –
Cylinder Head Warp	– – –	0.05 mm (0.002 in.)
Valves		
Valve Clearance	Non-adjustable (HLA Type)	– – –
Valve Head Thickness:		
Exhaust	1.0 mm (0.039 in.)	0.6 mm (0.024 in.)
Inlet	0.6 mm (0.024 in.)	0.3 mm (0.012 in.)
Valve Stem Bend	TIR 0.01 mm (0.0004 in.) or less	TIR 0.05 mm (0.002 in.)
Valve Stem Diameter:		
Exhaust	5.955 ~ 5.970 mm (0.2344 ~ 0.2350 in.)	5.94 mm (0.234 in.)
Inlet	5.965 ~ 5.980 mm (0.2348 ~ 0.2354 in.)	5.95 mm (0.234 in.)
Valve Guide Inside Diameter:		
Exhaust	6.000 ~ 6.012 mm (0.2362 ~ 0.2367 in.)	6.08 mm (0.239 in.)
Inlet	6.000 ~ 6.012 mm (0.2362 ~ 0.2367 in.)	6.08 mm (0.239 in.)
Valve/Valve Guide Clearance (Wobble Method):		
Exhaust	0.07 ~ 0.14 mm (0.0028 ~ 0.0055 in.)	0.30 mm (0.012 in.)
Inlet	0.04 ~ 0.10 mm (0.0016 ~ 0.0039 in.)	0.25 mm (0.010 in.)
Valve Seat Cutting Angle	32°, 45°, 55°, 60°	– – –

Downloaded from www.vulcanriders-sweden.org

Specifications

Item	Standard	Service Limit
Valve Seating Surface:		
Width:		
Exhaust	0.8 ~ 1.2 mm (0.031 ~ 0.047 in.)	– – –
Inlet	0.8 ~ 1.2 mm (0.031 ~ 0.047 in.)	– – –
Outside Diameter:		
Exhaust	34.9 ~ 35.1 mm (1.374 ~ 1.382 in.)	– – –
Inlet	38.9 ~ 39.1 mm (1.531 ~ 1.539 in.)	– – –
Valve Spring Free Length	49.2 mm (1.937 in.)	47.5 mm (1.87 in.)
Cylinders, Pistons		
Cylinder Inside Diameter	102.000 ~ 102.012 mm (4.0157 ~ 4.0162 in.)	102.10 mm (4.020 in.)
Piston Diameter	101.942 ~ 101.957 mm (4.0135 ~ 4.0140 in.)	101.79 mm (4.007 in.)
Piston/Cylinder Clearance	0.043 ~ 0.070 mm (0.0017 ~ 0.0028 in.)	– – –
Piston Ring/Groove Clearance:		
Top	0.04 ~ 0.07 mm (0.0015 ~ 0.0027 in.)	0.17 mm (0.0067 in.)
Second	0.02 ~ 0.06 mm (0.0007 ~ 0.0023 in.)	0.16 mm (0.0063 in.)
Piston Ring Groove Width:		
Top	1.23 ~ 1.24 mm (0.0484 ~ 0.0488 in.)	1.32 mm (0.0520 in.)
Second	1.21 ~ 1.23 mm (0.0476 ~ 0.0484 in.)	1.31 mm (0.0516 in.)
Piston Ring Thickness:		
Top	1.17 ~ 1.19 mm (0.0461 ~ 0.0469 in.)	1.10 mm (0.0433 in.)
Second	1.17 ~ 1.19 mm (0.0461 ~ 0.0469 in.)	1.10 mm (0.0433 in.)
Piston Ring End Gap:		
Top	0.25 ~ 0.35 mm (0.0098 ~ 0.0138 in.)	0.7 mm (0.028 in.)
Second	0.40 ~ 0.55 mm (0.0157 ~ 0.0217 in.)	0.9 mm (0.035 in.)

Downloaded from www.vulcanriders-sweden.org

Special Tools and Sealant

Compression Gauge, 20 kgf/cm²:
57001-221

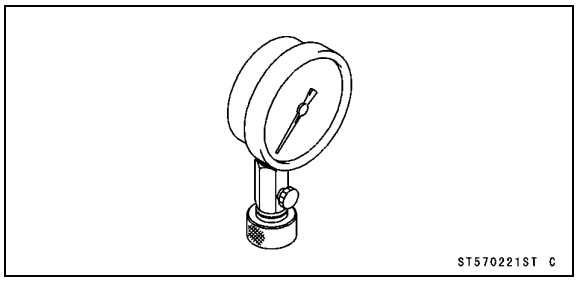

Valve Spring Compressor Assembly:
57001-241

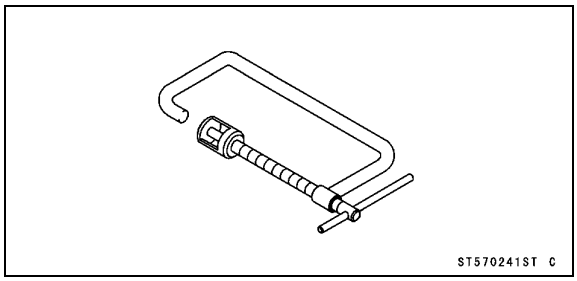

Valve Spring Compressor Adapter, ϕ28.2:
57001-243

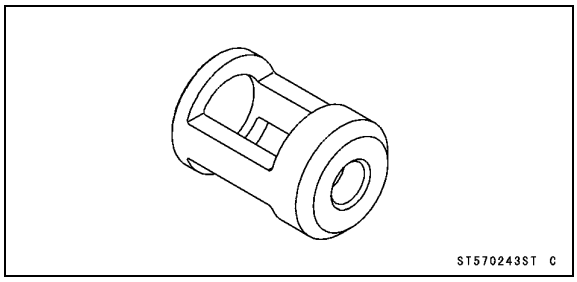

Valve Guide Arbor, ϕ5.5:
57001-1021

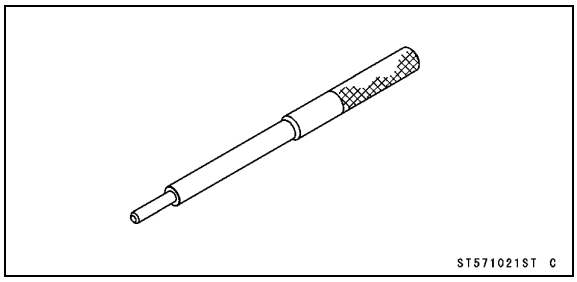

Piston Ring Compressor Grip:
57001-1095

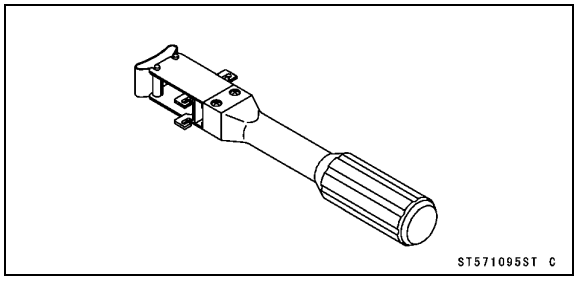

Valve Seat Cutter, 45° - ϕ41.5:
57001-1117

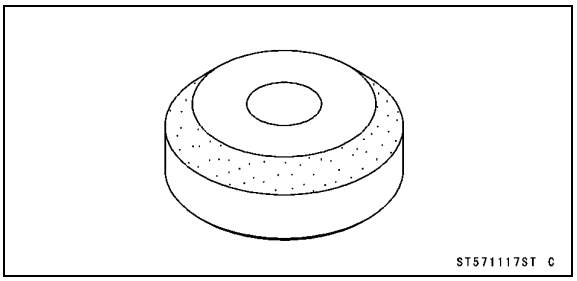

Valve Seat Cutter, 32° - ϕ38.5:
57001-1122

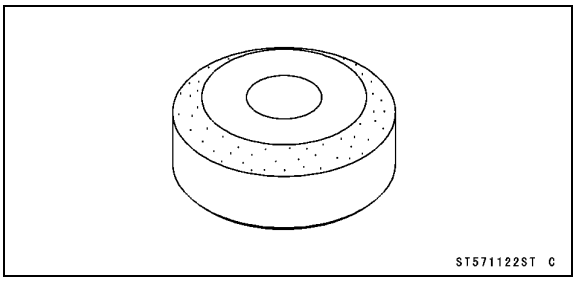

Valve Seat Cutter, 60° - ϕ41:
57001-1124

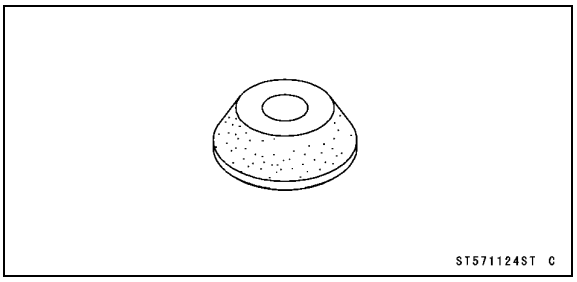

Valve Seat Cutter Holder Bar:
57001-1128

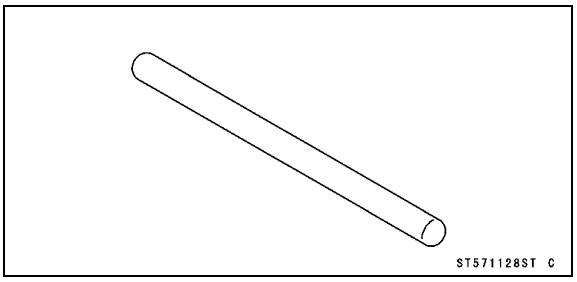

Piston Ring Compressor Belt, ϕ95 ~ ϕ108:
57001-1358

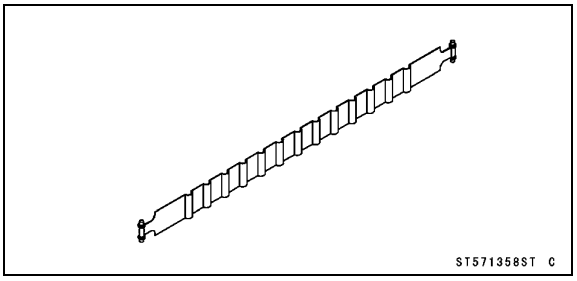

Downloaded from www.vulcanriders-sweden.org

Special Tools and Sealant

Valve Seat Cutter, 45° - ϕ40:
57001-1496

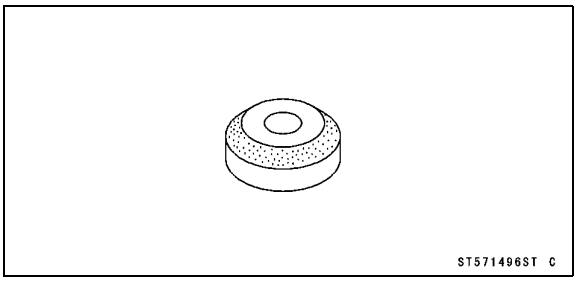

Valve Seat Cutter, 55° - ϕ38.5:
57001-1497

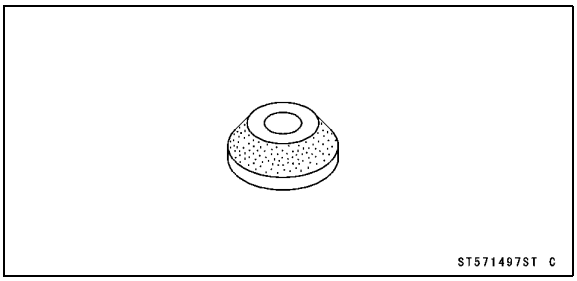

Valve Seat Cutter, 32°- ϕ44:
57001-1515

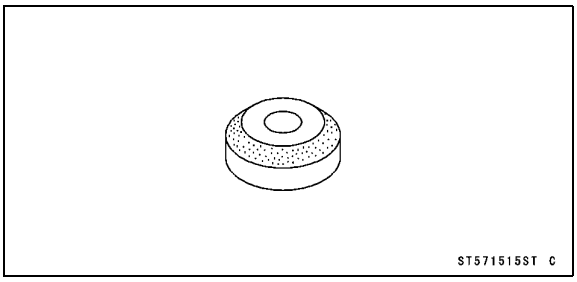

Valve Guide Driver:
57001-1564

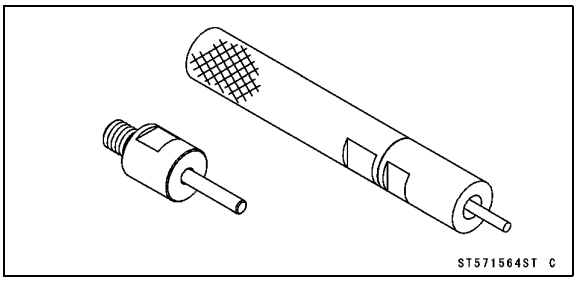

Piston Pin Puller:
57001-1568

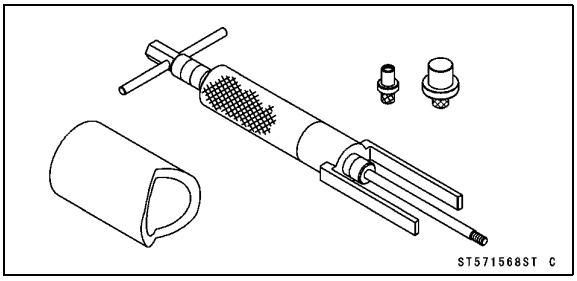

Valve Seat Cutter Holder, ϕ6:
57001-1576

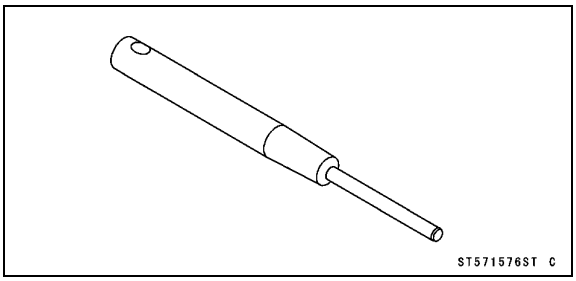

Valve Guide Reamer, ϕ6:
57001-1596

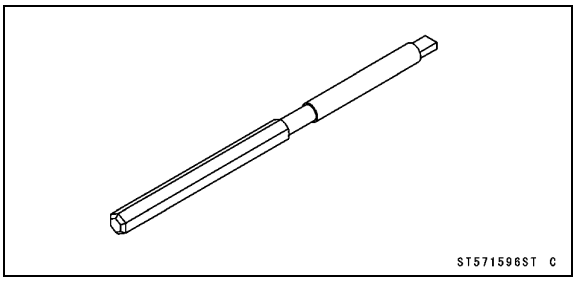

Compression Gauge Adapter, M12 × 1.25:
57001-1733

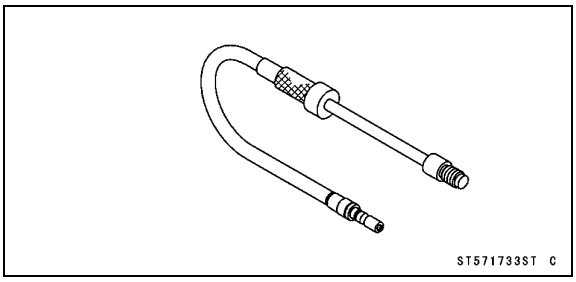

Kawasaki Bond (Silicone Sealant):
92104-0004

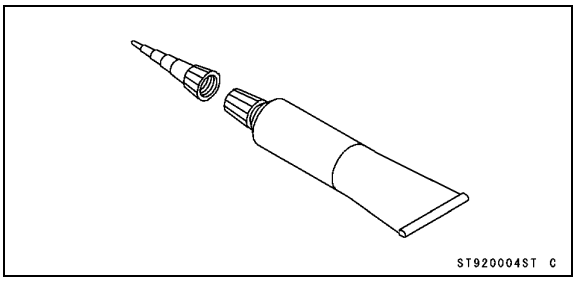

Downloaded from www.vulcanriders-sweden.org

Clean Air System

Air Suction Valve Removal

Air Suction Valve of Front Cylinder

- Remove:
  Cylinder Head Inner Cover (see Cylinder Head Cover Removal)
  Air Suction Valve [A]



Air Suction Valve of Rear Cylinder

- Remove:
  Engine (see Engine Removal in the Engine Removal/Installation chapter)
  Cylinder Head Inner Cover (see Cylinder Head Cover Removal)
  Air Suction Valve [A]



Air Suction Valve Installation

- Install the air suction valve [A] so that the stopper [B] of the reed faces downward.



Air Suction Valve Inspection

- Remove the air suction valve (see Air Suction Valve Removal).
- Visually inspect the reeds [A] for cracks, folds, warps, heat damage or other damage.

★If there is any doubt as to the condition of the reeds, replace the air suction valve as an assembly.

- Check the reed contact areas [B] of the valve holder for grooves, scratches, any signs of separation from the holder or heat damage.

★If there is any doubt as to the condition of the reed contact areas, replace the air suction valve as an assembly.

★If any carbon or other foreign particles have accumulated between the reed and the reed contact area, wash the valve assembly clean with a high-flash point solvent.



CAUTION

Do not scrape off the deposits with a scraper as this could damage the rubber, requiring replacement of the suction valve assembly.

Downloaded from www.vulcanriders-sweden.org

Clean Air System

Air Switching Valve Removal

CAUTION

Never drop the air switching valve, especially on a hard surface. Such a shock to the air switching valve can damaged it.



- Remove the ignition coils (see Ignition Coil Removal in the Electrical System chapter).
- Disconnect the connector [A].

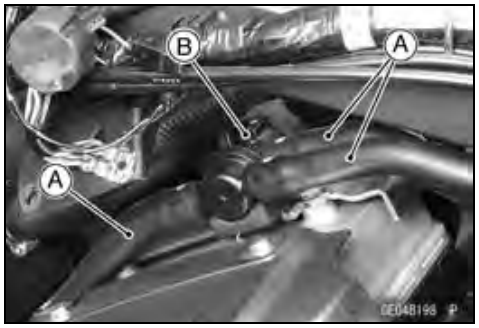

- Separate the hoses [A] from the air switching valve [B], and remove the air switching valve.

Air Switching Valve Installation

- Check that the rubber protector [A] is installing on the air switching valve [B] correctly.

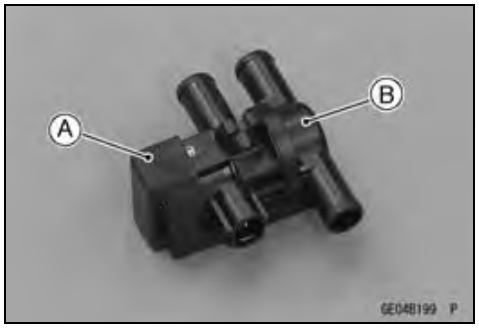

- Install the air switching valve [A] with hoses as shown in the figure.
  White Marks [B]
  Rubber Damper [C]
  Front [D]
  Upside View [E]
  Front View [F]

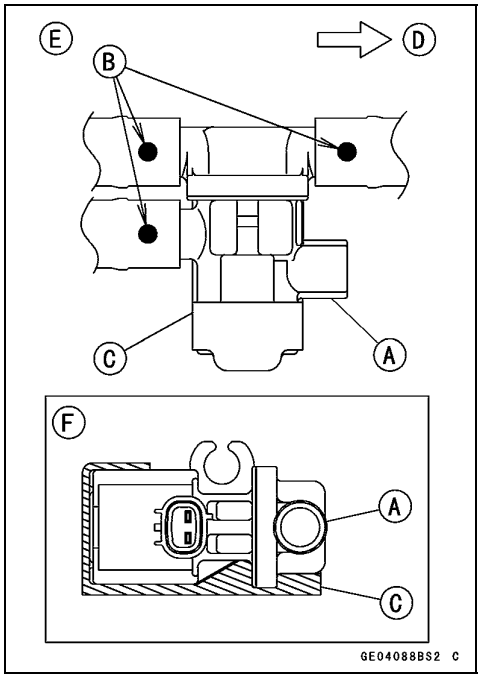

Air Switching Valve Operation Test

- Refer to the Air Suction System Damage Inspection in the Periodic Maintenance chapter.

Downloaded from www.vulcanriders-sweden.org

Clean Air System

Air Switching Valve Unit Test

- Refer to the Air Switching Valve Unit Test in the Electrical System chapter.

Clean Air System Hose Inspection

- Be certain that all the hoses are routed without being flattened or kinked, and are connected correctly to the air cleaner housing, air switching valve, and fittings on the cylinder head covers.

★If they are not, correct them. Replace them if they are damaged.

Downloaded from www.vulcanriders-sweden.org

Cylinder Head Covers

Cylinder Head Cover Removal

Front Cylinder Head Cover

- Remove:
  Air Switching Valve (see Air Switching Valve Removal)
  Cylinder Head Outer Cover Bolts [A] with Collars
  Cylinder Head Outer Covers [B]

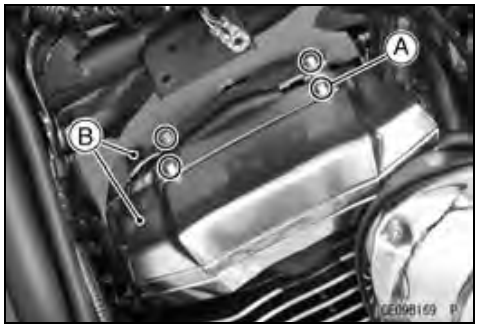

- Remove:
  Cylinder Head Inner Cover Bolts [A] with Gaskets
  Cylinder Head Inner Cover [B]



Rear Cylinder Head Cover

- Remove:
  Engine (see Engine Removal in the Engine Removal/Installation chapter)
  Cylinder Head Outer Cover Bolts [A] with Collars
  Plate [B] with Collar
  Cylinder Head Outer Covers [C]

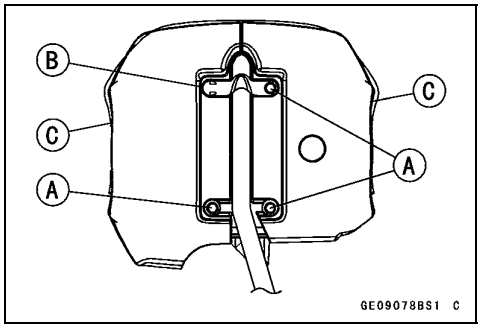

- Remove:
  Cylinder Head Inner Cover Bolts [A] with Gaskets
  Cylinder Head Inner Cover [B]



Cylinder Head Cover Installation

- Before installing the cylinder head inner cover, be sure to install the following parts.
  Dowel Pin [A]
  Plug Hole Gasket (Upper) [B]
  Air Suction Valve (see Air Suction Valve Cover Installation)

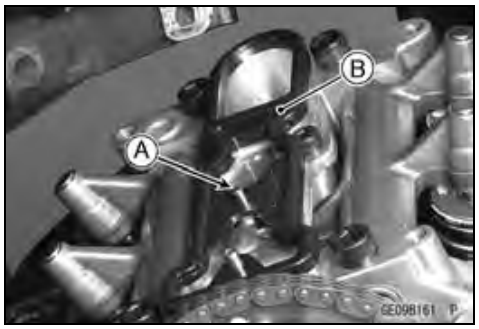

Downloaded from www.vulcanriders-sweden.org

Cylinder Head Covers

- Replace the cylinder head inner cover gasket [A] with a new one, and install it on the cylinder head inner cover [B].
- Apply silicone sealant to the mating surface of the half -month portion [C], and install the gasket on the cylinder head.

Sealant - Kawasaki Bond (Silicone Sealant) : 92104-0004

- After installation, wipe up the silicone sealant that seeps out around the mating surface.



- Replace the gaskets [A] with new ones.
- Tighten:

Torque - Cylinder Head Inner Cover Bolts [B] : 9.8 N·m (1.0 kgf·m, 87 in·lb)

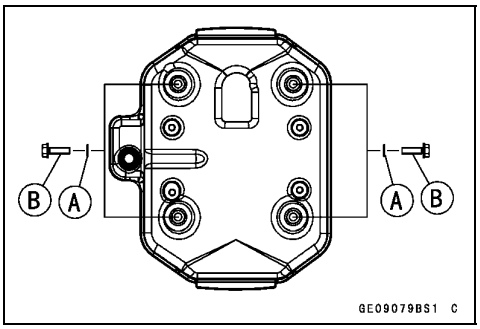

- Install the trim [A] to the cylinder head outer cover [B], and fit the trim onto the slot [C] of the cylinder head inner cover [D].
- Install the cylinder head outer cover of the other side in the same way.

NOTE

○*The front and rear cylinder head cover installation are same procedures as until above procedures.*

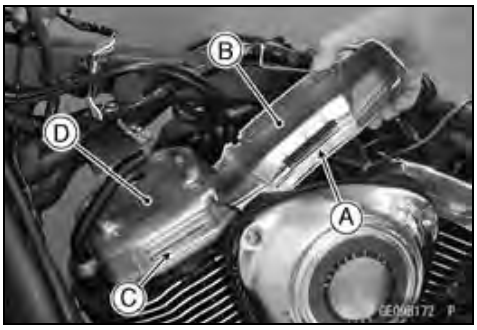

Front Cylinder Head Cover

- Install the collars [A] on the seating surfaces (shaded portions) [B] of the cylinder head outer covers [C] as shown in the figure.
- Apply a non-permanent locking agent to the threads of the cylinder head outer cover bolts [D], and tighten them.

Torque - Cylinder Head Outer Cover Bolts: 9.8 N·m (1.0 kgf·m, 87 in·lb)

Downloaded from www.vulcanriders-sweden.org

Cylinder Head Covers

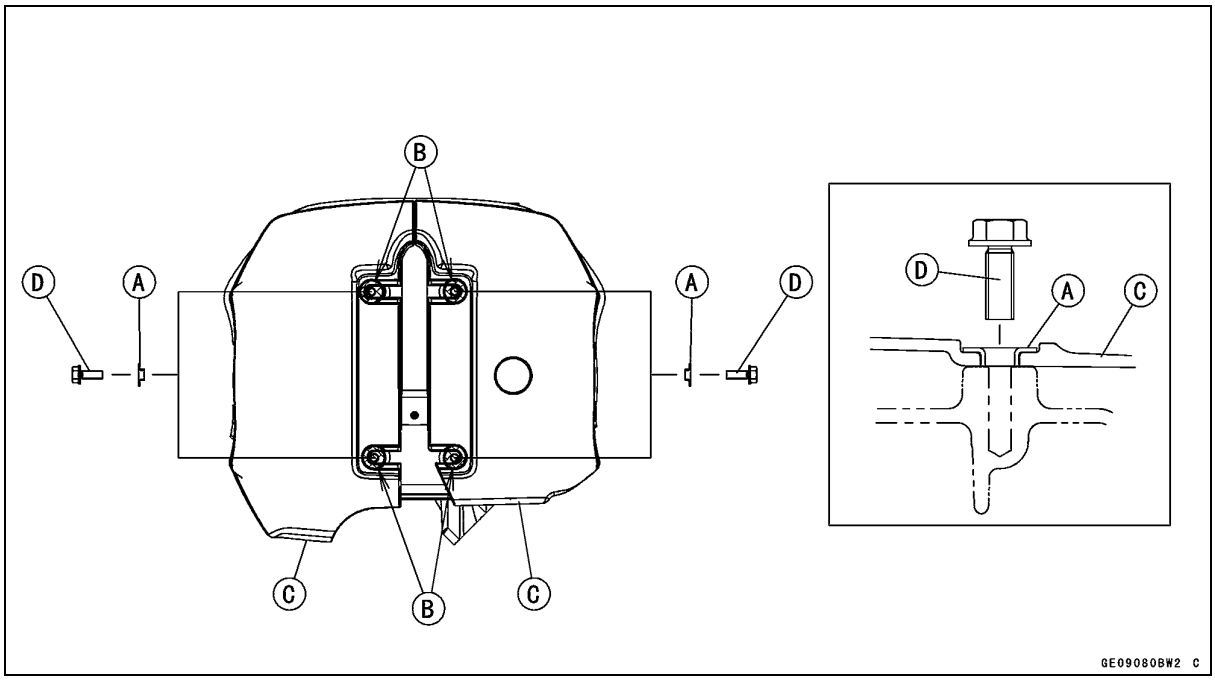

Rear Cylinder Head Cover

- Install the collars [A] on the seating surfaces (shaded portions) [B] of the cylinder head outer covers [C] as shown in the figure.
- Install the plate [D] so that the tabs [E] fit onto the seating surface of the cylinder head outer cover as shown in the figure.
- Apply a non-permanent locking agent to the threads of the cylinder head outer cover bolts [F], and tighten them.

Torque - Cylinder Head Outer Cover Bolts: 9.8 N·m (1.0 kgf·m, 87 in·lb)

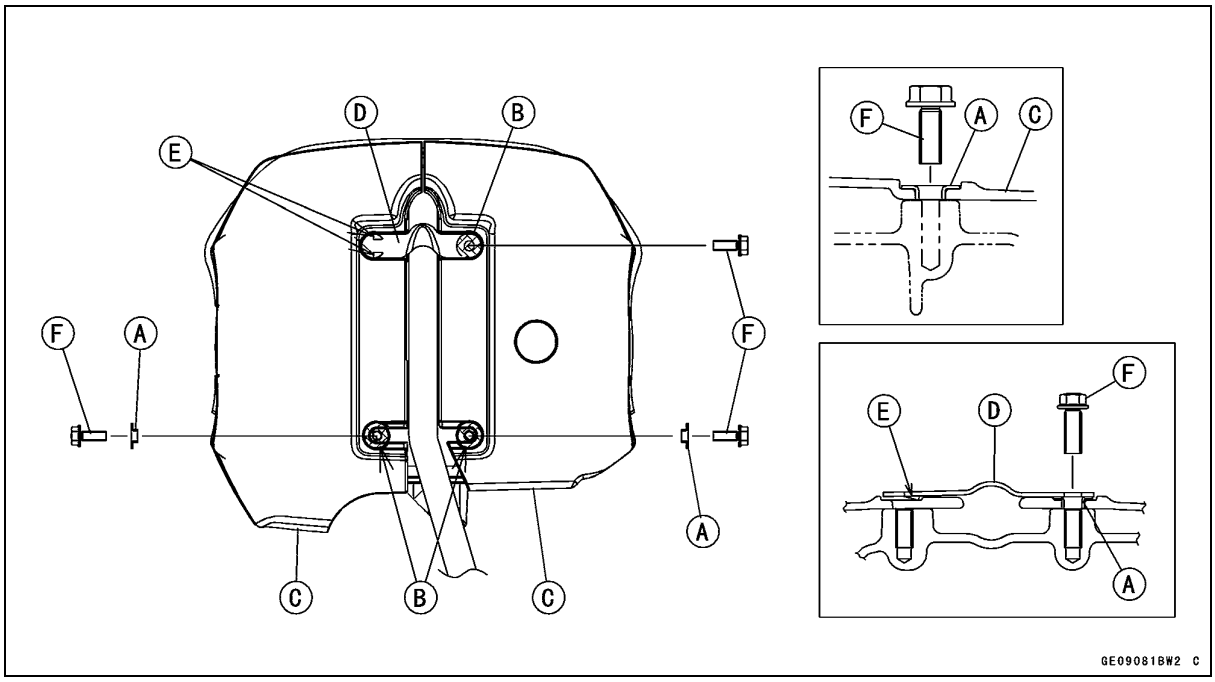

Downloaded from www.vulcanriders-sweden.org

Rocker Cases

Rocker Case Removal

Front Rocker Case

● Remove:
Cylinder Head Inner Cover (see Cylinder Head Cover Removal)
Alternator Cover (see Alternator Cover Removal in the Electrical System chapter)

● Using a wrench on the alternator rotor bolt, turn the crankshaft clockwise [A] until the “FRONT” mark line (TDC mark for front piston) [B] of the alternator rotor [C] is aligned with the projection [D] of the crankcase.

○Remove the spark plug (see Spark Plug Replacement in the Periodic Maintenance chapter) to turn the crankshaft easily.

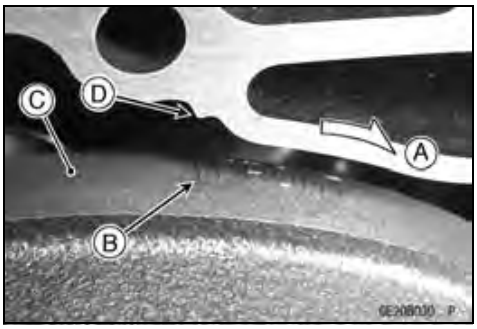

★If the alternator rotor was removed, perform the next procedure.

○Install the alternator bolt [A] together with the washer [B] on the crankshaft temporary.

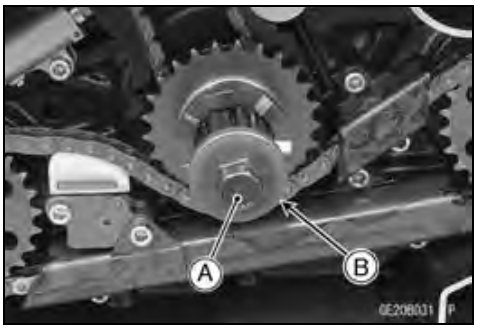

○Using a wrench on the alternator rotor bolt, turn the crankshaft clockwise [A] until the “F” mark line (TDC mark for front piston) [B] of the balancer chain sprocket [C] is aligned with the line [D] of the crankcase.

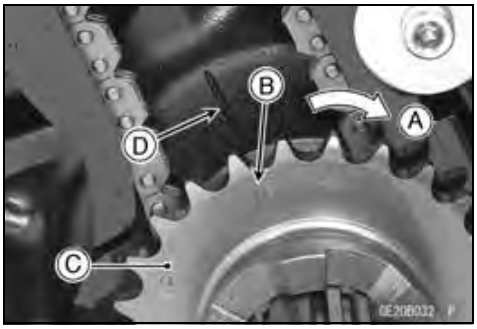

● Check that the front camshaft chain timing is positioned as shown in the figure.
“△” Mark [A] of Camshaft Sprocket
Timing Marks [B] of Weights
Upper Surface of Cylinder Head [C]
Left Side View [D]

○The timing marks must be aligned with the cylinder head upper surface.

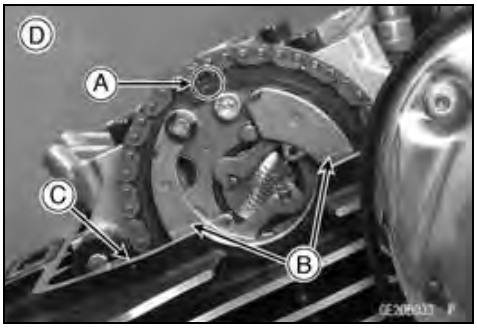

Downloaded from www.vulcanriders-sweden.org

Rocker Cases

● Remove the camshaft chain tensioner (see Camshaft Chain Tensioner Removal).
● Loosen the M6 and M8 rocker case bolts as shown sequence [1 ~ 6] in the figure, and remove them.

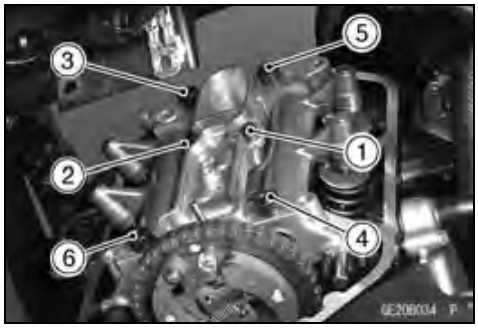

● Lift the rocker case [A], and remove the front camshaft chain guide [B] from the pin of the case.

NOTE

○*The cylinder head and rocker case are machined in the assemble state, so they must be used as a set. Be careful not to mix them up for front and rear cylinders.*



Rear Rocker Case

● Remove:
Cylinder Head Inner Cover (see Cylinder Head Cover Removal)
Alternator Cover (see Alternator Cover Removal in the Electrical System chapter)

● Using a wrench on the alternator rotor bolt, turn the crankshaft clockwise [A] until the “REAR” mark line (TDC mark for rear piston) [B] of the alternator rotor [C] is aligned with the projection [D] of the crankcase.
○Remove the spark plug (see Spark Plug Replacement in the Periodic Maintenance chapter) to turn the crankshaft easily.

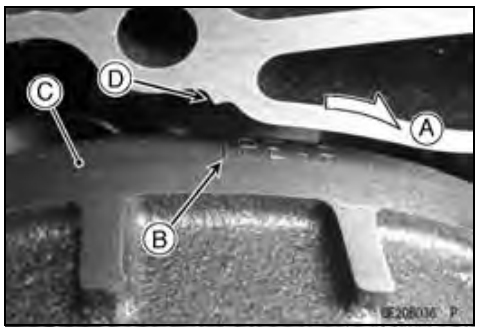

★If the alternator rotor was removed, perform the next procedure.
○Install the alternator bolt [A] together with the washer [B] on the crankshaft temporarily.

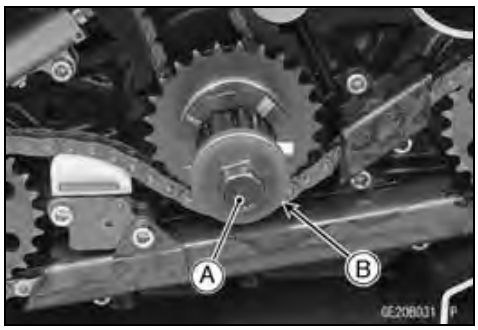

Downloaded from www.vulcanriders-sweden.org

Rocker Cases

○Using a wrench on the alternator rotor bolt, turn the crankshaft clockwise [A] until the “R” mark line (TDC mark for rear piston) [B] of the balancer chain sprocket [C] is aligned with the line [D] of the crankcase.

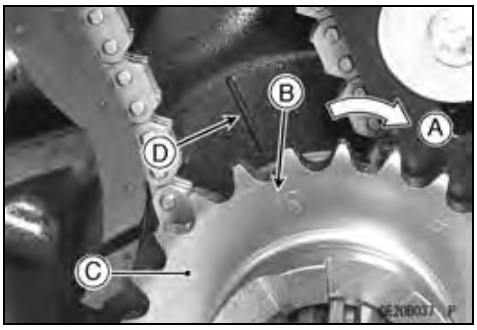

● Check that the rear camshaft chain timing is positioned as shown in the figure.
“△” Mark [A] of Camshaft Sprocket
Timing Marks [B] of Weights
Upper Surface of Cylinder Head [C]
Right Side View [D]
○The timing marks must be aligned with the cylinder head upper surface.

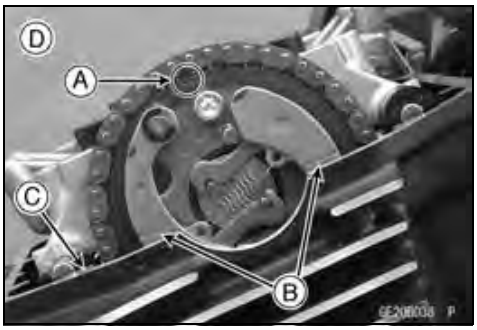

● Remove the camshaft chain tensioner (see Camshaft Chain Tensioner Removal).
● Loosen the M6 and M8 rocker case bolts as shown sequence [1 ~ 6] in the figure, and remove them.

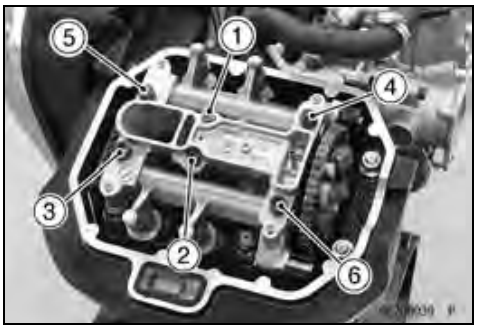

● Lift the rocker case [A], and remove the front camshaft chain guide [B] from the pin of the case.

NOTE

○*The cylinder head and rocker case are machined in the assemble state, so they must be used as a set. Be careful not to mix them up for front and rear cylinders.*



Rocker Case Installation

● Before installing rocker case, check that the crankshaft is positioned at TDC and at the end of the compression stroke.

Downloaded from www.vulcanriders-sweden.org

Rocker Cases

- Apply molybdenum disulfide oil solution to all cam parts and journals.
- Install the plug hole gasket [A] so that the cutout portions [B] fit onto the ribs [C] of the cylinder head.

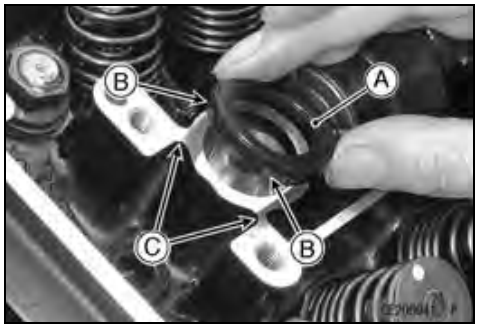

- Install the dowel pins [A].

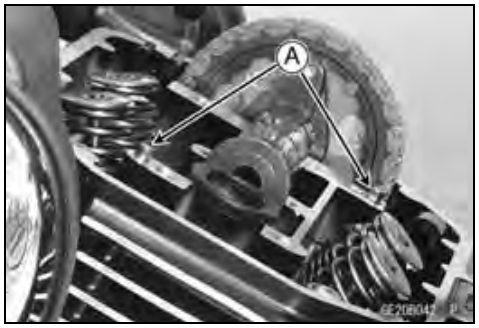

- Insert the pin [A] of the rocker case to the hole of the front camshaft chain guide [B].
- Install the rocker case so that the pin [C] fits onto the groove [D] of the rear camshaft chain guide [E].



- Tighten the rocker case bolts following the specified tightening sequence.
  Inlet Side [A]

Torque - Rocker Case Bolts (M8) [1 ~ 4] : 20 N·m (2.0 kgf·m, 15 ft·lb)
Rocker Case Bolts (M6) [5, 6] : 9.8 N·m (1.0 kgf·m, 87 in·lb)

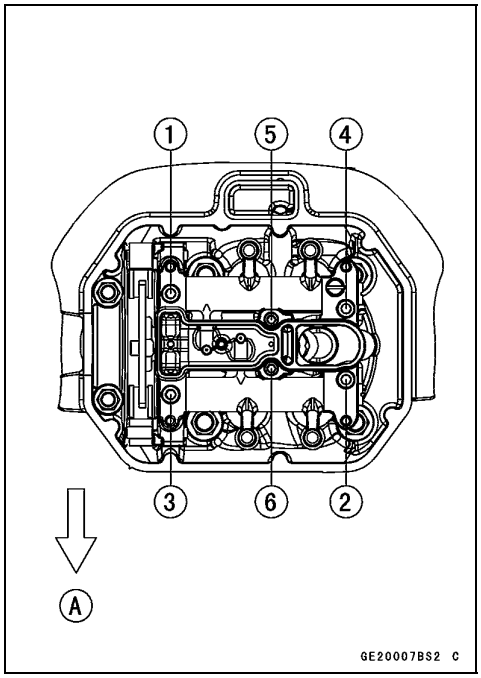

Downloaded from www.vulcanriders-sweden.org

Rocker Cases

- Install the camshaft chain tensioner (see Camshaft Chain Tensioner Installation).
- After installing the camshaft chain tensioner, check to be sure that the camshaft chain timing is correct.
- Turn the crankshaft clockwise and recheck the camshaft chain timing.

Downloaded from www.vulcanriders-sweden.org

Rocker Shafts, Rocker Arms

Rocker Shaft and Rocker Arm Removal

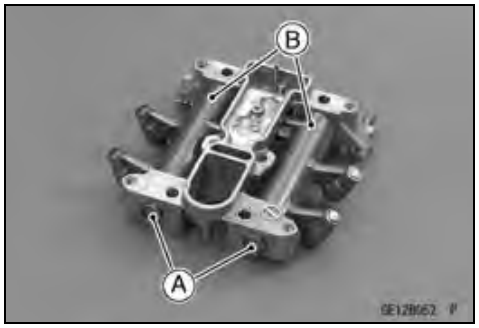

- Remove:
  Rocker Case (see Rocker Case Removal)
  Rocker Shafts [A]
  Rocker Arms [B]

Rocker Shaft and Rocker Arm Installation

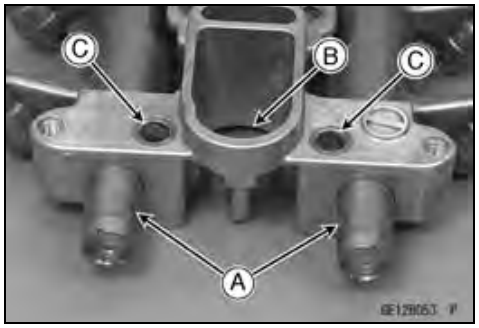

- Apply molybdenum disulfide oil solution to the rocker shafts.

○The rocker shafts are identical.

- Insert the rocker shafts into the rocker case and rocker arms so that the notches [A] face to the plug hole side [B].
- Align the M8 bolt holes [C] of the rocker case and the notches of the rocker shaft.

Rocker Arm Assembly

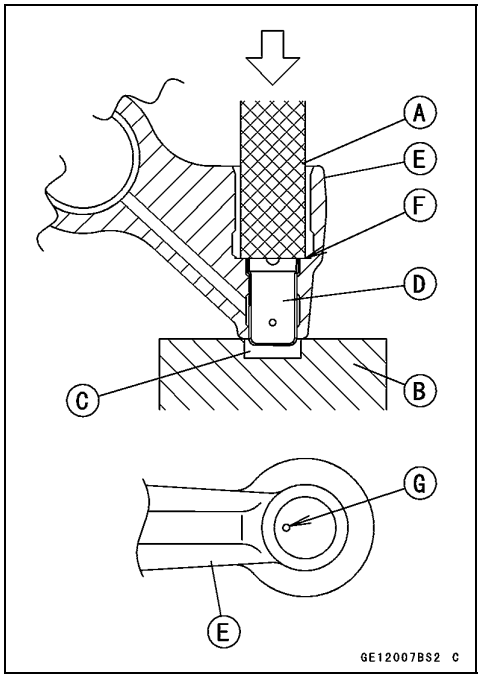

- Prepare a flat-end bar [A] and a block [B] with a recess [C].
- Press the oil chamber [D] for the HLA into the rocker arm end [E] until the chamber end is even with the step [F] of the hole.

○Install the oil chamber so that the air bleed hole [G] is placed as shown in the figure. This makes HLA bleeding easier.

Rocker Shaft Diameter Measurement

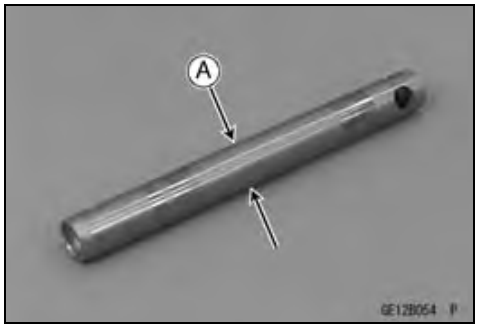

- Remove the rocker shaft (see Rocker Shaft and Rocker Arm Removal).
- Measure the diameter [A] of the rocker shaft where the rocker arm pivots on it with a micrometer.

★If the rocker shaft diameter is smaller than the service limit, replace it. Also check the rocker arm inside diameter (see Rocker Arm Inspection).

Rocker Shaft Diameter

Standard: 15.976 ~ 15.994 mm (0.6289 ~ 0.6296 in.)

Service Limit: 15.95 mm (0.6279 in.)

Downloaded from www.vulcanriders-sweden.org

Rocker Shafts, Rocker Arms

Rocker Arm Inspection

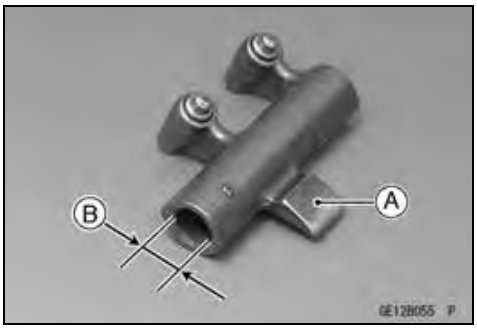

- Remove the rocker arm (see Rocker Shaft and Rocker Arm Removal).
- Inspect the area [A] on the rocker arm where the cam rubs.

★If the rocker arm is scored, discolored or otherwise damaged, replace it. Also inspect the camshaft lobes.

- Measure the inside diameter [B] of the rocker arm with a dial bore gauge.

★If the rocker arm inside diameter is larger than the service limit, replace it. Also check the rocker shaft diameter (see Rocker Shaft Diameter Measurement).

Rocker Arm Inside Diameter

Standard: 16.016 ~ 16.034 mm (0.6305 ~ 0.6312 in.)

Service Limit: 16.07 mm (0.6326 in.)

Downloaded from www.vulcanriders-sweden.org

HLA (Hydraulic Lash Adjuster)

HLA Removal

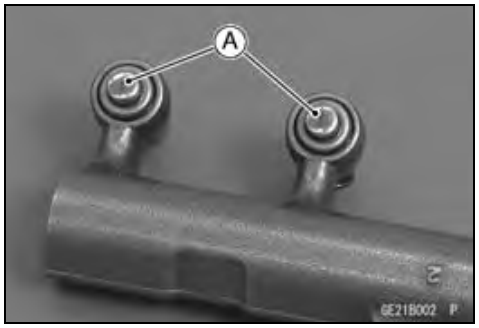

- Remove the rocker arm (see Rocker Shaft and Rocker Arm Removal).
- Pull the HLA (Hydraulic Lash Adjuster) [A] out of the rocker arm with fingers.

CAUTION

Be careful not to damage or deform an HLA by tapping it during removal or installation.
Do not drop the HLA or hit it sharply. If it is damaged, the plunger will not operate smoothly.

HLA Installation

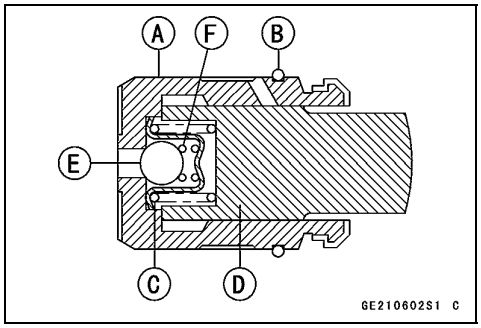

- Check that the HLA plunger is not damaged.

★If the plunger does damage, replace the HLA.
HLA Body [A]
O-ring [B]
Plunger Spring [C]
Pivot Plunger [D]
Check Valve [E]
Check Valve Spring [F]

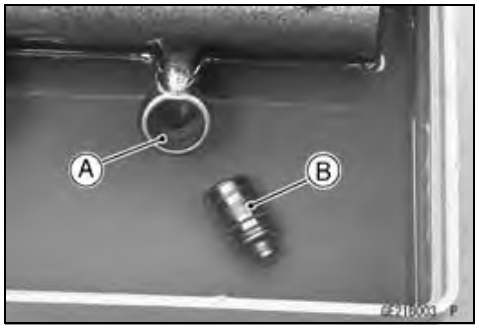

- Air-bleed the HLA (see HLA Air Bleeding).
- Soak a rocker arm [A] in engine oil, and then insert the HLA [B] into the rocker arm.

○Be careful not to tip the rocker arm having the HLA, and not to allow engine oil to leak out of the HLA.

HLA Air Bleeding

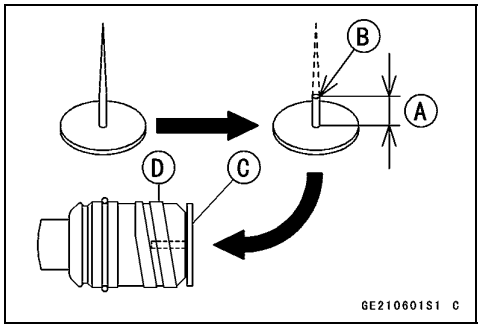

- Fill a container with engine oil.
- Prepare a thumbtack and cut its needle to 2.1 ~ 2.3 mm (0.0827 ~ 0.0906 in.) long [A]. Grind its cutting edge [B] smooth.
- Push in the check valve of the HLA [D] with the needle of the tack [C] and move the plunger up and down in the oil bath.

★If the plunger sinks into the HLA body, repeat the air bleeding procedure and then push the plunger.

★After air bleeding, if the plunger sinks into the HLA body again, replace the HLA.

CAUTION

Do not push the check valve in more than 2.1 ~ 2.3 mm (0.0827 ~ 0.0906 in.). Pushing too deep may cause the damage of the HLA.

Downloaded from www.vulcanriders-sweden.org

Camshaft Chain Tensioners

Camshaft Chain Tensioner Removal

CAUTION

Do not turn over the crankshaft while the tensioner is removed. This could upset the camshaft chain timing, and damage the valves.

Front Camshaft Chain Tensioner

- Remove the alternator rotor (see Alternator Rotor Removal in the Electrical System chapter).
- Push the camshaft chain while pushing the stopper [A] to push the push rod [B] into the interior of tensioner body [C].
- Insert the suitable pin into the hole [D] to hold the rod in place.

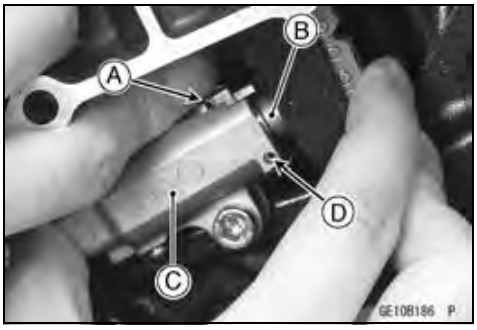

- Remove:
  Camshaft Chain Tensioner Bolts [A]
  Camshaft Chain Tensioner [B]

○After removing the chain tensioner, do not remove the pin [C].

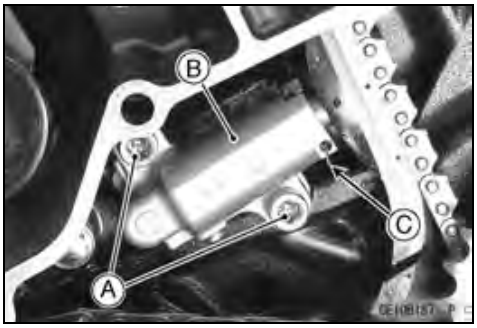

Rear Camshaft Chain Tensioner

- Remove:
  Clutch Cover (see Clutch Cover Removal in the Clutch chapter)
  Upper Primary Chain Guide (see Clutch Removal in the Clutch chapter)
- Push the camshaft chain while pushing the stopper [A] to push the push rod [B] into the interior of tensioner body [C].
- Insert the suitable pin into the hole [D] to hold the rod in place.

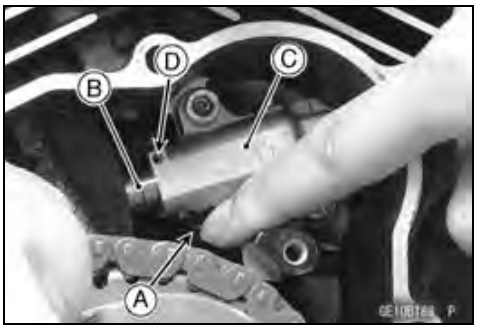

- Remove:
  Camshaft Chain Tensioner Bolts [A]
  Camshaft Chain Tensioner [B]

○After removing the chain tensioner, do not remove the pin [C].

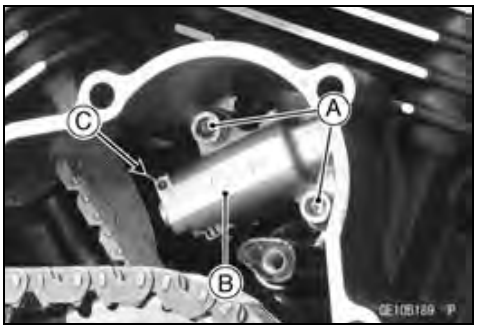

Downloaded from www.vulcanriders-sweden.org

Camshaft Chain Tensioners

Camshaft Chain Tensioner Installation

★If the pin was removed, install it as follows.

○Push the push rod [A] into the interior of tensioner body [B] while pushing the stopper [C].

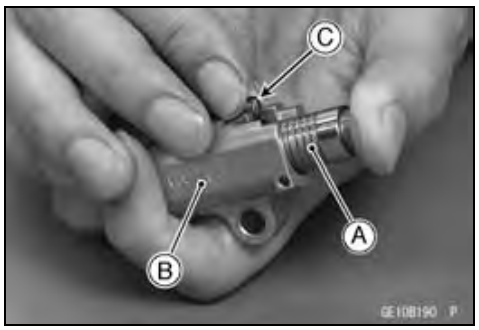

CAUTION
Be careful the oil remaining in the tensioner body dashes out.

○Insert the suitable pin [A] into the hole [B] to hold the rod in place.

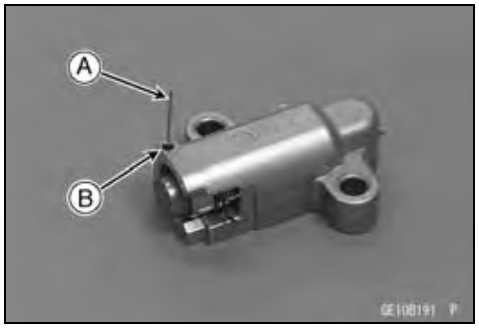

● Apply a non-permanent locking agent to the threads of the camshaft chain tensioner bolts [A], and tighten them.

Torque - Camshaft Chain Tensioner Bolts : 12 N·m (1.2 kgf·m, 106 in·lb)

● After tightening the camshaft chain tensioner bolts, pull out the pin [B] from the tensioner body to free the push rod.

○Push the push rod (camshaft chain) to pull out the pin.

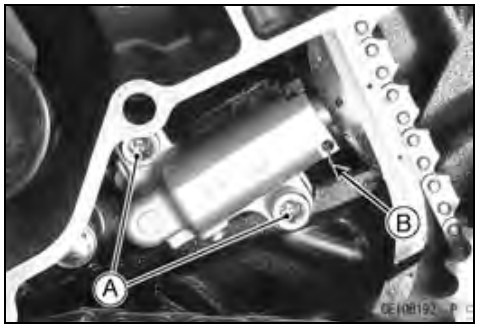

Downloaded from www.vulcanriders-sweden.org

Camshafts, Camshaft Chains, Camshaft Sprockets

Camshaft Removal

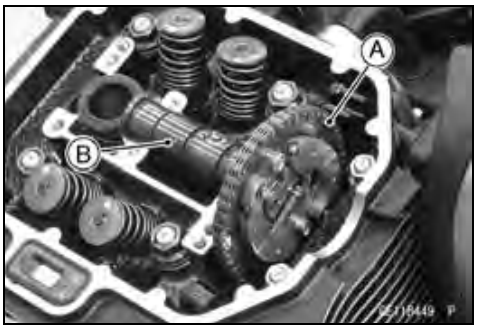

NOTE

○*The front and rear camshaft removal are same procedures.*

- Remove:
  Engine (see Engine Removal in the Engine Removal/Installation chapter)
  Rocker Case (see Rocker Case Removal)
- Disengage the camshaft chain [A] from the camshaft sprocket, and remove the camshaft [B].
- Support the camshaft chain using a suitable tool.

CAUTION

The crankshaft may be turned while the camshaft is removed. Always pull the chain taut while turning the crankshaft. This avoids kinking the chain on the lower (crankshaft) sprocket. A kinked chain could damage both the chain and the sprocket.

Camshaft Installation

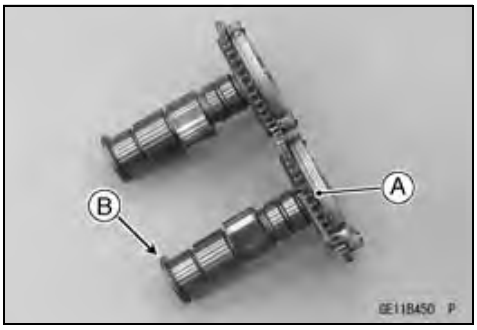

NOTE

○*The front and rear camshafts are different. The rear camshaft [A] has a groove [B] for identification. Be careful not to mix up these shafts.*

- Apply molybdenum disulfide oil solution to all cam parts and journals.

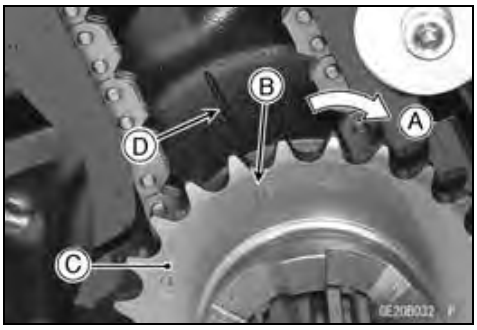

- First, install the front camshaft as follows.

○Install the alternator bolt together with the washer on the crankshaft temporarily (see Rocker Case Removal).

○Using a wrench on the alternator rotor bolt, turn the crankshaft clockwise [A] until the “F” mark line (TDC mark for front piston) [B] of the balancer chain sprocket [C] is aligned with the line [D] of the crankcase.

CAUTION

The crankshaft may be turned while the camshaft is removed. Always pull the chain taut while turning the crankshaft. This avoids kinking the chain on the lower (crankshaft) sprocket. A kinked chain could damage both the chain and the sprocket.

Downloaded from www.vulcanriders-sweden.org

Camshafts, Camshaft Chains, Camshaft Sprockets

★If the rear camshaft chain guide [A] was removed, be sure to install it first.

Torque - Rear Camshaft Chain Guide Retainer Bolt : 9.8 N·m (1.0 kgf·m, 87 in·lb)

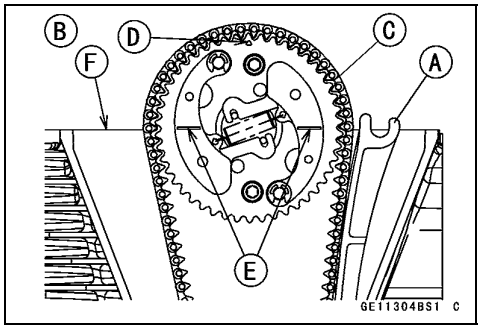

Left Side View [B]

○Pull the tension side (inlet side) [C] of the chain taut to install the chain.

○Face the "△" mark [D] of the sprocket upward.

○Engage the camshaft chain with the sprocket so that the timing marks [E] on the weights are aligned with the cylinder head upper surface [F].

○Install:
Front Rocker Case (see Rocker Case Removal)
Front Camshaft Chain Tensioner (see Camshaft Chain Tensioner Installation)

○After installing the above parts, check to be sure that the front camshaft chain timing is correct.

● Next, install the rear camshaft as follows.

○Using a wrench on the alternator rotor bolt, turn the crankshaft clockwise [A] by one rotation (360° turn from the front piston TDC), and then turn the crankshaft clockwise (52° turn from the front piston TDC) until the "R" mark line (TDC mark for rear piston) [B] of the balancer chain sprocket [C] is aligned with the line [D] of the crankcase.

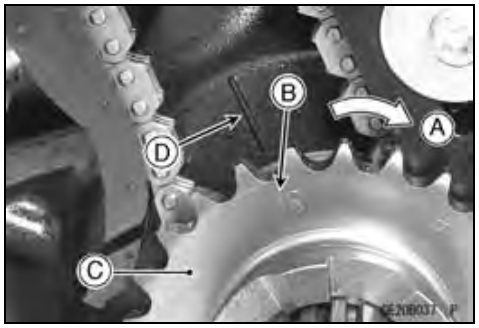

CAUTION

The crankshaft may be turned while the camshaft is removed. Always pull the chain taut while turning the crankshaft. This avoids kinking the chain on the lower (crankshaft) sprocket. A kinked chain could damage both the chain and the sprocket.

★If the rear camshaft chain guide [A] was removed, be sure to install it first.

Torque - Rear Camshaft Chain Guide Retainer Bolt : 9.8 N·m (1.0 kgf·m, 87 in·lb)

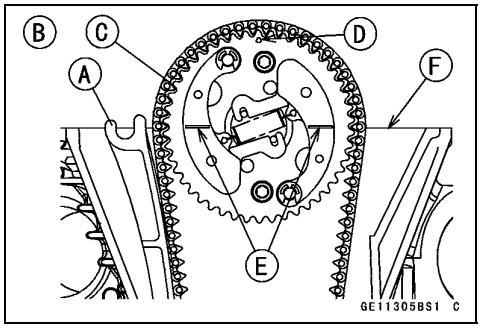

Right Side View [B]

○Pull the tension side (exhaust side) [C] of the chain taut to install the chain.

○Face the "△" mark [D] of the sprocket upward.

○Engage the camshaft chain with the sprocket so that the timing marks [E] on the weights are aligned with the cylinder head upper surface [F].

○Install:
Rear Rocker Case (see Rocker Case Removal)
Rear Camshaft Chain Tensioner (see Camshaft Chain Tensioner Installation)

○After installing the above parts, check to be sure that the rear camshaft chain timing is correct.

○Turn the crankshaft clockwise and recheck the front/rear camshaft chain timing.

Downloaded from www.vulcanriders-sweden.org

Camshafts, Camshaft Chains, Camshaft Sprockets

Camshaft, Rocker Case Wear

- Remove the rocker cases (see Rocker Case Removal).
- Cut strips of plastigage to journal width. Place a strip on each journal parallel to the camshaft installed in the correct position.
- Measure each clearance between the camshaft journal and the rocker case using plastigage (press gauge).
- Tighten the rocker case bolts to the specified torque (see Rocker Case Installation).

NOTE

○*Do not turn the camshaft when the plastigage is between the journal and rocker case.*

- Remove the rocker case again, and measure the plastigage width [A] to determine the clearance between each journal and the rocker case. Measure the maximum plastigage width.



Camshaft Journal/Rocker Case Clearance
Standard: 0.020 ~ 0.062 mm (0.0008 ~ 0.0024 in.)
Service Limit: 0.15 mm (0.0059 in.)

★If any clearance exceeds the service limit, measure the diameter of each camshaft journal with a micrometer.

Camshaft Journal Diameter
Standard: 25.959 ~ 25.980 mm (1.0220 ~ 1.0228 in.)
Service Limit: 25.93 mm (1.021 in.)

★If the camshaft journal diameter is less than the service limit, replace the camshaft with a new one and measure the clearance again.
★If the clearance still remains out of the limit, replace the rocker case and cylinder head as a set.

CAUTION

The rocker case and cylinder head are machined in the assembled state, so they must be replaced as a set.

Camshaft Runout

- Remove the camshaft (see Camshaft Removal).
- Set the camshaft in a camshaft alignment jig or on V blocks.
- Measure runout with a dial gauge at the specified place as shown in the figure.

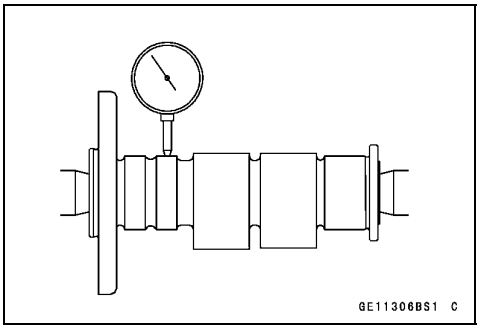

★If the runout exceeds the service limit, replace the shaft.

Camshaft Runout
Standard: TIR 0.02 mm (0.0008 in.) or less
Service Limit: TIR 0.1 mm (0.004 in.)

Downloaded from www.vulcanriders-sweden.org

Camshafts, Camshaft Chains, Camshaft Sprockets

Cam Wear

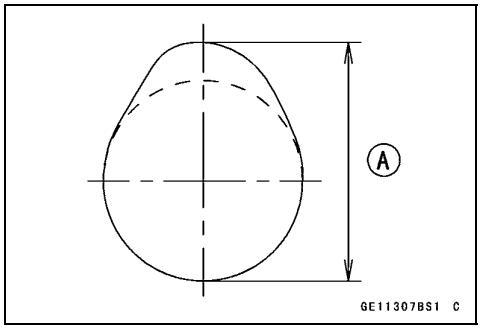

- Remove the camshaft (see Camshaft Removal).
- Measure the height [A] of each cam with a micrometer.

★If the cams are worn down past the service limit, replace the camshaft.

Cam Height
Standard:
Exhaust **34.422 ~ 34.536 mm (1.3552 ~ 1.3597 in.)**
Inlet **34.407 ~ 34.521 mm (1.3546 ~ 1.3591 in.)**
Service Limit:
Exhaust **34.32 mm (1.351 in.)**
Inlet **34.31 mm (1.350 in.)**

Camshaft Chain Removal

Front Camshaft Chain

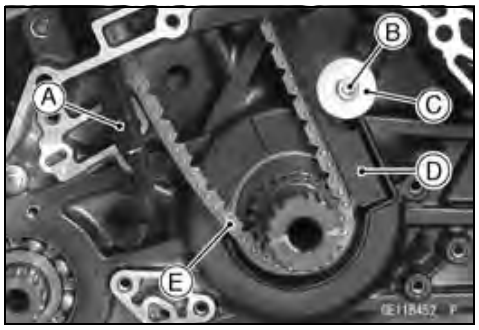

- Remove:
  Front Camshaft (see Camshaft Removal)
  Balancer Chain Sprocket (see Balancer Mechanism Removal in the Crankshaft/Transmission chapter)
  Front Camshaft Chain Guide [A]
  Rear Camshaft Chain Guide Retainer Bolt [B] with Retainer [C]
  Rear Camshaft Chain Guide [D]
- Remove the front camshaft chain [E] from the crankshaft sprocket, and then pull out the chain to downward.

Rear Camshaft Chain

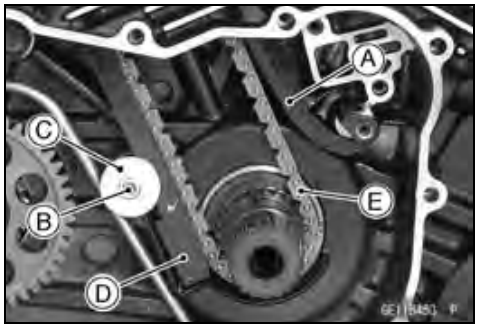

- Remove:
  Rear Camshaft (see Camshaft Removal)
  Damper Cam Sprocket (see Clutch Removal in the Clutch chapter)
  Front Camshaft Chain Guide [A]
  Rear Camshaft Chain Guide Retainer Bolt [B] with Retainer [C]
  Rear Camshaft Chain Guide [D]
- Remove the front camshaft chain [E] from the crankshaft sprocket, and then pull out the chain to downward.

Camshaft Chain Installation

- Installation is reverse of removal, note the following.

○Tighten:

Torque - Rear Camshaft Chain Guide Retainer Bolt : 9.8 N·m (1.0 kgf·m, 87 in·lb)

Camshaft Sprocket Removal

NOTE

○*The front and rear camshaft sprocket removal are same procedures.*

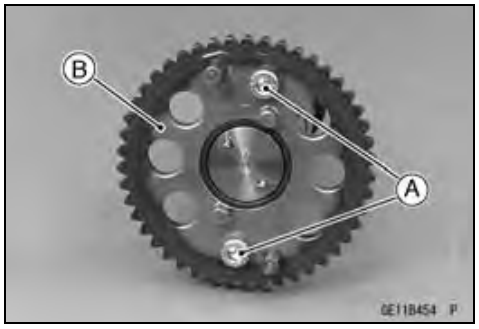

- Remove:
  Camshaft (see Camshaft Removal)
  Weights of KACR (see KACR Removal)
  Camshaft Sprocket Bolts [A]
  Camshaft Sprocket [B]

Downloaded from www.vulcanriders-sweden.org

Camshafts, Camshaft Chains, Camshaft Sprockets

Camshaft Sprocket Installation

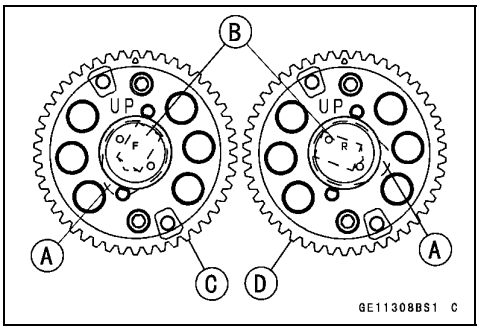

- Install the camshaft sprockets as shown in the figure.
  Exhaust Cam Positions [A]
  Push Rods of KACR [B]
  Front Camshaft Sprocket [C]
  Rear Camshaft Sprocket [D]

○The front and rear camshaft sprockets are identical.

- Apply a non-permanent locking agent to the threads of the camshaft sprocket bolts, and tighten them.

Torque - Camshaft Sprocket Bolts : 15 N·m (1.5 kgf·m, 11 ft·lb)

Downloaded from www.vulcanriders-sweden.org

KACR (Kawasaki Automatic Compression Release)

KACR Inspection

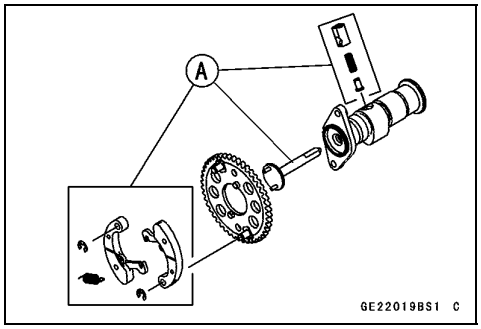

The KACR (Kawasaki Automatic Compression Release) momentarily opens the exhaust valves on the compression stroke at very low speeds. In this model, the KACR is operated at 400 ~ 500 r/min (rpm). This allows some of the compression pressure to escape, making it easy to turn over the engine during starting.

Due to the simplicity of the mechanism, no periodic maintenance is needed. There are only two symptoms of problems with the KACR mechanism [A]: compression is not released during starting, and compression is released during running.

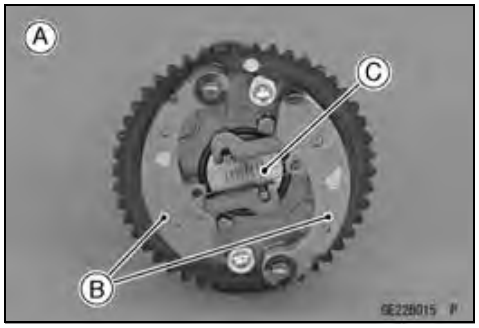

(1) If compression is not released during starting, the weights are not returning to their rest position.

- Remove the camshaft (see Camshaft Removal).
- Visually inspect the spring.

★If damaged, deformed, or missing, replace the spring.

- Remove the spring and move the weights back and forth.

★If the weights do not move smoothly, replace the KACR parts as a set. Also inspect the exhaust rocker arm for any damage, and replace the rocker arm if necessary.

[A] Rest Position (compression is released) [A]
Weights [B]
Spring [C]

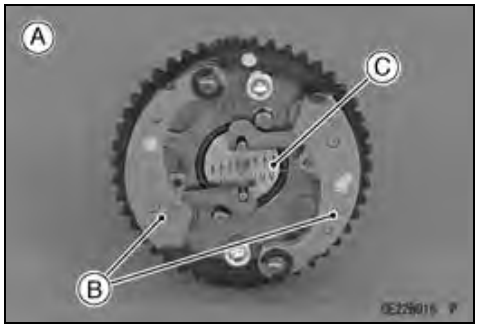

(2) If compression is released while the engine is running, the weights are not swinging out.

- Remove the spring and move the weights back and forth.

★If the weights do not move easily from the retracted position, replace the KACR parts as a set. Also inspect the exhaust rocker arm for any damage, and replace the rocker arm if necessary.

Running Position (compression is not released) [A]
Weights [B]
Spring [C]

KACR Removal

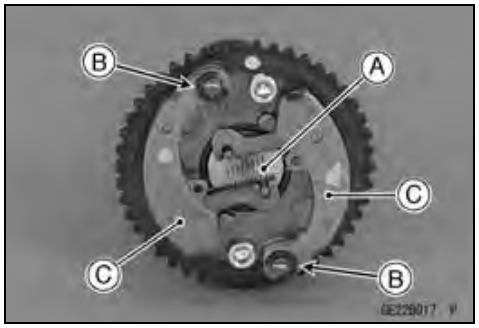

NOTE

○*The front and rear KACR removal are same procedures.*

- Remove:

Camshaft (see Camshaft Removal)
Spring [A]
Circlips [B]
Weights [C]

Downloaded from www.vulcanriders-sweden.org

KACR (Kawasaki Automatic Compression Release)

● Insert the suitable wire [A] into the hole of the push rod [B] to hold it in place.

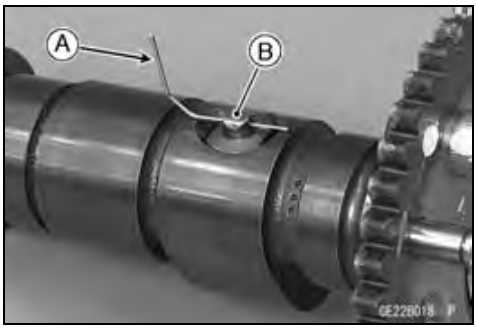

● Pull out the shaft [A] from the camshaft, and then remove the push rod [B].
○After removing the push rod, do not remove the wire [C].

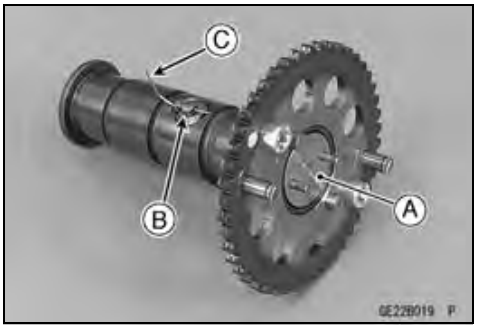

KACR Installation

★If the wire was removed, install it as follows.
○Assemble the following parts.
Holder [A]
Spring [B]
Push Rod [C]

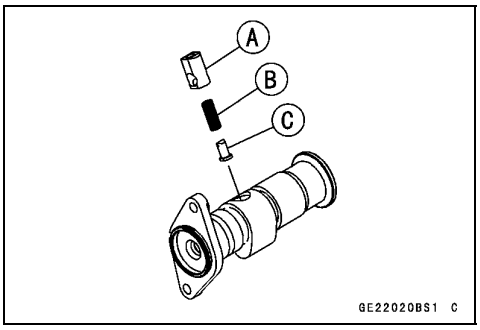

○Push the push rod [A] using a suitable bar from the hole [B] of the holder bottom.
○Insert the suitable wire [C] into the hole of the push rod to hold it in place.

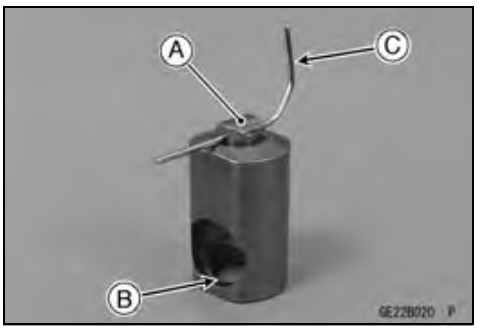

NOTE

○*The front KACR shaft has a "F" mark [A] and the rear KACR shaft has a "R" mark [B]. Be careful not to mix up these shafts.*

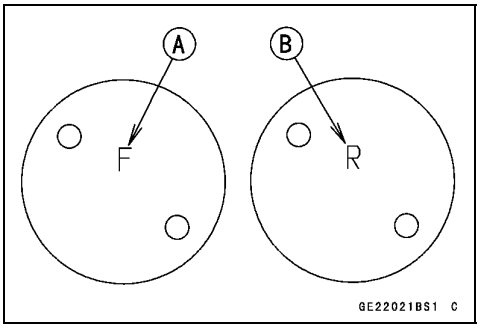

Downloaded from www.vulcanriders-sweden.org

KACR (Kawasaki Automatic Compression Release)

● Install the push rod [A], and then insert the shaft [B] to the camshaft.
● Pull out the wire [C] from the hole of the push rod.

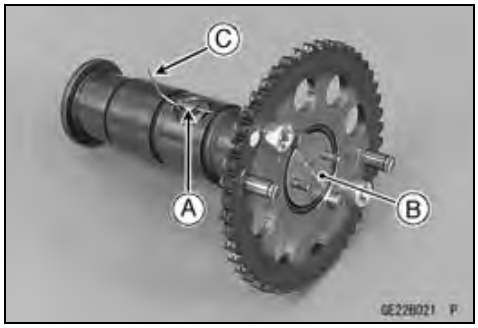

● For front KACR, set the shaft so that the "F" mark [A] is aligned with the "△" mark [B] of the camshaft sprocket as shown in the figure.

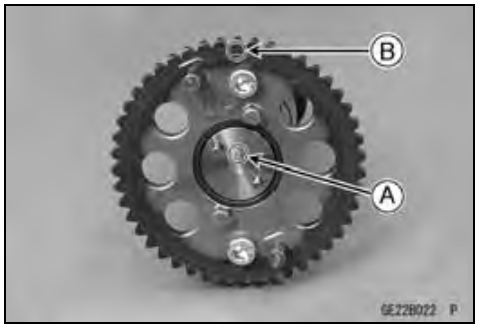

● For rear KACR, set the shaft so that the "R" mark [A] is aligned with the "△" mark [B] of the camshaft sprocket as shown in the figure.

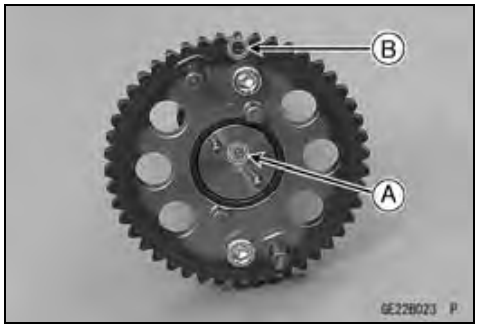

● Install the weight on the camshaft sprocket.
○Hook the arms [A] on the pins of the KACR shaft.
○The weights are identical.
● Replace the circlips [B] with new ones, and install them.
● Hook the spring [C] from the outside with the open side of the hook inwards.

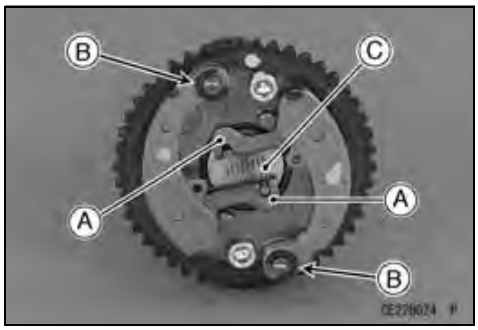

● After installing the KACR, check that the KACR is operated correctly as follows.
○First, pull the weights [A] to outside [B] by hand and check that the push rod [C] is pulled to inside [D].
★If the operation of the KACR is different, reinstall it.

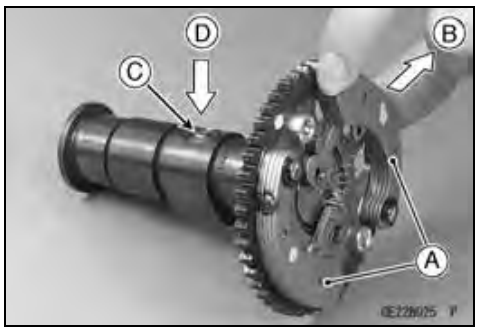

Downloaded from www.vulcanriders-sweden.org

KACR (Kawasaki Automatic Compression Release)

○Next, release the hand from the weights [A], and check that the weights and push rod [B] are returned to original position.
○When releasing the hand from the weights, the push rod must be pushed out [C].
★If the operation of the KACR is different, reinstall it.

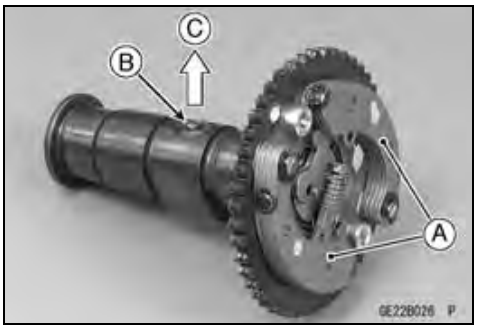

Downloaded from www.vulcanriders-sweden.org

Cylinder Heads

Cylinder Compression Measurement

NOTE

○*Use the battery which is fully charged.*

- Warm up the engine thoroughly.
- Stop the engine.
- Remove spark plugs (see Spark Plug Replacement in the Periodic Maintenance chapter).

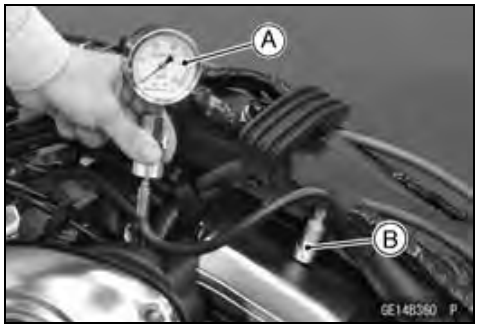

- Attach the compression gauge [A] and adapter [B] firmly into the spark plug hole.

○Using the starter motor, turn the engine over with the throttle fully open until the compression gauge stops rising; the compression is the highest reading obtainable.

Special Tools - Compression Gauge, 20 kgf/cm²: 57001-221
Compression Gauge Adapter, M12 × 1.25: 57001-1733

Cylinder Compression
Usable Range: 420 ~ 698 kPa (4.3 ~ 7.1 kgf/cm², 61 ~ 101 psi) at 300 r/min (rpm)

- Repeat the measurement for the other cylinder.
- Install the spark plugs (see Spark Plug Replacement in the Periodic Maintenance chapter).

The following table should be consulted if the obtainable compression reading is not within the usable range.

Problem	Diagnosis	Remedy (Action)
Cylinder compression is higher than usable range	Carbon accumulation on piston and in combustion chamber possibly due to damaged valve stem oil seal and/or damaged piston oil rings (This may be indicated by white exhaust smoke.)	Remove the carbon deposits and replace damaged parts if necessary.
	Incorrect cylinder head gasket thickness	Replace the gasket with a standard part.
	Damaged or missing KACR spring	Replace the KACR spring.
	KACR weights do not move smoothly.	Replace the KACR.
Cylinder compression is lower than usable range	Gas leakage around cylinder head	Replace damaged gasket and check cylinder head warp.
	Bad condition of valve seating	Repair if necessary.
	HLA seizure	Replace the HLA.
	Incorrect piston/cylinder clearance	Replace the piston and/or cylinder.
	Piston seizure	Inspect the cylinder and replace/repair the cylinder and/or piston as necessary.
	Bad condition of piston ring and/or piston ring grooves	Replace the piston and/or the piston rings.
	KACR weights do not move smoothly.	Replace the KACR.

Downloaded from www.vulcanriders-sweden.org

Cylinder Heads

Cylinder Head Removal



NOTE

○*The front and rear cylinder head removal are same procedures.*

● Remove:
Camshaft (see Camshaft Removal)
Front Camshaft Chain Guide [A]
Rear Camshaft Chain Guide Retainer Bolt [B] with Retainer [C]
Rear Camshaft Chain Guide [D]

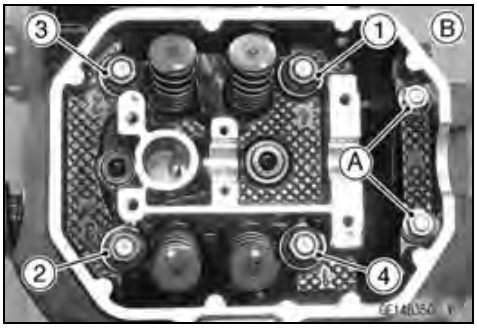

● Remove the cylinder head nuts, following the specified sequence.
○First, loosen the M10 nuts [A].
○Next, loosen the M12 nuts as shown sequence [1 ~ 4] in the figure.
Front Cylinder Head [B]
Rear Cylinder Head [C]
● Remove the cylinder head.

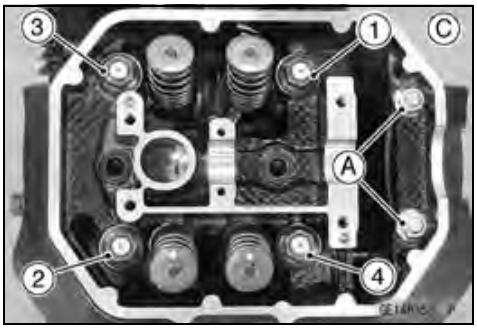

Cylinder Head Installation



NOTE

○*The rocker case is machined with the cylinder head, so if a new cylinder head is installed, use the case that is supplied with the new head.*

● Replace the O-rings [A] of the upper oil pipe with new ones.
● Apply grease to the new O-rings.

Downloaded from www.vulcanriders-sweden.org

Cylinder Heads

NOTE

○*The front cylinder head gasket has a "F" mark [A] and the rear cylinder head gasket has a "R" mark [B]. Be careful not to mix up these gaskets.*

● Replace the cylinder head gasket with a new one, and install it.

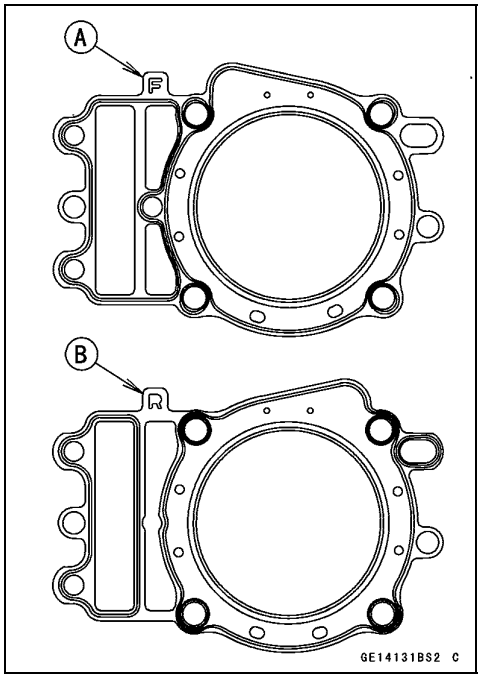

● Install the dowel pins [A].



NOTE

○*The front cylinder head has a "F" mark [A] and the rear cylinder head has a "R" mark [B]. Be careful not to mix up these heads.*

● Install the cylinder head.

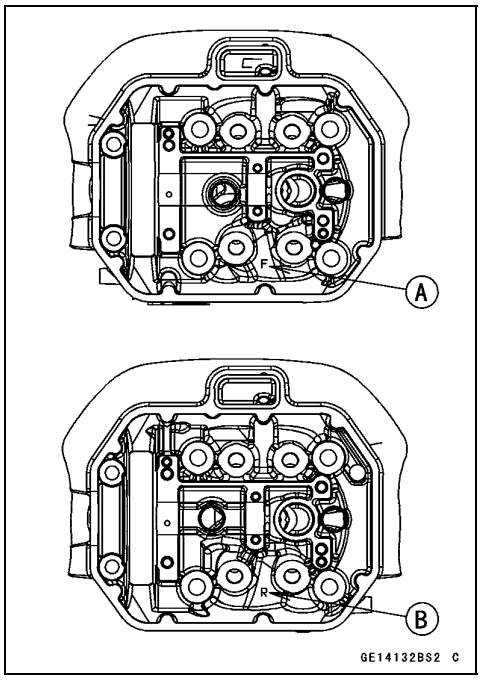

Downloaded from www.vulcanriders-sweden.org

Cylinder Heads

● Apply molybdenum disulfide oil solution to the following portions.
Threads of M10 Cylinder Head Nuts [A]
Threads of M12 Cylinder Head Nuts [B]
Both Sides of Washers [C]

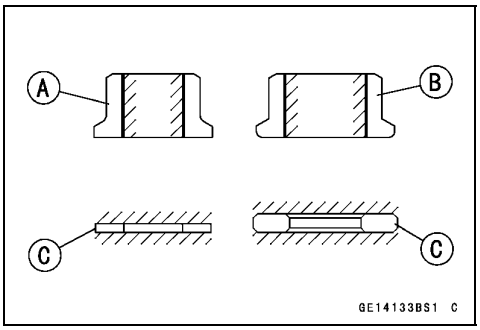

● Tighten the cylinder head nuts using the following steps.
○First, following the sequence numbers [1 ~ 4] on the cylinder head, tighten the M12 cylinder head nuts [A].

Torque - Cylinder Head Nuts (M12)
First: 39 N·m (4.0 kgf·m, 29 ft·lb)
Final (New Nuts): 70 N·m (7.1 kgf·m, 52 ft·lb)
Final (Used Nuts): 77 N·m (7.8 kgf·m, 57 ft·lb)

○Next, tighten the M10 cylinder head nuts [B].

Torque - Cylinder Head Nuts (M10)
First: 20 N·m (2.0 kgf·m, 15 ft·lb)
Final: 39 N·m (4.0 kgf·m, 29 ft·lb)

Front Cylinder Head [C]
Rear Cylinder Head [D]

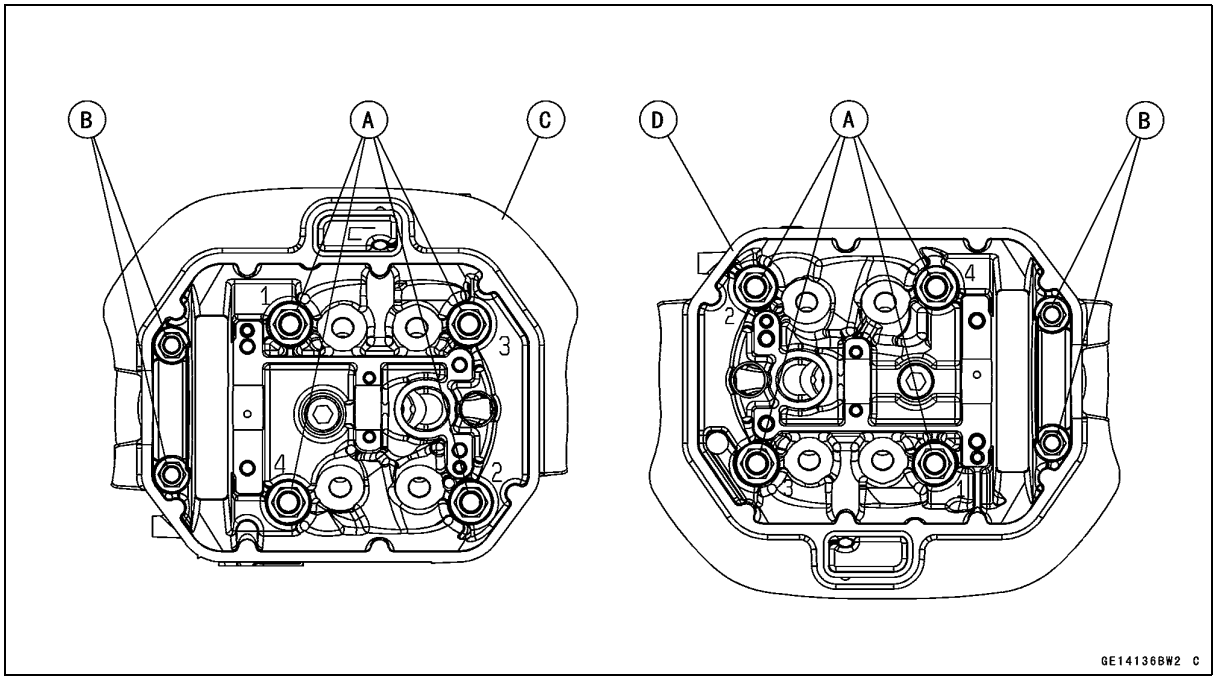

● Install the front and rear camshaft chain guides.
● Tighten:

Torque - Rear Camshaft Chain Guide Retainer Bolt : 9.8 N·m (1.0 kgf·m, 87 in·lb)

Downloaded from www.vulcanriders-sweden.org

Cylinder Heads

Cylinder Head Warp

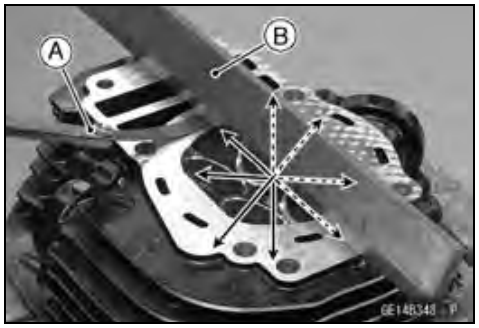

- Clean the cylinder head.
- Lay a straightedge across the lower surface of the cylinder head at several positions.
- Use a thickness gauge [A] to measure the space between the straightedge [B] and the head.

Cylinder Head Warp

Standard: – – –

Service Limit: 0.05 mm (0.002 in.)

★If the cylinder head is warped more than the service limit, replace it.

★If the cylinder head is warped less than the service limit, repair the head by rubbing the lower surface on emery paper secured to a surface plate (first No. 200, then No. 400).

Downloaded from www.vulcanriders-sweden.org

Valves

Valve Clearance Inspection/Adjustment

NOTE

○*Since the HLA (hydraulic lash adjuster) constantly maintain zero clearance, it is not necessary to inspect or adjust the valve clearance.*

Valve Removal

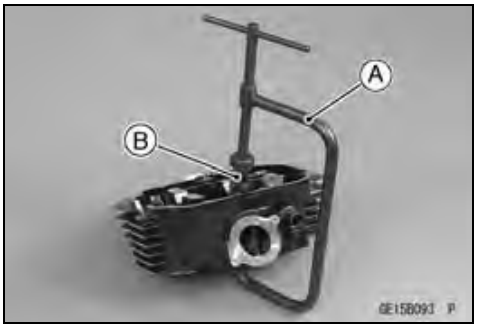

- Remove the cylinder head (see Cylinder Head Removal).
- Using the valve spring compressor assembly, remove the valve.

Special Tools - Valve Spring Compressor Assembly [A]: 57001-241
Valve Spring Compressor Adapter, ϕ28.2 [B]: 57001-243

Valve Installation

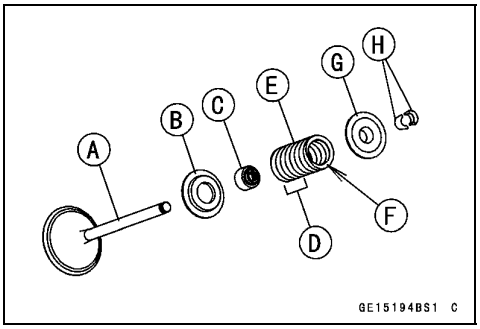

- Replace the oil seal with a new one.
- Apply a thin coat of molybdenum disulfide grease to the valve stem before valve installation.
- Install the springs so that the closed coil end faces downwards (the side painted in white faces upwards).

Valve Stem [A]
Oil Seal [B]
Spring Seat [C]
Closed Coil End [D]
Valve Spring [E]
Side Painted in White [F]
Retainer [G]
Split Keepers [H]

Valve Guide Removal

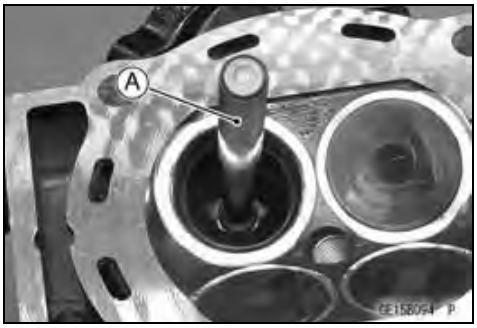

- Remove:

Valve (see Valve Removal)
Oil Seal
Spring Seat

- Heat the area around the valve guide to 120 ~ 150°C (248 ~ 302°F), and hammer lightly on the valve guide arbor [A] to remove the guide from the top of the head.

CAUTION

Do not heat the cylinder head with a torch. This will warp the cylinder head. Soak the cylinder head in oil and heat the oil.

Special Tool - Valve Guide Arbor, ϕ5.5: 57001-1021

Downloaded from www.vulcanriders-sweden.org

Valves

Valve Guide Installation

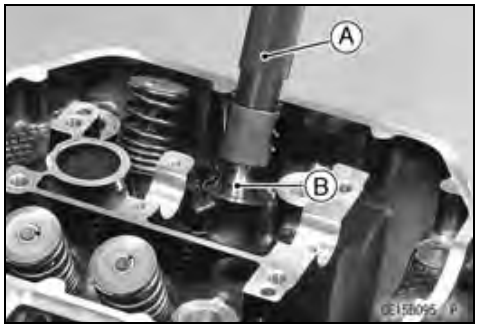

- Apply oil to the valve guide outer surface before installation.
- Heat the area around the valve guide hole to about 120 ~ 150°C (248 ~ 302°F).

CAUTION

Do not heat the cylinder head with a torch. This will warp the cylinder head. Soak the cylinder head in oil and heat the oil.

- Using the valve guide driver [A], press and insert the valve guide [B] in until its snap ring touches the head surface.

Special Tool - Valve Guide Driver: 57001-1564



- Wait until the cylinder head cools down and then ream the valve guide with the valve guide reamer [A] even if the old guide is reused.

○Turn the reamer in a clockwaise direction until the reamer turns freely in the guide. Never turn the reamer counterclockwise or it will be dulled.

○Once the guides are reamed they must be cleaned thoroughly.

Special Tool - Valve Guide Reamer, ϕ6: 57001-1596

Valve-to-Guide Clearance Measurement (Wobble Method)

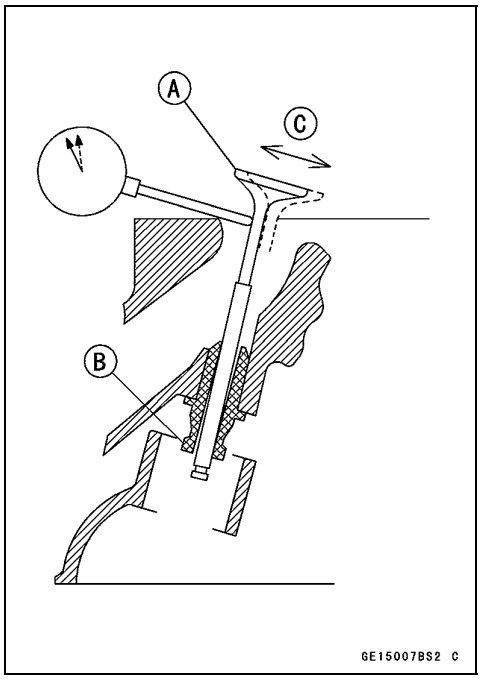

If a small bore gauge is not available, inspect the valve guide wear by measuring the valve to valve guide clearance with the wobble method as indicated below.

- Insert a new valve [A] into the guide [B] and set a dial gauge against the stem perpendicular to it as close as possible to the cylinder head mating surface.
- Move the stem back and forth [C] to measure valve/valve guide clearance.
- Repeat the measurement in a direction at a right angle to the first.

★If the reading exceeds the service limit, replace the guide.

NOTE

○*The reading is not actual valve/valve guide clearance because the measuring point is above the guide.*

Valve/Valve Guide Clearance (Wobble Method)

Standard:	
Exhaust	**0.07 ~ 0.14 mm (0.0028 ~ 0.0055 in.)**
Inlet	**0.04 ~ 0.10 mm (0.0016 ~ 0.0039 in.)**
Service Limit:	
Exhaust	**0.30 mm (0.012 in.)**
Inlet	**0.25 mm (0.010 in.)**

Downloaded from www.vulcanriders-sweden.org

Valves

Valve Seat Inspection

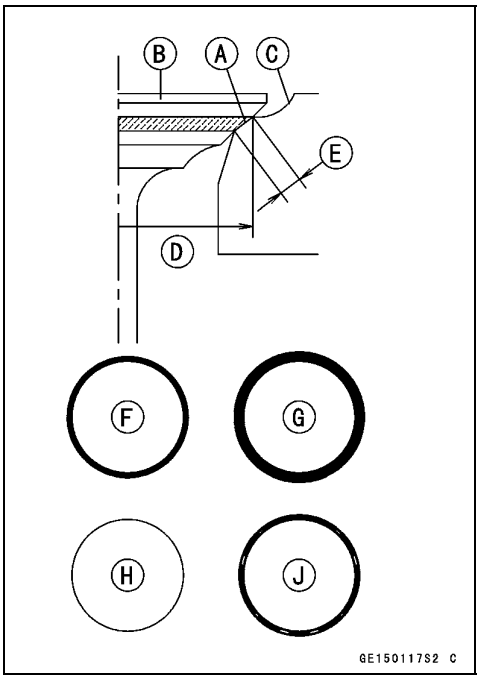

- Remove the valve (see Valve Removal).
- Check the valve seating surface [A] between the valve [B] and valve seat [C].

○Measure the outside diameter [D] of the seating pattern on the valve seat.

★If the outside diameter is too large or too small, repair the seat (see Valve Seat Repair).

Valve Seating Surface Outside Diameter
Standard:

Exhaust	**34.9 ~ 35.1 mm (1.374 ~ 1.382 in.)**
Inlet	**38.9 ~ 39.1 mm (1.531 ~ 1.539 in.)**

○Measure the seat width [E] of the portion where there is no build-up carbon (white portion) of the valve seat with a vernier caliper.
Good [F]

★If the width is too wide [G], too narrow [H] or uneven [J], repair the seat (see Valve Seat Repair).

Valve Seating Surface Width
Standard:

Exhaust	**0.8 ~ 1.2 mm (0.031 ~ 0.047 in.)**
Inlet	**0.8 ~ 1.2 mm (0.031 ~ 0.047 in.)**

Valve Seat Repair

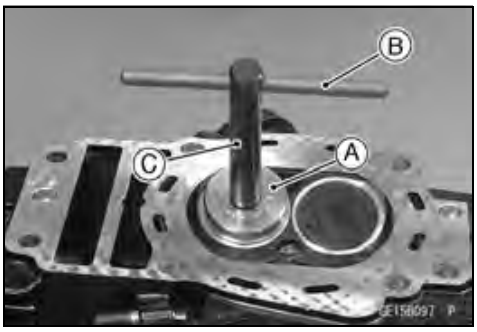

- Repair the valve seat with the valve seat cutters [A].

Special Tools -

Valve Seat Cutter Holder Bar [B]: 57001-1128
Valve Seat Cutter Holder, ϕ6 [C]: 57001-1576
[For Exhaust Valve Seat]
Valve Seat Cutter, 45° - ϕ40: 57001-1496
Valve Seat Cutter, 32° - ϕ38.5: 57001-1122
Valve Seat Cutter, 55° - ϕ38.5: 57001-1497
[For Inlet Valve Seat]
Valve Seat Cutter, 45° - ϕ41.5: 57001-1117
Valve Seat Cutter, 32° - ϕ44: 57001-1515
Valve Seat Cutter, 60° - ϕ41: 57001-1124

★If the manufacturer's instructions are not available, use the following procedure.

Downloaded from www.vulcanriders-sweden.org

Valves

Seat Cutter Operation Care

1. This valve seat cutter is developed to grind the valve for repair. Therefore the cutter must not be used for other purposes than seat repair.
2. Do not drop or shock the valve seat cutter, or the diamond particles may fall off.
3. Do not fail to apply engine oil to the valve seat cutter before grinding the seat surface. Also wash off ground particles sticking to the cutter with washing oil.

NOTE

○*Do not use a wire brush to remove the metal particles from the cutter. It will take off the diamond particles.*

4. Setting the valve seat cutter holder in position, operate the cutter in one hand. Do not apply too much force to the diamond portion.

NOTE

○*Prior to grinding, apply engine oil to the cutter and during the operation, wash off any ground particles sticking to the cutter with washing oil.*

5. After use, wash it with washing oil and apply thin layer of engine oil before storing.

Marks Stamped on the Cutter

The marks stamped on the back of the cutter [A] represent the following.

60° ..... Cutter angle [B]

37.5ϕ ..... Outer diameter of cutter [C]

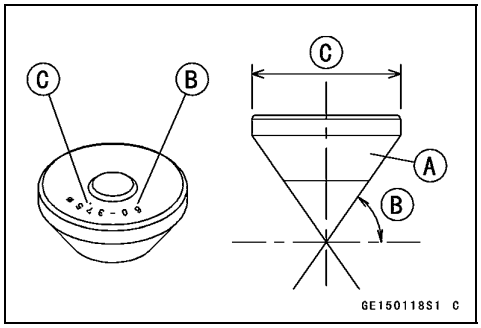

Operating Procedures

- Clean the seat area carefully.
- Coat the seat with machinist's dye.
- Fit a 45° cutter into the holder and slide it into the valve guide.
- Press down lightly on the handle and turn it right or left. Grind the seating surface only until it is smooth.

CAUTION

Do not grind the seat too much. Overgrinding will reduce valve clearance by sinking the valve into the head. If the valve sinks too far into the head, it will be impossible to adjust the clearance, and the cylinder head must be replaced.

Downloaded from www.vulcanriders-sweden.org

Valves

● Measure the outside diameter of the seating surface with a vernier caliper.

★If the outside diameter of the seating surface is too small, repeat the 45° grind until the diameter is within the specified range.

Widened Width [A] of engagement by machining with 45° cutter
Ground Volume [B] by 32° cutter
32° [C]
Correct Width [D]
Ground Volume [E] by 60° or 55° cutter
60° or 55° [F]

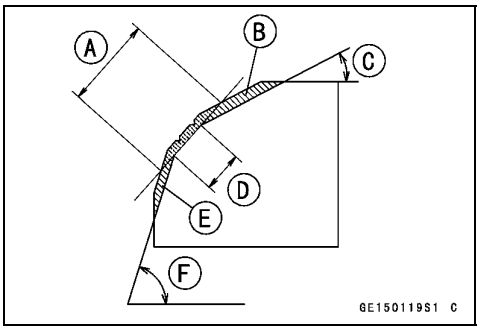

● Measure the outside diameter of the seating surface with a vernier caliper.

★If the outside diameter of the seating surface is too small, repeat the 45° grind [A] until the diameter is within the specified range.

Original Seating Surface [B]

NOTE

○*Remove all pittings of flaws from 45° ground surface.*

○*After grinding with 45° cutter, apply thin coat of machinist's dye to seating surface. This makes seating surface distinct and 32° and 60° (or 55°) grinding operation easier.*

○*When the valve guide is replaced, be sure to grind with 45° cutter for centering and good contact.*

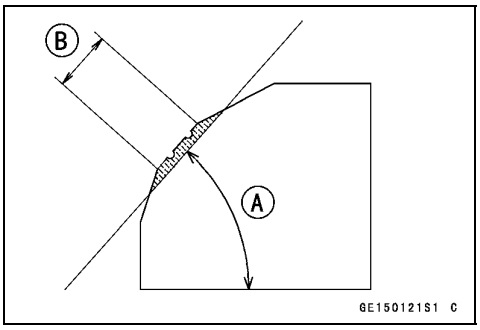

★If the outside diameter [A] of the seating surface is too large, make the 32° grind described below.

★If the outside diameter of the seating surface is within the specified range, measure the seat width as described below.

● Grind the seat at a 32° angle [B] until the seat outside diameter is within the specified range.

○To make the 32° grind, fit a 32° cutter into the holder, and slide it into the valve guide.

○Turn the holder one turn at a time while pressing down very lightly. Check the seat after each turn.

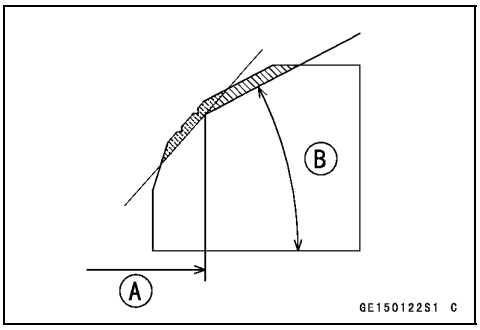

CAUTION

The 32° cutter removes material very quickly. Check the seat outside diameter frequently to prevent overgrinding.

○After making the 32° grind, return to the seat outside diameter measurement step above.

● To measure the seat width, use a vernier caliper to measure the width of the 45° angle portion of the seat at several places around the seat.

★If the seat width is too narrow, repeat the 45° grind until the seat is slightly too wide, and then return to the seat outside diameter measurement step above.

Downloaded from www.vulcanriders-sweden.org

Valves

★If the seat width is too wide, make the 60° or 55° [A] grind described below.
★If the seat width is within the specified range, lap the valve to the seat as described below.
● Grind the seat at a 60° or 55° angle until the seat width is within the specified range.
○To make the 60° or 55° grind, fit 60° or 55° cutter into the holder, and slide it into the valve guide.
○Turn the holder, while pressing down lightly.
○After making the 60° or 55° grind, return to the seat width measurement step above.
Correct Width [B]

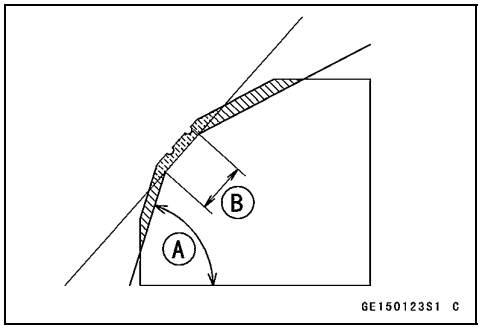

● Lap the valve to the seat, once the seat width and outside diameter are within the ranges specified above.
○Put a little coarse grinding compound on the face of the valve in a number of places around the valve head.
○Spin the valve against the seat until the grinding compound produces a smooth, matched surface on both the seat and the valve.
○Repeat the process with a fine grinding compound.
Lapper [A]
Valve Seat [B]
Valve [C]

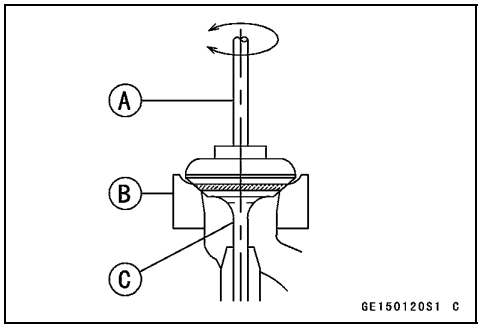

● The seating area should be marked about in the middle of the valve face.
★If the seat area is not in the right place on the valve, check to be sure the valve is the correct part. If it is, it may have been refaced too much; replace it.
● Be sure to remove all grinding compound before assembly.

Downloaded from www.vulcanriders-sweden.org

Valves

Valve Seat Repair

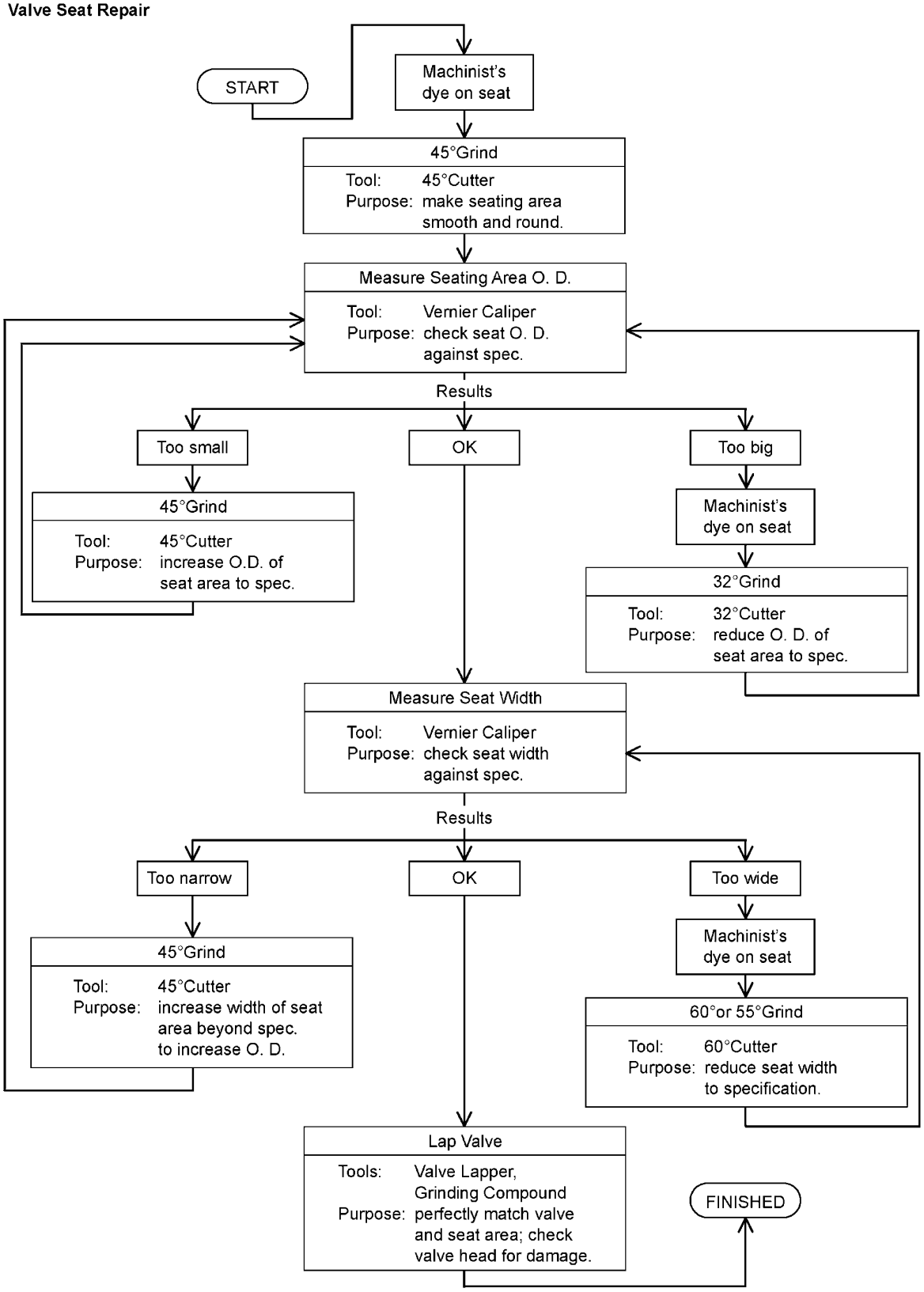

Downloaded from www.vulcanriders-sweden.org

Cylinders, Pistons

Cylinder Removal



NOTE

○*The front and rear cylinder removal are same procedures.*

● Remove:
Cylinder Head (see Cylinder Head Removal)
Upper Oil Pipe [A]
Cylinder [B]

Cylinder Installation

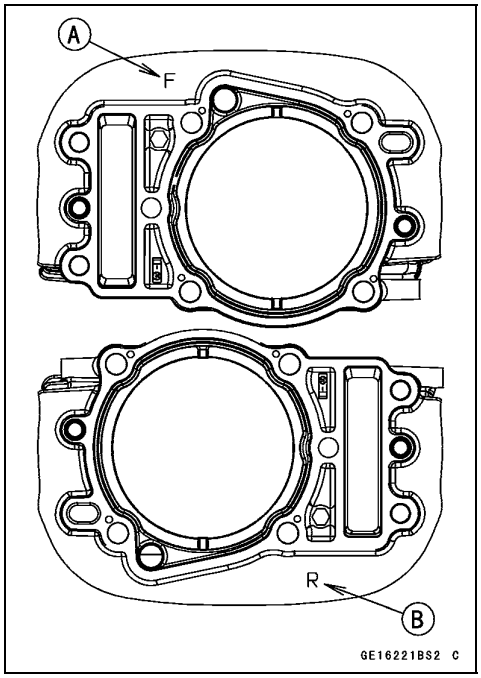

NOTE

○*If a new cylinder is used, use new piston ring.*
○*The front cylinder has a "F" mark [A] and the rear cylinder has a "R" mark [B]. Be careful not to mix up these cylinders.*

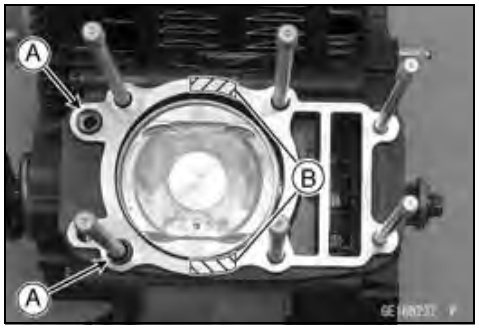

● Install the dowel pins [A].
● Apply silicone sealant to the are [B] where the mating surface of the crankcase touches the cylinder gasket.

Sealant - Kawasaki Bond (Silicone Sealant) : 92104-0004

● Replace the cylinder gasket with a new one, and install it.

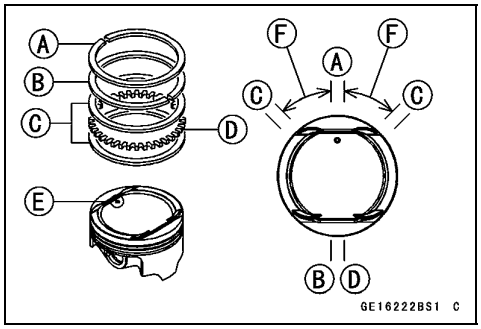

● The piston ring openings must be positioned as shown in the figure. The openings of the oil ring steel rails must be about 30 ~ 45° of angle from the opening of the top ring.
Top Ring [A]
Second Ring [B]
Oil Ring Steel Rails [C]
Oil Ring Expander [D]
Hollow [E]
30 ~ 45° [F]

Downloaded from www.vulcanriders-sweden.org

Cylinders, Pistons

- Apply molybdenum disulfide oil solution to the cylinder bore, piston rings and piston skirt.
- Using the piston ring compressor assembly [A] with the chamfered side [B] upward, install the cylinder block.
  For Front Cylinder [C]
  For Rear Cylinder [D]

Special Tools - Piston Ring Compressor Grip : 57001-1095
Piston Ring Compressor Belt, ϕ95 ~ ϕ108 : 57001-1358

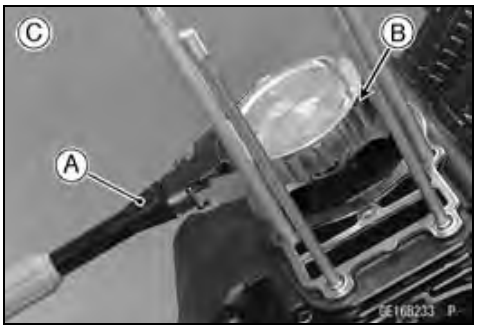



- Replace the O-rings [A] of the upper oil pipe [B] with new ones.
- Apply grease to the new O-rings, and insert the upper oil pipe to the hole of the cylinder securely.

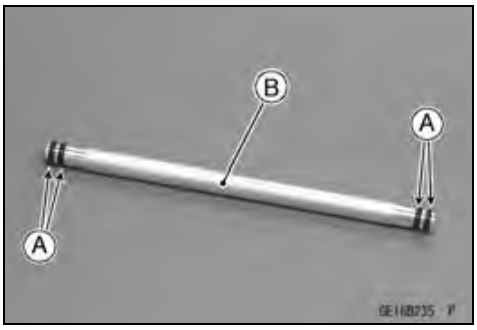

Piston Removal

NOTE

○*The front and rear piston removal are same procedures.*

- Remove the cylinder (see Cylinder Removal).
- Place a clean cloth [A] under the piston and remove the piston pin snap ring [B] from the outside.

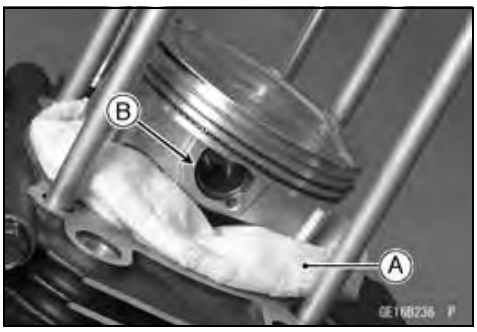

- Using the piston pin puller [A], remove the piston pin.

Special Tool - Piston Pin Puller : 57001-1568

- Remove the piston [B] from the connecting rod.



Downloaded from www.vulcanriders-sweden.org

Cylinders, Pistons

- Carefully spread the ring opening with your thumbs and then push up on the opposite side of the ring [A] to remove it.
- Remove the 3-piece oil ring with your thumbs in the same manner.

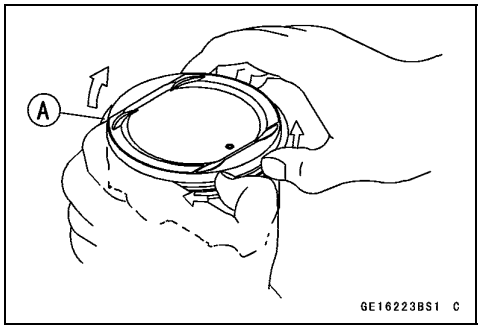

Piston Installation

NOTE

○*If a new piston is used, use new piston ring.*

- Apply molybdenum disulfide oil solution to the oil ring expander, install the oil ring expander [A] in the bottom piston ring groove so the ends [B] butt together.
- Apply molybdenum disulfide oil solution to the oil ring steel rails, and install the oil ring steel rails, one above the expander and one below it.

○Spread the rail with your thumbs, but only enough to fit the rail over the piston.

○Release the rail into the bottom piston ring groove.

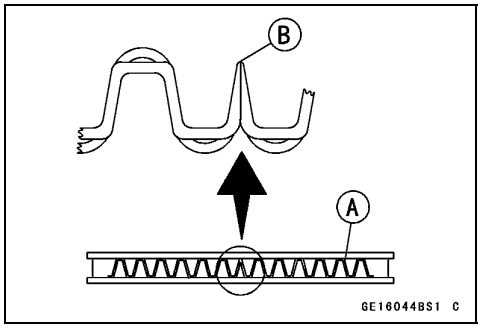

NOTE

○*The oil ring rails have no “top” or “bottom”.*

- Apply molybdenum disulfide oil solution to the top and second rings.

NOTE

○*Do not mix up the top and second ring.*

- Install the top ring [A] so that the "R" mark [B] faces up.
- Install the second ring [C] so that the "RN" mark [D] faces up.

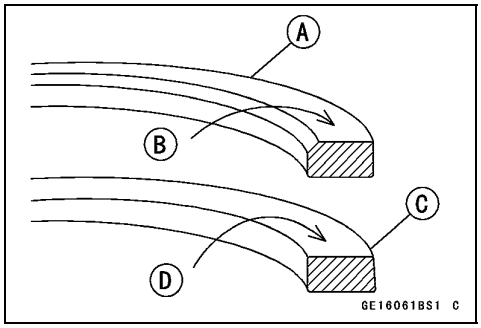

- For the front piston [A], install the piston so that the hollow [B] faces the front side (exhaust side) [C].
- For the rear piston [D], install the piston so that the hollow [E] faces the rear side (exhaust side) [F].

NOTE

○*The front and rear pistons are identical, but they should be installed in their original positions.*

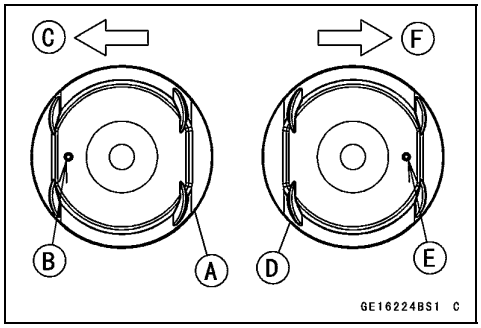

CAUTION

Incorrect installation of the piston could cause piston seizure and result in severe engine damage.

Downloaded from www.vulcanriders-sweden.org

Cylinders, Pistons

● Fit a new piston pin snap ring into the side of the piston so that the ring opening [A] does not coincide with the slit [B] of the piston pin hole.
○Apply molybdenum disulfide oil solution to the piston pin and piston skirt.
○When installing the piston pin snap ring, compress it only enough to install it and no more.

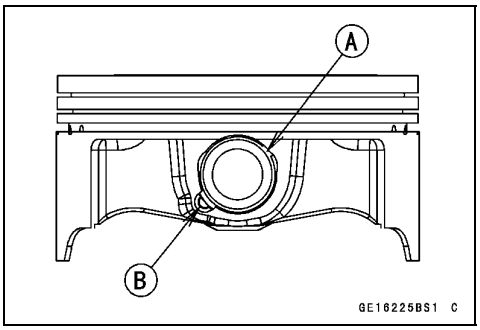

CAUTION

Do not reuse snap rings, as removal weakens and deforms them. They could fall out and score the cylinder wall.

● Install the cylinder (see Cylinder Installation).

Cylinder Wear

● Since there is a difference in cylinder wear in different directions, take a side-to-side and a front-to-back measurement at each of the three locations (total of six measurements) shown in the figure.
★If any of the cylinder inside diameter measurements exceeds the service limit, replace the cylinder.
10 mm (0.39 in.) [A]
60 mm (2.4 in.) [B]
20 mm (0.79 in.) [C]

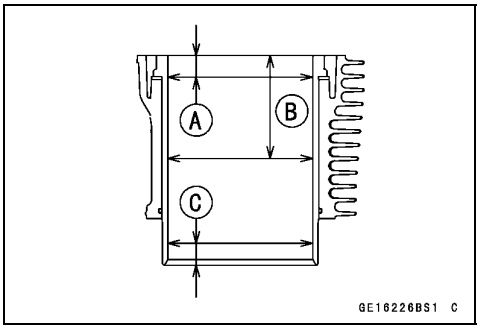

Cylinder Inside Diameter
Standard: 102.000 ~ 102.012 mm (4.0157 ~ 4.0162 in.)
Service Limit: 102.10 mm (4.020 in.)

Piston Wear

● Measure the outside diameter [A] of each piston 9 mm (0.35 in.) [B] up from the bottom of the piston at a right angle to the direction of the piston pin.
★If the measurement is under service limit, replace the piston.

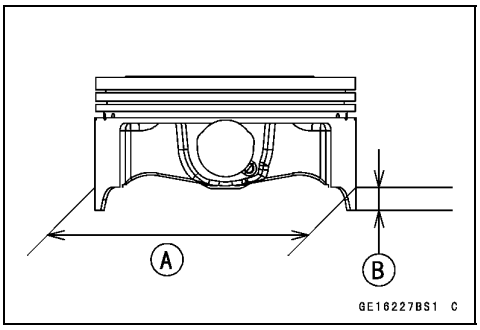

Piston Diameter
Standard: 101.942 ~ 101.957 mm (4.0135 ~ 4.0140 in.)
Service Limit: 101.79 mm (4.007 in.)

Downloaded from www.vulcanriders-sweden.org

Cylinders, Pistons

Piston Ring, Piston Ring Groove Wear

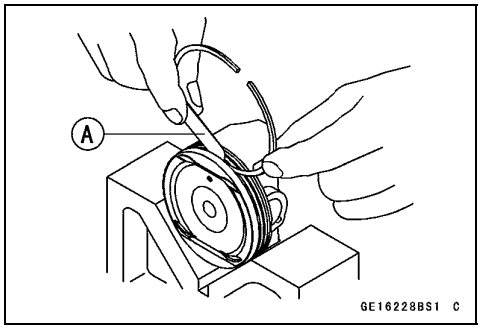

- Check for uneven groove wear by inspecting the ring seating.

★The rings should fit perfectly parallel to groove surfaces. If not, replace the piston and all the piston rings.

- With the piston rings in their grooves, make several measurements with a thickness gauge [A] to determine piston ring/groove clearance.

Piston Ring/Groove Clearance
Standard:

Top	**0.04 ~ 0.07 mm (0.015 ~ 0.0027 in.)**
Second	**0.02 ~ 0.06 mm (0.0007 ~ 0.0023 in.)**

Service Limit:

Top	**0.17 mm (0.0067 in.)**
Second	**0.16 mm (0.0063 in.)**

★If the piston ring groove clearance is greater than the service limit, measure the ring thickness and groove width as follows to decide whether to replace the rings, the piston or both.

Piston Ring Groove Width

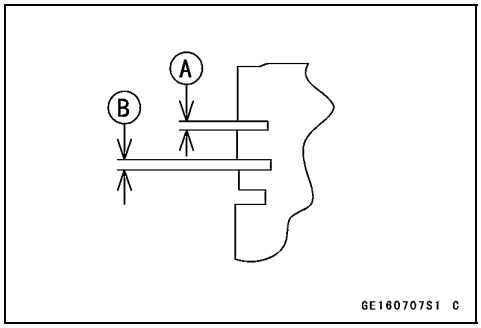

- Measure the piston ring groove width.

○Use a vernier caliper at several points around the piston.

Piston Ring Groove Width
Standard:

Top [A]	**1.23 ~ 1.24 mm (0.0484 ~ 0.0488 in.)**
Second [B]	**1.21 ~ 1.23 mm (0.0476 ~ 0.0484 in.)**

Service Limit:

Top [A]	**1.32 mm (0.0520 in.)**
Second [B]	**1.31 mm (0.0516 in.)**

★If the width of any of the two grooves is wider than the service limit at any point, replace the piston.

Piston Ring Thickness

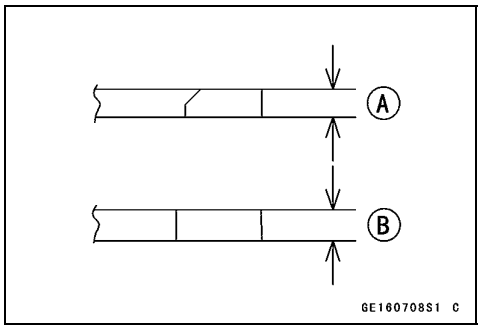

- Measure the piston ring thickness.

○Use a micrometer to measure at several points around the ring.

Piston Ring Thickness
Standard:

Top [A]	**1.17 ~ 1.19 mm (0.0461 ~ 0.0469 in.)**
Second [B]	**1.17 ~ 1.19 mm (0.0461 ~ 0.0469 in.)**

Service Limit:

Top [A]	**1.10 mm (0.0433 in.)**
Second [B]	**1.10 mm (0.0433 in.)**

★If any of the measurements is less than the service limit on either of the rings, replace all the rings.

NOTE

○*When using new rings in a used piston, check for uneven groove wear. The rings should fit perfectly parallel to the groove sides. If not, replace the piston.*

Downloaded from www.vulcanriders-sweden.org

Cylinders, Pistons

Piston Ring End Gap

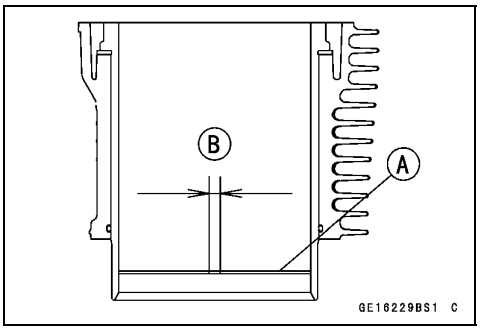

- Place the piston ring [A] inside the cylinder, using the piston to locate the ring squarely in place. Set it close to the bottom of the cylinder, where cylinder wear is low.
- Measure the gap [B] between the ends of the ring with a thickness gauge.

Piston Ring End Gap

Standard:

Top	**0.25 ~ 0.35 mm (0.0098 ~ 0.0138 in.)**
Second	**0.40 ~ 0.55 mm (0.00157 ~ 0.0217 in.)**

Service Limit:

Top	**0.7 mm (0.028 in.)**
Second	**0.9 mm (0.035 in.)**

★If the end gap of either ring is greater than the service limit, replace all the rings.

Downloaded from www.vulcanriders-sweden.org

Mufflers

⚠ WARNING

To avoid a serious burn, do not remove the muffler when the engine is still hot. Wait until the muffler cool down.

Muffler Body Removal

Left Muffler Body

- Loosen the muffler body clamp bolt [A].



- Remove:
  Left Saddlebag (see Saddlebag Removal in the Frame chapter)
  Muffler Body Mounting Bolts [A]
- Pull out the left muffler body [B] to left side from the exhaust pipe.

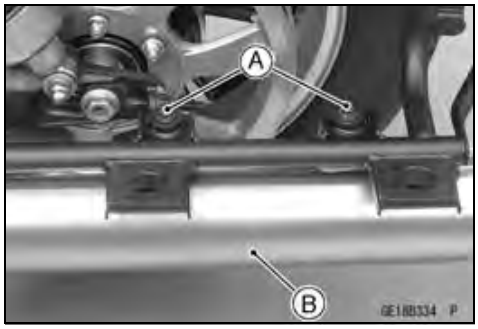

Right Muffler Body

- For equipped with the oxygen sensor, remove the following parts.
  Right Side Cover (see Right Side Cover Removal in the Frame chapter)
  Oxygen Sensor Lead Connector [A]

CAUTION

Do not pull strongly, twist, or bend the oxygen sensor lead. This may cause the wiring open.



- Loosen the muffler body clamp bolt [A].
- Remove the middle exhaust pipe cover holder bolt [B].

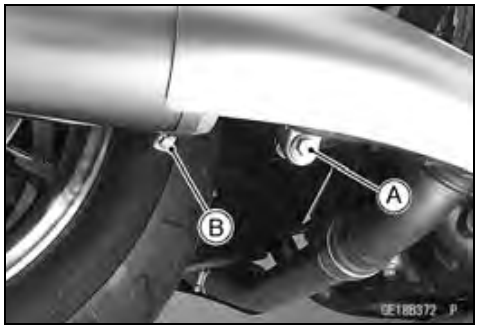

Downloaded from www.vulcanriders-sweden.org

Mufflers

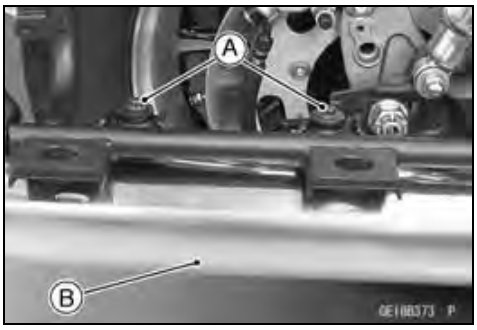

- Remove:
  Right Saddlebag (see Saddlebag Removal in the Frame chapter)
  Muffler Body Mounting Bolts [A]
- Pull out the right muffler body [B] backward from the exhaust pipe.

Muffler Body Installation

★If the left muffler body cover [A] was removed, install it as follows.

○Hang the left muffler body cover clamp [B] on the hook portion [C] of the cover securely.

○Set the left muffler body cover so that the distance between the cover end and belt cover [D] is the 10 ~ 15 mm (0.39 in. ~ 0.59 in.) [E].
Upside View [F]

○Set the clamp so that its bolt head and the cover end [G] become parallel, and tighten the clamp bolt securely.

○Hang the hook portion of the holder [H] into the slot of the cover, and tighten the holder bolt [I].

○Set the holder so that the distance between the holder and the welding portion of the muffler body is about 2 mm (0.08 in.) [J].

- Replace the muffler body gasket [K] with a new one.
- First, install the gasket to the exhaust pipe [L] until it is bottomed so that chamfer side (inner) [M] faces muffler body, and then insert the muffler body to the exhaust pipe.
- Tighten:

Torque - Muffler Body Mounting Bolts [N] : 25 N·m (2.5 kgf·m, 18 ft·lb)

- Install the muffler body clamp [O] as shown in the figure, and tighten the clamp bolt [P] securely.

○Insert the projection [Q] into the slot [R].

○Before tightening the clamp bolt, check that the muffler gasket is in place on the exhaust pipe.

- For right muffler body, hang the hook portion of the holder [S] into the slot of the middle exhaust pipe cover [T], and tighten the holder bolt [U].
- Set the holder so that the distance between the holder and the welding portion of the muffler body is about 2 mm (0.08 in.) [V].
  Right Side View [W]

Downloaded from www.vulcanriders-sweden.org

Mufflers

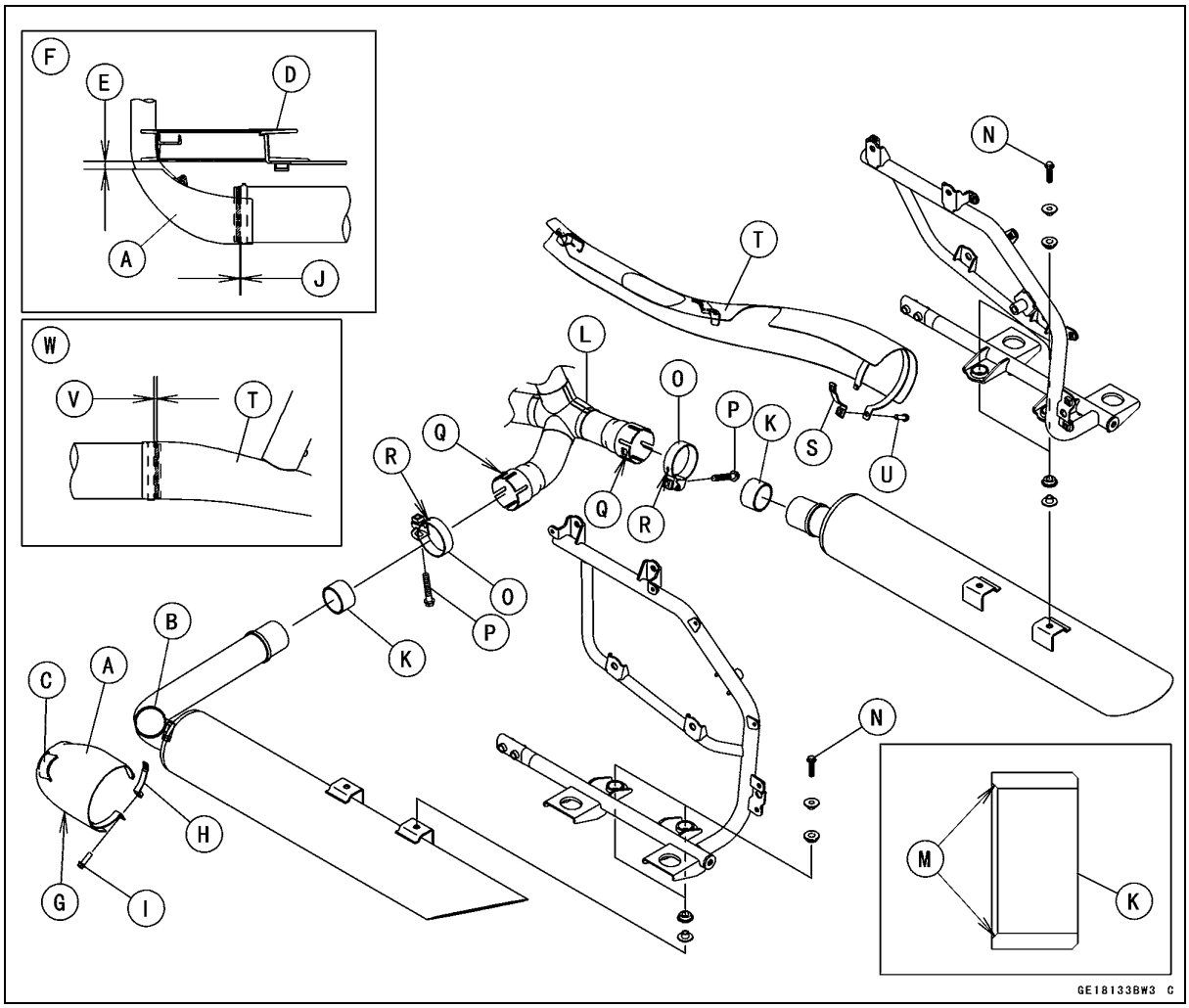

○For equipped with the oxygen sensor, run the oxygen sensor lead correctly (see Cable, Wire, and Hose Routing section in the Appendix chapter).

CAUTION

Do not pull strongly, twist, or bend the oxygen sensor lead. This may cause the wiring open.

- Thoroughly warm up the engine, wait until the engine cools down, retighten all the bolts.

Exhaust Pipe Removal

- Remove the left and right muffler bodies (see Muffler Body Removal).
- Loosen the rear exhaust pipe cover clamp bolts [A]
- Slide the clamps [B] upward [C], and remove the rear exhaust pipe cover [D].

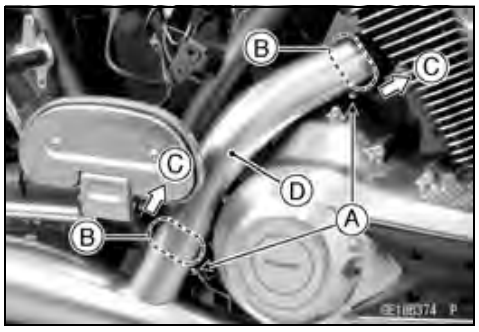

Downloaded from www.vulcanriders-sweden.org

Mufflers

- Loosen the middle exhaust pipe cover clamp bolts [A]
- Slide the clamp [B] of the rear side backward [C].
- Slide the clamp [D] of the front side forward [E], and remove the middle exhaust pipe cover [F].

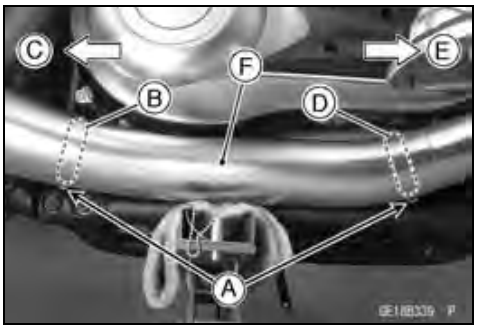

- Loosen the front exhaust pipe cover clamp bolt [A].
- Slide the clamp [B] forward [C].

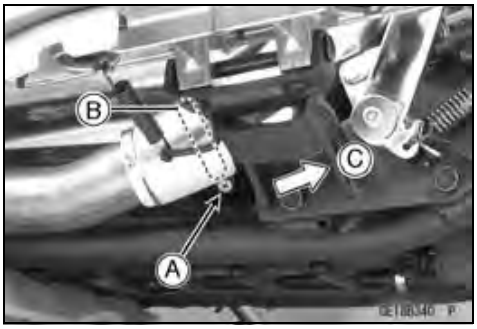

- Loosen the front exhaust pipe cover clamp bolts [A].
- Slide the clamps [B] upward [C], and remove the front exhaust pipe cover [D].

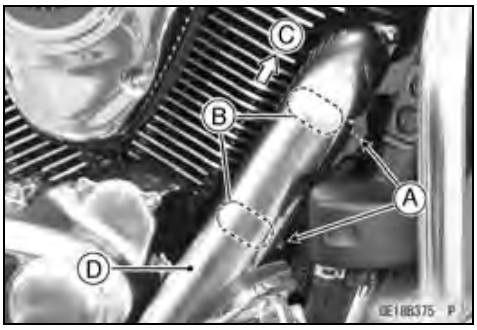

- Remove:
  Exhaust Pipe Holder Nuts [A]
  Exhaust Pipe [B]

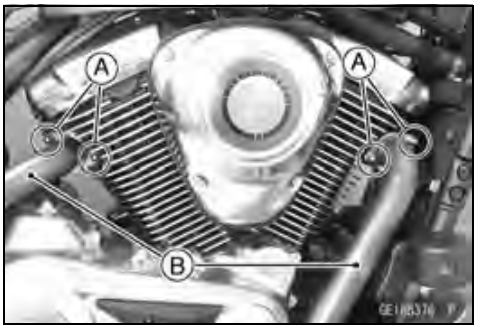

Downloaded from www.vulcanriders-sweden.org

Mufflers

Dummy Page

Downloaded from www.vulcanriders-sweden.org

Mufflers

Exhaust Pipe Installation

- Replace the exhaust pipe gaskets [A] with new ones.
- Install the exhaust pipe holders [B] so that the “up” mark faces upper side.
- Tighten:

Torque - Exhaust Pipe Holder Nuts [C] : 17 N·m (1.7 kgf·m, 12 ft·lb)

- Hang the front exhaust pipe cover clamps [D] on the hook portions [E] of the cover securely.
- Set the front exhaust pipe cover so that the distance between the cutout portion [F] and clutch cover [G] is the 10 ~ 15 mm (0.39 in. ~ 0.59 in.) [H].
- Align the two clamp bolt heads of the upper side and the cutout portions [I] of the cover, and tighten the clamp bolts securely.
- Set the clamp of the lower side so that its bolt head and the cover end [J] become parallel, and tighten the clamp bolt securely.
- Hang the middle exhaust pipe cover clamps [K] on the hook portions [L] of the cover securely.
- Set the clamps so that its bolt head and the cover end [M] become parallel, and tighten the clamp bolts securely.
- Hang the rear exhaust pipe cover clamps [N] on the hook portions [O] of the cover securely.
- Set the rear exhaust pipe cover so that the distance between the cutout portion [P] and clutch cover [G] is the 10 ~ 15 mm (0.39 in. ~ 0.59 in.) [Q].
- Set the clamps so that its bolt head and the cover end [R] become parallel, and tighten the clamp bolts securely.

Downloaded from www.vulcanriders-sweden.org

Mufflers

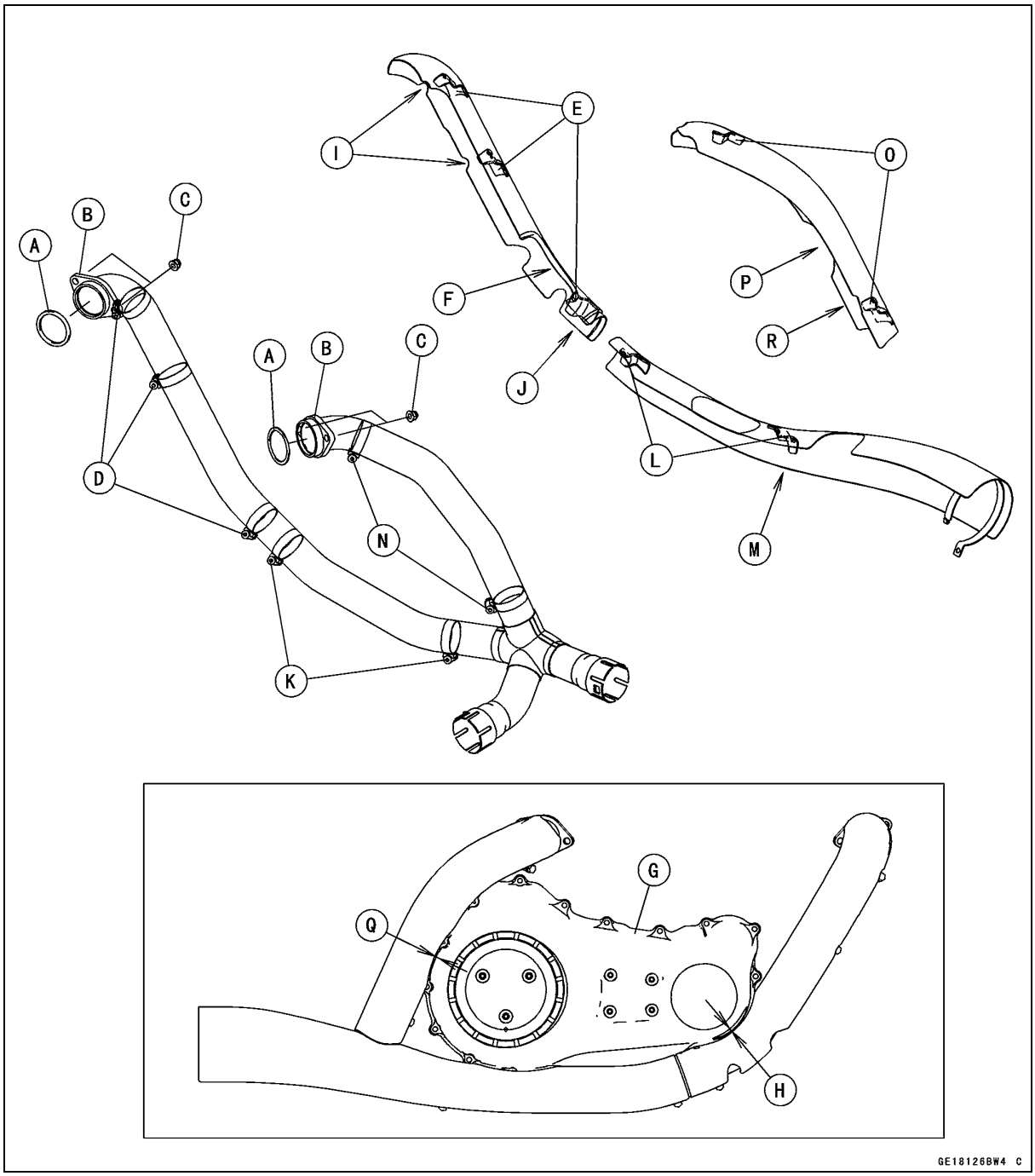

- Install the left and right muffler bodies (see Muffler Body Installation).
- Thoroughly warm up the engine, wait until the engine cools down, retighten all the bolts and nuts.

Downloaded from www.vulcanriders-sweden.org

Downloaded from www.vulcanriders-sweden.org

Clutch

Table of Contents

Exploded View 6-2
Specifications 6-4
Special Tools 6-5
Clutch Fluid 6-6
- Clutch Fluid Level Inspection 6-6
- Clutch Fluid Change 6-6
- Clutch Line Bleeding 6-6
- Clutch Hose Removal/Installation 6-6
- Clutch Hose Inspection 6-6

Clutch Master Cylinder 6-7
- Clutch Lever Adjustment 6-7
- Clutch Master Cylinder Removal 6-7
- Clutch Master Cylinder Installation 6-7
- Clutch Master Cylinder Disassembly/Assembly 6-7
- Clutch Master Cylinder Inspection 6-8

Clutch Slave Cylinder 6-9
- Clutch Slave Cylinder Removal 6-9
- Clutch Slave Cylinder Installation 6-9
- Clutch Slave Cylinder Disassembly/Assembly 6-10

Clutch 6-11
- Clutch Cover Removal 6-11
- Clutch Cover Installation 6-11
- Clutch Outer Covers Removal 6-11
- Clutch Outer Covers Installation 6-12
- Clutch Removal 6-12
- Clutch Installation 6-14

Clutch 6-18
- Clutch Plate, Wear, Damage Inspection 6-18
- Clutch Plate Warp 6-18
- Clutch Spring Free Length Measurement 6-18
- Clutch Housing Finger Inspection 6-18
- Clutch Hub Spline Inspection 6-19
- Damper Cam Inspection 6-19

Downloaded from www.vulcanriders-sweden.org

Exploded View

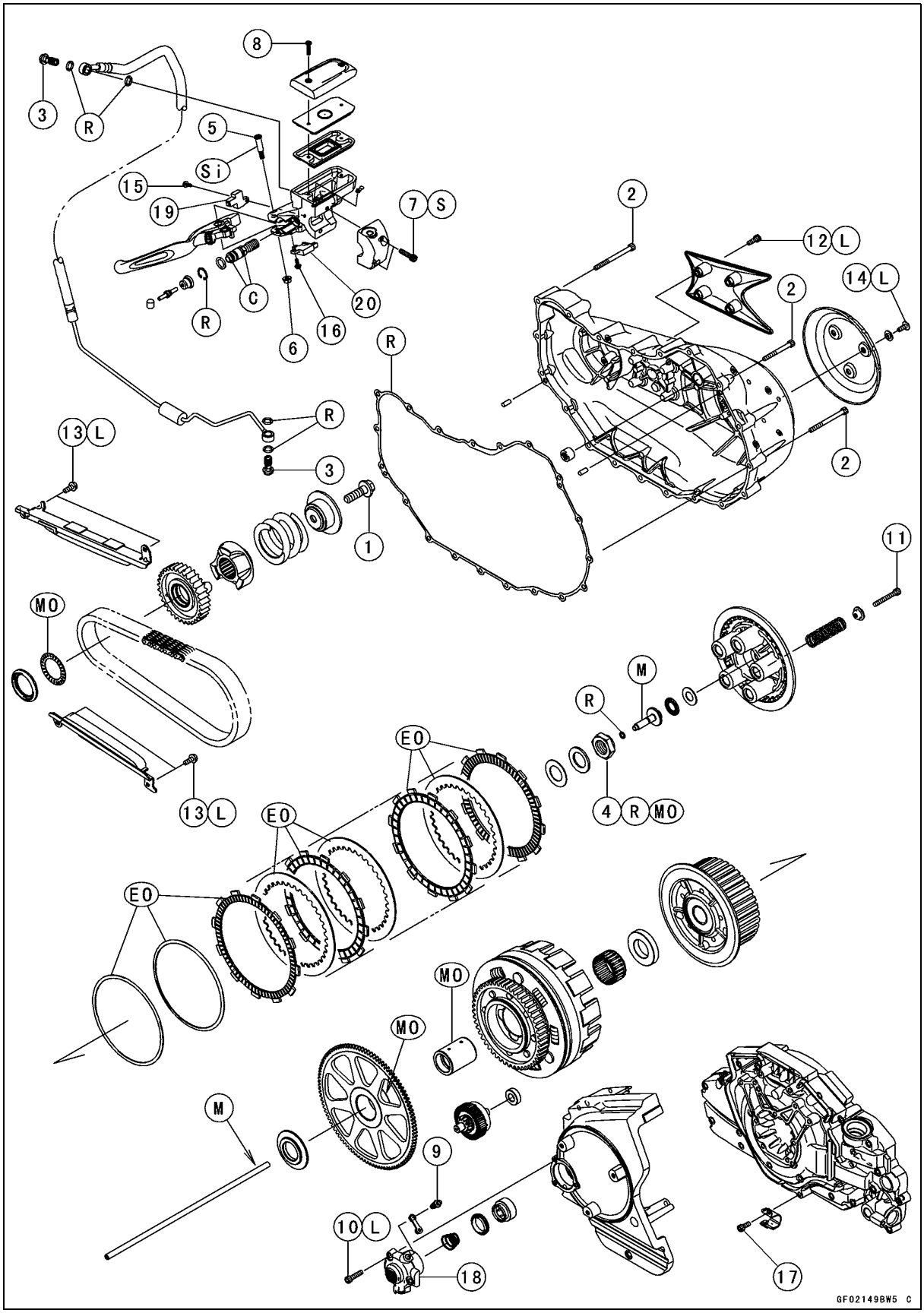

Downloaded from www.vulcanriders-sweden.org

Exploded View

No.	Fastener	Torque			Remarks
		N·m	kgf·m	ft·lb	
1	Cam Damper Bolt	69	7.0	51	
2	Clutch Cover Bolts	12	1.2	106 in·lb	
3	Clutch Hose Banjo Bolt	25	2.5	18	
4	Clutch Hub Nut	185	19.0	136	MO, R
5	Clutch Lever Pivot Bolt	1.0	0.10	8.8 in·lb	Si
6	Clutch Lever Pivot Bolt Locknut	5.9	0.60	52 in·lb	
7	Clutch Master Cylinder Clamp Bolts	11	1.1	97 in·lb	S
8	Clutch Reservoir Cap Screws	1.5	0.15	13 in·lb	
9	Clutch Slave Cylinder Bleed Valve	7.8	0.80	69 in·lb	
10	Clutch Slave Cylinder Bolts	12	1.2	106 in·lb	L
11	Clutch Spring Bolts	12	1.2	106 in·lb	
12	Front Outer Clutch Cover Bolts	9.8	1.0	87 in·lb	L
13	Primary Chain Guide Bolts	9.8	1.0	87 in·lb	L
14	Rear Outer Clutch Cover Bolts	9.8	1.0	87 in·lb	L
15	Starter Lockout Switch Screw	1.2	0.12	11 in·lb	
16	Cruise Control Cancel Switch (Clutch) Screw	1.2	0.12	11 in·lb	
17	Clutch Pipe Bracket Bolt	12	1.2	106 in·lb	

18. Clutch Slave Cylinder
19. Starter Lockout Switch
20. Cruise Control Cancel Switch (Clutch)

C: Apply clutch fluid.
EO: Apply engine oil.
L: Apply a non-permanent locking agent.
M: Apply Molybdenum disulfide grease.
MO: Apply Molybdenum disulfide oil solution.
(mixture of the engine oil and molybdenum disulfide grease in a weight ratio 10:1)
R: Replacement Parts
S: Follow the specific tightening sequence.
Si: Apply silicone grease.

Downloaded from www.vulcanriders-sweden.org

6-4 CLUTCH

Specifications

Item	Standard	Service Limit
Clutch Fluid		
Grade	DOT4	– – –
Clutch Lever		
Clutch Lever Position	8-way adjustable (to suit Rider)	– – –
Clutch Lever Free Play	Non-adjustable	– – –
Clutch		
Friction Plate Thickness	3.30 ~ 3.50 mm (0.130 ~ 0.138 in.)	3.0 mm (0.12 in.)
Friction Plate Warp	0.20 mm (0.0078 in.) or less	0.3 mm (0.01 in.)
Steel Plate Warp	0.15 mm (0.0059 in.) or less	0.3 mm (0.01 in.)
Clutch Spring Free Lengh	77.77 mm (3.06 in.)	74.4 mm (2.93 in.)

Downloaded from www.vulcanriders-sweden.org

Special Tools

Bearing Driver Set:
57001-1129

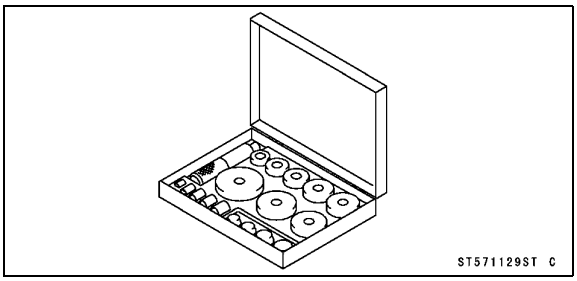

Grip:
57001-1591

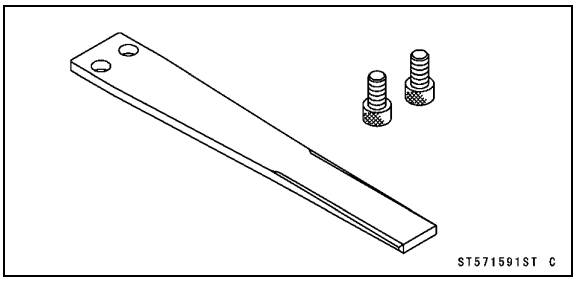

Clutch Holder:
57001-1243

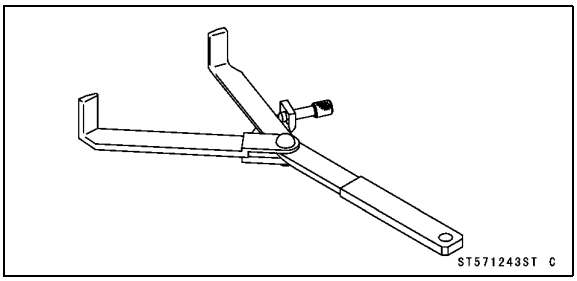

Rotor Holder:
57001-1726

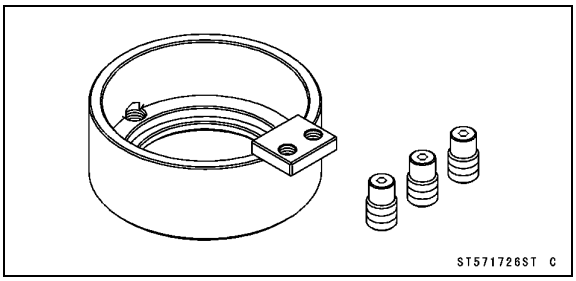

Downloaded from www.vulcanriders-sweden.org

Clutch Fluid

Clutch Fluid Level Inspection

● Refer to the Clutch Fluid Level Inspection in the Periodic Maintenance chapter.

Clutch Fluid Change

● Refer to the Clutch Fluid Change in the Periodic Maintenance chapter.

Clutch Line Bleeding

● Remove the engine pulley outer cover (see Engine Pulley Outer Cover Removal in the Final Drive chapter).

● With the reservoir cap off, slowly pump the clutch lever several times until no air bubbles can be seen rising up through the fluid from the holes at the bottom of the reservoir. This bleeds the air from the master cylinder end of the line.



NOTE

○*Tap the clutch hose lightly going from the lower end to the upper end and bleed the air off at the reservoir.*

● Attach a clear plastic hose [A] to the bleed valve on the clutch slave cylinder, and run the other end of the hose into a container.

● Bleed the clutch line as follows.

○Repeat this operation until no more air can be seen coming out into the plastic hose.

1. Pump the clutch lever a few times until it becomes hard and then hold it applied [B].
2. Quickly open and close [C] the bleed valve.
3. Release [D] the clutch lever.

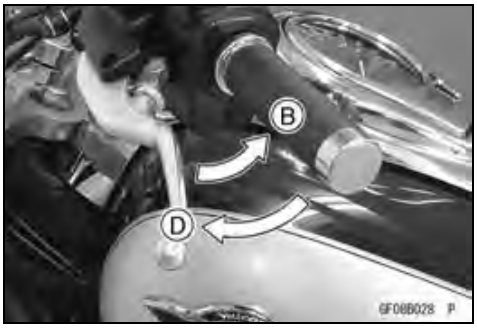

NOTE

○*The fluid level must be checked often during the changing operation and replenished with fresh fluid. If the fluid in the reservoir runs completely out any time during bleeding, the bleeding operation must be done over again from the beginning since air will have entered the line.*

⚠ WARNING

Do not mix different grades and brands of fluid.

Torque - Clutch Reservoir Cap Screws: 1.5 N·m (0.15 kgf·m, 13 in·lb)
Clutch Slave Cylinder Bleed Valve: 7.8 N·m (0.80 kgf·m, 69 in·lb)

Clutch Hose Removal/Installation

● Refer to the Clutch Hose and Pipe Replacement in the Periodic Maintenance chapter.

Clutch Hose Inspection

● Refer to the Clutch Hose and Pipe Damage and Installation Condition Inspection in the Periodic Maintenance chapter.

Downloaded from www.vulcanriders-sweden.org

Clutch Master Cylinder

Clutch Lever Adjustment

The adjuster has 8 positions so that the clutch lever position can be adjusted to suit the operator's hand.

- Push the lever forward and turn the adjuster [A].



Clutch Master Cylinder Removal

- Disconnect
  Starter Lockout Switch Connectors [A]
  Cruise Control Cancel Switch Connectors [B]
- Remove the banjo bolt [C] to disconnect the clutch hose from the master cylinder (see Clutch Hose and Pipe Replacement in the Periodic Maintenance chapter).

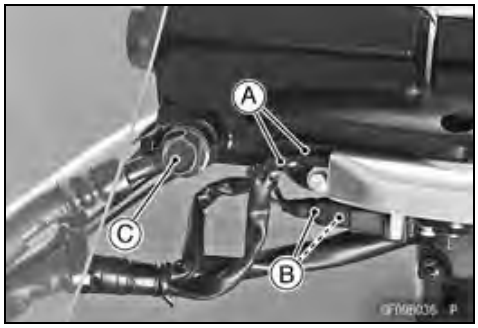

- Unscrew the clamp bolts [A], and take off the master cylinder [B] as an assembly with the clutch lever, starter lockout switch, and cruise control cancel switch installed.

CAUTION
Immediately wash away any clutch fluid that spills.

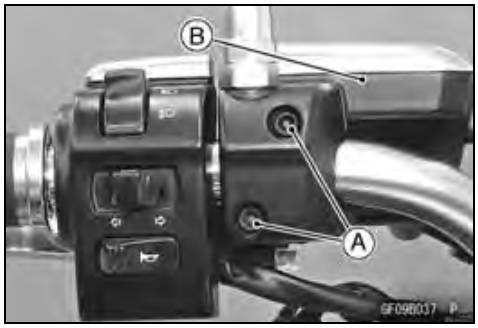

Clutch Master Cylinder Installation

- Install the clutch master cylinder [A] so that the mating surface [B] of the master cylinder is aligned with the punch mark [C] of the handlebar.
- Tighten the upper clamp bolt first, then the lower clamp bolt.

Torque - Clutch Master Cylinder Clamp Bolts: 11 N·m (1.1 kgf·m, 97 in·lb)

- Replace the washers on each side of the hose fitting with new ones.
- Tighten:

Torque - Clutch Hose Banjo Bolt: 25 N·m (2.5 kgf·m, 18 ft·lb)

- Replenish the clutch fluid into the reservoir and bleed the clutch line (see Clutch Line Bleeding).
- Check that the clutch line has proper fluid pressure and no fluid leakage.



Clutch Master Cylinder Disassembly/Assembly

- Refer to the Clutch Master Cylinder Rubber Parts Replacement in the Periodic Maintenance chapter.

Downloaded from www.vulcanriders-sweden.org

Clutch Master Cylinder

Clutch Master Cylinder Inspection

- Disassemble the clutch master cylinder (see Clutch Master Cylinder Rubber Parts Replacement in the Periodic Maintenance chapter).

CAUTION

Do not remove the secondary cup from the piston since removal will damage it.

- Check that there are no scratches, rust or pitting on the inside of the master cylinder [A] and on the outside of the piston [B].

★If the master cylinder or piston shows any damage, replace them.

- Inspect the primary cup [C] and secondary cup [D].

★If a cup is worn, damaged, softened (rotted), or swollen, the piston assembly should be replaced to renew the cups.

- If fluid leakage is noted at the clutch lever, the piston assembly should be replaced to renew the cups.
- Check the dust cover [E] for damage.
- If it is damaged, replace it.
- Check that the relief and supply ports are not plugged.

★If the small relief port becomes plugged, the clutch will drag. Blow the ports clean with compressed air.

- Check the piston return spring for any damage.

★If the spring is damaged, replace it.

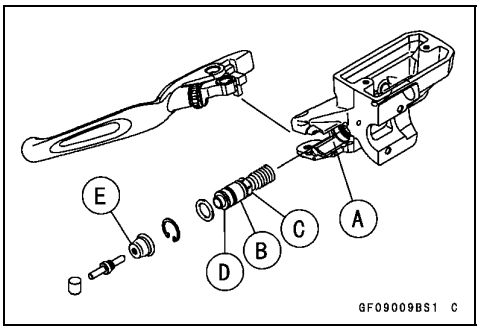

Downloaded from www.vulcanriders-sweden.org

Clutch Slave Cylinder

Clutch Slave Cylinder Removal

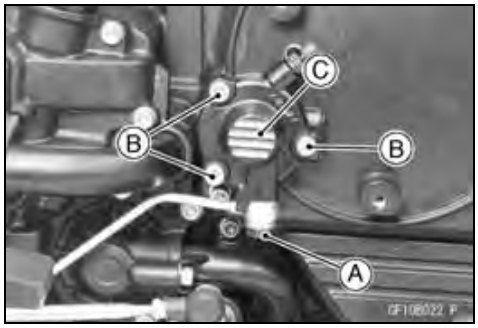

● Remove:
Engine Pulley Outer Cover (see Engine Pulley Outer Cover Removal in the Final Drive chapter)
Banjo Bolt [A]
Clutch Slave Cylinder Bolts [B]
Slave Cylinder [C]

CAUTION

Immediately wash away any clutch fluid that spills.

● Perform the following if the clutch slave cylinder is to be removed but not disassembled.

CAUTION

If the clutch slave cylinder is removed and left alone, the piston will be pushed out by spring force and the clutch fluid will drain out.

○Remove the clutch slave cylinder with the pipe installed.
○Push [A] the piston into the cylinder as far as it will go.



○Apply the clutch lever [A] slowly and hold it with a band [B].

NOTE

○*Holding the clutch lever keeps the piston from coming out.*

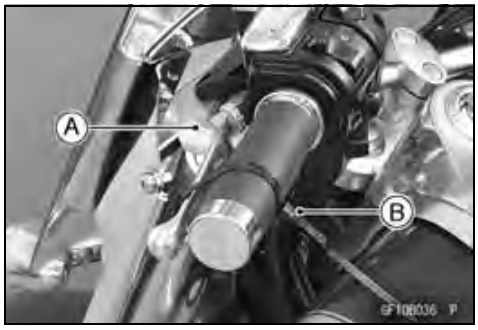

Clutch Slave Cylinder Installation

★If the push rod [A] was removed, apply molybdenum disulfide grease to the end [B] of the push rod, and install the push rod so that the greased end faces in.

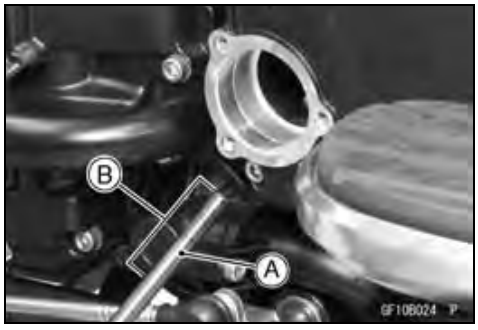

Downloaded from www.vulcanriders-sweden.org

Clutch Slave Cylinder

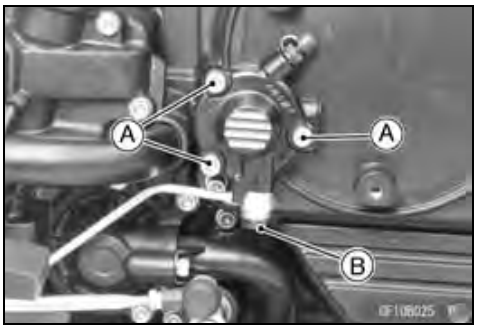

- Apply a non-permanent locking agent to the threads of the slave cylinder bolts [A].
- Hand-tighten all the clutch slave cylinder bolts evenly.
- Remove the band from the clutch lever and release the clutch lever.
- Tighten the slave cylinder bolts.

Torque - Clutch Slave Cylinder Bolts: 12 N·m (1.2 kgf·m, 106 in·lb)

- Replace the washers on each side of the clutch hose fitting with new ones.
- Tighten the banjo bolt [B] to the specified torque.

Torque - Clutch Hose Banjo Bolt : 25 N·m (2.5 kgf·m, 18 ft·lb)

- Check the fluid level in the master cylinder reservoir, and bleed the clutch line (see Clutch Line Air Bleeding).
- Check the clutch operation (see Clutch Operation Inspection in the Periodic Maintenance chapter).

Clutch Slave Cylinder Disassembly/Assembly

- Refer to the Clutch Slave Cylinder Piston Seal Replacement in the Periodic Maintenance chapter.

Downloaded from www.vulcanriders-sweden.org

Clutch

Clutch Cover Removal

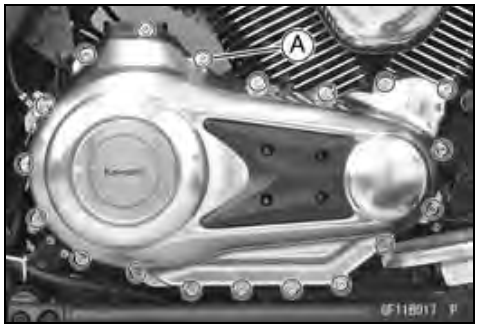

- Drain the engine oil (see Engine Oil Change in the Periodic Maintenance chapter).
- Remove the exhaust pipe (see Exhaust Pipe Removal in the Engine Top End chapter)
- Unscrew the clutch cover bolts (19) [A]

Clutch Cover Installation

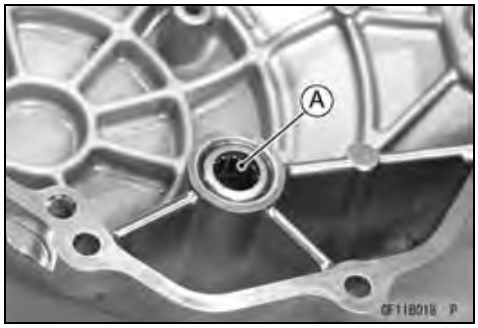

- When the new needle bearing [A] is installed in the clutch cover, press and insert the needle bearing so that the bearing surface is flush with the end of the hole.

  Special Tools - Bearing Driver Set: 57001-1129

NOTE

○*Install the needle bearings so that the manufacture's make face out.*

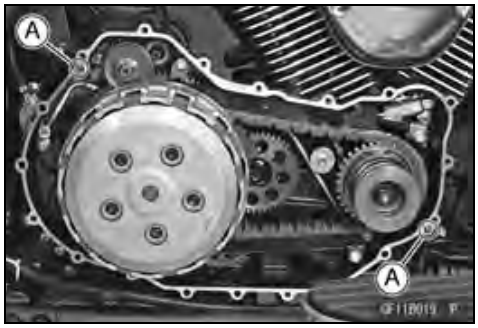

- Be sure that the dowel pins [A] are in position.
- Replace the clutch cover gasket with a new one.

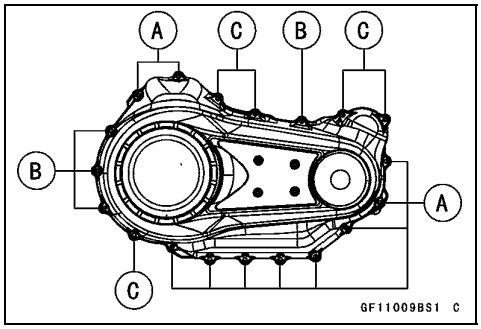

- Tighten:

  Torque - Clutch Cover Bolts: 12 N·m (1.2 kgf·m, 106 in·lb)

  L = 50 mm (2.0 in.) [A]
  L = 65 mm (2.6 in.) [B]
  L = 75 mm (3.0 in.) [C]
- Install the removed parts (see appropriate chapter).

Clutch Outer Covers Removal

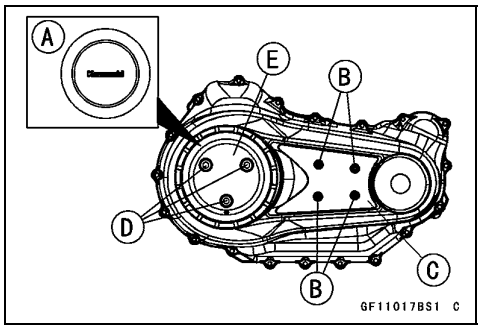

- Detach the clutch outer mark cover [A]
- Remove:
  Front Outer Clutch Cover Bolts [B]
  Front Outer Clutch Cover [C]
  Rear Outer Clutch Cover Bolts [D]
  Rear Outer Clutch Cover [E]

Downloaded from www.vulcanriders-sweden.org

Clutch

Clutch Outer Covers Installation

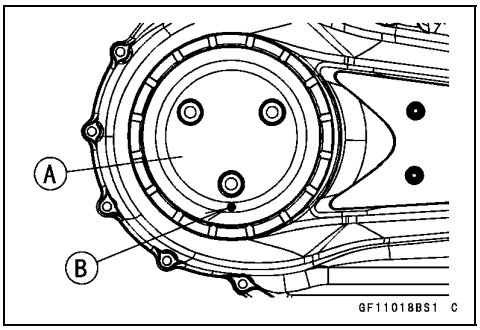

- Install the front and rear outer clutch covers.
- When installing the rear outer clutch cover [A], set the round mark [B] downward.
- Apply a non-permanent locking agent to the threads of the front and rear outer clutch cover bolts, and tighten them.

Torque - Front Outer Clutch Cover Bolts 9.8 N·m (1.0 kgf·m, 87 in·lb)
Rear Outer Clutch Cover Bolts 9.8 N·m (1.0 kgf·m, 87 in·lb)

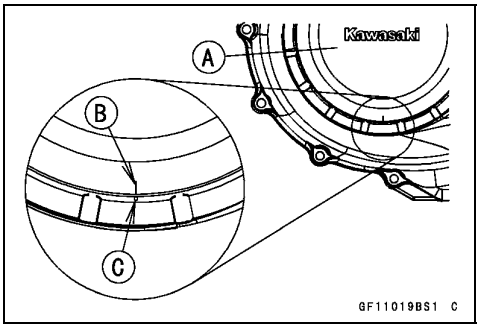

- Install the clutch outer mark cover [A] so that the mark [B] of the clutch outer mark cover is aligned with the punch mark [C] of the rear outer clutch cover.

Clutch Removal

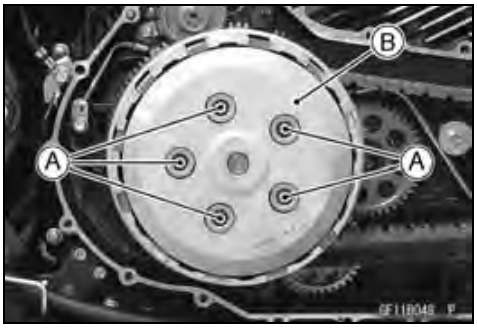

- Drain the engine oil (see Engine Oil Change in the Periodic Maintenance chapter).
- Remove the clutch cover (see Clutch Cover Removal).
- Remove:
  Clutch Spring Bolts [A]
  Clutch Springs (with Clutch Spring Holders)
  Clutch Spring Plate [B]

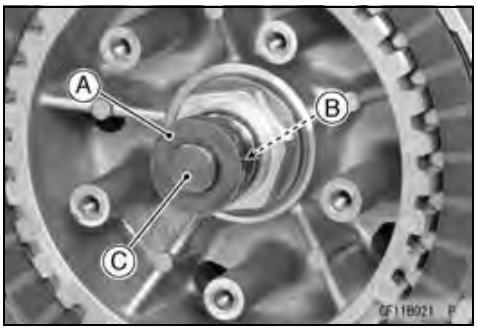

- Remove:
  Washer [A]
  Thrust Bearing [B]
  Push Rod [C]

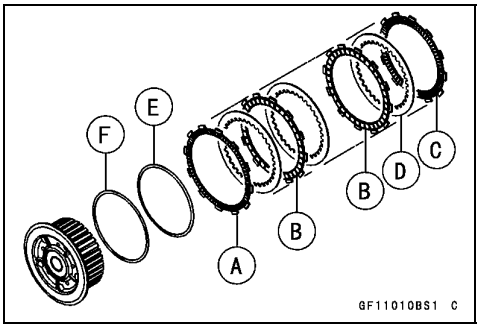

- Remove:
  Inner End Friction Plate (1) [A]
  Friction Plates (8) [B]
  Outer End Friction Plate (1) [C]
  Steel Plates (9) [D]
  Spring [E]
  Spring Seat [F]

Downloaded from www.vulcanriders-sweden.org

Clutch

● Remove:
Primary Chain Guide Bolts [A]
Primary Chain Guides [B]

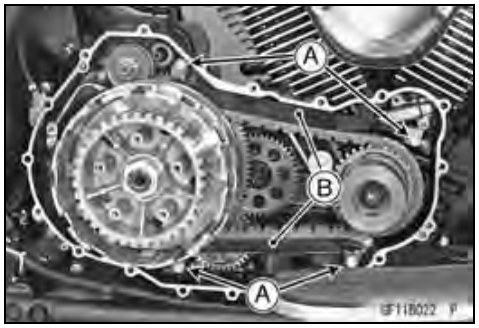

● Hold the clutch hub [A] steady with the clutch holder [B], and remove the clutch hub nut [C].

Special Tool - Clutch Holder: 57001-1243

● Remove:
Spring Washer
Washer
Clutch Hub

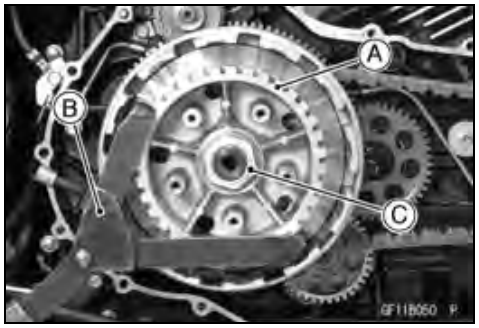

○Use the clutch holder with sharpened hook nose by grinding.

Special Tool - Clutch Holder: 57001-1243

○Grind the hook nose by 0.5 mm (0.02 in.) as shown in the figure.

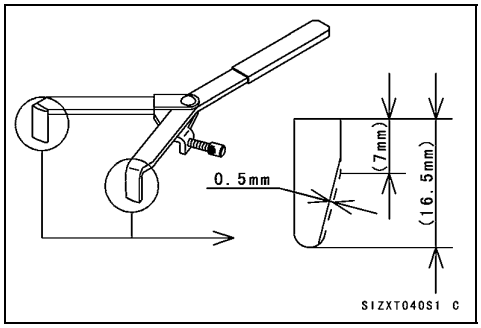

● Remove the spacer [A].



● Unscrew the cam damper bolt [A] while holding the alternator rotor steady with the rotor holder (see Alternator Rotor Removal in the Electrical System chapter).

Special Tools - Grip: 57001-1591
Rotor Holder: 57001-1726

● Remove:
Spring Retainer [B]
Spring [C]
Cam Damper [D]

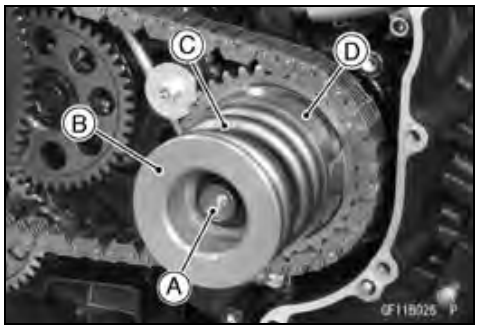

Downloaded from www.vulcanriders-sweden.org

Clutch

● Pull out the following parts as a set.
Primary Chain [A]
Clutch Housing [B]
Starter Clutch Gear [C]
Damper Cam Sprocket [D]
Torque Limiter [E]

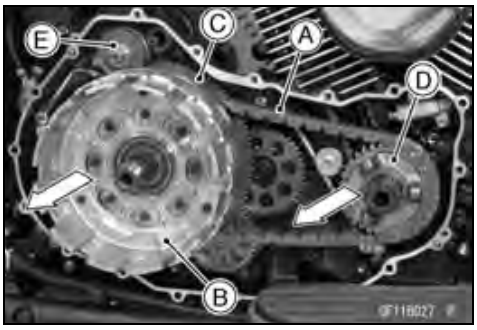

● Remove the collar [A] and spacer [B] from the input shaft.

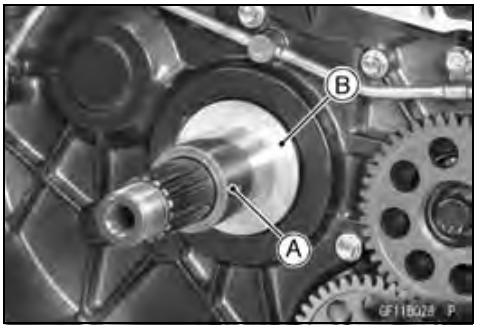

● Remove the thrust bearing [A] and spacer [B] from the crankshaft.

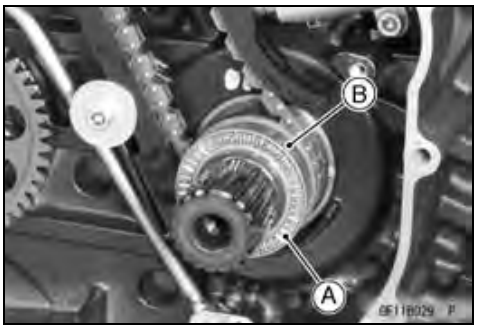

● Remove the needle bearing [A].
● Separate the following parts.
Clutch Housing [B]
Damper Cam Sprocket [C]
Primary Chain [D]
Starter Clutch Gear [E]

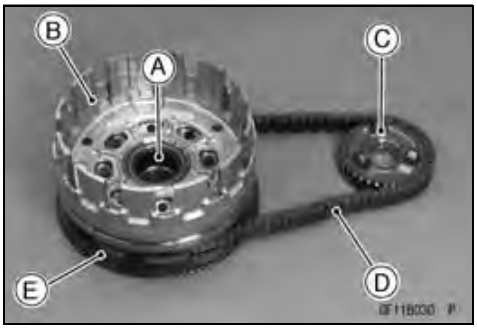

Clutch Installation

● Install the spacer [A] to the crankshaft so that the stepped side [B] faces inward.
● Install the thrust bearing [C].
○Apply molybdenum disulfide oil to the both sides of the thrust bearing.

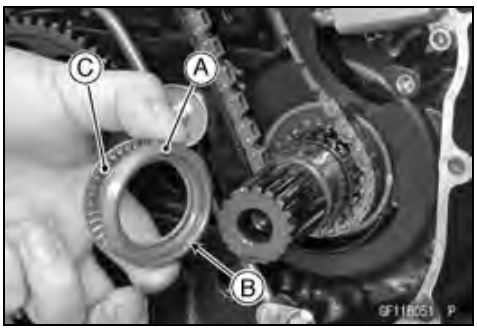

Downloaded from www.vulcanriders-sweden.org

Clutch

● Install the spacer [A] to the input shaft so that the stepped side [B] faces inward.

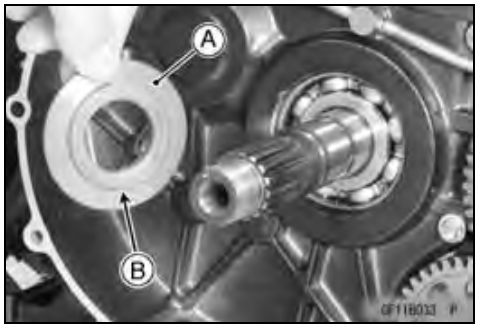

● Install the starter clutch gear [A] and collar [B].
○Apply molybdenum disulfide oil [C] to the starter clutch gear and collar.

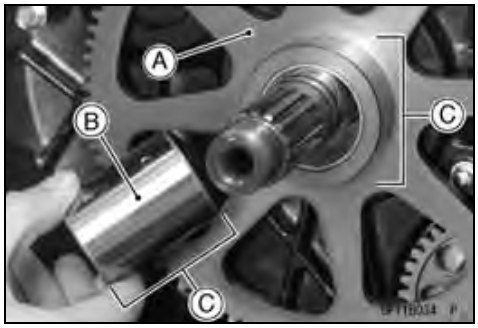

● Install the torque limiter [A] and spacer [B].

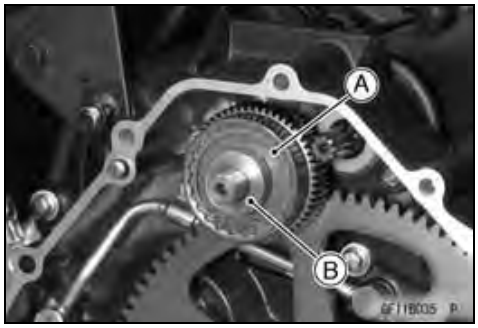

● Engage the primary chain [A] with the damper cam sprocket [B] and cutch housing [C] as shown.

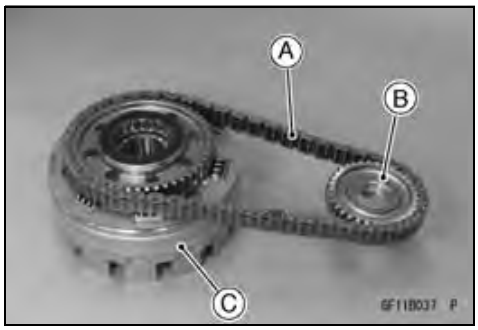

● Insert the clutch housing and sprocket together with the primary chain while turning counterclockwise [A] the clutch housing and sprocket.

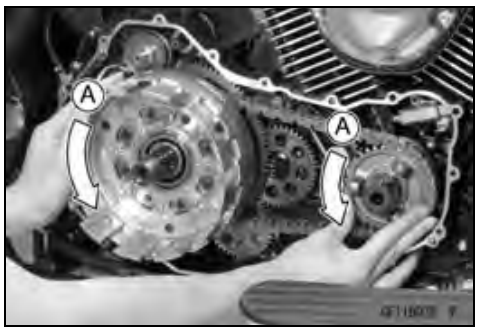

Downloaded from www.vulcanriders-sweden.org

Clutch

- Insert the needle bearing [A] to the input shaft while turning counterclockwise [B] the clutch housing.

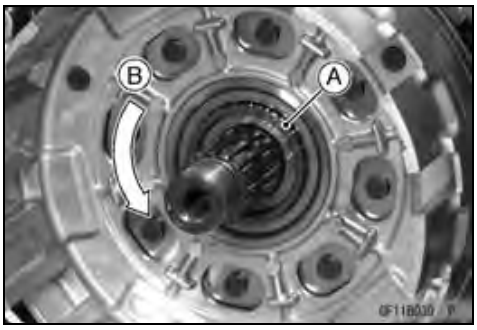

- Install the cam damper [A] while fitting the alignment notch [B] of the splines onto the alignment tooth [C].

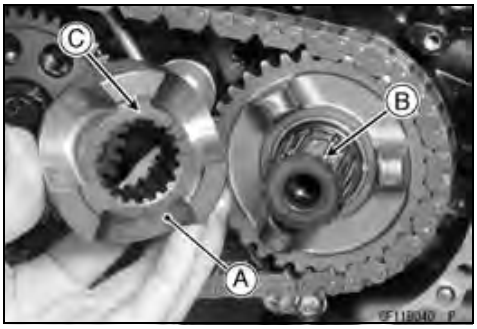

- Install:
  Spring [A]
  Spring Retainer [B]
- Tighten the cam damper bolt [C] while holding the alternator rotor steady with the rotor holder (see Alternator Rotor Installation in the Electrical System chapter).

Special Tools - Grip: 57001-1591
Rotor Holder: 57001-1726

Torque - Cam Damper Bolt: 69 N·m (7.0 kgf·m, 51 ft·lb)

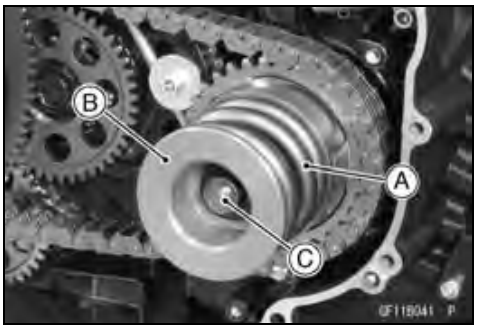

- Install:
  Spacer [A]
  Clutch Hub



- Install the washer [A] and spring washer [B] so that the "OUTSIDE" mark [C] faces outward.
- Replace the clutch hub nut with a new one.
- Apply molybdenum disulfide oil to seating surface of the hub nut.
- Hold the clutch hub steady with the clutch holder, tighten the clutch hub nut.

Special Tool - Clutch Holder: 57001-1243

Torque - Clutch Hub Nut: 185 N·m (19.0 kgf·m, 136 ft·lb)

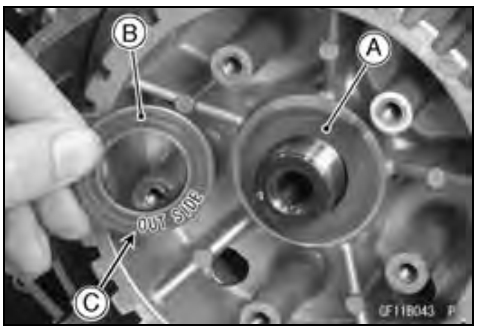

- Apply a non-permanent locking agent to the threads of the primary chain guide bolts, and tighten them.
- Install the primary chain guide.

Torque - Primary Chain Guide Bolts: 9.8 N·m (1.0 kgf·m, 87 in·lb)

Downloaded from www.vulcanriders-sweden.org

Clutch

● Install:
Inner End Friction Plate [A]
Friction Plates [B]
Outer End Friction Plate [C]
Steel Plates [D]
Spring [E]
Spring Seat [F]

CAUTION

If new dry friction plates and steel plates are installed, apply engine oil to the surfaces of each plate to avoid clutch plate seizure.

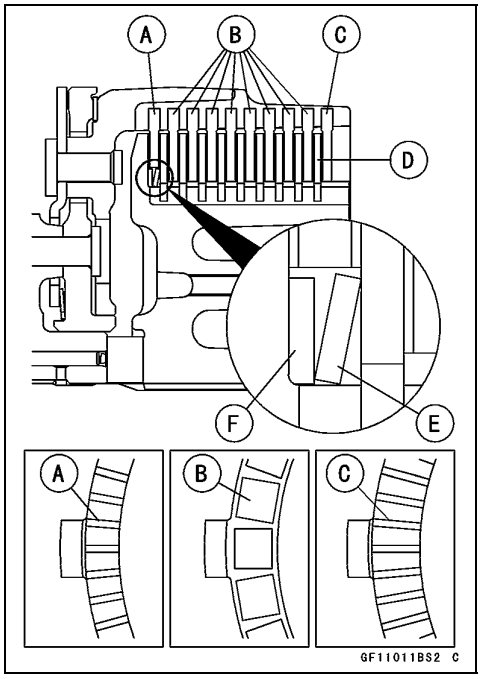

● Replace the O-ring [A] with a new one.
● Applymolybdenum disulfide grease [B] to the push rod [C].



● Install the thrust bearing [A] and washer [B] to the push rod [C].
● Install the spring plate [D].
● Install the clutch springs and spring holders, and tighten the clutch spring bolts [E].

Torque - Clutch Spring Bolts: 12 N·m (1.2 kgf·m, 106 in·lb)

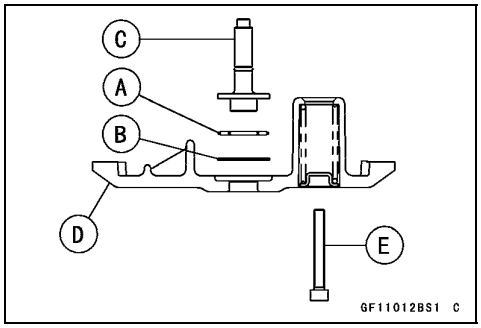

Downloaded from www.vulcanriders-sweden.org

Clutch

Clutch Plate, Wear, Damage Inspection

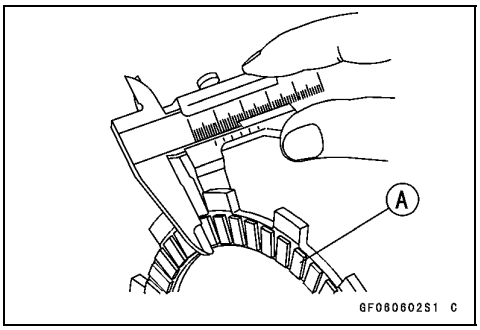

- Visually inspect the friction and steel plates for signs of seizure, overheating (discoloration), or uneven wear.

★If any plates show signs of damage, replace the plates.

- Measure the thickness of the friction plates [A] at several points.

★If they have worn past the service limit, replace the friction plate and measure the spring plate gap and adjust it if necessary.

Friction Plate Thickness

Standard:	**3.30 ~ 3.50 mm (0.130 ~ 0.138 in.)**
Service Limit:	**3.0 mm (0.12 in.)**

Clutch Plate Warp

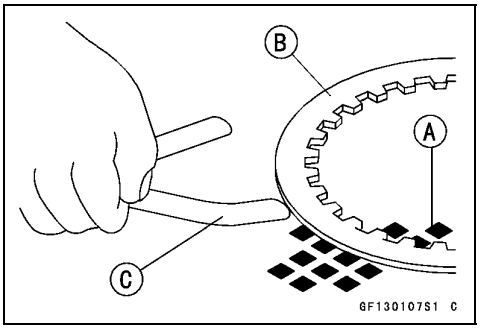

- Place each friction plate or steel plate on a surface plate, and measure the gap between the surface plate [A] and each friction plate or steel plate [B] with a thickness gauge [C]. The gap is the amount of friction or steel plate warp.

★If any friction plate is warped over the service limit, replace it and measure the spring plate gap, and adjust it if necessary.

★If any steel plate is warped over the service limit, replace it with a new one of the same thickness.

Friction Plate Warp

Standard:	**0.20 mm (0.0078 in.) or less**
Service Limit:	**0.3 mm (0.01 in.)**

Steel Plate Warp

Standard:	**0.15 mm (0.0059 in.) or less**
Service Limit:	**0.3 mm (0.01 in.)**

Clutch Spring Free Length Measurement

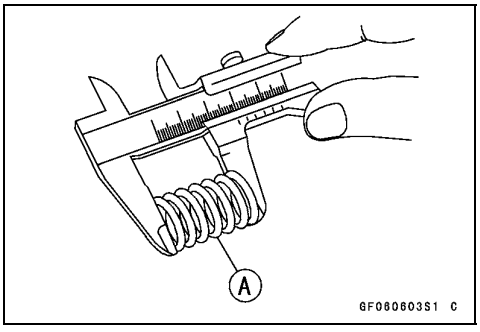

- Measure the free length of the clutch springs [A].

★If any spring is shorter than the service limit, it must be replaced.

Clutch Spring Free Length

Standard:	**77.77 mm (3.06 in.)**
Service Limit:	**74.4 mm (2.93 in.)**

Clutch Housing Finger Inspection

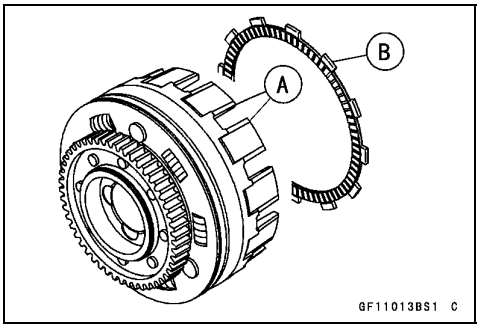

- Visually inspect the fingers [A] of the clutch housing where the tangs [B] of the friction plates hit them.

★If they are badly worn or if there are groove cuts where the tangs hit, replace the housing. Also, replace the friction plates if their tangs are damaged and measure the spring plate gap and adjust it if necessary.

Downloaded from www.vulcanriders-sweden.org

Clutch

Clutch Hub Spline Inspection

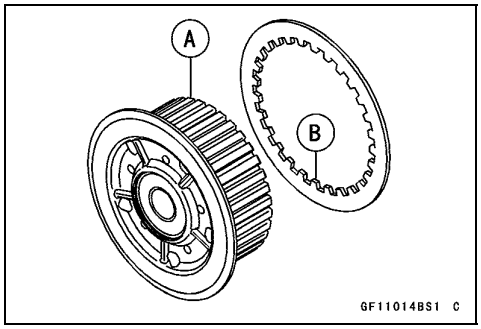

- Visually inspect where the teeth [B] on the steel plates wear against the splines [A] of the clutch hub.

★If there are notches worn into the splines, replace the outer clutch hub. Also, replace the steel plate with a new one of the same thickness if their teeth are damaged.

Damper Cam Inspection

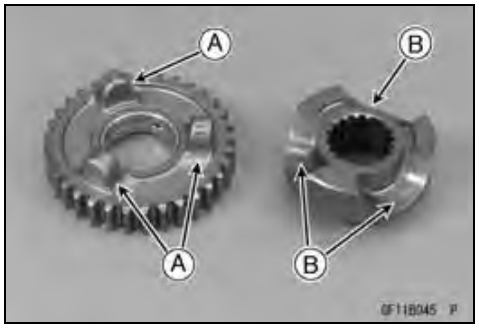

- Remove the damper cam (see Clutch Removal in this section).
- Visually inspect the damper cam [A], cam follower [B].
- Replace the part if it appears damaged.

Downloaded from www.vulcanriders-sweden.org

Downloaded from www.vulcanriders-sweden.org

Engine Lubrication System

Table of Contents

Exploded View 7-2
Engine Oil Flow Chart 7-4
Specifications 7-6
Special Tools and Sealant 7-7
Engine Oil and Oil Filter 7-8
  Oil Level Inspection 7-8
  Engine Oil Change 7-9
  Oil Filter Replacement 7-9
Oil Screen 7-10
  Oil Screen Removal 7-10
  Oil Screen Installation 7-11
Oil Pressure Relief Valve 7-12
  Oil Pressure Relief Valve Removal 7-12
  Oil Pressure Relief Valve Installation 7-12
  Oil Pressure Relief Valve Inspection 7-12
Oil Pump 7-13
  Oil Pump Gear Removal 7-13
  Oil Pump Gear Installation 7-13
  Oil Pump Drive Gear Removal 7-13
  Oil Pump Drive Gear Installation 7-13
  Oil Pump Removal 7-14
  Oil Pump Installation 7-15
Oil Pressure Measurement 7-17
  Oil Pressure Measurement 7-17
Oil Pressure Switch 7-18
  Oil Pressure Switch Removal 7-18
  Oil Pressure Switch Installation 7-18
Oil Pipes 7-19
  Oil Pipe Removal 7-19
  Oil Pipe Installation 7-20
Blowby Gas System 7-21
  Blowby Gas System Inspection 7-21
  Breather Drain Cleaning 7-22

Downloaded from www.vulcanriders-sweden.org

Exploded View

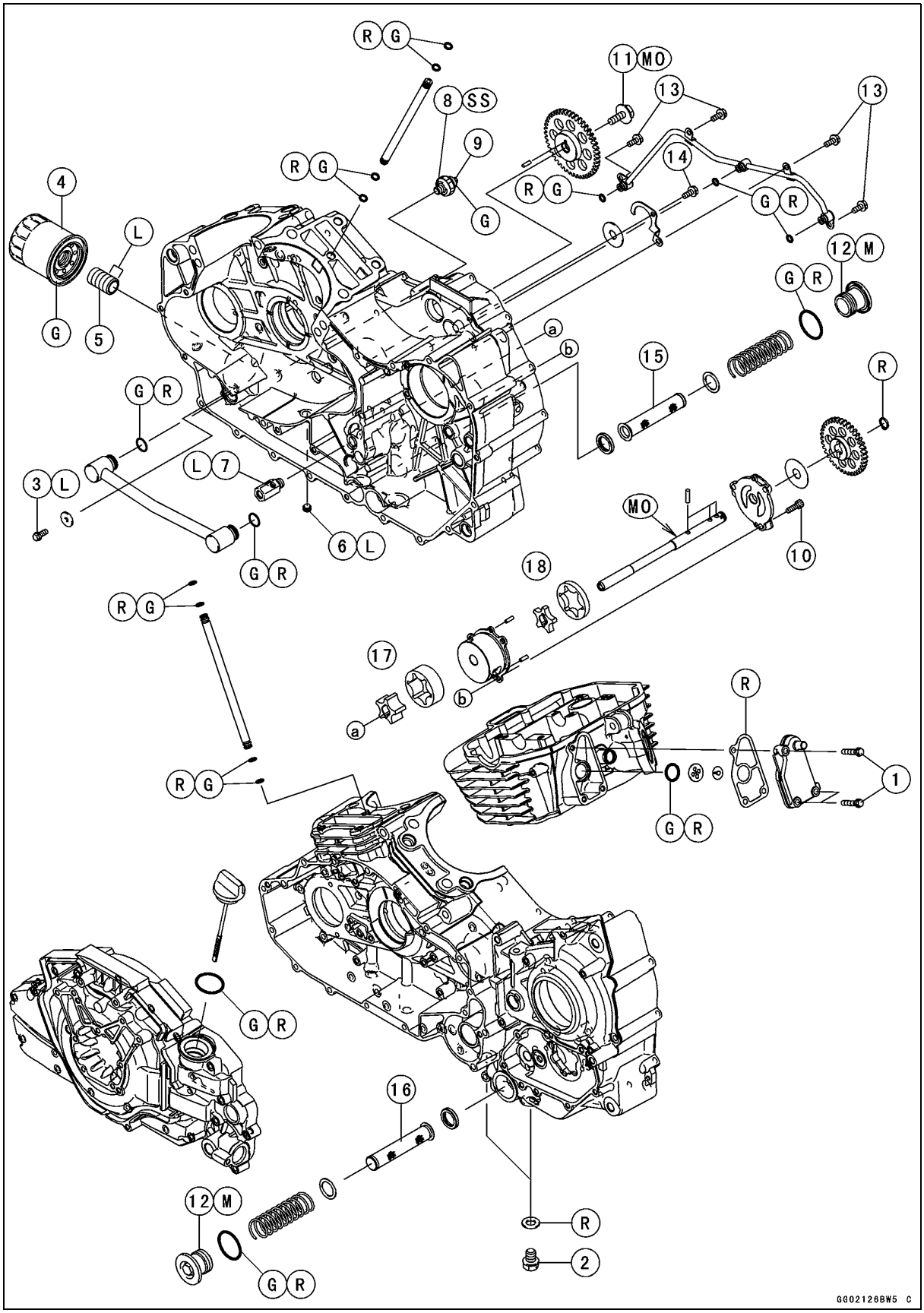

Downloaded from www.vulcanriders-sweden.org

Exploded View

No.	Fastener	Torque			Remarks
		N·m	kgf·m	ft·lb	
1	Breather Check Valve Cover Bolts	9.8	1.0	87 in·lb	
2	Engine Oil Drain Bolts	20	2.0	14	
3	Inside Oil Pipe Retainer Bolt	9.8	1.0	87 in·lb	L
4	Oil Filter	18	1.8	13	
5	Oil Filter Pipe	25	2.5	18	L
6	Oil Passage Plug (PT1/8)	15	1.5	11	L
7	Oil Pressure Relief Valve	15	1.5	11	L
8	Oil Pressure Switch	15	1.5	11	SS
9	Oil Pressure Switch Terminal Bolt	-	-	-	Hand-tighten
10	Oil Pump Cover Bolts	12	1.2	106 in·lb	
11	Oil Pump Drive Gear Bolt	42	4.3	31	MO
12	Oil Screen Plugs	20	2.0	15	M
13	Out Side Oil Pipe Bolts	9.8	1.0	87 in·lb	
14	Torque Limiter Bearing Retainer Bolt	9.8	1.0	87 in·lb	

15. Oil Screen for Feed Pump
16. Oil Screen for Scavenge Pump
17. Scavenge Pump
18. Feed Pump

G: Apply grease.
L: Apply a non-permanent locking agent.
M: Apply Molybdenum disulfide grease.
MO: Apply Molybdenum disulfide oil solution.
(mixture of the engine oil and molybdenum disulfide grease in a weight ratio 10:1)
R: Replacement Parts
SS: Apply silicone sealant.

Downloaded from www.vulcanriders-sweden.org

Engine Oil Flow Chart

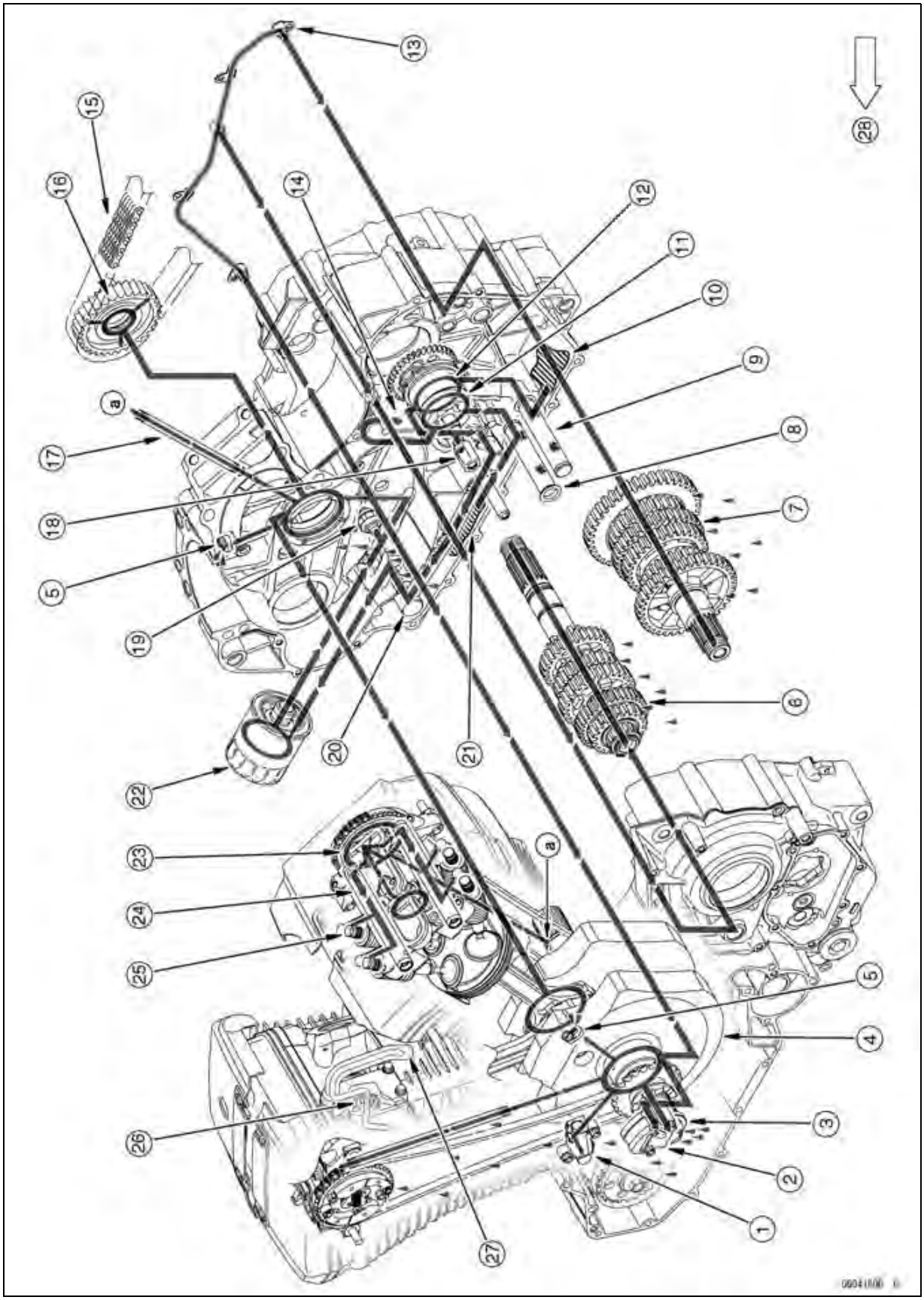

Downloaded from www.vulcanriders-sweden.org

Engine Oil Flow Chart

1. Camshaft Chain Tensioner
2. Balancer Chain Tensioner
3. Alternator Rotor Bolt (For Cooling Stator Coil)
4. Crankshaft
5. Piston Oil Jet
6. Drive Shaft
7. Output Shaft
8. Oil Screen for Scavenge Pump
9. Oil Screen for Feed Pump
10. Oil in Transmission Room
11. Scavenge Pump
12. Feed Pump
13. Outside Oil Pipe
14. To Transmission Room
15. Primary Chain
16. Damper Cam Sprocket
17. Upper Oil Pipe
18. Oil Pressure Relief Valve
19. Oil Pressure Switch
20. Inside Oil Pipe
21. Oil from Crank Room
22. Oil Filter
23. Rocker Case
24. Rocker Shaft
25. HLA (Hydraulic Lash Adjuster)
26. Breather Check Valve
27. To Left Air Cleaner Housing
28. Blowby Gass

Downloaded from www.vulcanriders-sweden.org

7-6 ENGINE LUBRICATION SYSTEM

Specifications

Item	Standard
Engine Oil	
Grade	API SE, SF or SG
	API SH, SJ, SL or SM with JASO MA, MA1 or MA2
Viscosity	SAE 10W-40
Capacity	4.1 L (4.3 US qt) (when filter is not removed)
	4.3 L (4.5 US qt) (when filter is removed)
	5.0 L (5.3 US qt) (when engine is completely disassembled and dry)
Level	Between upper and lower level lines (wait 3 minutes or more after idling or running)
Oil Pressure Measurement	
Oil Pressure	80 ~ 120 kPa (0.8 ~ 1.2 kgf/cm^2, 12 ~ 17 psi) at 2 000 r/min (rpm), oil temperature 90°C (194°F)

Downloaded from www.vulcanriders-sweden.org

Special Tools and Sealant

Outside Circlip Pliers:
57001-144

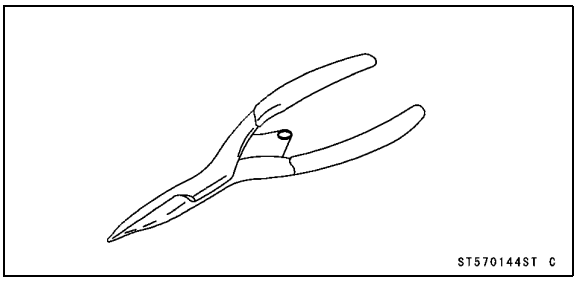

Oil Pressure Gauge Adapter, PT1/8:
57001-1731

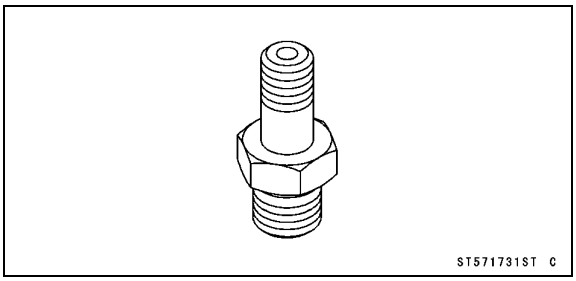

Oil Pressure Gauge, 10 kgf/cm²:
57001-164

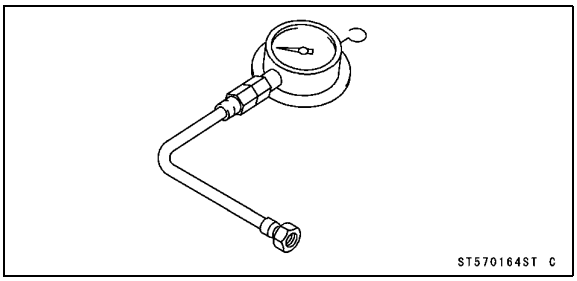

Kawasaki Bond (Silicone Sealant):
56019-120

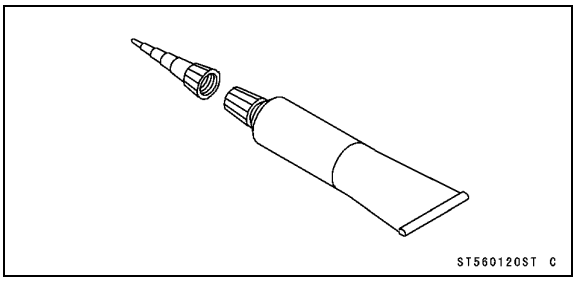

Gear Holder:
57001-1602

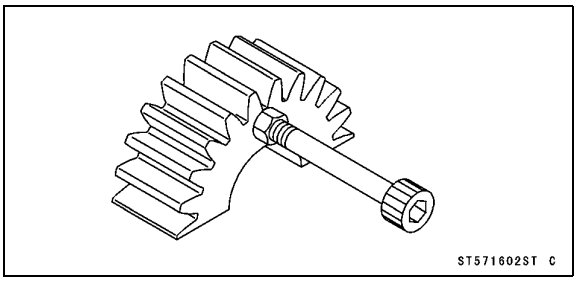

Downloaded from www.vulcanriders-sweden.org

Engine Oil and Oil Filter

Because of the semi-dry sump lubrication system, the engine oil level indicated on the dipstick will fluctuate depending on the motorcycle's position and engine speed when the engine is shut off. To ensure a proper reading of the engine oil level, follow the Oil Level Inspection procedures closely.

⚠ WARNING

Motorcycle operation with insufficient, deteriorated, or contaminated engine oil will cause accelerated wear and may result in engine or transmission seizure, accident, and injury.

Oil Level Inspection

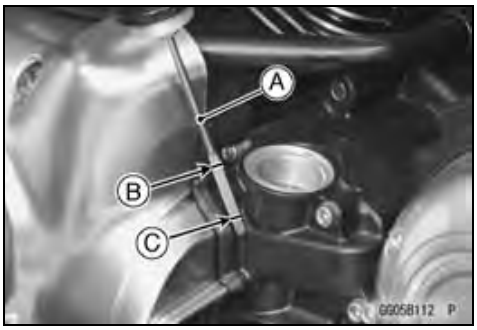

- Situate the motorcycle so that it is vertical.
- Remove the oil filler cap/dipstick [A], wipe it dry and thread in the oil filler cap/dipstick fully clockwise then remove again to check the oil level.
- Check that the engine oil level is between the H (High) [B] and L (Low) [C] levels on the dip stick.

NOTE

○*Situate the motorcycle so that it is perpendicular to the ground.*

○*If the motorcycle has just been used, wait 3 minutes or more for all the oil to drain down.*

○*If the oil has just been changed or the oil temperature is low, start the engine and warm it up thoroughly until the oil temperature in the transmission room goes up about 50°C (122°F). In addition, run the engine* ***at idle speed*** *for about 30 seconds or more.* ***Do not run the engine at high engine speed.*** *This fills the oil filter with oil. Stop the engine, then wait 3 minutes or more until the oil settles.*

CAUTION

Racing the engine before the oil reaches every part can cause engine seizure.
If the engine oil gets extremely low or if the oil pump or oil passages clog up or otherwise do not function properly, the warning indicator light (LED) [A] and oil pressure warning symbol [B] will light. If this light stays on when the engine is running above idle speed, stop the engine immediately and find the cause.

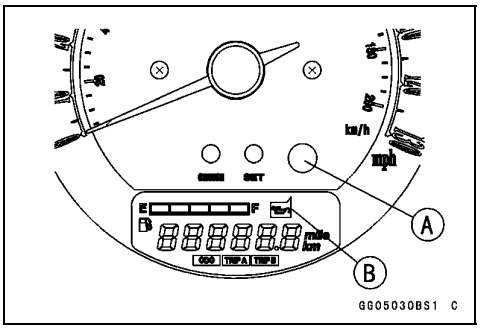

★If the oil level is too high, remove the excess oil, using a syringe or some other suitable device.

★If the oil level is too low, add the correct amount of oil through the oil filler opening. Use the same type and make of oil that is already in the engine.

NOTE

○*If the engine oil type and make are unknown, use any brand of the specified oil to top off the level in preference to running the engine with the oil level low. Then at your earliest convenience, change the oil completely.*

Downloaded from www.vulcanriders-sweden.org

Engine Oil and Oil Filter

Engine Oil Change

- Refer to Engine Oil Change in the Periodic Maintenance Chapter.

Oil Filter Replacement

- Refer to Oil Filter Replacement in the Periodic Maintenance Chapter.

Downloaded from www.vulcanriders-sweden.org

Oil Screen

Oil Screen Removal

Oil Screen for Scavenge Pump

- Remove:
  Alternator Cover (see Alternator Cover Removal in the Electrical System chapter)
  Oil Screen Plug [A]



- Remove:
  Oil Screen [A]
  Spring [B]

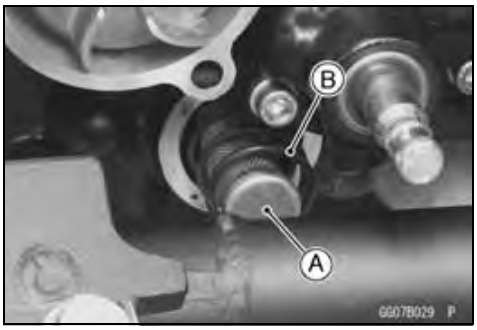

Oil Screen for Feed Pump

- Drain the engine oil (see Engine Oil Change in the Periodic Maintenance chapter).
- Remove:
  Downtube (see Downtube Removal in the Frame chapter)
  Oil Screen Plug [A]

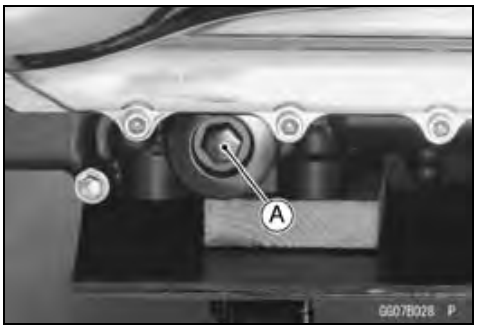

- Remove:
  Oil Screen [A]
  Spring [B]

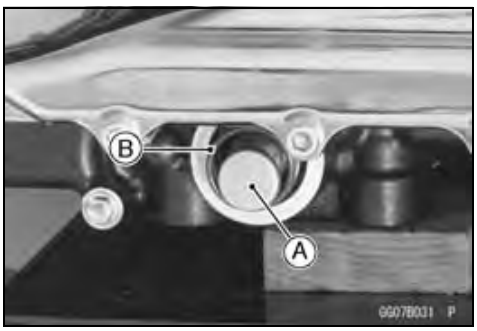

Downloaded from www.vulcanriders-sweden.org

Oil Screen

Oil Screen Installation

NOTE

○*Clean the oil screen thoroughly whenever it is removed for any reason.*

○*While cleaning the screen, check for any metal particles that might indicate internal engine damage.*

● Clean the oil screen with a high-flash point solvent and remove any particles stuck to them.

⚠ WARNING

Clean the screen in a well-ventilated area, and take care that there are no sparks or flame anywhere near the working area. Because of the danger or highly flammable liquids, do not use gasoline or low-flash point solvent.

● Check the screen [A] carefully for any damage, holes, and broken wires.

★If the screen is damaged, replace it.

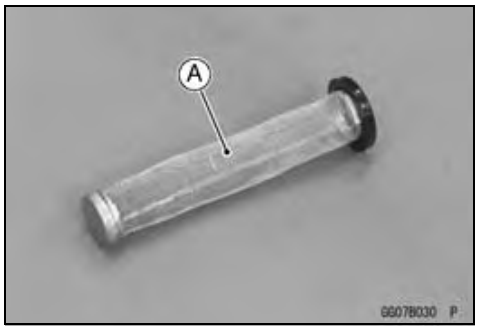

● Install the oil screen so that grommet side [A] faces inward.
Washer [B]
Spring [C]

● Replace the O-ring [D] with a new one.

● Apply grease to the new O-ring.

● Apply molybdenum disulfide grease [E] to the threads of the oil screen plug [F].

● Tighten:

Torque - Oil Screen Plugs: 20 N·m (2.0 kgf·m, 15 ft·lb)

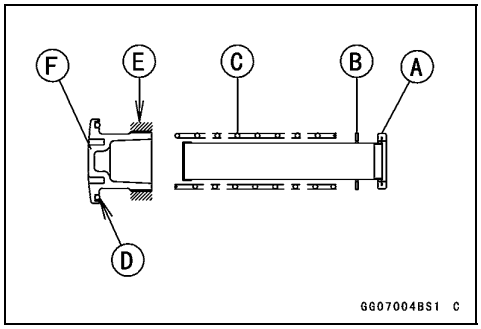

Downloaded from www.vulcanriders-sweden.org

Oil Pressure Relief Valve

Oil Pressure Relief Valve Removal



- Split the crankcase (see Crankcase Splitting in the Crankshaft/Transmission chapter).
- Remove the oil pressure relief valve [A] from the right crankcase half.

Oil Pressure Relief Valve Installation

- Apply a non-permanent locking agent to the threads of the oil pressure relief valve, and tighten it.

CAUTION

Do not apply too much non-permanent locking agent to the threads. This may block the oil passage.

Torque - Oil Pressure Relief Valve: 15 N·m (1.5 kgf·m, 11 ft·lb)

Oil Pressure Relief Valve Inspection

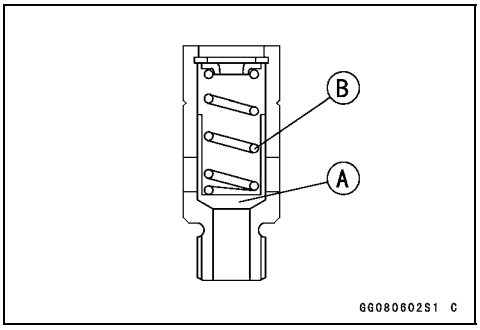

- Remove the oil pressure relief valve (see Oil Pressure Relief Valve Removal).
- Check to see if the valve [A] slides smoothly when pushing it in with a wooden or other soft rod, and see if it comes back to its seat by spring [B] pressure.

NOTE

○*Inspect the valve in its assembled state. Disassembly and assembly may change the valve performance.*

★If any rough spots are found during above inspection, wash the valve clean with a high-flash point solvent and blow out any foreign particles that may be in the valve with compressed air.

⚠ WARNING

Clean the oil pressure relief valve in a well-ventilated area, and take care that there is no spark or flame anywhere near the working area. Because of the danger of highly flammable liquids, do not use gasoline or low-flash point solvent.

★If cleaning does not solve the problem, replace the oil pressure relief valve as an assembly. The oil pressure relief valve is precision made with no allowance for replacement of individual parts.

Downloaded from www.vulcanriders-sweden.org

Oil Pump

Oil Pump Gear Removal

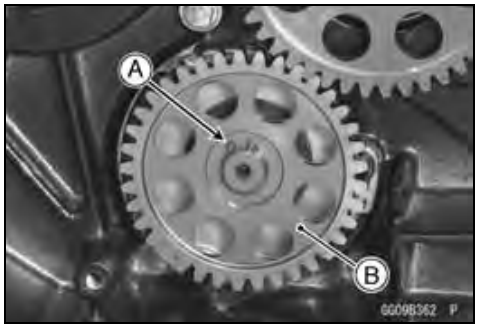

- Remove:
  Clutch (see Clutch Removal in the Clutch chapter)
  Circlip [A]
  Oil Pump Gear [B]

Special Tool - Outside Circlip Pliers: 57001-144

Oil Pump Gear Installation

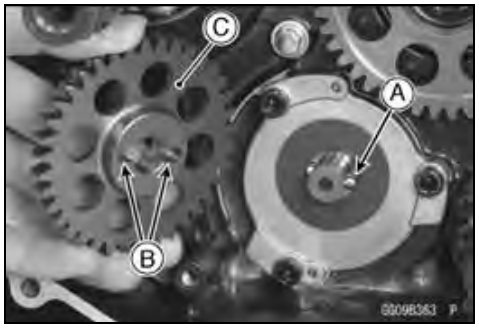

- Check that the pin [A] is in place.
- Fit the pin into the slot [B] of the oil pump gear [C].
- Install a new circlip.

Special Tool - Outside Circlip Pliers: 57001-144

Oil Pump Drive Gear Removal

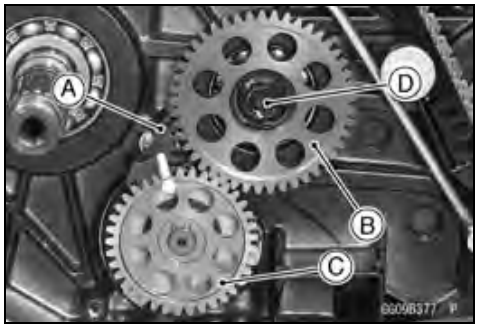

- Remove the clutch (see Clutch Removal in the Clutch chapter).
- Using the gear holder [A], secure the oil pump drive gear [B].

Special Tool - Gear Holder : 57001-1602

○Engage the gear holder to the oil pump gear [C] and oil pump drive gear.

- Remove:
  Oil Pump Drive Gear Bolt [D]
  Oil Pump Drive Gear

Oil Pump Drive Gear Installation



- Check that the pin [A] is in place.
- Fit the pin into the hole [B] of the oil pump drive gear [C].

Downloaded from www.vulcanriders-sweden.org

Oil Pump

- Apply molybdenum disulfide oil solution to the threads and seating surface of the oil pump drive gear bolt [A].
- Using the gear holder [B], secure the oil pump drive gear [C].

  Special Tool - Gear Holder : 57001-1602

- Tighten:

  Torque - Oil Pump Drive Gear Bolt : 42 N·m (4.3 kgf·m, 31 ft·lb)



Oil Pump Removal

- Remove:

  Water Pump Impeller (see Water Pump Removal in the Cooling System chapter)
  Oil Pump Gear (see Oil Pump Gear Removal)
  Pin [A]
  Washer [B]
  Oil Pump Cover Bolts [C]

NOTE

○*The water pump impeller is installed in the end of the oil pump shaft.*

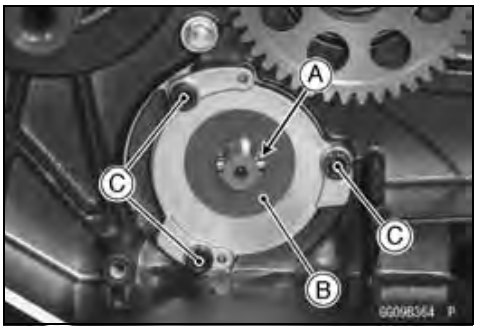

- Pull out the oil pump [A] as an assembly.
- Remove the outer rotor [B] for scavenge pump.

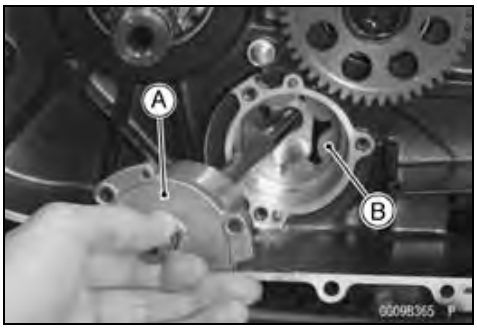

- Remove the oil pump cover [A].

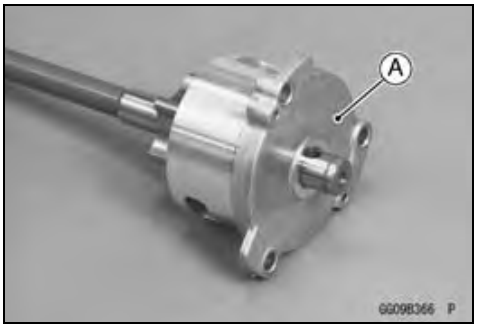

Downloaded from www.vulcanriders-sweden.org

Oil Pump

● Remove:
Pin [A]
Inner Rotor [B] for Feed Pump
Outer Rotor [C] for Feed Pump

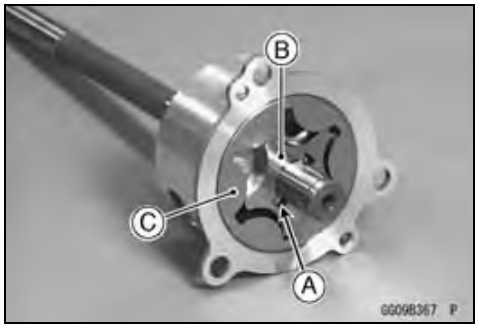

● Remove:
Pin [A]
Inner Rotor [B] for Scavenge Pump
Oil Pump Shaft [C]

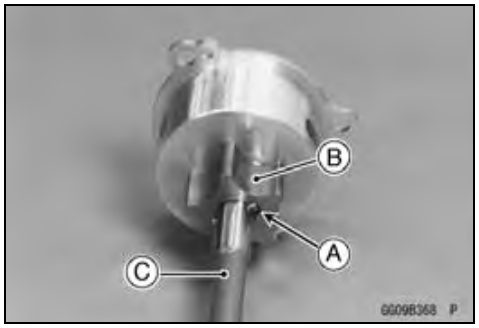

Oil Pump Installation

● Apply molybdenum disulfide oil solution to the portion [A] of the oil pump shaft as shown.
● Assemble the following parts.
Oil Pump Shaft [B]
Pin [C]
Inner Rotor for Scavenge Pump [D]
Oil Pump Body [E]
Inner Rotor [F] for Feed Pump
Outer Rotor [G] for Feed Pump

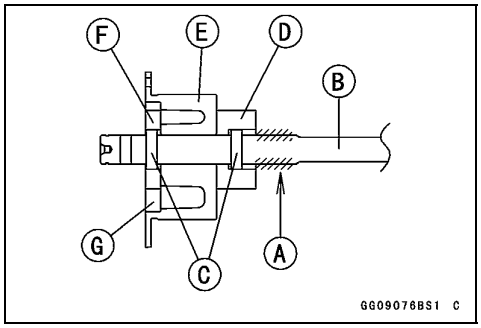

NOTE

○*The scavenge pump rotors are wider than the feed pump rotors.*

● Install the outer rotor [A] for scavenge pump.
○Turn the oil pump shaft so that the inner rotor [B] fits into the outer rotor.

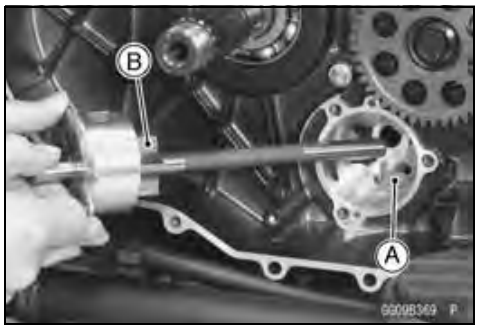

Downloaded from www.vulcanriders-sweden.org

Oil Pump

- Install the dowel pin [A].
- Fit the dowel pin into the hole [B] on the oil pump cover [C].
- Tighten:

Torque - Oil Pump Cover Bolts: 12 N·m (1.2 kgf·m, 106 in·lb)

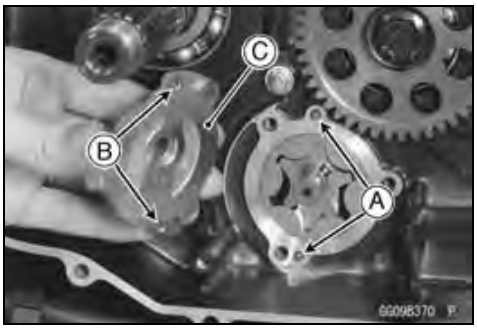

- Be sure to install the washer [A] and pin [B] on the oil pump shaft.
- Install the removed parts (see appropriate chapters).

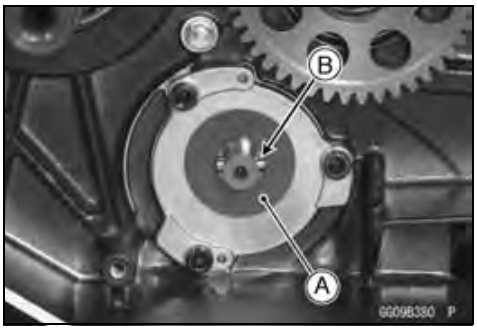

Downloaded from www.vulcanriders-sweden.org

Oil Pressure Measurement

Oil Pressure Measurement

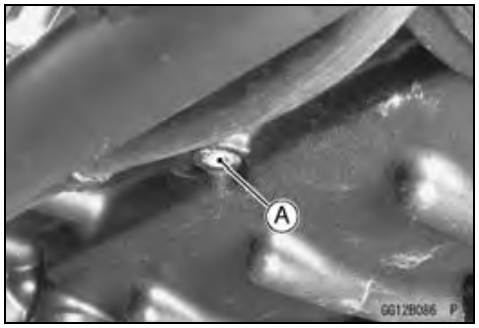

- Remove the oil passage plug (1/8) [A] from the bottom of the right crankcase.

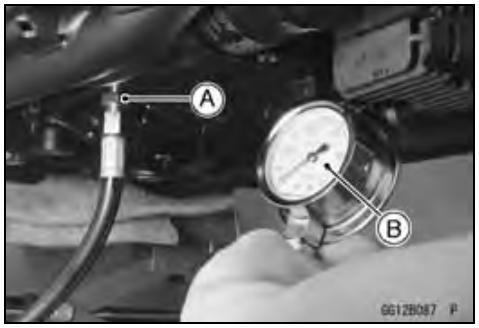

- Attach the adapter [A] and gauge [B] to the plug hole.

Special Tools - Oil Pressure Gauge, 10 kgf/cm²: 57001-164
Oil Pressure Gauge Adapter, PT1/8: 57001 -1731

- Start the engine and warm up the engine.
- Run the engine at the specified speed, and read the oil pressure gauge.

Oil Pressure
Standard:

80 ~ 120 kPa (0.8 ~ 1.2 kgf/cm², 12~ 17 psi) at 2 000 r/min (rpm), oil temperature 90°C (194°F)

★If the reading is much lower than the standard, check the oil pump, relief valve, and/or crankshaft bearing insert wear immediately.

★If the reading is much higher than the standard, check the oil passages for clogging.

- Stop the engine.
- Remove the oil pressure gauge and adapter.

⚠ WARNING

Take care against burns form hot engine oil that will drain through the oil passage when the gauge adapter is removed.

- Apply a non-permanent locking agent to the oil passage plug, and install it.

Torque - Oil Passage Plug (PT1/8): 15 N·m (1.5 kgf·m, 11 ft·lb)

Downloaded from www.vulcanriders-sweden.org

Oil Pressure Switch

Oil Pressure Switch Removal

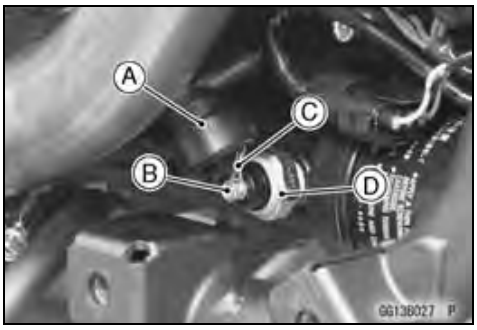

- Drain the engine oil (see Engine Oil Change in the Periodic Maintenance chapter).
- Remove:
  Front Footboard Right (see Front Footboard Removal/Installation in the Frame chapter)
  Front Exhaust Pipe Cover (see Exhaust Pipe Removal in the Engine Top End chapter)
- Slide out the rubber boot [A].
- Loosen the oil pressure switch terminal bolt [B], and remove the switch lead [C].
- Remove the oil pressure switch [D].

Oil Pressure Switch Installation

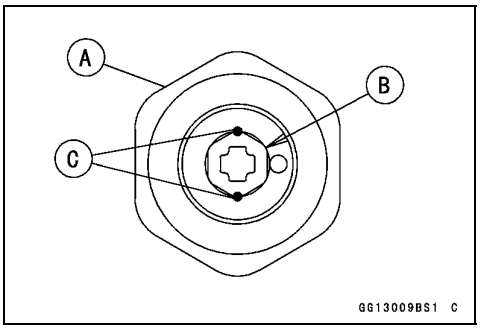

- Apply silicone sealant to the threads of the oil pressure switch [A] and tighten it.

Sealant - Kawasaki Bond (Silicone Sealant): 56019-120

Torque - Oil Pressure Switch: 15 N·m (1.5 kgf·m, 11 ft·lb)

- Apply grease to the switch terminal [B].

NOTE

○*Apply a small amount grease to the terminal so that grease should not close two breather holes [C] for switch diaphragm.*

- Install the switch lead direction upward.
- Tighten:

Torque - Oil Pressure Switch Terminal Bolt: Hand-tighten

- Slide back the rubber boot to the original position.

Downloaded from www.vulcanriders-sweden.org

Oil Pipes

Oil Pipe Removal

Outside Oil Pipe

- Remove:
  Clutch (see Clutch Removal in the Clutch chapter)
  Outside Oil Pipe Bolt [A]
  Torque Limiter Bearing Retainer Bolt [B]
  Torque Limiter Bearing Retainer [C]
  Washer [D]

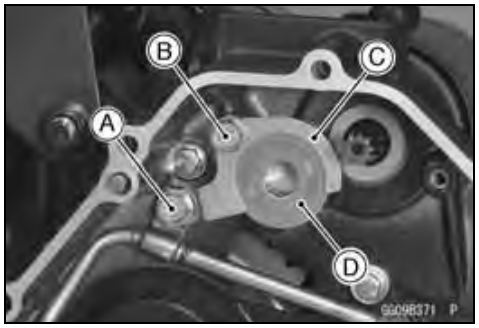

- Remove:
  Outside Oil Pipe Bolts [A]
  Outside Oil Pipe [B]

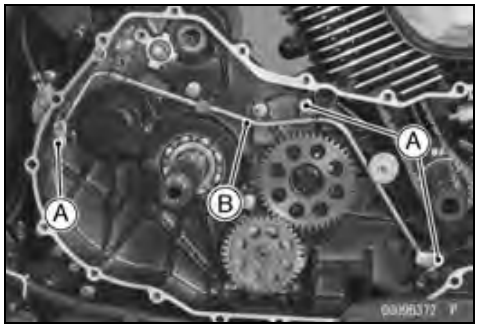

Inside Oil Pipe

- Split the crankcase (see Crankcase Splitting in the Crankshaft/Transmission chapter).
- Remove:
  Inside Oil Pipe Retainer Bolt [A]
  Retainer [B]
  Inside Oil Pipe [C]

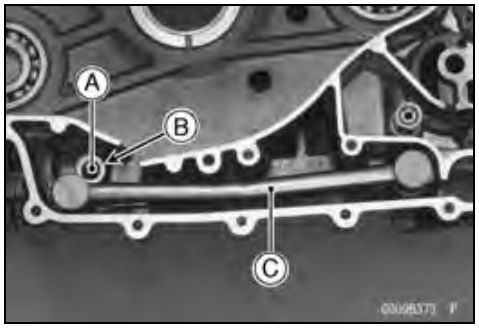

Upper Oil Pipe

- Refer to the Cylinder Removal in the Engine Top End chapter.

Downloaded from www.vulcanriders-sweden.org

Oil Pipes

Oil Pipe Installation

- Refer to the Cylinder Installation in the Crankshaft/Transmission chapter for upper oil pipe installation procedures.
- Replace the O-rings [A] with new ones.
- Apply grease to the O-rings.
  Outside Oil Pipe [B]
  Inside Oil Pipe [C]

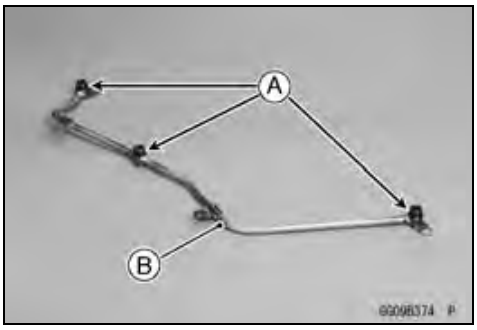

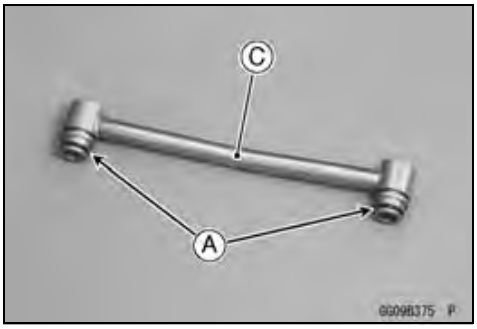

Outside Oil Pipe

- Install the washer and torque limiter bearing retainer.

○Note the position of the washer [A] so that the washer fits onto the tangs [B].

- Tighten:

Torque - Torque Limiter Bearing Retainer Bolt: 9.8 N·m (1.0 kgf·m, 87 in·lb)
Outside Oil Pipe Bolts: 9.8 N·m (1.0 kgf·m, 87 in·lb)



Inside Oil Pipe

- Apply a non-permanent locking agent to the inside oil pipe retainer bolt, and tighten it.

Torque - Inside Oil Pipe Retainer Bolt : 9.8 N·m (1.0 kgf·m, 87 in·lb)

Downloaded from www.vulcanriders-sweden.org

Blowby Gas System

Blowby Gas System Inspection

- Remove the fuel tank (see Fuel Tank Removal in the Fuel System (DFI) chapter).
- Be certain that the breather hose [A] is routed without being flattened or kinked, and is connected correctly to left air cleaner housing.

★If it is not, correct it.



- Remove the left air cleaner housing (see Air Cleaner Housing Removal in the Fuel System (DFI) chapter).
- Inspect the breather hose and the air cleaner drain cap [A] for damage or signs of deterioration.

○The hose and drain cap should not be hard and brittle, nor should be soft or swollen.

★Replace them if any cranks or swelling noticed.

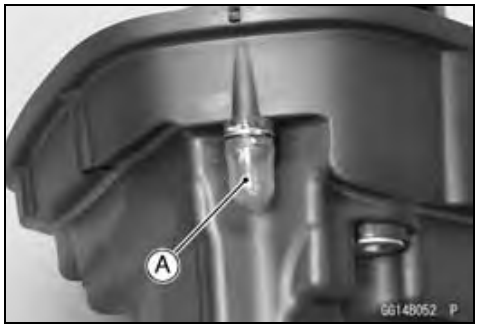

- Remove:
  Breather Check Valve Cover Bolts [A]
  Breather Check Valve Cover [B]

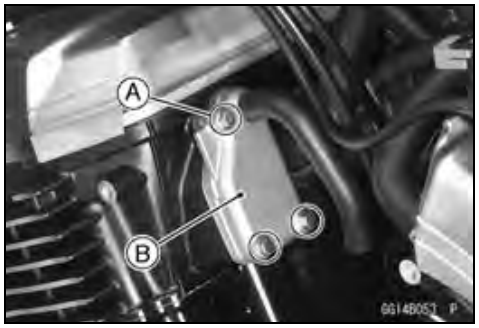

- Remove the breather check valve [A].

○Pinch the check valve with care so that it does not get damage. Do not use tip of screwdriver, metal and the like.



- Visually inspect the breather check valve [A] for any damage.

★Replace the valve, if it is damaged.

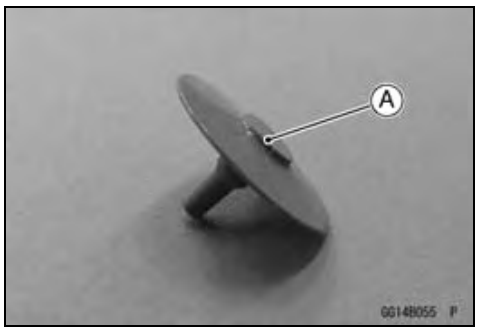

Downloaded from www.vulcanriders-sweden.org

Blowby Gas System

- Replace the O-ring [A] with a new one.
- Apply grease to the new O-ring, install it.



- Install:
  Valve Seat [A]
  Breather Check Valve [B]
- Replace the breather check valve cover gasket with a new one.
- Tighten:

Torque - Breather Check Valve Cover Bolts : 9.8 N·m (1.0 kgf·m, 87 in·lb)

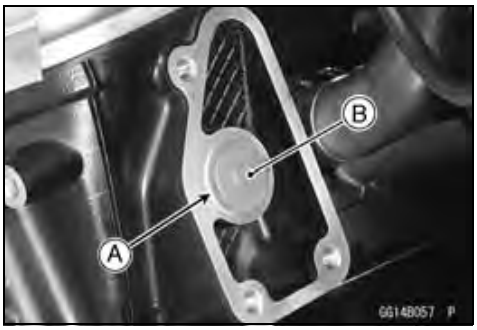

Breather Drain Cleaning

- Refer to the Air Cleaner Oil Draining in the Fuel System (DFI) chapter.

Downloaded from www.vulcanriders-sweden.org

Engine Removal/Installation

Table of Contents

Exploded View 8-2
Special Tools 8-4
Engine Removal/Installation 8-5
    Engine Removal 8-5
    Engine Installation 8-9

Downloaded from www.vulcanriders-sweden.org

Exploded View

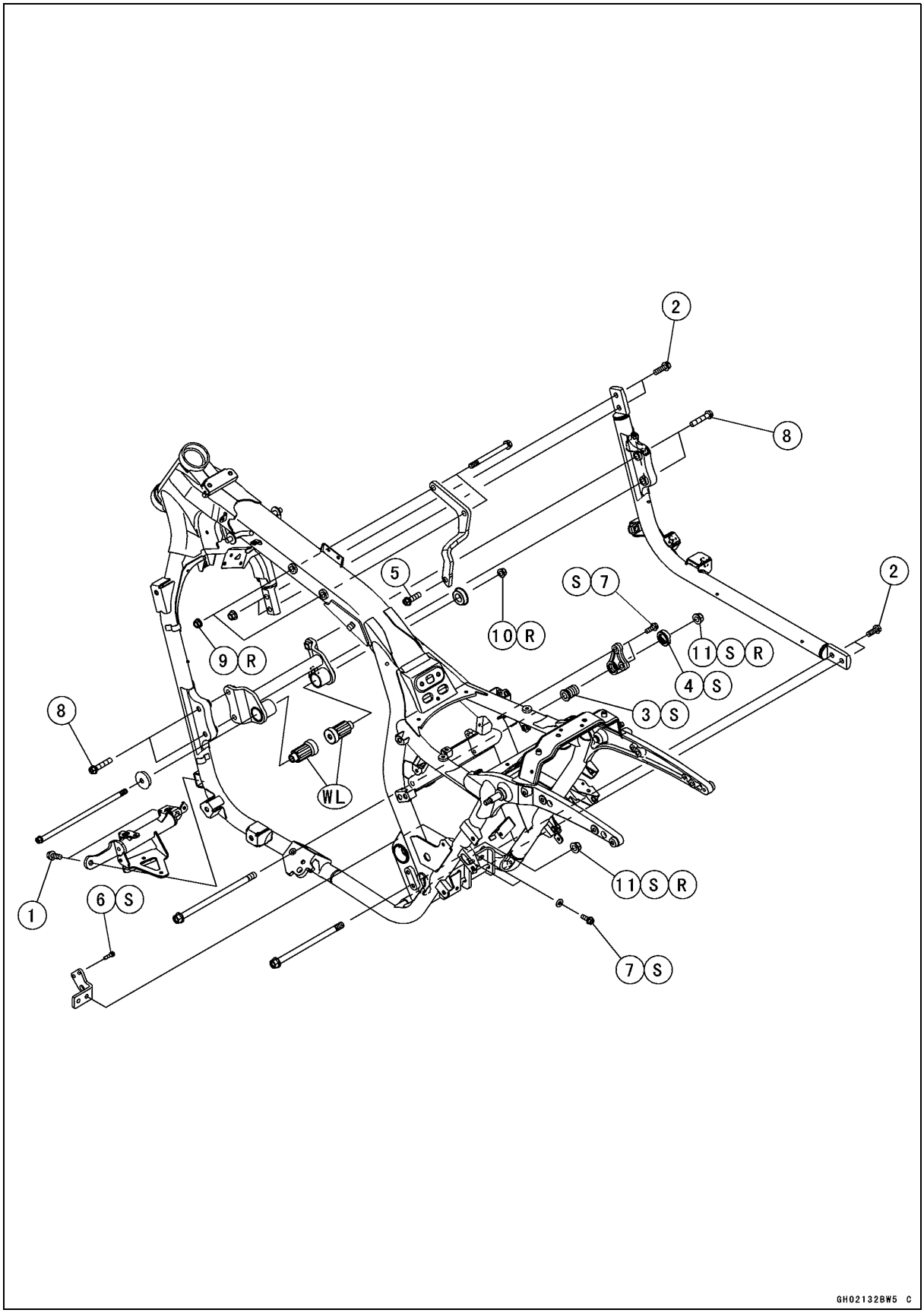

Downloaded from www.vulcanriders-sweden.org

Exploded View

No.	Fastener	Torque			Remarks
		N·m	kgf·m	ft·lb	
1	Cross Pipe Bolts	34	3.5	25	
2	Downtube Bolts	59	6.0	44	
3	Engine Mounting Adjusting Bolt	9.8	1.0	87 in·lb	S
4	Engine Mounting Adjusting Bolt Locknut	49	5.0	36	S
5	Engine Mounting Bolt (M10)	44	4.5	32	
6	Engine Mounting Bracket Bolts (M6)	9.8	1.0	87 in·lb	S
7	Engine Mounting Bracket Bolts (M8)	25	2.5	18	S
8	Engine Mounting Bracket Bolts (M10)	44	4.5	32	
9	Engine Mounting Bracket Nuts (M10)	59	6.0	43	R
10	Engine Mounting Nut (M10)	44	4.5	32	R
11	Engine Mounting Nut (M12)	59	6.0	43	R, S

R: Replacement Parts
S: Follow the specified tightening sequence.
WL: Apply a soap and water solution or rubber lubricant.

Downloaded from www.vulcanriders-sweden.org

Special Tools

Jack:
57001-1238

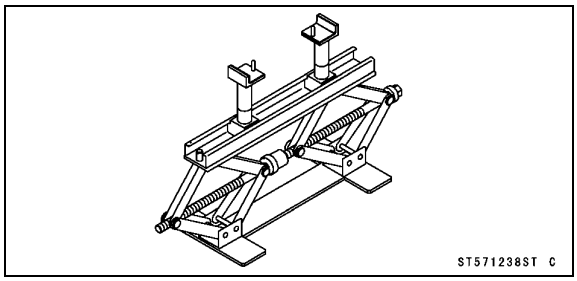

Socket Wrench:
57001-1347

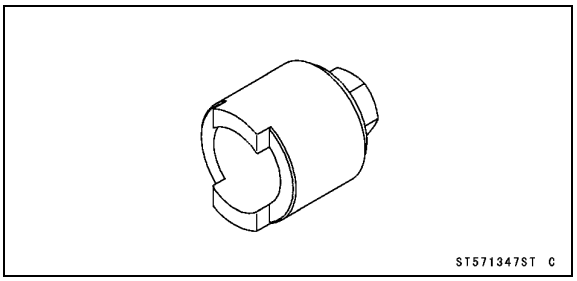

Downloaded from www.vulcanriders-sweden.org

Engine Removal/Installation

Engine Removal



- Raise the rear wheel off the ground using the jack.

  Special Tool - Jack: 57001-1238

- Squeeze the brake lever slowly, and hold it with a band [A].

⚠ WARNING

Be sure to hold the front brake when removing the engine, or the motorcycle may fall over. It could cause an accident and injury.

CAUTION

Be sure to hold the front brake when removing the engine, or the motorcycle may fall over. The engine or the motorcycle could be damaged.

- Drain:
  Coolant (see Coolant Change in the Periodic Maintenance chapter)
  Engine Oil (see Engine Oil Change in the Periodic Maintenance chapter)
- Remove:
  Battery Cables (see Battery Removal in the Electrical System chapter)
  Fuel Tank (see Fuel Tank Removal in the Fuel System (DFI) chapter)
  Right Air Cleaner Housing (see Right Air Cleaner Housings Removal in the Fuel System (DFI) chapter)
  Throttle Cable (see Throttle Body Assy Removal in the Fuel System (DFI) chapter)
  Exhaust Pipe (see Exhaust Pipe Removal in the Engine Top End chapter)
  Radiator (see Radiator Removal in the Cooling System chapter)
  Thermostat Housing (see Thermostat Removal in the Cooling System chapter)
  Ignition Coil #1 and #2 (see Ignition Coil Removal in the Electrical System chapter)
  Front Footboards (see Front Footboard Removal/Installation in the Frame chapter)
  Engine Pulley (see Engine Pulley Removal in the Final Drive chapter)

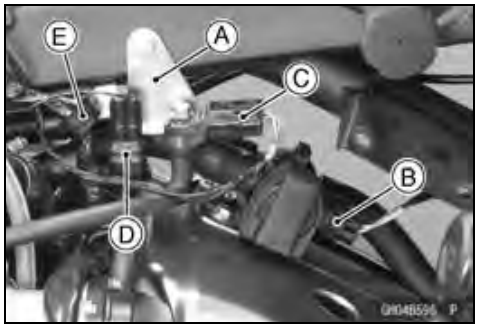

- Remove the connector bracket [A].
- Disconnect:
  Air Switching Valve Connector [B]
  Inlet Air Pressure Sensor Connector [C]
  Cruise Control Cancel Switch Connector [D]
- Open the clamp [E] to free the lead.

Downloaded from www.vulcanriders-sweden.org

Engine Removal/Installation

- Remove:
  Vacuum Hose [A]
  Vacuum Hoses [B] (CAL and SEA Models)
- Disconnect the injector connectors [C].

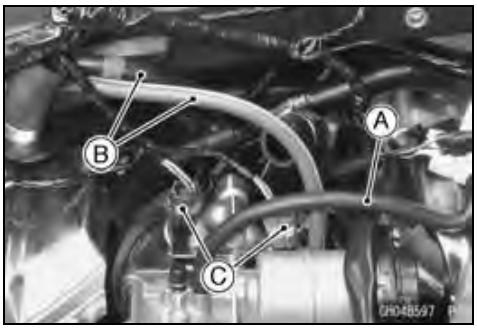

- Disconnect the throttle body connectors [A].



- Disconnect:
  Crankshaft Sensor Lead Connector [A]
  Alternator Lead Connectors [B]

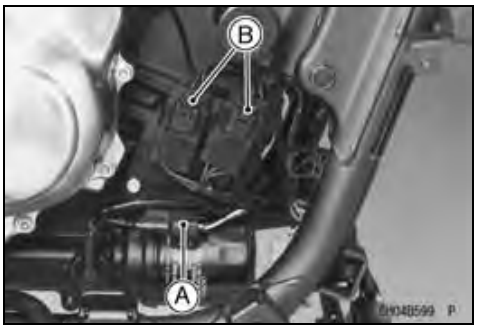

- Remove:
  Engine Ground Cable Terminal Bolt [A]
  Clamp [B] (CAL and SEA Models)

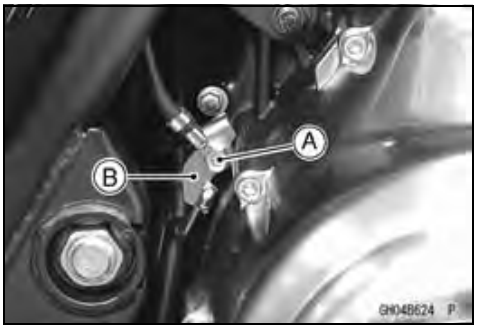

- Remove the brake hose bracket bolt [A].



Downloaded from www.vulcanriders-sweden.org

Engine Removal/Installation

- Remove the side stand switch lead connector [A] from the brake hose clamp [B].

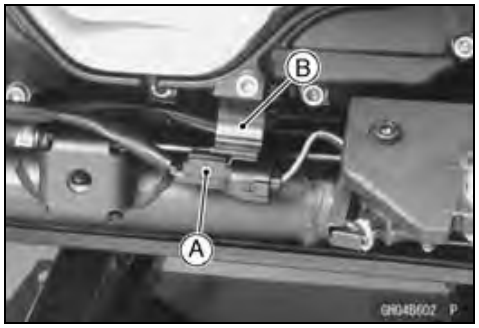

- Remove the starter motor cable [A].
- Open the clamp [B], and free the leads.
- Disconnect:
  Speed Sensor Connector [C]
  Gear Position Switch Lead Connector [D]

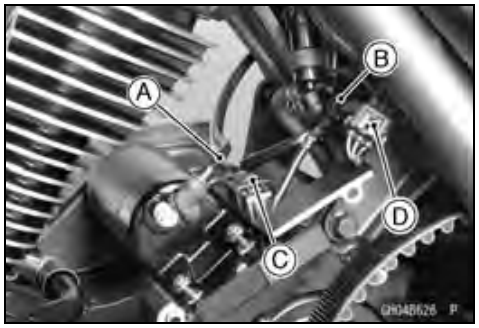

- Support the engine with a commercially available stand [A].

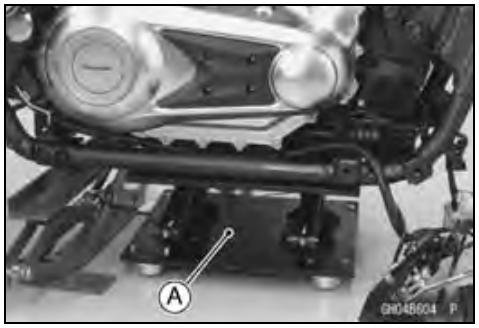

- Remove:
  Engine Mounting Bracket Bolts and Nuts (M10) [A]
  Engine Mounting Bolt (M10) [B]
  Upper Engine Mounting Bracket [C]

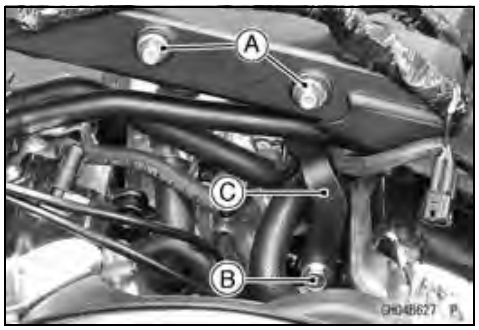

- Remove:
  Engine Mounting Bolt [A] and Nut
  Engine Mounting Bracket Bolts (M10) [B] (Both Sides)
  Front Engine Mounting Bracket [C]

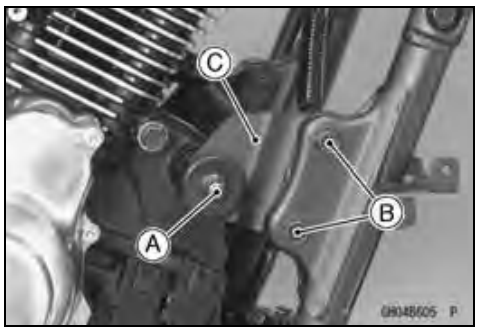

Downloaded from www.vulcanriders-sweden.org

Engine Removal/Installation

- Remove the engine mounting bolt and nut (M12) [A].



- Using the socket wrench [A], loosen the engine mounting adjusting bolt locknut [B].

  Special Tool - Socket Wrench: 57001-1347



- Using the Hexagon Wrench, turn the engine mounting adjusting bolt [A] counterclockwise to make the gap between the engine and adjusting bolt.
- Remove:
  Engine Mounting Bracket Bolts (M8) [B]
  Rear Engine Mounting Bracket (Upper) [C]

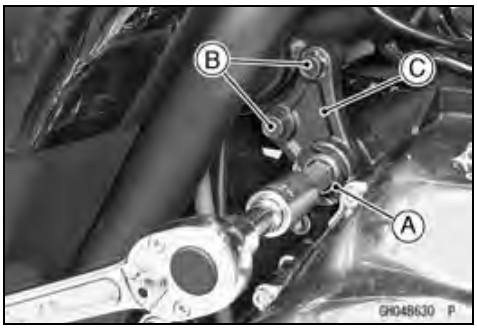

- Remove:
  Engine Mounting Bracket Bolts (M6) [A]
  Engine Mounting Bolt and Nut (M12) [B]

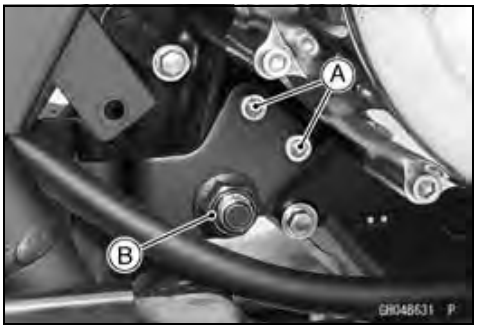

- Remove:
  Engine Mounting Bracket Bolts (M8) [A] and Washers
  Rear Engine Mounting Bracket (Lower)

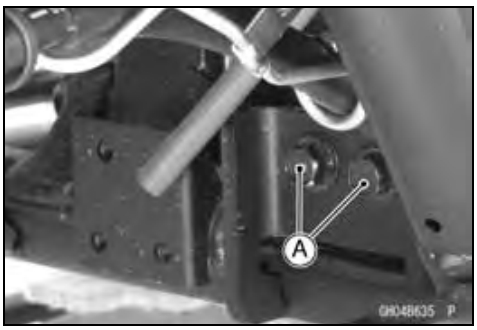

Downloaded from www.vulcanriders-sweden.org

Engine Removal/Installation

- Remove the downtube (see Downtube Removal in the Frame chapter).
- Remove the drive belt [A] from the output shaft [B].

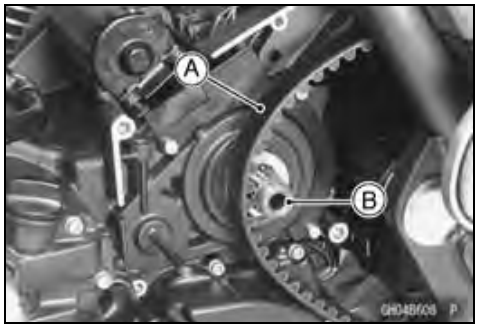

- Remove the engine [A] from the motorcycle right side.



Engine Installation

- Support the engine with a suitable stand.
- Replace the following nuts with new ones (see Exploded View section).
  Engine Mounting Bracket Nuts (M10)
  Engine Mounting Nuts (M10)
  Engine Mounting Nuts (M20)
- Install the engine mounting bolts and nuts, following the specified installing sequence.

○First, Install the rear engine mounting bracket (lower) [A] to the engine, and tighten the engine mounting bracket bolts (M6) [B].

Torque - Engine Mounting Bracket Bolts (M6): 9.8 N·m (1.0 kgf·m, 87 in·lb)

○Second, tighten the engine mounting bracket bolts (M8) [C] and washers temporarily.

○Third, install the rear engine mounting bracket (upper) [D], and tighten the engine mounting bracket bolts (M8) [E].

Torque - Engine Mounting Bracket Bolts (M8): 25 N·m (2.5 kgf·m, 18 ft·lb)

○Forth, turn the engine adjusting bolt [F] until the clearance between the bolt head and crankcase [G] come to zero mm (zero in.).

Torque - Engine Mounting Adjusting Bolt: 9.8 N·m (1.0 kgf·m, 87 in·lb)



○Fifth, tighten the adjusting bolt locknut [H], using the socket wrench.

Special Tool - Socket Wrench: 57001-1347

Torque - Engine Mounting Adjusting Bolt Locknut: 49 N·m (5.0 kgf·m, 36 ft·lb)

○Sixth, tighten the engine mounting nut (M12) (upper) [I].

Torque - Engine Mounting Nut (M12): 59 N·m (6.0 kgf·m, 43 ft·lb)

Downloaded from www.vulcanriders-sweden.org

Engine Removal/Installation

○Seventh, tighten the engine mounting nut (M12) (lower) [J].

Torque - Engine Mounting Nut (M12): 59 N·m (6.0 kgf·m, 43 ft·lb)

○Eighth, tighten the engine mounting bracket bolts [C] again to the specified torque.

Torque - Engine Mounting Bracket Bolts (M8): 25 N·m (2.5 kgf·m, 18 ft·lb)

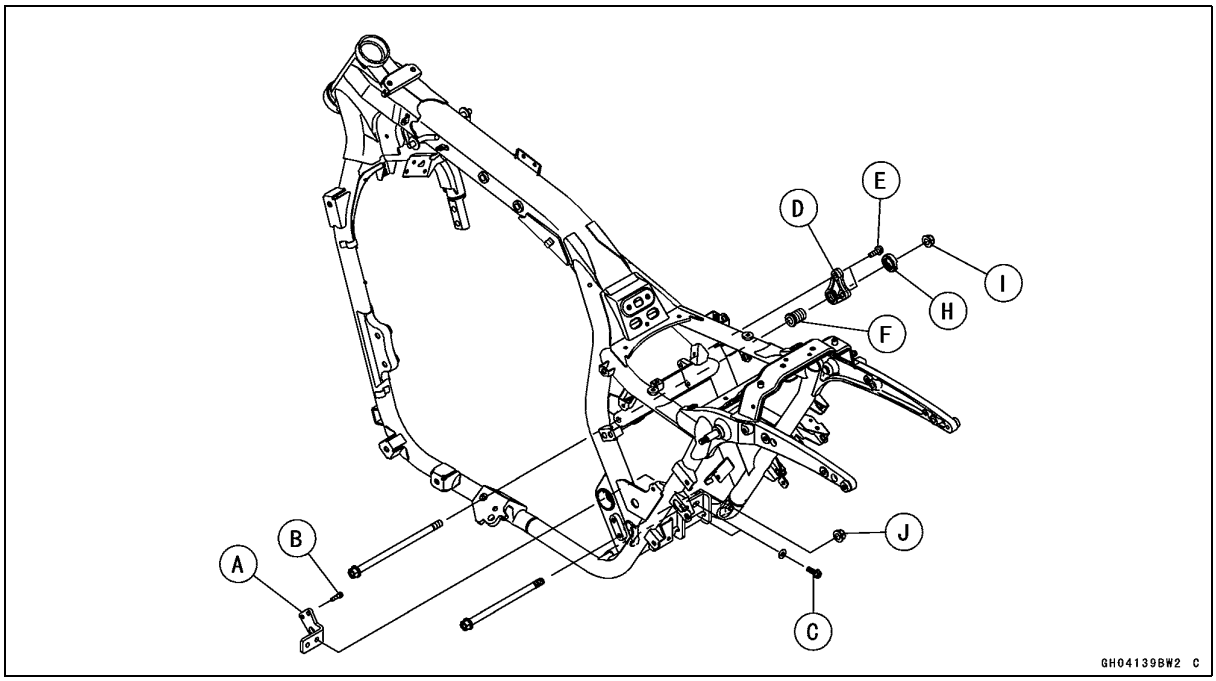

○Lastly, remove the engine stand, and tighten the other engine mounting bolts and nuts.

Torque - Downtube Bolts: 59 N·m (6.0 kgf·m, 44 ft·lb)
Engine Mounting Bracket Bolts (M10): 44 N·m (4.5 kgf·m, 32 ft·lb)
Engine Mounting Bracket Nuts (M10): 59 N·m (6.0 kgf·m, 43 ft·lb)
Engine Mounting Bolt (M10): 44 N·m (4.5 kgf·m, 32 ft·lb)
Engine Mounting Nut (M10): 44 N·m (4.5 kgf·m, 32 ft·lb)
Cross Pipe Bolts: 34 N·m (3.5 kgf·m, 25 ft·lb)

● When installing the upper engine mounting bracket [A], fit the lower end [B] of the bracket to the cylinder block [C].

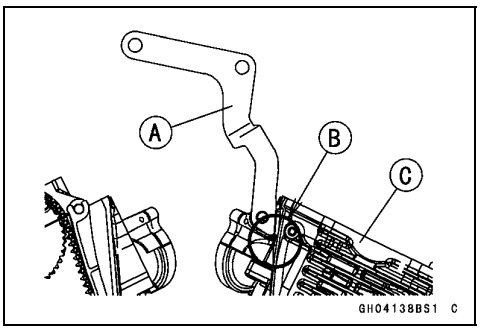

Downloaded from www.vulcanriders-sweden.org

Engine Removal/Installation

- Run the leads, cables and hoses correctly (see Cable, Wire and Hose Routing section in the Appendix chapter).
- Install the removed parts.
- Adjust:
  Throttle Cables (see Throttle Control System Inspection in the Periodic Maintenance chapter)
  Drive Belt (see Belt Deflection inspection in the Periodic Maintenance chapter)
- Fill the engine with engine oil (see Engine Oil Change in the Periodic Maintenance chapter).
- Fill the engine with coolant and bleed the air from the cooling system (see Coolant Change in the Periodic Maintenance chapter).

Downloaded from www.vulcanriders-sweden.org

Downloaded from www.vulcanriders-sweden.org

Crankshaft/Transmission

Table of Contents

Exploded View 9-2
Specifications 9-6
Special Tools and Sealants 9-8
Crankcase 9-9
  Crankcase Splitting 9-9
  Crankcase Assembly 9-11
Crankshaft and Connecting Rods 9-16
  Crankshaft Removal 9-16
  Crankshaft Installation 9-16
  Connecting Rod Removal 9-16
  Connecting Rod Installation 9-17
  Crankshaft/Connecting Rod Cleaning 9-18
  Connecting Rod Bend 9-18
  Connecting Rod Twist 9-19
  Connecting Rod Big End Side Clearance 9-19
  Connecting Rod Big End Bearing Insert/Crankpin Wear 9-19
  Crankshaft Side Clearance 9-21
  Crankshaft Runout 9-21
  Crankshaft Main Bearing/Main Journal Wear 9-22
Balancer 9-23
  Balancer Mechanism Removal 9-23
  Balancer Mechanism Installation 9-24
  Balancer Shaft Removal 9-27
  Balancer Shaft Installation 9-27
Starter Clutch 9-28
  Starter Clutch Removal 9-28
  Starter Clutch Installation 9-28
  Starter Clutch Disassembly 9-28
  Starter Clutch Assembly 9-28
  Starter Clutch Inspection 9-28
Torque Limiter 9-30
  Torque Limiter Removal 9-30
  Torque Limiter Installation 9-30
  Torque Limiter Inspection 9-30
Transmission 9-31
  Transmission Shaft and Shift Fork Removal 9-31
  Transmission Shaft and Shift Fork Removal 9-31
  Transmission Shaft Disassembly 9-31
  Transmission Shaft Assembly 9-32
  Shift Drum Removal 9-34
  Shift Drum Installation 9-34
  Shift Drum Disassembly 9-34
  Shift Drum Assembly 9-35
  Shift Fork Bending 9-36
  Shift Fork/Gear Groove Wear 9-36
  Shift Fork Guide Pin/Drum Groove Wear 9-36
  Gear Dog and Gear Dog Hole Damage 9-36
External Shift Mechanism 9-37
  Shift Pedal Removal 9-37
  Shift Pedal Installation 9-37
  External Shift Mechanism Removal 9-39
  External Shift Mechanism Installation 9-40
Ball Bearing, Needle Bearing and Oil Seal 9-44
  Bearing and Oil Seal Installation 9-44
  Bearing Wear 9-45
  Oil Seal Inspection 9-46

Downloaded from www.vulcanriders-sweden.org

Exploded View

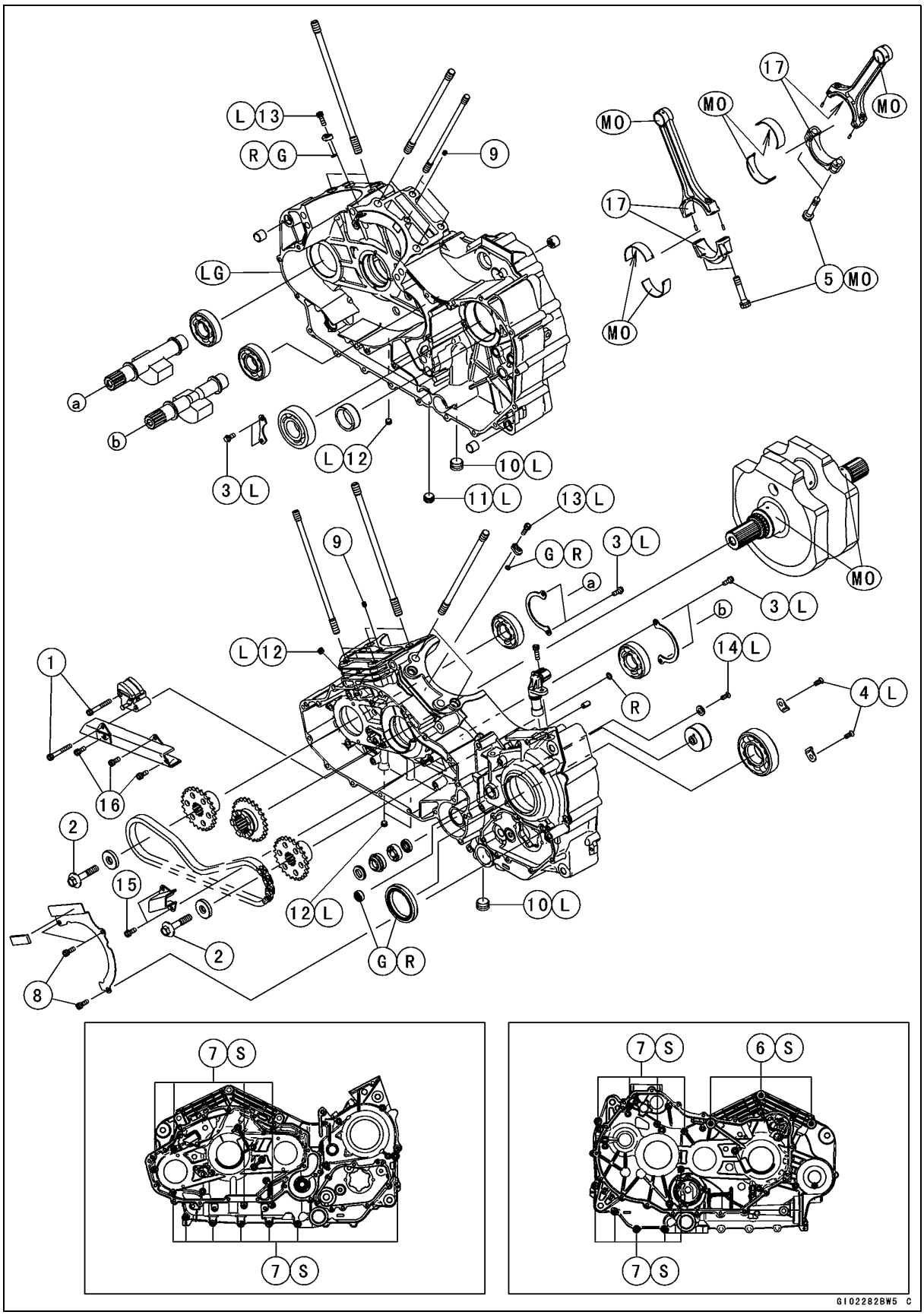

Downloaded from www.vulcanriders-sweden.org

Exploded View

No.	Fastener	Torque			Remarks
		N·m	kgf·m	ft·lb	
1	Balancer Chain Tensioner Bolts	12	1.2	106 in·lb	
2	Balancer Sprocket Bolts	83	7.0	51	
3	Ball Bearing Retainer Bolts	9.8	1.0	87 in·lb	L
4	Ball Bearing Retainer Screws	9.8	1.0	87 in·lb	L
5	Connecting Rod Big End Bolts	60	6.1	44	MO
6	Crankcase Bolts (M10)	39	4.0	29	S
7	Crankcase Bolts (M6)	12	1.2	106 in·lb	S
8	Engine Pulley Plate Bolts	12	1.2	106 in·lb	
9	Oil Nozzles	3.9	0.40	34 in·lb	
10	Oil Passage Plugs (PT1/2)	20	2.0	15	L
11	Oil Passage Plug (PT3/8)	20	2.0	15	L
12	Oil Passage Plugs (PT1/8)	15	1.5	11	L
13	Piston Oil Jet Bolts	6.9	0.70	61 in·lb	L
14	Race Retainer Screw	9.8	1.0	87 in·lb	L
15	Upper Balancer Chain Guide Bolts	12	1.2	106 in·lb	
16	Lower Balancer Chain Guide Bolts	12	1.2	106 in·lb	

17. Do not apply any grease or oil.
G: Apply grease.
L: Apply a non-permanent locking agent.
LG: Apply liquid gasket.
MO: Apply molybdenum disulfide oil solution.
(mixture of the engine oil and molybdenum disulfide grease in a weight ratio 10 : 1)
R: Replacement Parts
S: Follow the specified tightening sequence.

Downloaded from www.vulcanriders-sweden.org

Exploded View

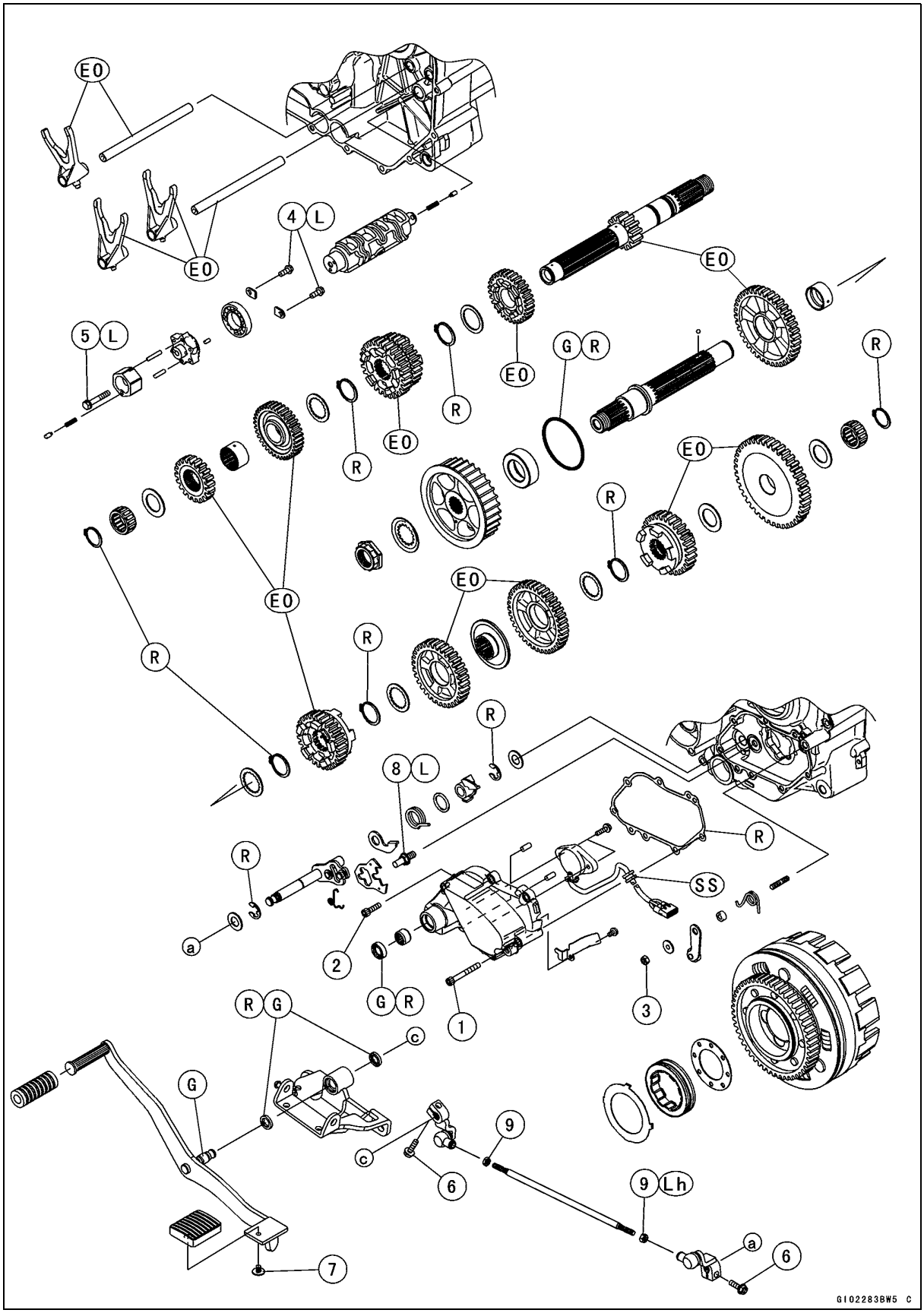

Downloaded from www.vulcanriders-sweden.org

Exploded View

No.	Fastener	Torque			Remarks
		N·m	kgf·m	ft·lb	
1	External Shift Mechanism Cover Bolts (L = 50 mm)	12	1.2	106 in·lb	
2	External Shift Mechanism Cover Bolts (L = 22 mm)	12	1.2	106 in·lb	
3	Gear Positioning Lever Nut	7.8	0.80	69 in·lb	
4	Shift Drum Bearing Retainer Bolts	9.8	1.0	87 in·lb	L
5	Shift Drum Cam Bolt	12	1.2	106 in·lb	L
6	Shift Lever Bolts	12	1.2	106 in·lb	
7	Shift Pedal Pad Screw	6.9	0.70	61 in·lb	
8	Shift Shaft Return Spring Pin	39	4.0	29	L
9	Tie-Rod Locknuts	9.8	1.0	87 in·lb	Lh (1)

EO: Apply engine oil.
G: Apply grease.
L: Apply a non-permanent locking agent.
Lh: Left-hand Threads
R: Replacement Parts
SS: Apply silicone sealant.

Downloaded from www.vulcanriders-sweden.org

Specifications

Item	Standard	Service Limit
Crankcase, Crankshaft and Connecting Rods		
Connecting Rod Bend	– – –	TIR 0.2/100 mm (0.008/3.94 in.)
Connecting Rod Twist	– – –	TIR 0.2/100 mm (0.008/3.94 in.)
Connecting Rod Big End Side Clearance	0.08 ~ 0.30 mm (0.003 ~ 0.012 in.)	0.5 mm (0.02 in.)
Connecting Rod Big End Bearing Insert/Crankpin Clearance	0.026 ~ 0.056 mm (0.0010 ~ 0.0022 in.)	0.09 mm (0.035 in.)
Crankpin Diameter:	51.981 ~ 52.000 mm (2.0465 ~ 2.0472 in.)	51.97 mm (2.0461 in.)
Marking:		
None	51.981 ~ 51.991 mm (2.0465 ~ 2.0468 in.)	– – –
○	51.992 ~ 52.000 mm (2.0469 ~ 2.0472 in.)	– – –
Connecting Rod Big End Inside Diameter:	55.000 ~ 55.019 mm (2.1654 ~ 2.1611 in.)	– – –
Marking:		
None	55.000 ~ 55.010 mm (2.1654 ~ 2.1657 in.)	– – –
○	55.011 ~ 55.019 mm (2.1658 ~ 2.1661 in.)	– – –
Connecting Rod Big End Bearing Insert Thickness:		
Brown	1.483 ~ 1.487 mm (0.5838 ~ 0.5854 in.)	– – –
Black	1.487 ~ 1.491 mm (0.5854 ~ 0.5870 in.)	– – –
Blue	1.491 ~ 1.495 mm (0.5870 ~ 0.5886 in.)	– – –
Crankshaft Side Clearance	0.05 ~ 0.35 mm (0.002 ~ 0.014 in.)	0.55 mm (0.022 in.)
Crankshaft Web Length	106.85 ~ 106.95 mm (4.2067 ~ 4.2106 in.)	106.6 mm (4.197 in.)
Crankshaft Runout	TIR 0.06 mm (0.0024 in.) or less	TIR 0.15 mm (0.0059 in.)
Crankshaft Main Journal Diameter	52.986 ~ 53.000 mm (2.0861 ~ 2.0866 in.)	52.96 mm (2.085 in.)
Crankcase Main Bearing Inside Diameter	53.030 ~ 53.049 mm (2.0878 ~ 2.0885 in.)	53.08 mm (2.090 in.)
Transmission		
Shift Fork Ear Thickness	6.9 ~ 7.0 mm (0.272 ~ 0.276 in.)	6.8 mm (0.268 in.)
Gear Groove Width	7.05 ~ 7.15 mm (0.278 ~ 0.281 in.)	7.25 mm (0.285 in.)
Shift Fork Guide Pin Diameter	5.9 ~ 6.0 mm (0.232 ~ 0.236 in.)	5.8 mm (0.228 in.)
Shift Drum Groove Width	6.05 ~ 6.20 mm (0.238 ~ 0.244 in.)	6.3 mm (0.248 in.)

Downloaded from www.vulcanriders-sweden.org

Specifications

Connecting Rod Big End Bearing Insert Selection

Con-rod Big End Inside Diameter Marking	Crankpin Diameter Marking	Bearing Insert	
		Size Color	Part Number
None	○	Brown	92139-0227
None	None	Black	92139-0226
○	○		
○	None	Blue	92139-0225

Downloaded from www.vulcanriders-sweden.org

Special Tools and Sealants

Outside Circlip Pliers:
57001-144

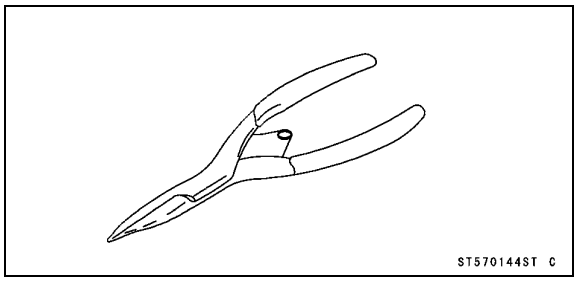

Rotor Holder:
57001-1726

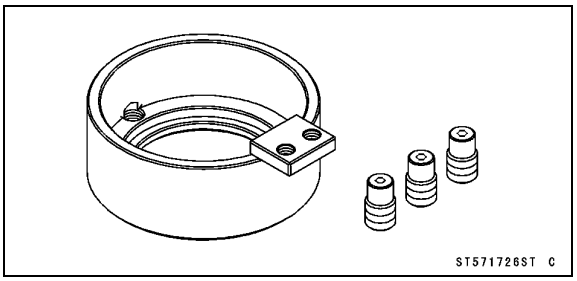

Bearing Driver Set:
57001-1129

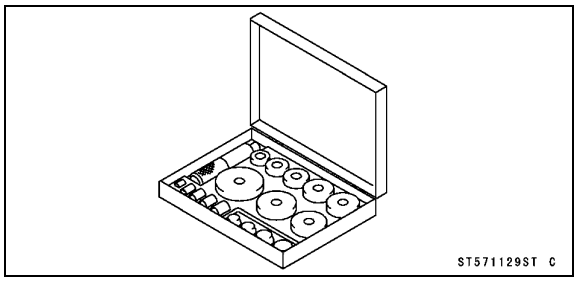

Kawasaki Bond (Silicone Sealant):
92104-0004

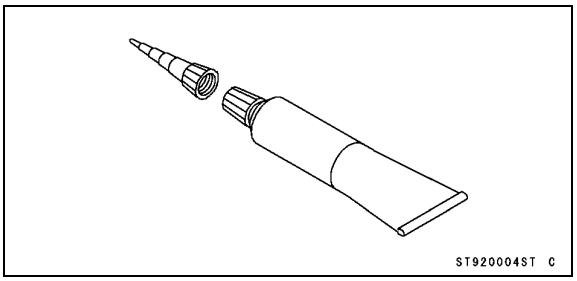

Grip:
57001-1591

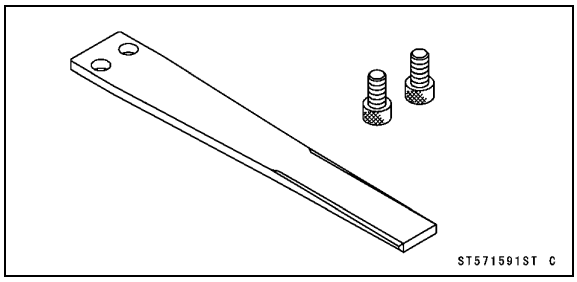

Kawasaki Bond (Liquid Gasket - Black):
92104-1064

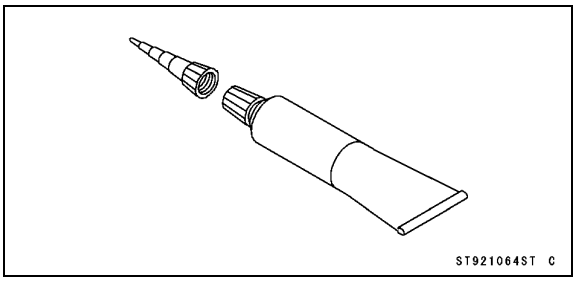

Downloaded from www.vulcanriders-sweden.org

Crankcase

Crankcase Splitting

- Remove the engine (see Engine Removal in the Engine Removal/Installation chapter).
- Set the engine on a clean surface and hold the engine steady while parts are being removed.
- Remove:

  Clutch (see Clutch Removal in the Clutch chapter)
  Balancer Mechanism (see Balancer Mechanism Removal)
  Cylinders (see Cylinder Removal in the Engine Top End chapter)
  Pistons (see Piston Removal in the Engine Top End chapter)
  Camshaft Chains (see Camshaft Chain Removal in the Engine Top End chapter)
  Oil Pump Drive Gear (see Oil Pump Drive Gear Removal in the Engine Lubrication System chapter)
  Oil Pump (see Oil Pump Removal in the Engine Lubrication System chapter)
  Oil Screens (see Oil Screen Removal in the Engine Lubrication System chapter)
  Starter Motor (see Starter Motor Removal in the Electrical System chapter)
  External Shift Mechanism (see External Shift Mechanism Removal)

- Remove the collar [A] on the output shaft.
- Remove the O-ring [B].

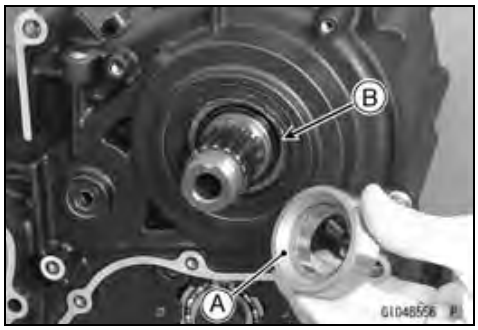

Downloaded from www.vulcanriders-sweden.org

Crankcase

● Remove the left crankcase bolts (11) [A].

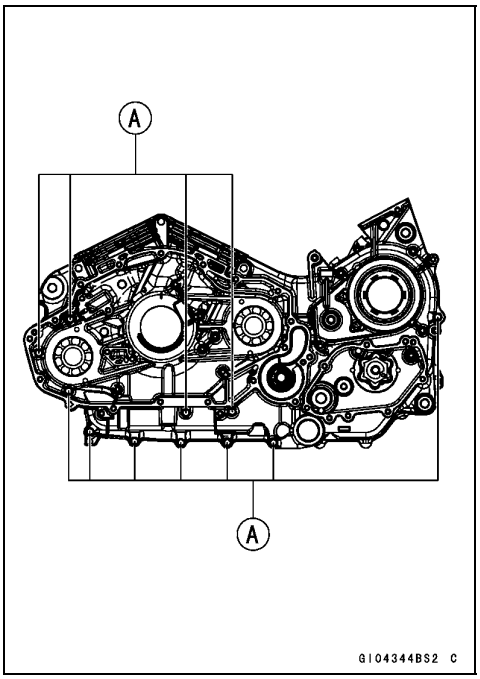

● Remove the right crankcase bolts, following the specified sequence.
○First, loosen the M6 bolts (9) [A].
○Next, loosen the M10 bolts (3) [B].

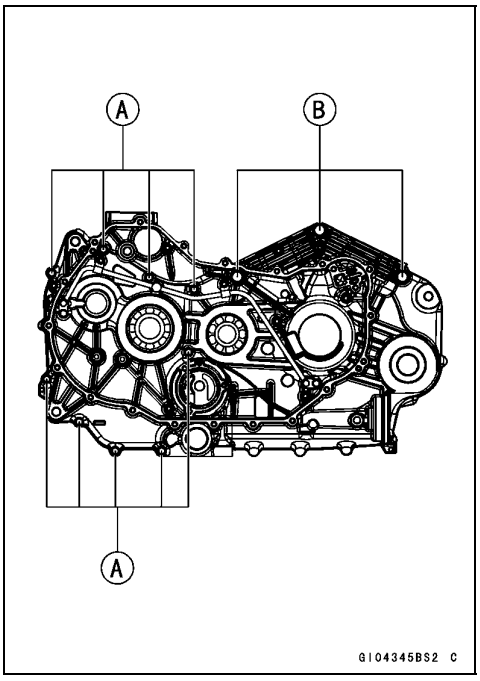

● Put the engine so that the right crankcase half [A] faces upside.

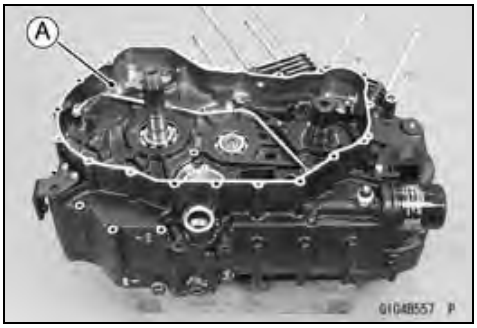

Downloaded from www.vulcanriders-sweden.org

Crankcase

● Using the pry points, split the crankcase halves.
Pry Point (Front) [A]
Pry Points (Rear) [B]
★If the crankcase does not split easily, tap the crankcase mating surface lightly with a plastic mallet.
○Take care not to damage the crankcase.
● Lift up the right crankcase half.

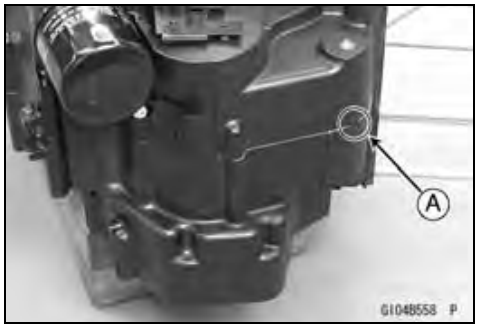

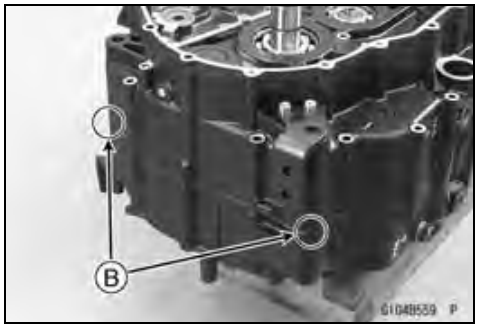

Crankcase Assembly

CAUTION

The left and right crankcase halves are machined at the factory in the assembled state, so the crankcase halves must be replaced as a set.

● Refer to the Bearing and Oil Seal Installation for the bearing, outer race and oil seal installation procedures.
● With a high-flash point solvent, clean off the mating surfaces of the crankcase halves and wipe dry.

⚠ WARNING

Clean the crankcase in a well-ventilated area, and take care that there is no spark or flame anywhere near the working area. Because of the danger of highly flammable liquids, do not use gasoline or low -flash point solvent.

● Using compressed air, blow out the oil passages in the crankcase halves.

★If the piston oil jet [A] was removed, install it as follows.
○Replace the O-ring [B] with a new one.

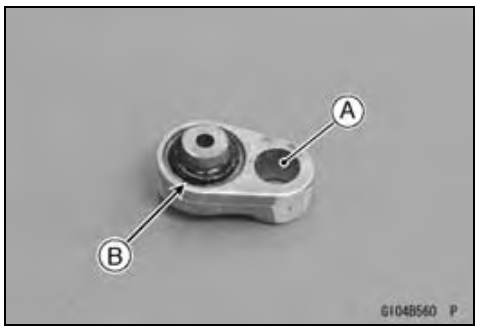

Downloaded from www.vulcanriders-sweden.org

Crankcase

○Insert the piston oil jet [A] into the hole on the crankcase [B] as shown in the figure.
○Apply a non-permanent locking agent to the threads of the piston oil jet bolt [C], and tighten it.

Torque - Piston Oil Jet Bolt : 6.9 N·m (0.70 kgf·m, 61 in·lb)

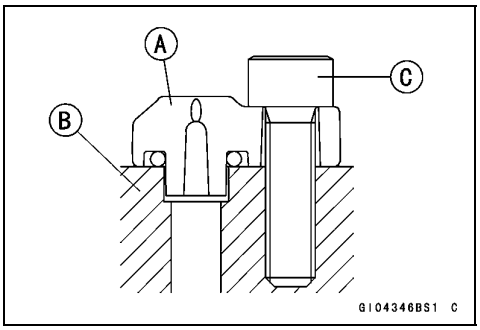

● Install the following parts on the left crankcase half.
Crankshaft [A] (see Crankshaft Installation)
Front Balancer Shaft [B] (see Balancer Shaft Installation)
Rear Balancer Shaft [C] (see Balancer Shaft Installation)
Transmission Shafts [D] (see Transmission Shaft and Shift Fork Installation)
Shift Forks [E] and Shift Rods (see Transmission Shaft and Shift Fork Installation)
Shift Drum [F] (see Shift Drum Installation)
Dowel Pins [G]
New O-ring [H]

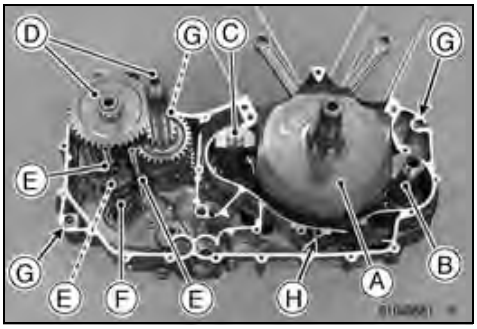

● Install the following parts on the right crankcase half.
Inside Oil Pipe [A] (see Oil Pipe Installation in the Engine Lubrication System chapter)
Oil Pressure Relief Valve [B] (see Oil Pressure Relief Valve Installation in the Engine Lubrication System chapter)

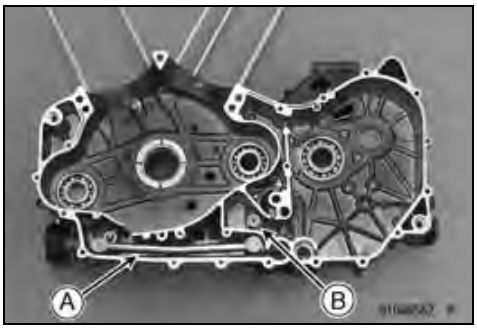

Downloaded from www.vulcanriders-sweden.org

Crankcase

● Apply liquid gasket [A] to the mating surface of the lower crankcase half.

Sealant - Kawasaki Bond (Liquid Gasket - Black): 92104 -1064

NOTE

○*Especially, apply a sealant so that it shall be filled up on the grooves [B].*

CAUTION
Do not apply liquid gasket around the oil passage hole [C]. This may block the oil passage.

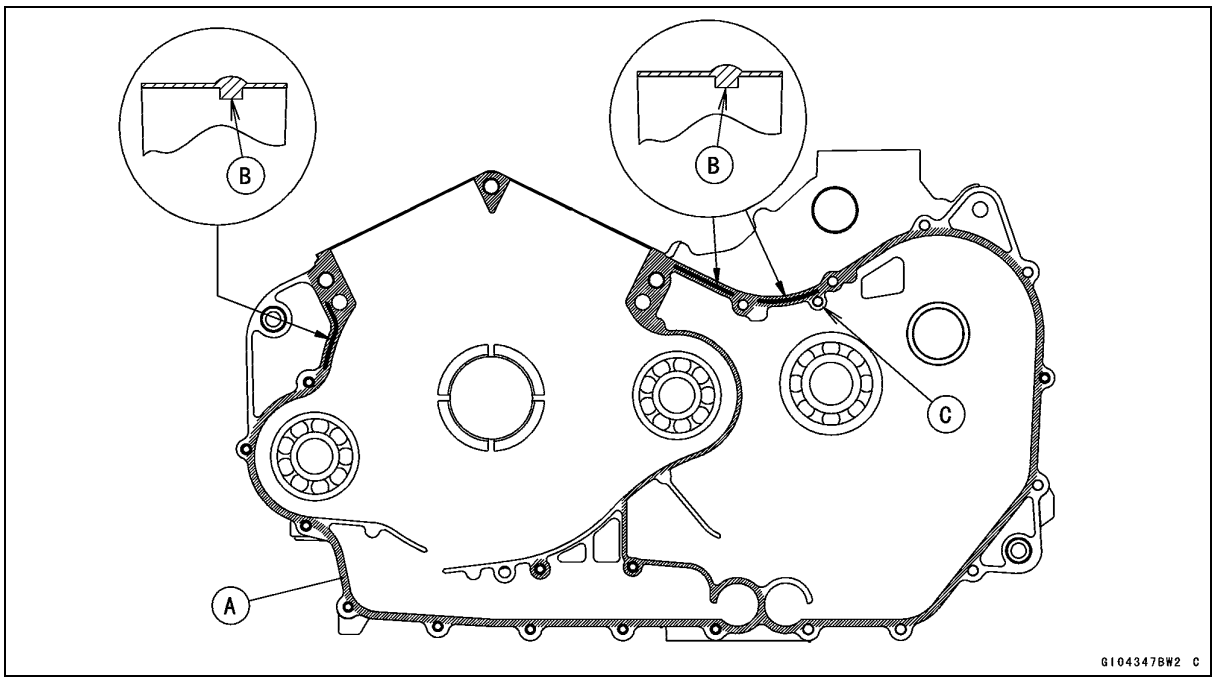

● Fit the right crankcase half to the left crankcase half.

NOTE

○*Make the application finish within 20 minutes when the liquid gasket to the mating surface of the crankcase half is applied.*

○*Moreover fit the case and tighten the bolts just after application of the liquid gasket.*

Downloaded from www.vulcanriders-sweden.org

Crankcase

NOTE

○*Be sure to tighten the right crankcase bolts first.*

● Tighten the right crankcase bolts using the following steps.

○First, tighten the M10 bolts (3) [A].

Torque - Crankcase Bolts (M10) : 39 N·m (4.0 kgf·m, 29 ft·lb)

○Next, tighten the M6 bolts (9) [B].

Torque - Crankcase Bolts (M6) : 12 N·m (1.2 kgf·m, 106 in·lb)

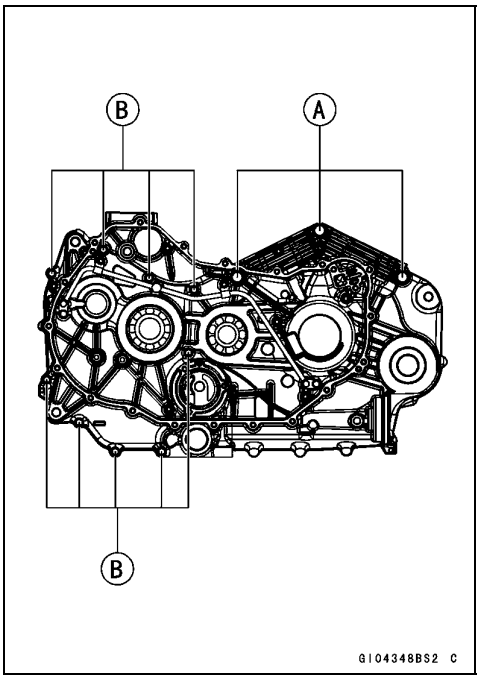

● Tighten the left crankcase bolts (11) [A].

Torque - Crankcase Bolts (M6) : 12 N·m (1.2 kgf·m, 106 in·lb)

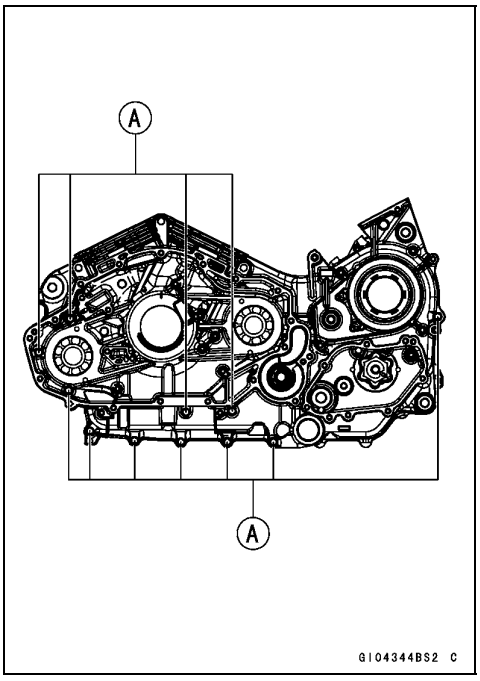

● After tightening all crankcase bolts, check the following items.

○Wipe up the liquid gasket that seeps out around the crankcase mating surface.

○Crankshaft, transmission shafts and balancer shafts turn freely.

○While spinning the output shaft, gears shift smoothly from the 1st to 6th gear, and 6th to 1st.

○When the output shaft stays still, the gear can not be shifted to 2nd gear or other higher gear positions.

Downloaded from www.vulcanriders-sweden.org

Crankcase

- Apply grease to the new O-ring [A] and install it on the output shaft as shown in the figure.
- Apply grease to oil seal lip.
- Install the collar [B] so that the stepped side [C] faces inward.
- Install the removed parts (see appropriate chapters).

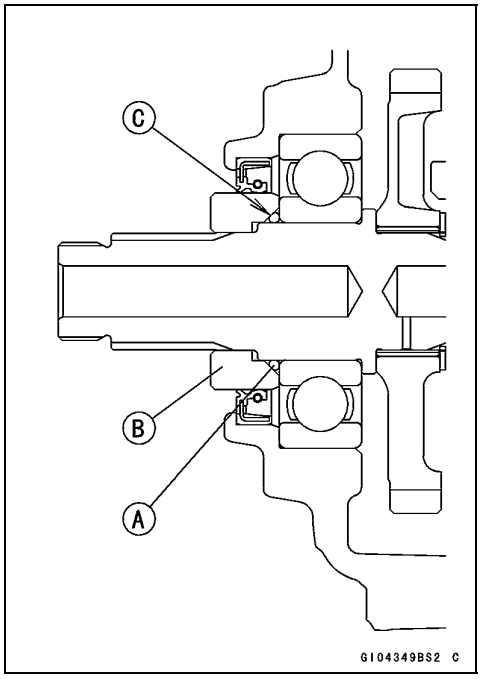

Downloaded from www.vulcanriders-sweden.org

Crankshaft and Connecting Rods

Crankshaft Removal

- Split the crankcase (see Crankcase Splitting).
- Turn the balancer shafts [A] to clear the balancers [B] from the crankshaft web [C].
- Remove the crankshaft.

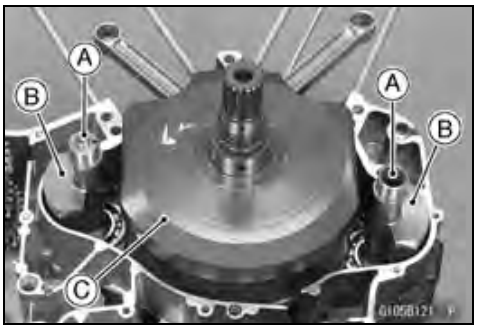

Crankshaft Installation

- Apply molybdenum disulfide oil solution onto the crankshaft main journal [A] on both sides.
- Install the crankshaft so that the plug side [B] faces left crankcase half.

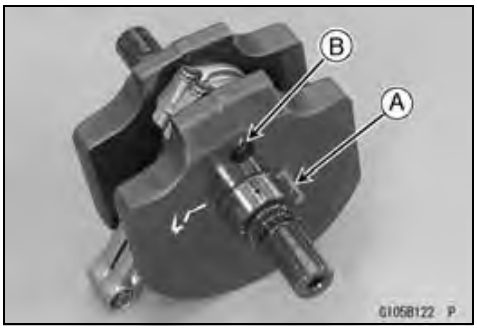

- Set the left connecting rod [A] into the rear cylinder opening [B], and right connecting rod [C] into the front cylinder opening [D].

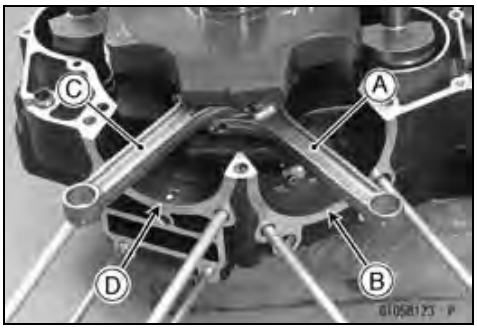

Connecting Rod Removal

- Remove the crankshaft (see Crankshaft Removal).
- Remove the connecting rod big end bolts [A] and take off the connecting rod and big end cap [B].

NOTE

○*Mark and record the locations of the connecting rods and their big end caps so that they can be reassembled in their original positions.*

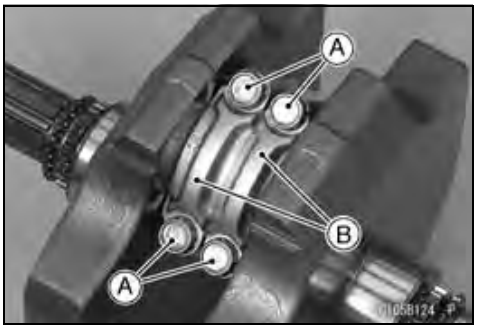

Downloaded from www.vulcanriders-sweden.org

Crankshaft and Connecting Rods

Connecting Rod Installation

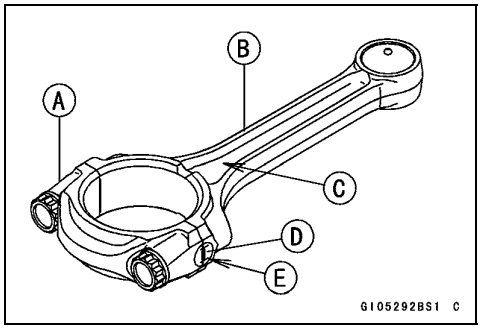

CAUTION

To minimize vibration, the connecting rods should have the same weight mark.

Big End Cap [A]
Connecting Rod [B]
"OUT" Mark [C]
Weight Mark, Alphabet [D]
Diameter Mark [E]: "O" or no mark

CAUTION

If the connecting rods, big end bearing inserts, or crankshaft are replaced with new ones, select the bearing insert and check clearance with a plastigage (press gauge) before assembling engine to be sure the correct bearing inserts are installed.

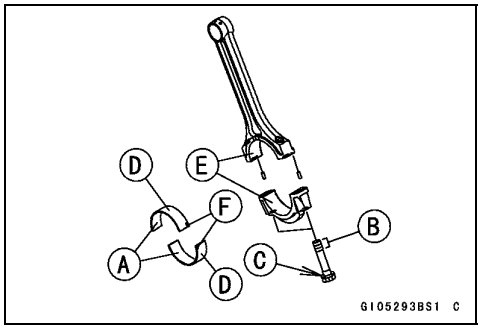

- Apply molybdenum disulfide oil solution to the inner surface of upper and lower bearing inserts [A].
- Apply a small amount of molybdenum disulfide oil solution to the threads [B] and seating surface [C] of the connecting rod big end bolts.

★If bearing inserts are replaced, install them as follows.
○Remove debris and clean the surface of inserts.
○Do not apply molybdenum disulfide oil solution to the outside [D] of the inserts or the inside [E] of the connecting rod and big end cap.

CAUTION

Wrong application of oil and grease could cause bearing damage.

○Install the inserts so that their nails [F] are on the same side and fit into the recess of the connecting rod and big end cap.

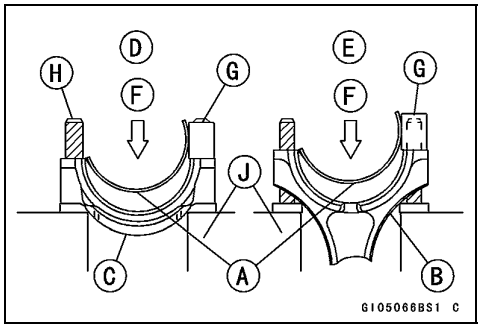

○When installing the inserts [A], be careful not to damage the insert surface with the edge of the connecting rod [B] or the big end cap [C]. One way to install inserts is as follows.
Installation [D] to Big End Cap
Installation [E] to Connecting Rod
Push [F]
Spare Dowel Pin [G]
Connecting Rod Big End Bolts [H]
Suitable Block [J]

Downloaded from www.vulcanriders-sweden.org

Crankshaft and Connecting Rods

● Be sure the dowel pins [A] on the big end cap [B] are in position.

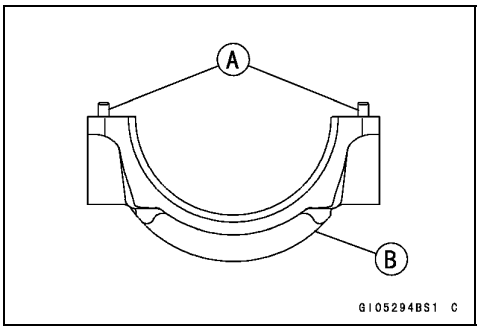

● Install each connecting rod on its original position as follows.

○Left connecting rod [A] is for the rear cylinder and right connecting rod [B] is for the front cylinder.
Engine Left Side [C]
Engine Right Side [D]

○Install the connecting rods so that their “OUT” marks [E] face outward.

○Install the big end cap on the connecting rod, aligning the diameter mark.

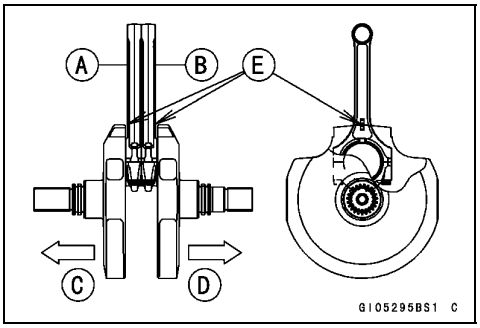

● Tighten:

Torque - Connecting Rod Big End Bolts : 60 N·m (6.1 kgf·m, 44 ft·lb)

Crankshaft/Connecting Rod Cleaning

● After removing the connecting rods from the crankshaft, clean them with a high-flash point solvent.

● Blow the crankshaft oil passages with compressed air to remove any foreign particles or residue that may have accumulated in the passages.

Connecting Rod Bend

● Remove the connecting rod big end bearing inserts, and reinstall the connecting rod big end cap.

● Select an arbor [A] of the same diameter as the connecting rod big end, and insert the arbor through the connecting rod big end.

● Select an arbor of the same diameter as the piston pin and at least 100 mm (3.94 in.) long, and insert the arbor [B] through the connecting rod small end.

● On a surface plate, set the big-end arbor on V block [C].

● With the connecting rod held vertically, use a height gauge to measure the difference in the height of the arbor above the surface plate over a 100 mm (3.94 in.) length to determine the amount of connecting rod bend.

★If connecting rod bend exceeds the service limit, the connecting rod must be replaced.

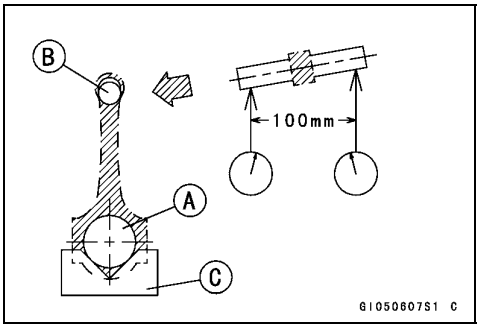

Connecting Rod Bend
Service Limit: TIR 0.2/100 mm (0.008/3.94 in.)

Downloaded from www.vulcanriders-sweden.org

Crankshaft and Connecting Rods

Connecting Rod Twist

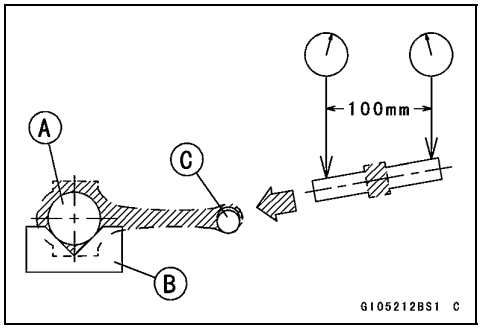

- With the big-end arbor [A] still on V block [B], hold the connecting rod horizontally and measure the amount that the arbor [C] varies from being parallel with the surface plate over a 100 mm (3.94 in.) length of the arbor to determine the amount of connecting rod twist.

★If connecting rod twist exceeds the service limit, the connecting rod must be replaced.

Connecting Rod Twist
Service Limit: TIR 0.2/100 mm (0.008/3.94 in.)

Connecting Rod Big End Side Clearance

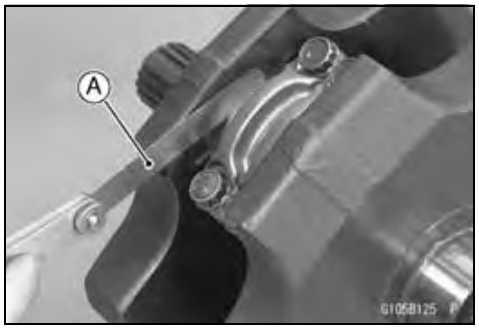

- Measure connecting rod big end side clearance.

○Insert a thickness gauge [A] between the big end and either crankshaft web to determine clearance.

Connecting Rod Big End Side Clearance
Standard: 0.08 ~ 0.30 mm (0.003 ~ 0.012 in.)
Service Limit: 0.5 mm (0.02 in.)

★If the clearance exceeds the service limit, replace the connecting rod with new one and then check clearance again. If clearance is too large after connecting rod replacement, the crankshaft also must be replaced.

Connecting Rod Big End Bearing Insert/Crankpin Wear

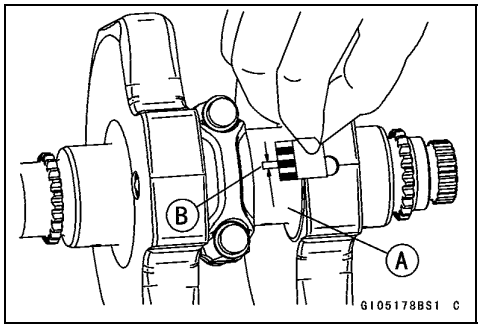

- Remove the connecting rod (see Connecting Rod Removal).
- Cut strips of plastigage to crankpin width. Place a strip on the crankpin parallel to the crankshaft installed in the correct position.
- Tighten the connecting rod big end bolts to the specified torque (see Connecting Rod Installation).

NOTE

○*Do not move the connecting rod and crankshaft during clearance measurement.*

- Remove the connecting rod again, measure each clearance between the bearing insert and crankpin [A] using plastigage (press gauge) [B].

Connecting Rod Big End Bearing Insert/Crankpin Clearance
Standard: 0.026 ~ 0.056 mm (0.0010 ~ 0.0022 in.)
Service Limit: 0.09 mm (0.035 in.)

Downloaded from www.vulcanriders-sweden.org

Crankshaft and Connecting Rods

★If clearance is within the standard, no bearing replacement is required.
★If clearance is between 0.057 mm (0.0022 in.) and the service limit (0.09 mm, 0.035 in.), replace the bearing inserts [A] with inserts painted blue [B]. Check insert/crankpin clearance with the plastigage. The clearance may exceed the standard slightly, but it must not be less than the minimum in order to avoid bearing seizure.
★If the clearance exceeds the service limit, measure the diameter of the crankpin.

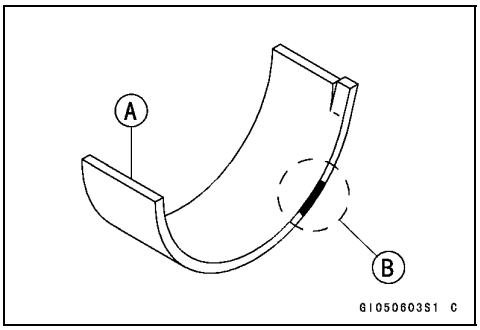

Crankpin Diameter
Standard: 51.981 ~ 52.000 mm (2.0465 ~ 2.0472 in.)
Service Limit: 51.97 mm (2.0461 in.)

★If any crankpin has worn past the service limit, replace the crankshaft with a new one.
★If the measured crankpin diameter [A] is not less than the service limit, but do not coincide with the original diameter marking on the crankshaft, make new mark on it.

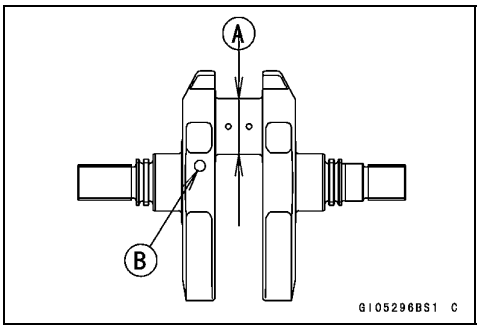

Crankpin Diameter Mark
None 51.981 ~ 51.991 mm (2.0465 ~ 2.0468 in.)
○ 51.992 ~ 52.000 mm (2.0469 ~ 2.0472 in.)

Crankpin Diameter Mark, "○" mark or no mark [B].

● Measure the connecting rod big end inside diameter, and mark each connecting rod big end in accordance with the bore diameter.
● Tighten the connecting rod big end bolts to the specified torque (see Connecting Rod Installation).

NOTE

○*The mark already on the big end should almost coincide with the measurement because of little wear.*

Connecting Rod Big End Inside Diameter Marks
None 55.000 ~ 55.010 mm (2.1654 ~ 2.1657 in.)
○ 55.011 ~ 55.019 mm (2.1658 ~ 2.1661 in.)

Big End Cap [A]
Connecting Rod [B]
Weight Mark, Alphabet [C]
Diameter Mark [D]: "○" or no mark

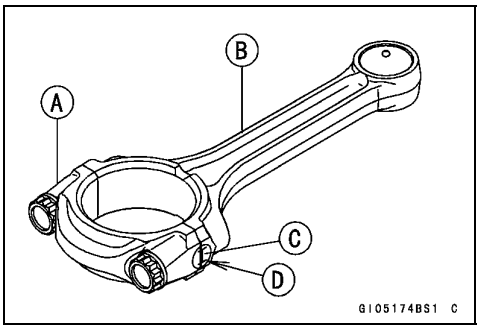

Downloaded from www.vulcanriders-sweden.org

Crankshaft and Connecting Rods

● Select the proper bearing insert [A] in accordance with the combination of the connecting rod and crankshaft coding.
Size Color [B]

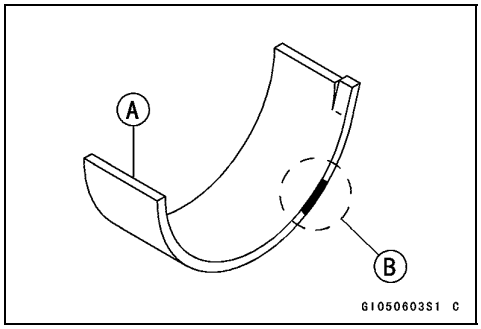

Connecting Rod Big End Bearing Insert Selection

Con-rod Big End Inside Diameter Marking	Crankpin Diameter Marking	Bearing Insert	
		Size Color	Part Number
None	○	Brown	13034-0227
None	None	Black	13034-0226
○	○		
○	None	Blue	13034-0225

● Install the new inserts in the connecting rod and check insert/crankpin clearance with the plastigage.

Crankshaft Side Clearance

● Measure the crankshaft side clearance.
Crankshaft [A]
Crankcase [B]
Clearance [C]

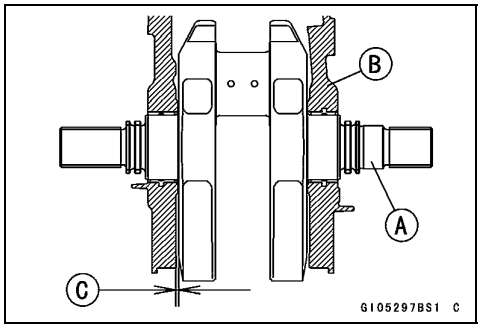

Crankshaft Side Clearance
Standard: 0.05 ~ 0.35 mm (0.002 ~ 0.014 in.)
Service Limit: 0.55 mm (0.022 in.)

★If the clearance exceeds the service limit, measure the crankshaft web length [A] to see whether the crankshaft or the crankcase is faulty.

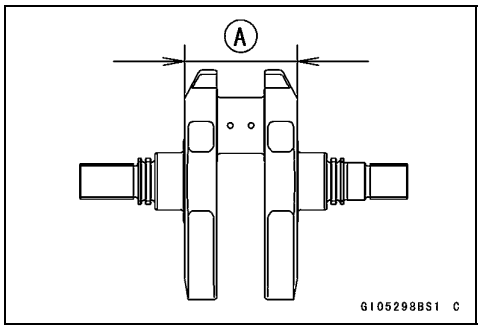

Crankshaft Web Length
Standard: 106.85 ~ 106.95 mm (4.2067 ~ 4.2106 in.)
Service Limit: 106.6 mm (4.197 in.)

★If the length measurement is smaller than the service limit, replace the crankshaft. Otherwise, replace the crankcase halves as a set.

NOTE

○*The left and right crankcase halves are machined at the factory in the assembled state, so they must be replaced as a set.*

Crankshaft Runout

● Measure the crankshaft runout.

★If the measurement exceeds the service limit, replace the crankshaft.

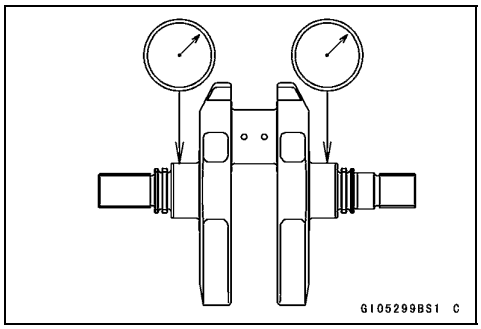

Crankshaft Runout
Standard: TIR 0.02 mm (0.0008 in.) or less
Service Limit: TIR 0.05 mm (0.002 in.)

Downloaded from www.vulcanriders-sweden.org

Crankshaft and Connecting Rods

Crankshaft Main Bearing/Main Journal Wear

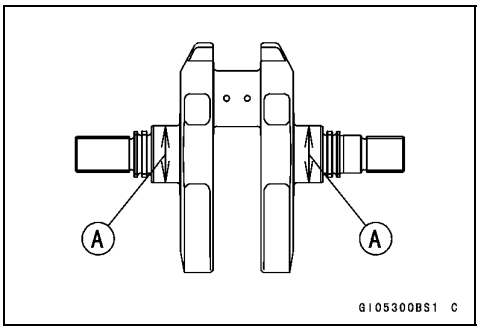

● Measure the diameter [A] of the crankshaft main journal.

★If any journal has worn past the service limit, replace the crankshaft with a new one.

Crankshaft Main Journal Diameter

Standard: 52.986 ~ 53.000 mm (2.0861 ~ 2.0866 in.)

Service Limit: 52.96 mm (2.085 in.)



● Measure the main bearing inside diameter [A] in the crankcase halves.

Crankcase Main Bearing Inside Diameter

Standard: 53.030 ~ 53.049 mm (2.0878 ~ 2.0885 in.)

Service Limit: 53.08 mm (2.090 in.)

★If the diameter exceeds the service limit, replace the crankcase halves as a set.

NOTE

○*The left and right crankcase halves are machined at the factory in the assembled state, so they must be replaced as a set.*

Downloaded from www.vulcanriders-sweden.org

Balancer

Balancer Mechanism Removal



- Remove the alternator cover (see Alternator Cover Removal in the Electrical System chapter).
- Loosen the front balancer sprocket bolt [A] and rear balancer sprocket bolt [B] while holding the alternator rotor [C] steady with the rotor holder [D].

Special Tools - Grip [E] : 57001-1591
Rotor Holder : 57001-1726

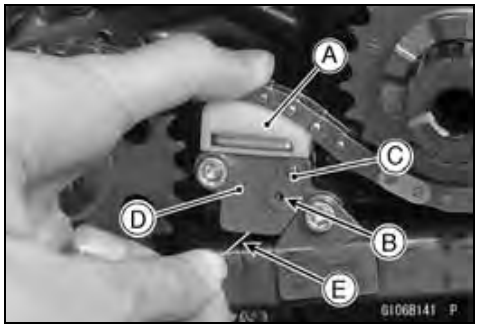

- Remove the alternator rotor (see Alternator Rotor Removal in the Electrical System chapter).
- Push down the balancer chain tensioner shoe [A] to align the hole [B] of the link plate [C] and tensioner body [D].
- Insert the suitable pin [E] into the hole to hold the tensioner in place.

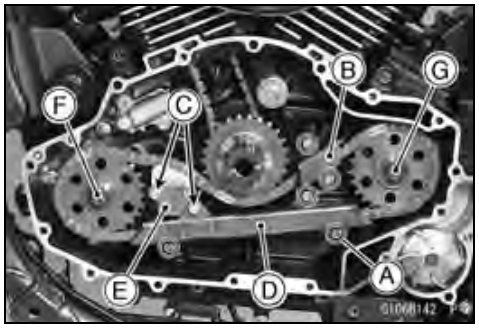

- Remove:
  Balancer Chain Guide Bolts [A]
  Upper Balancer Chain Guide [B]
  Balancer Chain Tensioner Bolts [C]
  Lower Balancer Chain Guide [D]
  Balancer Chain Tensioner [E]
  Front Balancer Sprocket Bolt [F] with Washer
  Rear Balancer Sprocket Bolt [G] with Washer



- Remove the following parts as a set.
  Balancer Chain Sprocket [A]
  Front Balancer Sprocket [B]
  Rear Balancer Sprocket [C]
  Balancer Chain [D]

Downloaded from www.vulcanriders-sweden.org

Balancer

Balancer Mechanism Installation

- Align the line [A] on the following parts with the colored chain links [B] as shown in the figure.
  Balancer Chain Sprocket [C]
  Front Balancer Sprocket [D]
  Rear Balancer Sprocket [E]

○The front and rear balancer sprockets are identical.

- Install the balancer chain sprocket and balancer sprockets by aligning [F] the alignment notch with the alignment teeth on the following parts.
  Crankshaft [G]
  Front Balancer Shaft [H]
  Rear Balancer Shaft [I]
- Install the balancer sprocket bolts together with the washers, and tighten them temporarily.

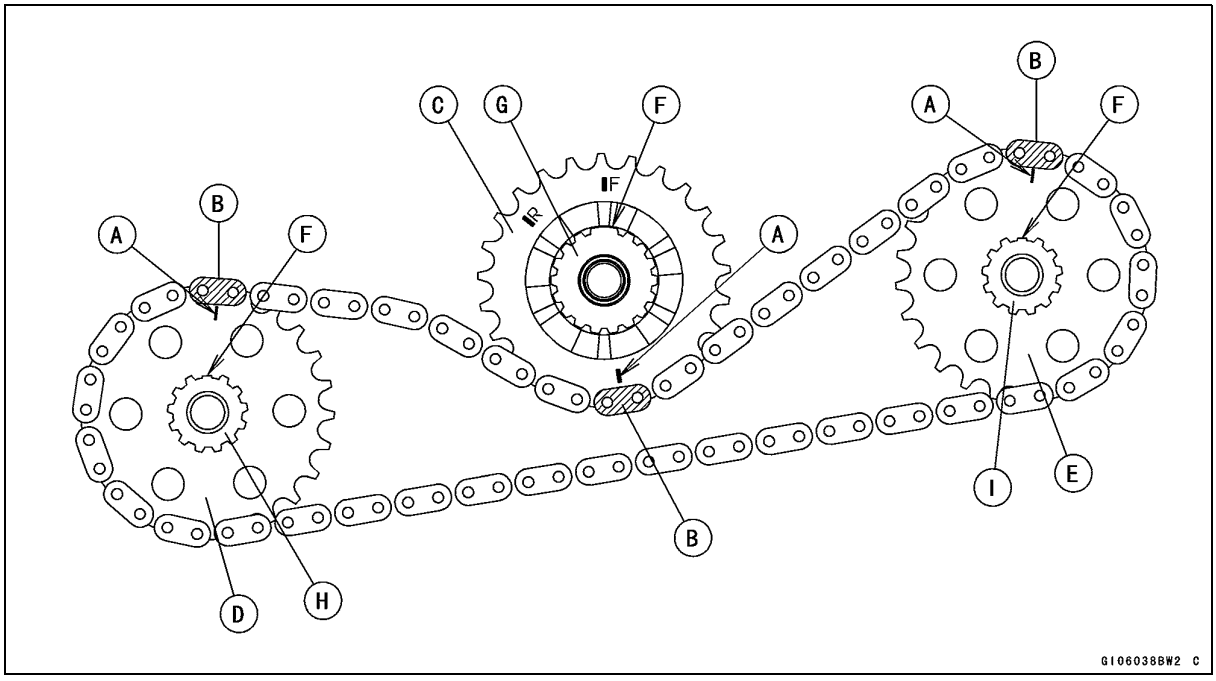

- Push down the balancer chain tensioer shoe [A] while pushing the ratchet [B].

CAUTION

Be careful the oil remaining in the tensioner body dashes out.

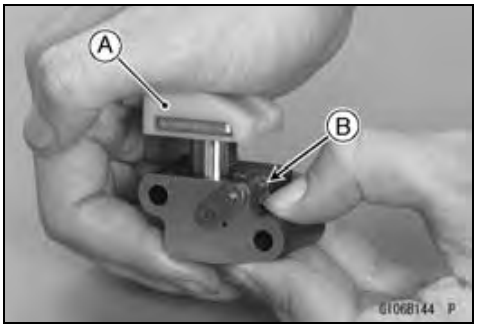

Downloaded from www.vulcanriders-sweden.org

Balancer

- Engage the first teeth [A] of the ratchet [B] with second groove [C] of the plunger [D].

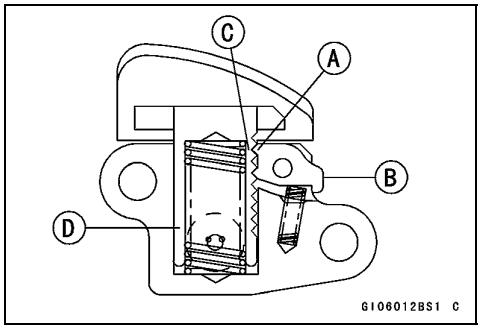

- Insert the suitable pin [A] into the hole of the tensioner body [B] through the hole of the link plate [C].

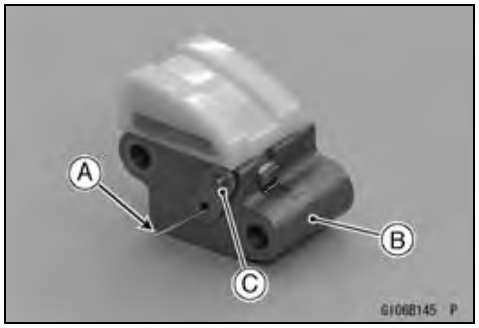

Downloaded from www.vulcanriders-sweden.org

Balancer

- Install the upper balancer chain guide [A].

Torque - Upper Balancer Chain Guide Bolts [B] : 12 N·m (1.2 kgf·m, 106 in·lb)

- Install the balancer chain tensioner [C] and lower balancer chain guide [D].

Torque - Balancer Chain Tensioner Bolts [E] : 12 N·m (1.2 kgf·m, 106 in·lb)
Lower Balancer Chain Guide Bolts [F] : 12 N·m (1.2 kgf·m, 106 in·lb)

- Pull out the suitable pin [G] from the balancer chain tensioner.
- Install the alternator rotor (see Alternator Rotor Installation in the Electrical System chapter).
- Tighten the front balancer sprocket bolt [H] and rear balancer sprocket bolt [I] while holding the alternator rotor steady with the rotor holder.

Special Tools - Grip : 57001-1591
Rotor Holder : 57001-1726

Torque - Balancer Sprocket Bolts : 83 N·m (7.0 kgf·m, 51 ft·lb)

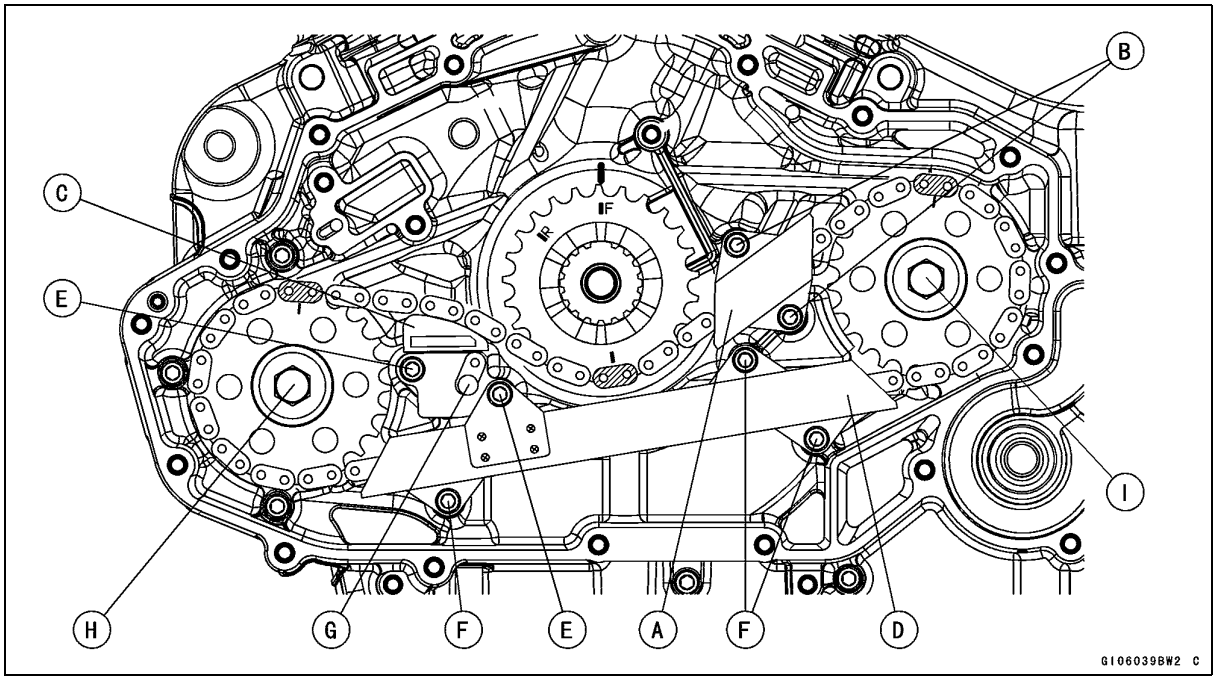

Downloaded from www.vulcanriders-sweden.org

Balancer

Balancer Shaft Removal

NOTE

○*The front and rear balancer shafts are same procedures.*

- Split the crankcase (see Crankcase Splitting).
- Turn the balancer shaft [A] to clear the balancer [B] from the crankshaft web [C].
  Front Balancer Shaft [D]
  Rear Balancer Shaft [E]
- Remove the balancer shaft.

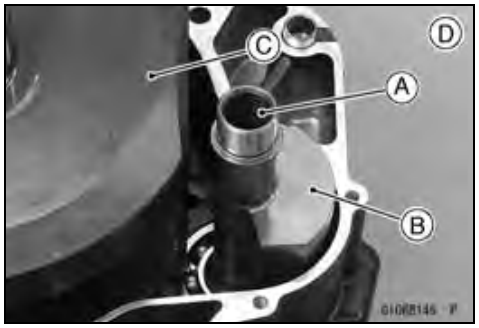

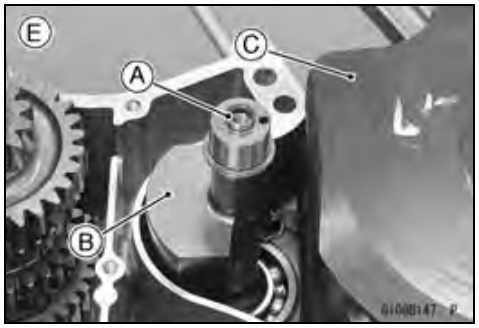

Balancer Shaft Installation

- Install the balancer shaft [A] so that the flanged side [B] faces left crankcase.
  Front Balancer Shaft [C]
  Rear Balancer Shaft [D]

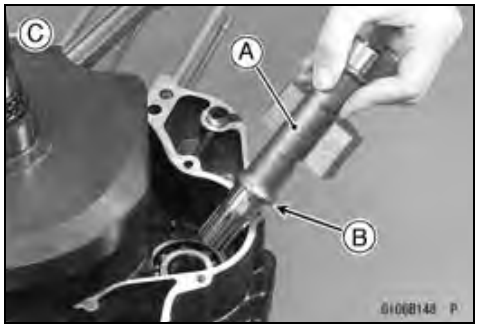

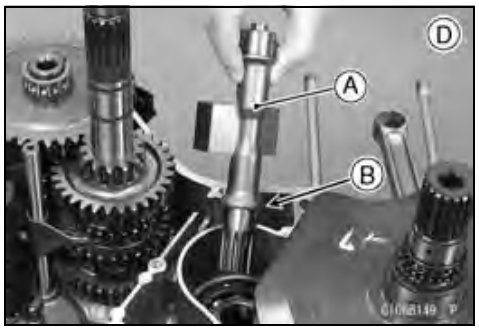

Downloaded from www.vulcanriders-sweden.org

Starter Clutch

Starter Clutch Removal

● Refer to the Clutch Removal in the Clutch chapter.

Starter Clutch Installation

● Refer to the Clutch Installation in the Clutch chapter.

Starter Clutch Disassembly

● Remove the clutch housing (see Clutch Removal in the Clutch chapter).
● Pry the hook portions [A] and remove the plate [B].
● Pull the one-way clutch [C] out of the clutch housing.
● Remove the washer [D].

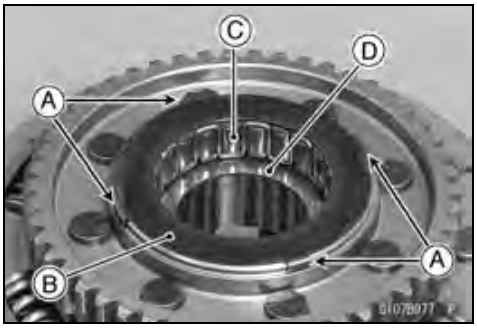

Starter Clutch Assembly

● Install the washer [A] on the clutch housing.
● Install the one-way clutch [B] so that the circlip side [C] faces inside.
● Fit the hook portions of the plate into the groove [D] of the clutch housing securely.

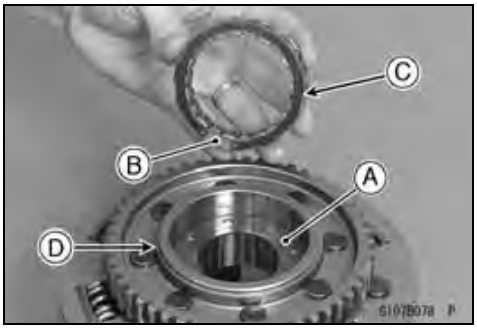

Starter Clutch Inspection

● Remove the starter motor (see Starter Motor Removal in the Electrical System chapter).
● Turn the torque limiter [A] by hand.
○The torque limiter should turn clockwise freely [B], but should not turn counterclockwise.
Left Side View [C]
★If the torque limiter does not operate as it should or if it makes noise, go to the next step.

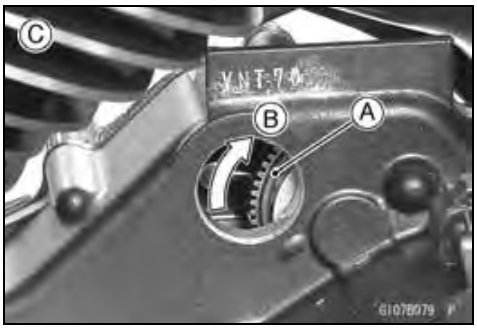

● Disassemble the starter clutch (see Starter Clutch Disassembly), and visually inspect the clutch parts.
One-way Clutch [A]
Housing Part [B] of Clutch Housing
★If there is any worm or damaged part, replace it.

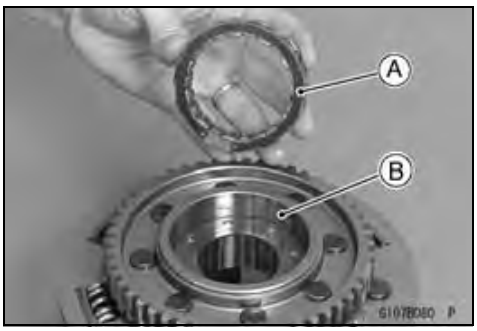

Downloaded from www.vulcanriders-sweden.org

Starter Clutch

○Examine the starter clutch gear [A] as well. Replace the clutch gear if it is worn or damaged.



Downloaded from www.vulcanriders-sweden.org

Torque Limiter

Torque Limiter Removal

● Refer to the Clutch Removal in the Clutch chapter.

CAUTION
Do not disassemble the torque limiter [A]. The torque limiter will not function if this is done.

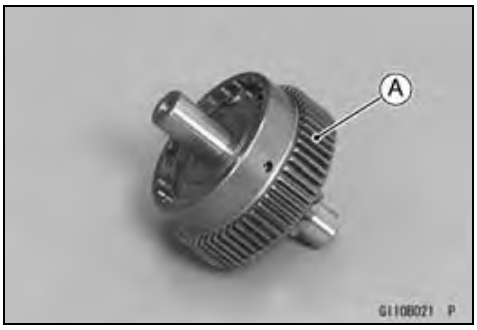

Torque Limiter Installation

● Refer to the Clutch Installation in the Clutch chapter.

Torque Limiter Inspection

● Remove the torque limiter and visually inspect it.

★If the limiter has wear, discoloration, or other damage, replace it as a set.

Gear [A]
Clutch Plates (4) [B]
Friction Plates (5) [C]
Springs (2) [D]
Pinion [E]
Shim [F]

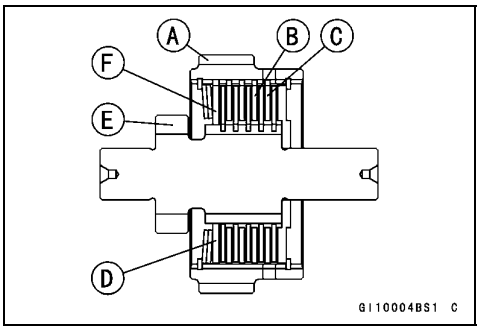

Downloaded from www.vulcanriders-sweden.org

Transmission

Transmission Shaft and Shift Fork Removal

- Split the crankcase (see Crankcase Splitting).
- Remove:
  Speed Sensor (see Speed Sensor Removal in the Electrical System chapter)
  Shift Rods [A]
  Shift Forks [B]

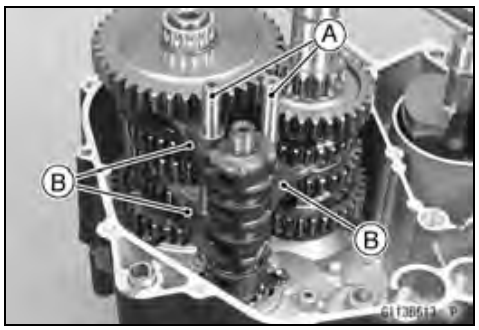

- Take out the drive shaft [A] and output shaft [B] as a set.

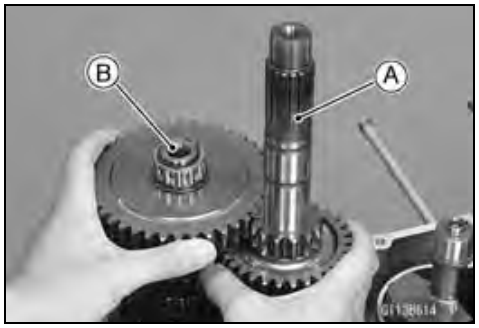

Transmission Shaft and Shift Fork Removal

- Apply engine oil to the gear, and install the drive shaft and output shaft as a set.
- Apply engine oil to the shift forks and rods.
- Install the fork [A] of the shortest ears on the drive shaft so that the one digit (1 ~ 8) mark side [B] faces upward.
- Place the pin [C] in the center groove in the shift drum.
- Install the two forks [D] of the shortest ears on the output shaft so that the one digit (1 ~ 8) mark side [E] faces upward.

○The two forks on the output shaft are identical.

- Place the pins [F] in the grooves on both sides in the shift drum.
- Install the shift rods [G].

○The shift rods are identical.

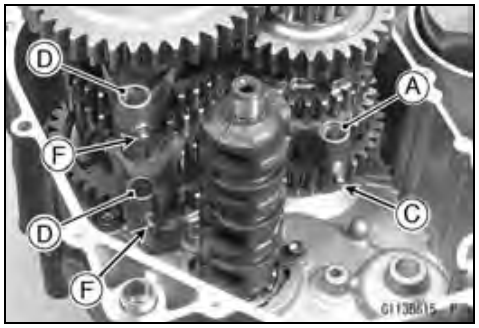

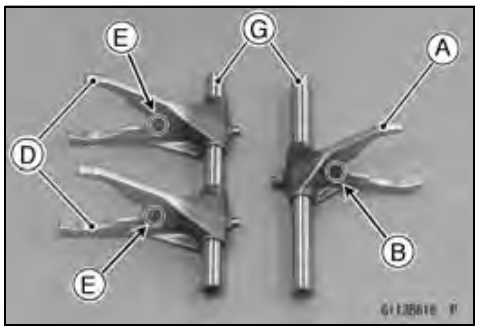

Transmission Shaft Disassembly

- Remove the transmission shafts (see Transmission Shaft and Shift Fork Removal).
- Remove the circlips, and then disassemble the transmission shafts.

Special Tool - Outside Circlip Pliers: 57001-144

- The 5th gear [A] on the output shaft has three steel balls for the positive neutral finder mechanism.
- Remove the 5th gear as follows.

○Set the output shaft in a vertical position holding the 3rd gear [B].

○Spin the 5th gear quickly [C] and pull it off upward.

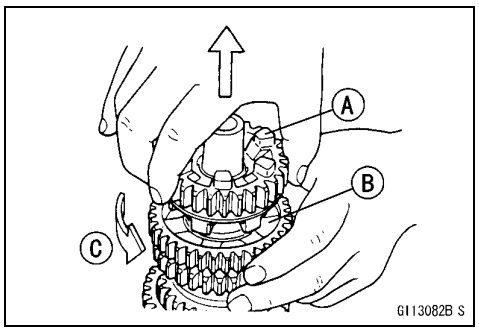

Downloaded from www.vulcanriders-sweden.org

Transmission

Transmission Shaft Assembly

- When assembling the transmission shafts, refer to the transmission assembly illustration on ahead too.
- Apply engine oil to the bushings and shafts.

- Replace any circlips removed with new ones.
- Install the circlips [A] so that opening [B] of it is aligned with a spline groove [C].

Special Tool - Outside Circlip Pliers : 57001-144

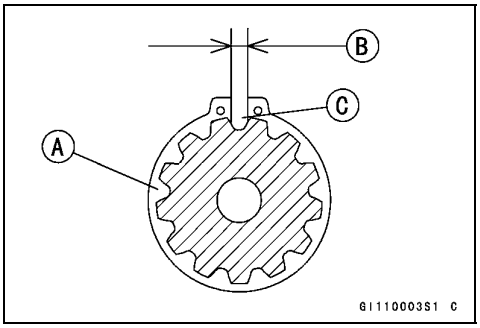

- The drive shaft gears can be recognized by size: the gear with the smallest diameter is 1st gear, and the largest one is 6th gear. Be sure that all parts are put back in the correct sequence and all circlips and washers are properly in place.
- Install the 3rd/4th gear onto the drive shaft with their oil holes aligned.
- Install the 6th gear bushing onto the drive shaft with their oil holes aligned.

- The output shaft gears can be recognized by size: the gear with the largest diameter is 1st gear, and the smallest one is 6th gear. Be sure that all parts are put back in the correct sequence and all circlips and washers are properly in place.
- Install the 6th gear onto the output shaft with their oil holes aligned.
- Install the 3rd/4th gear bushing onto the output shaft with their oil holes aligned.

- Fit the steel balls into the 5th gear holes in the output shaft, aligning three oil holes.
  5th Gear [A]
  Output Shaft [B]
  Steel Balls [C]
  Oil Holes [D]

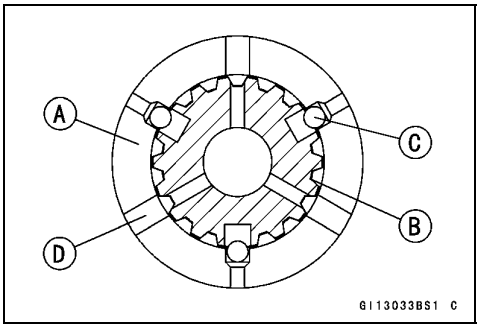

CAUTION

Do not apply grease to the steel balls to hold them in place. This will cause the positive neutral finder mechanism to malfunction.

○After assembling the 5th gear with steel balls in place on the output shaft, check the ball-locking effect that the 5th gear does not come out of the output shaft when moving it up and down by hand.

- Check that each gear spins or slides freely on the transmission shafts without binding after assembly.

Downloaded from www.vulcanriders-sweden.org

Transmission

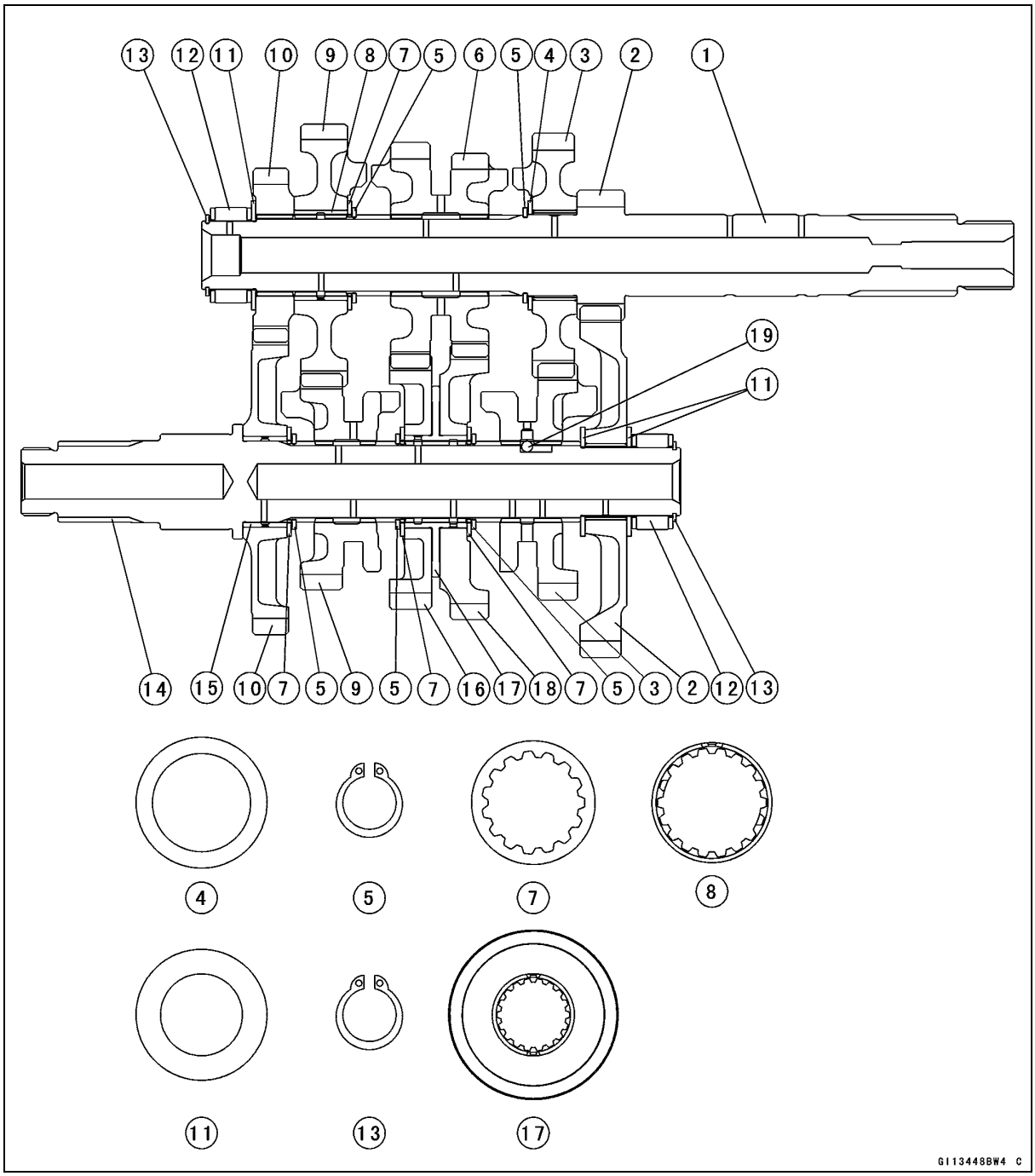

1. Drive Shaft
2. 1st Gear
3. 5th gear
4. Thrust Washer, Inside Diameter 30.3 mm (1.19 in.)
5. Circlip, Outside Diameter 32.2 mm (1.27 in.)
6. 3rd/4th Gear
7. Toothed Washer, Outside Diameter 40 mm (1.57 in.)
8. Bushing
9. 6th (Top) Gear
10. 2nd Gear
11. Thrust Washers, Inside Diameter 25.3 mm (1.00 in.)
12. Needle Bearing
13. Circlip, Outside Diameter 27.9 mm (1.10 in.)
14. Output Shaft
15. Busing
16. 4th Gear
17. Bushing
18. 3rd Gear
19. Steel Ball

Downloaded from www.vulcanriders-sweden.org

Transmission

Shift Drum Removal

- Split the crankcase (see Crankcase Splitting).
- Remove:
  Shift Forks (see Transmission Shaft and Shift Fork Removal)
  Pin [A] and Spring [B]
  Shift Drum Bearing Retainer Bolts [C]
- Pull out the shift drum [D] while aligning the shift drum cam with the left crankcase hole.

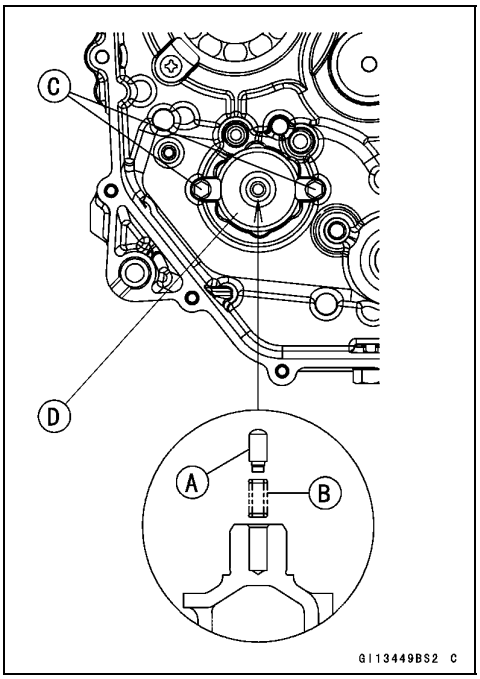

Shift Drum Installation

- Be sure to install the spring and pin to hole of the shift drum.
- Apply a non-permanent locking agent to the threads of the shift drum bearing retainer bolts, and tighten them.

Torque - Shift Drum Bearing Retainer Bolts : 9.8 N·m (1.0 kgf·m, 87 in·lb)

Shift Drum Disassembly

- Remove the shift drum (see Shift Drum Removal).
- Remove the shift drum cam bolt [A] while holding the shift drum with a vise.
- Remove:
  Shift Drum Holder [B]
  Dowel Pin [C]
  Shift Drum Cam [D]

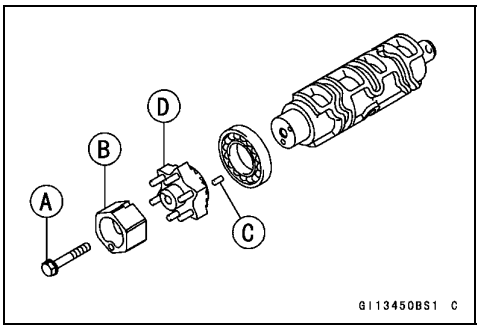

Downloaded from www.vulcanriders-sweden.org

Transmission

Shift Drum Assembly

★If the new pins [A] are installed on the shift drum cam [B], note the following.

○Install the new pins so that the longest pin [C] is positioned as shown in the figure.

Cutout Portion [D] of Shift Drum Cam

● Install the following parts.

Ball Bearing [E]
Dowel Pin [F]
Shift Drum Cam
Shift Drum Holder [G]

● Apply a non-permanent locking agent to the threads of the shift drum cam bolt [H], and tighten it.

Torque - Shift Drum Cam Bolt : 12 N·m (1.2 kgf·m, 106 in·lb)

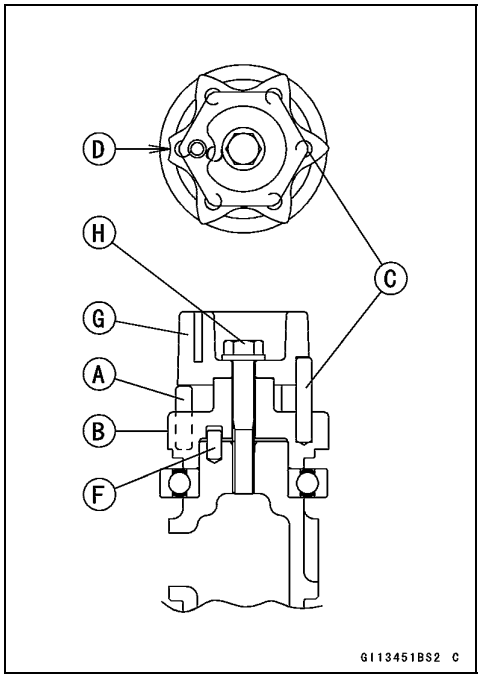

Downloaded from www.vulcanriders-sweden.org

Transmission

Shift Fork Bending

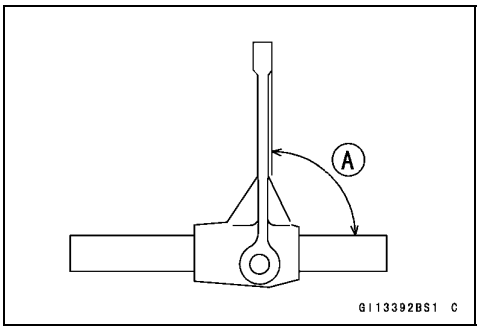

- Visually inspect the shift forks, and replace any fork that is bent. A bent fork could cause difficulty in shifting, or allow the transmission to jump out of gear when under power.
  90° [A]

Shift Fork/Gear Groove Wear

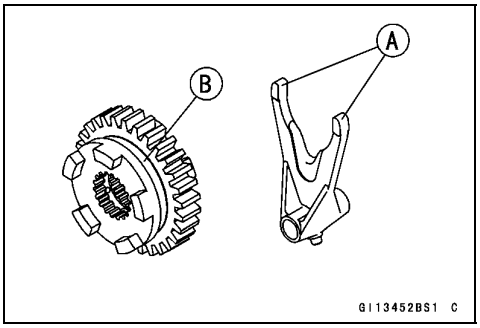

- Measure the thickness of the shift fork ears [A], and measure the width [B] of the gear grooves.

★If the thickness of a shift fork ear is less than the service limit, the shift fork must be replaced.

Shift Fork Ear Thickness

Standard:	**6.9 ~ 7.0 mm (0.272 ~ 0.276 in.)**
Service Limit:	**6.8 mm (0.268 in.)**

★If the gear groove is worn over the service limit, the gear must be replaced.

Gear Groove Width

Standard:	**7.05 ~ 7.15 mm (0.278 ~ 0.281 in.)**
Service Limit:	**7.25 mm (0.285 in.)**

Shift Fork Guide Pin/Drum Groove Wear

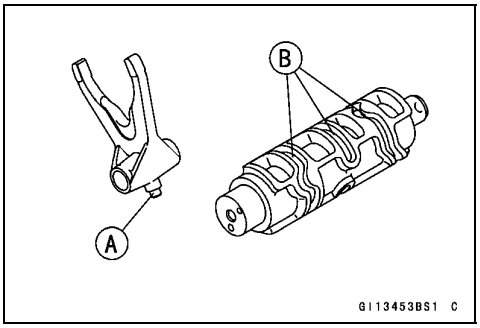

- Measure the diameter of each shift fork guide pin [A], and measure the width [B] of each shift drum groove.

★If the guide pin on any shift fork is less than the service limit, the fork must be replaced.

Shift Fork Guide Pin Diameter

Standard:	**5.9 ~ 6.0 mm (0.232 ~ 0.236 in.)**
Service Limit:	**5.8 mm (0.228 in.)**

★If any shift drum groove is worn over the service limit, the drum must be replaced.

Shift Drum Groove Width

Standard:	**6.05 ~ 6.20 mm (0.238 ~ 0.244 in.)**
Service Limit:	**6.3 mm (0.248 in.)**

Gear Dog and Gear Dog Hole Damage

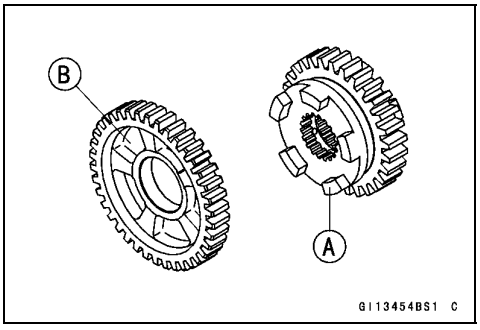

- Visually inspect the gear dogs [A] and gear dog holes [B].

★Replace any damaged gears or gears with excessively worn dogs or dog holes.

Downloaded from www.vulcanriders-sweden.org

External Shift Mechanism

Shift Pedal Removal

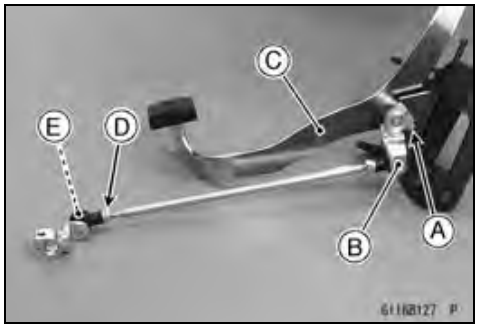

- Remove the front footboard left (Front Footboard Removal/Installation in the Frame chapter).
- Remove:
  Front Shift Lever Bolt [A]
  Front Shift Lever [B]
  Shift Pedal [C]

★If the tie-rod is removed from the front and rear shift levers, note the following.

○The following portions have left-hand threads.
  Rear Shift Lever Side of Tie-Rod
  Locknut [D] of Rear Shift Lever Side (This locknut is thinner than the front one.)
  Ball Joint [E] of Rear Shift Lever

Shift Pedal Installation

- When the new oil seals [A] are installed in the front footboard left bracket housing [B], press and insert the oil seals until oil seal surface [C] is 0.4 ~ 1.0 mm (0.016 in. ~ 0.039 in.) [D] from the housing end [E].

NOTE

○*Install the oil seals so that the oil seal rip faces the housing.*

- Apply grease to the oil seal lips and sliding surface of shift pedal shaft.

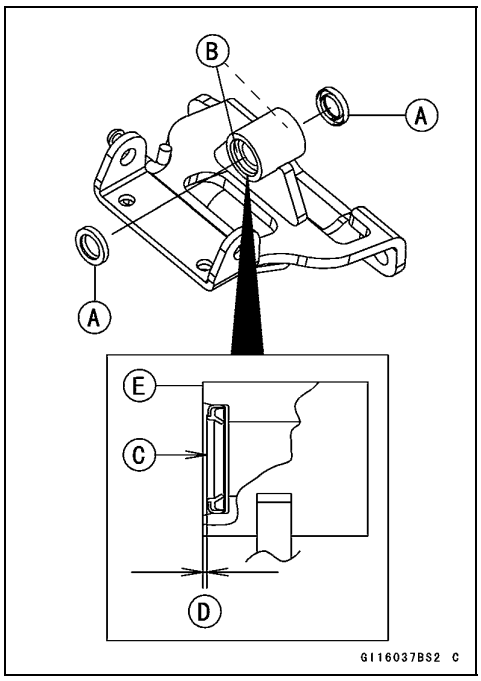

- Align the punch mark [A] on the shift pedal shaft with the punch mark [B] on the front shift lever [C].
- Tighten:

Torque - Shift Lever Bolt : 12 N·m (1.2 kgf·m, 106 in·lb)

- Install the front footboard left (Front Footboard Removal/Installation in the Frame chapter).

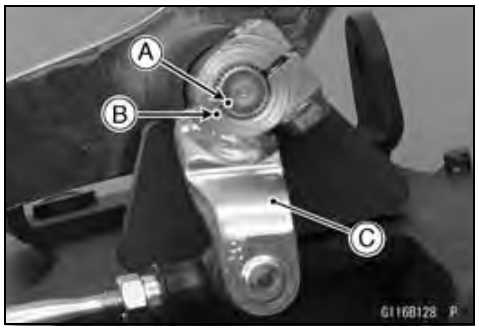

Downloaded from www.vulcanriders-sweden.org

External Shift Mechanism

● After installation, confirm that the shift pedal [A] is positioned as shown in the figure.
  30 ~ 40 mm (1.18 ~ 1.57 in.) [B]
  About 1°[C]
  About 240.0 mm (9.45 in.) [D]
  About 7°[E]

★If the pedal position is different, adjust it as follows.

○To adjust the pedal position, loosen the front locknut [F] and rear locknut (left-hand threads) [G], and then turn the tie-rod [H].

○Tighten:

Torque - Tie-Rod Locknuts : 9.8 N·m (1.0 kgf·m, 87 in·lb)

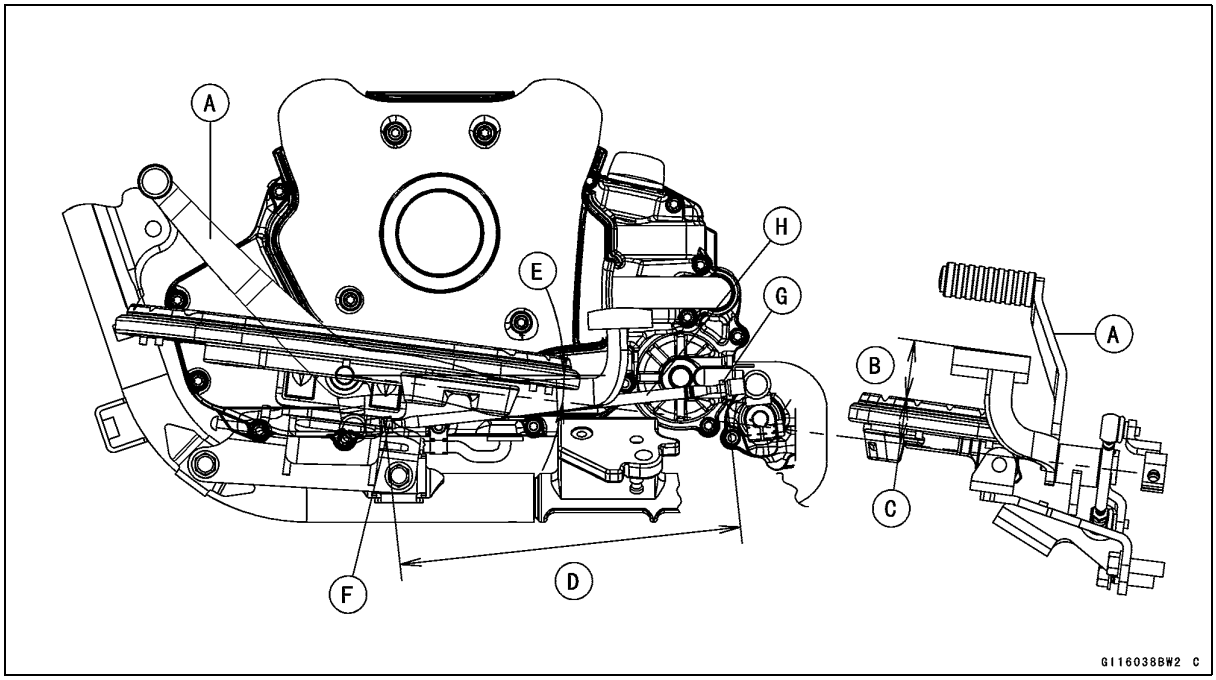

Downloaded from www.vulcanriders-sweden.org

External Shift Mechanism

● Be sure the sealing lip of the rubber boot [A] fits into the groove of the ball joint after installing the shift pedal.
Correctly Boot Fitting Position [B]
Incorrectly Boot Fitting Position [C]

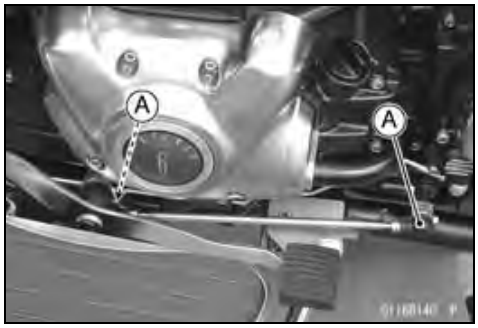

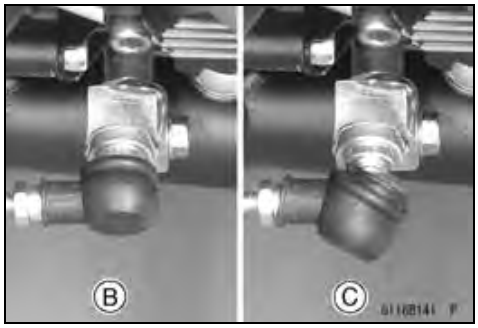

External Shift Mechanism Removal

● Remove:
Alternator Cover (see Alternator Cover Removal in the Electrical
Engine Pulley (see Engine Pulley Removal in the Final Drive chapter)
● Disconnect the gear position switch lead connector [A].



● Remove:
Engine Pulley Plate Bolts [A]
Engine Pulley Plate [B]



● Remove:
External Shift Mechanism Cover Bolts [A]
External Shift Mechanism Cover [B]

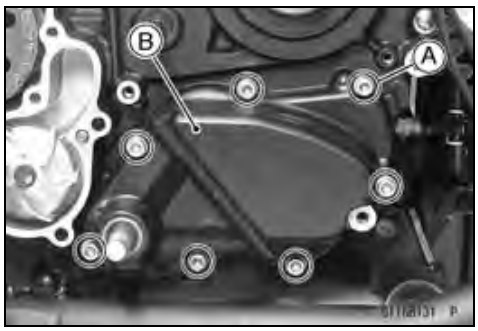

Downloaded from www.vulcanriders-sweden.org

External Shift Mechanism

● Remove the shift shaft assembly [A].



● Remove:
Gear Positioning Lever Nut [A]
Gear Positioning Lever [B]
Pin [C] and Spring



External Shift Mechanism Installation

★If the shift shaft return spring pin [A] was removed, install it as follows.

○Apply a non-permanent locking agent to the threads of the shift shaft return spring pin, and tighten it.

Torque - Shift Shaft Return Spring Pin : 39 N·m (4.0 kgf·m, 29 ft·lb)

● Install the gear positioning lever [B] as shown in the figure.
Collar [C]
Spring [D]
Washer [E]

○Install the spring so that the spring end [F] is touched to the rib [G] of the crankcase.

● Tighten:

Torque - Gear Positioning Lever Nut : 7.8 N·m (0.80 kgf·m, 69 in·lb)

● Be sure to install the spring [H] and pin [I] to hole of the shift drum holder [J].

Downloaded from www.vulcanriders-sweden.org

External Shift Mechanism

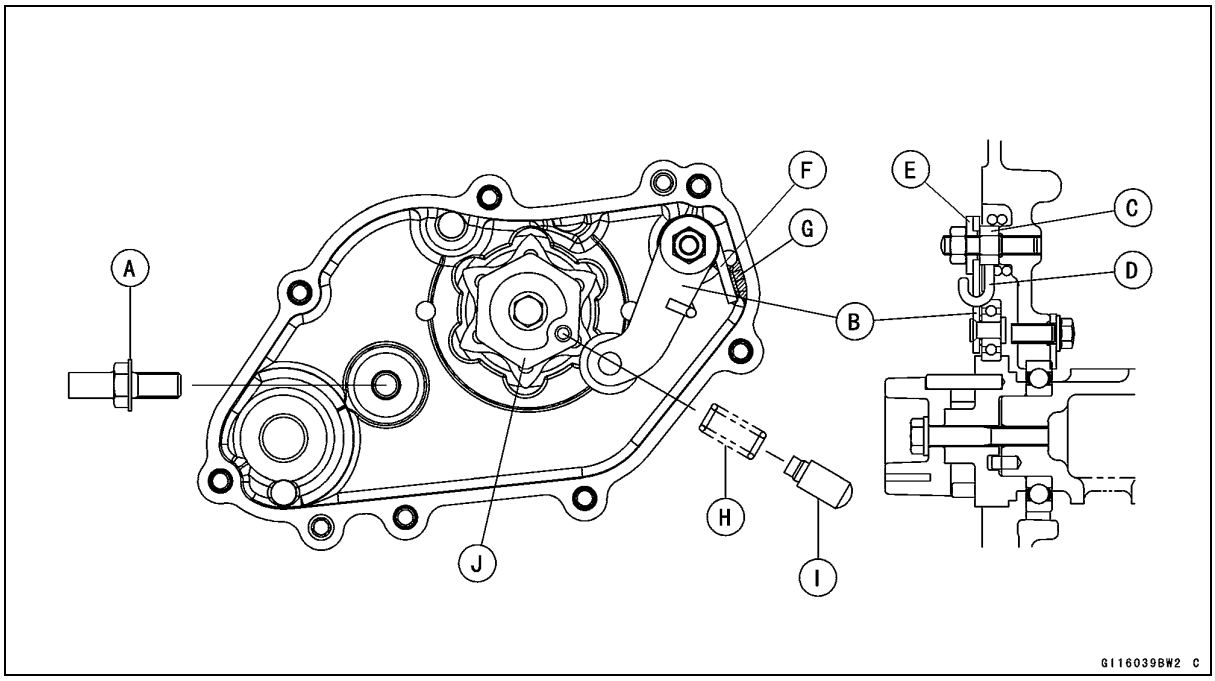

★If the shift shaft assembly was disassembled, assemble it as follows.

○Install the following parts on the shift shaft as a set.
Upper Lever [A]
Washer [B]
Spring [C]
Lower Lever [D]

○Push down [E] the above parts while opening [F] the upper lever.

○Fit the circlips [G] into the grooves of the shift shaft securely.

Special Tool - Outside Circlip Pliers : 57001-144

○Install the spring on the shift mechanism arm.

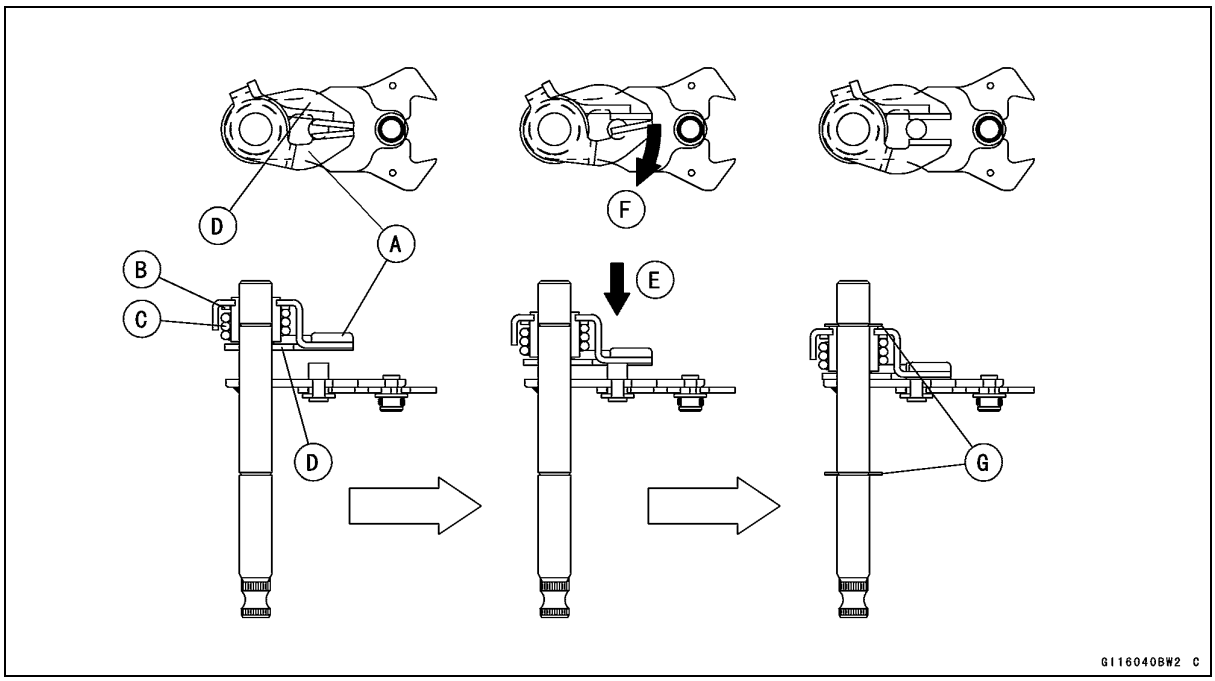

Downloaded from www.vulcanriders-sweden.org

External Shift Mechanism

● Be sure to install the spacer [A] on the shift shaft [B].

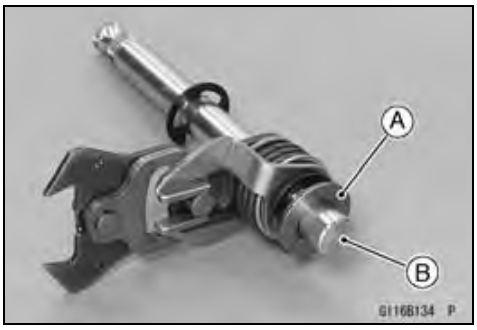

● Install the shift shaft assembly [A].
● Be sure to install the spacer [B] on the shift shaft.
● Install the dowel pins [C].

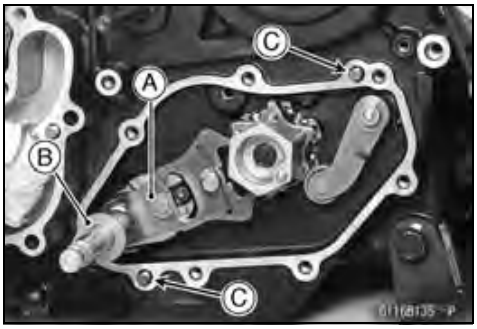

● When the new needle bearing [A] is installed in the external shift mechanism cover [B], press and insert the new needle bearing so that the bearing surface [C] is flush with the housing end of the cover.

Special Tool - Bearing Driver Set : 57001-1129

NOTE

○*Install the needle bearing so that manufacture's make face out.*

● When the new oil seal [D] is installed in the external shift mechanism cover, press and insert the new oil seal so that the oil seal surface [E] is flush with the end of the hole.

Special Tool - Bearing Driver Set : 57001-1129

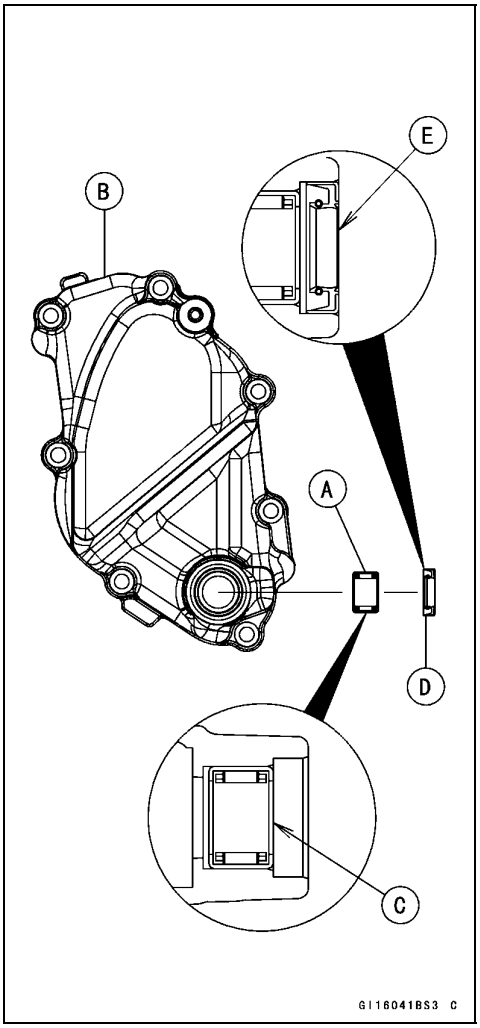

Downloaded from www.vulcanriders-sweden.org

External Shift Mechanism

- Apply silicone sealant to the gear position switch lead grommet [A].

Sealant - Kawasaki Bond (Silicone Sealant) : 92104-0004

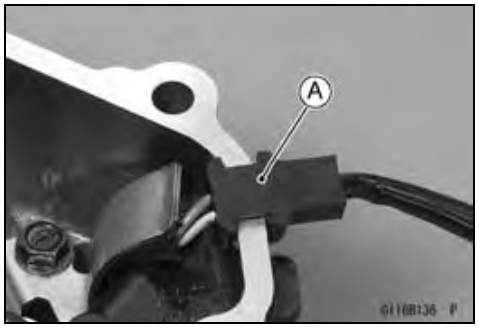

- Replace the external shift mechanism cover gasket with a new one.
- Install the external shift mechanism cover [A].
- Tighten:

Torque - External Shift Mechanism Cover Bolts : 12 N·m (1.2 kgf·m, 106 in·lb)

L = 22 mm (0.87 in.) [B]
L = 50 mm (1.97 in.) [C]

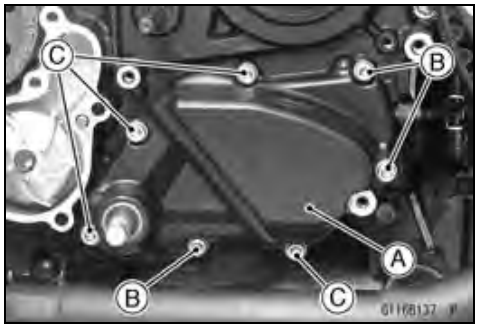

- Run the gear position switch lead [A] as shown in the figure.
- Check that the damper [B] is in place on the engine pulley plate [C].
- Tighten:

Torque - Engine Pulley Plate Bolts : 12 N·m (1.2 kgf·m, 106 in·lb)

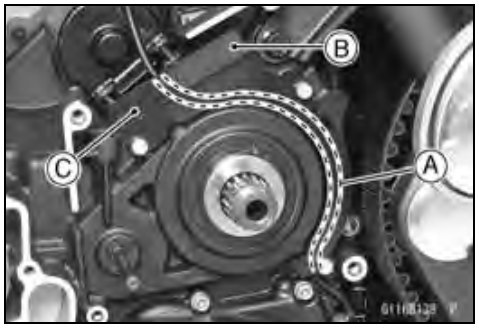

Downloaded from www.vulcanriders-sweden.org

Ball Bearing, Needle Bearing and Oil Seal

Bearing and Oil Seal Installation

Left Crankcase

- Refer to the Mechanical Seal Replacement in the Cooling System chapter for mechanical seal, ball bearing and oil seal of the water pump.
- Before installing the bearing or race, apply small amount of the engine oil to the outer surface of them.
- When the following ball bearings or race are installed in the left crankcase half, press and insert them until they are bottomed.

Special Tool - Bearing Driver Set : 57001-1129

Ball Bearing [A] for Output Shaft
Race [B] for Drive Shaft
Ball Bearing [C] for Front Balancer Shaft
Ball Bearing [D] for Rear Balancer Shaft

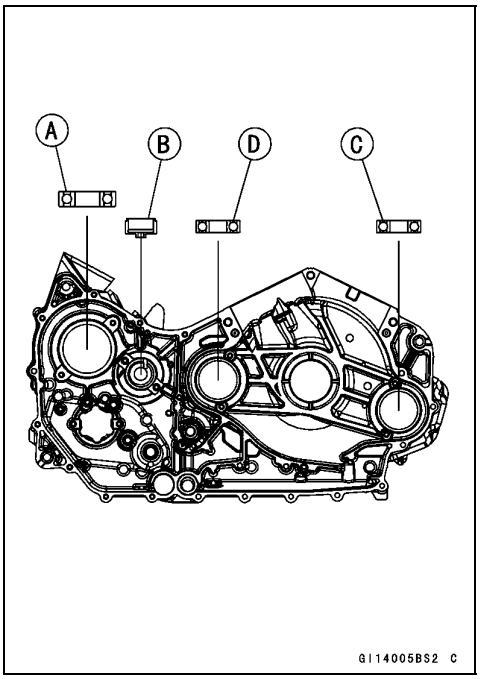

- When the oil seal [A] for clutch push rod is installed in the left crankcase half, press and insert the oil seal so that the oil seal surface [B] is flush with the end of the hole.

Special Tool - Bearing Driver Set : 57001-1129

NOTE

○*Install the oil seal so that the spring side [C] faces inside.*

- When the oil seal [D] for output shaft is installed in the left crankcase half, press and insert the oil seal so that the oil seal surface [E] is flush with the end of the hole.

Special Tool - Bearing Driver Set : 57001-1129

NOTE

○*Install the oil seal so that the spring side [F] faces inside.*

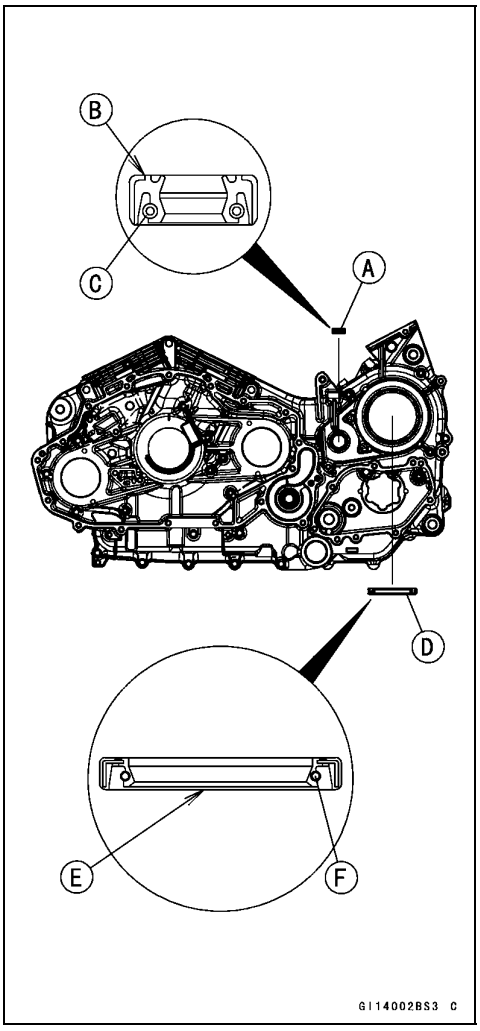

Downloaded from www.vulcanriders-sweden.org

Ball Bearing, Needle Bearing and Oil Seal

Right Crankcase

- Before installing the bearing or race, apply small amount of the engine oil to the outer surface of them.
- When the following ball bearings or race are installed in the right crankcase half, press and insert them until they are bottomed.

Special Tool - Bearing Driver Set : 57001-1129

Ball Bearing [A] for Drive Shaft
Race [B] for Output Shaft
Ball Bearing [C] for Front Balancer Shaft
Ball Bearing [D] for Rear Balancer Shaft

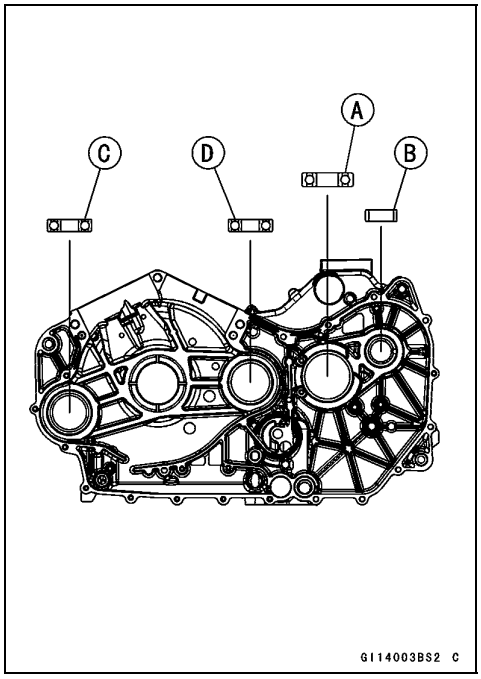

- When the needle bearing [A] for torque limiter is installed in the right crankcase half, press and insert the needle bearing until it is bottomed.

Special Tool - Bearing Driver Set : 57001-1129

NOTE

○*Install the needle bearing so that manufacture's make [B] face out.*

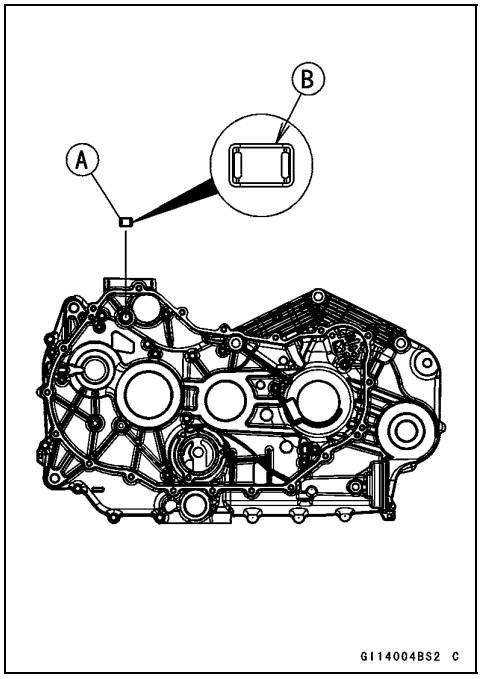

Bearing Wear

CAUTION

Do not remove the ball bearings for inspection. Removal may damage them.

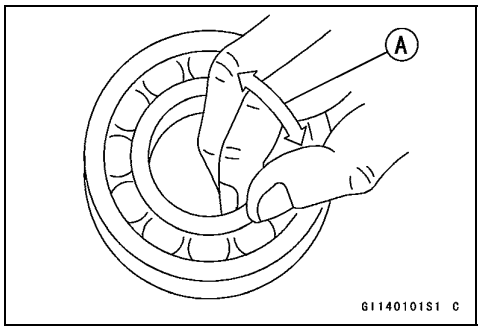

- Check the ball bearings.

○Since the ball bearings are made to extremely close tolerances, the wear must be judged by feel rather than measurement. Clean each bearing in a high-flash point solvent, dry it (do not spin the bearing while it is dry), and oil it with engine oil.

○Spin [A] the bearing by hand to check its condition.

★If the bearing is noisy, does not spin smoothly, or has any rough spots, replace it.

Downloaded from www.vulcanriders-sweden.org

Ball Bearing, Needle Bearing and Oil Seal

● Check the needle bearings.
○The rollers in a needle bearing normally wear very little, and wear is difficult to measure. Instead of measuring, inspect the bearing for abrasion, color change, or other damage.
★If there is any doubt as to the condition of a needle bearing, replace it.

Oil Seal Inspection

● Inspect the oil seal.
★Replace it if the lips are misshapen, discolored (indicating that the rubber has deteriorated), hardened or otherwise damaged.

Downloaded from www.vulcanriders-sweden.org

Wheels/Tires

Table of Contents

Exploded View 10-2
Specifications 10-4
Special Tools 10-5
Wheels (Rims) 10-6
- Front Wheel Removal 10-6
- Front Wheel Installation 10-7
- Rear Wheel Removal 10-8
- Rear Wheel Installation 10-9
- Wheel Inspection 10-11
- Axle Inspection 10-11
- Balance Inspection 10-12
- Balance Adjustment 10-12
- Balance Weight Removal 10-12
- Balance Weight Installation 10-12

Tires 10-14
- Air Pressure Inspection/Adjustment 10-14
- Tire Inspection 10-14
- Tire Removal 10-14
- Tire Installation 10-14
- Tire Repair 10-16

Hub Bearing 10-17
- Hub Bearings Removal 10-17
- Hub Bearings Installation 10-17
- Hub Bearings Inspection 10-18
- Hub Bearings Lubrication 10-18

Downloaded from www.vulcanriders-sweden.org

Exploded View

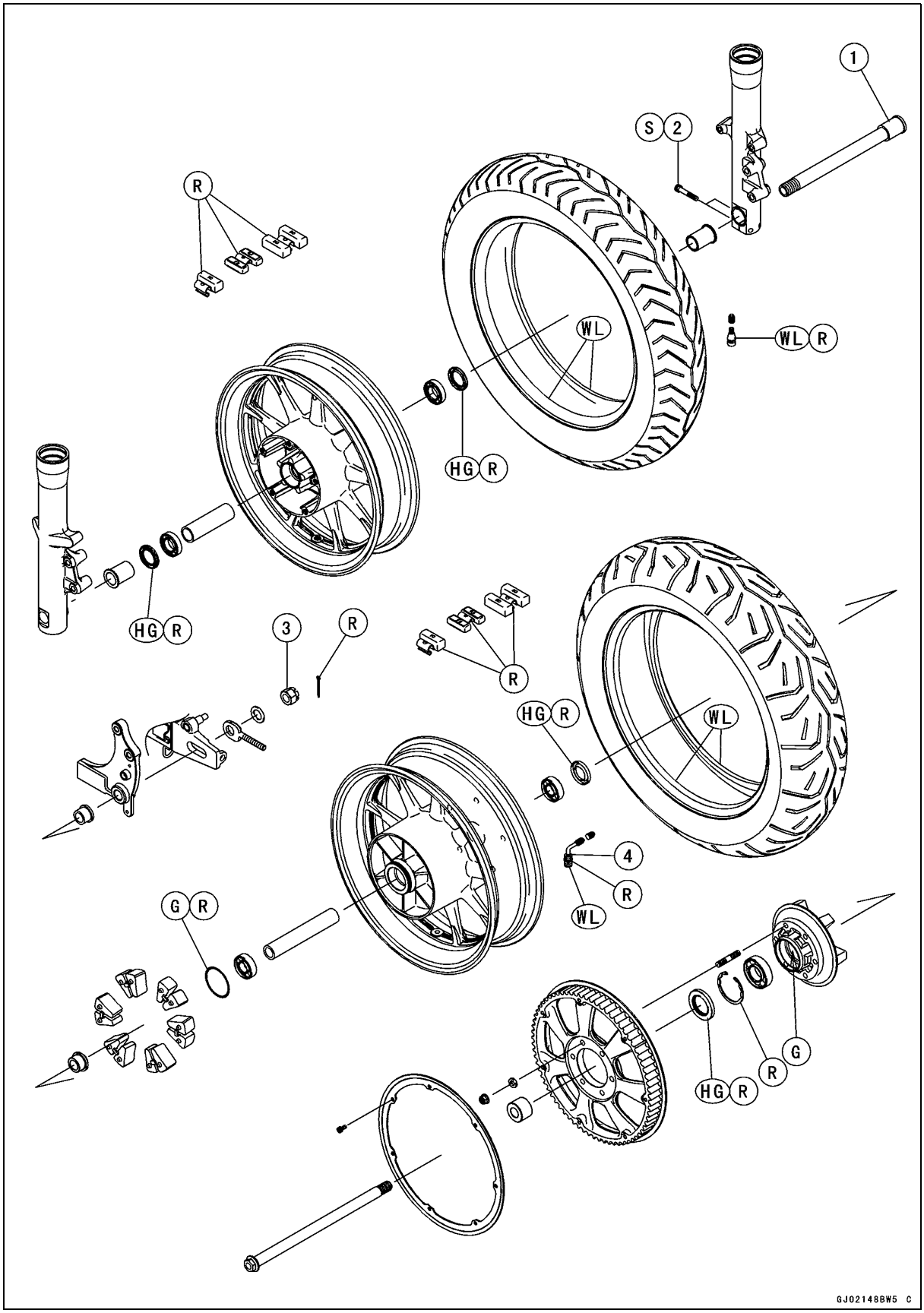

Downloaded from www.vulcanriders-sweden.org

Exploded View

No.	Fastener	Torque			Remarks
		N·m	kgf·m	ft·lb	
1	Front Axle	127	13.0	94	
2	Front Axle Clamp Bolts	20	2.0	15	S
3	Rear Axle Nut	108	11.0	80	
4	Rear Air Valve Nuts	1.5	0.15	13 in·lb	

G: Apply grease.
HG: Apply high-temperature grease.
R: Replacement Parts
S: Follow the specified tightening sequence.
WL: Apply soap and water solution or rubber lubricant.

Downloaded from www.vulcanriders-sweden.org

Specifications

Item	Standard	Service Limit
Wheels (Rims)		
Rim Runout:		
Axial	TIR 0.5 mm (0.02 in.) or less	TIR 1.0 mm (0.04 in.)
Radial	TIR 0.8 mm (0.03 in.) or less	TIR 1.0 mm (0.04 in.)
Axle Runout/100 mm (3.94 in.)	TIR 0.03 mm (0.001 in.) or less	TIR 0.2 mm (0.008 in.)
Wheel Balance	10 g (0.35 oz.) or less	– – –
Balance Weights	10 g (0.35 oz.), 20 g (0.71 oz.), 30 g (1.06 oz.)	– – –
Rim Size:		
Front	16 × 3.50	– – –
Rear	16 × 4.50	– – –
Tires		
Air Pressure (when Cold):		
Front	Up to 180 kg (397 lb) load: 200 kPa (2.00 kgf/cm², 28 psi)	– – –
Rear	Up to 97.5 kg (215 lb) load: 250 kPa (2.50 kgf/cm², 36 psi)	– – –
	97.5 kg ~ 180 kg (215 lb ~ 397 lb) load: 280 kPa (2.80 kgf/cm², 40 psi)	– – –
Tread Depth:		
Front	4.3 mm (0.17 in.)	1 mm (0.04 in.) (AT, CH, DE) 1.6 mm (0.06 in.)
Rear	7.2 mm (0.28 in.)	Up to 130 km/h (80 mph): 2 mm (0.08 in.) Over 130 km/h (80 mph): 3 mm (0.12 in.)
Standard Tires:	**Make, Type**	**Size**
Front	BRIDGESTONE, EXEDRA G721 E	130/90-B16 M/C 67H
Rear	BRIDGESTONE, EXEDRA G722 E	170/70-B16 M/C 75H

⚠ WARNING

Use the same manufacturer's tires on both front and rear wheels.

Downloaded from www.vulcanriders-sweden.org

Special Tools

Inside Circlip Pliers:
57001-143

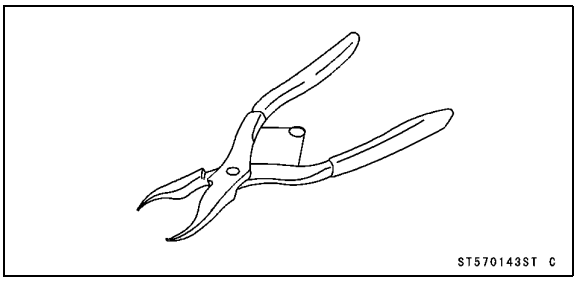

Bearing Driver Set:
57001-1129

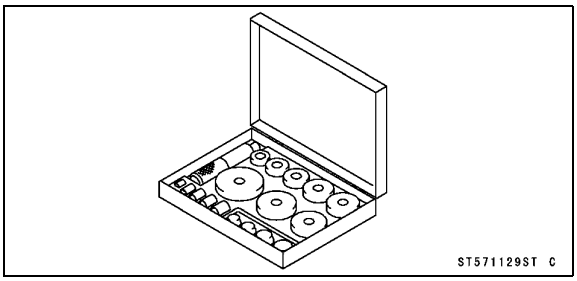

Jack:
57001-1238

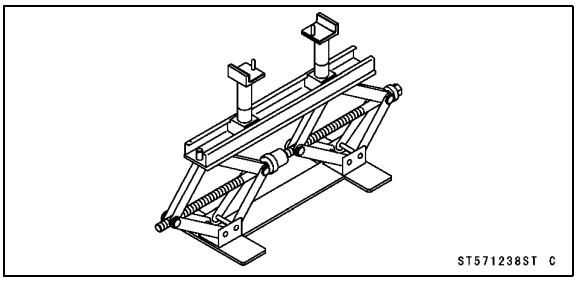

Bearing Remover Head, ϕ20 × ϕ22:
57001-1293

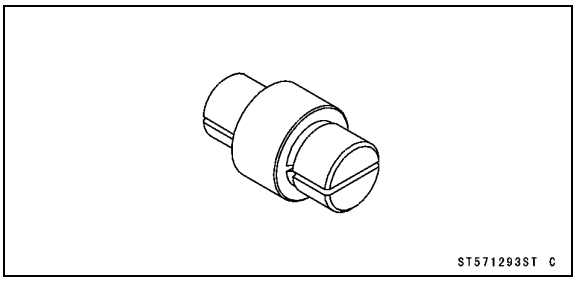

Bearing Remover Head, ϕ25 × ϕ28:
57001-1346

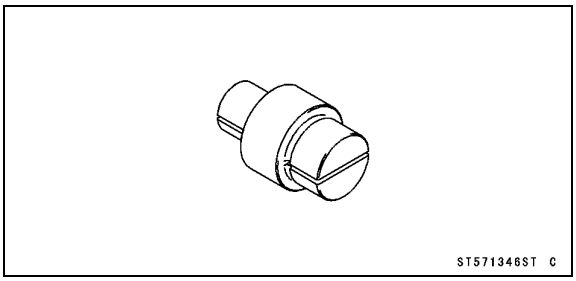

Bearing Remover Shaft, ϕ13:
57001-1377

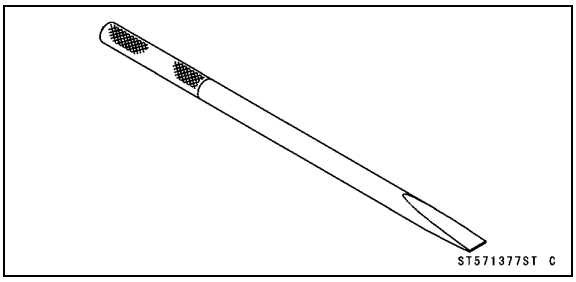

Downloaded from www.vulcanriders-sweden.org

Wheels (Rims)

Front Wheel Removal

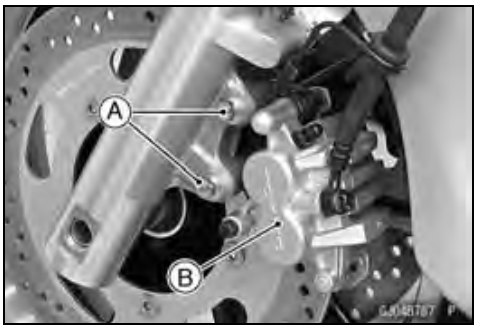

- Remove:
  Front Caliper Mounting Bolts [A] (Both Sides)
  Front Caliper (with the hose installed) [B] (Both Sides)

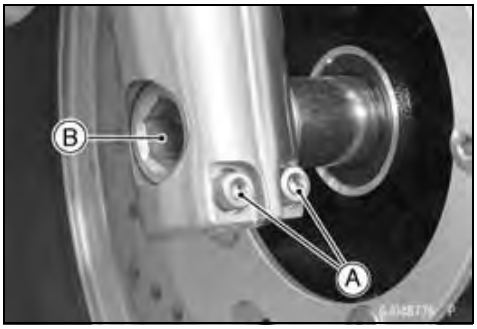

- Loosen:
  Front Axle Clamp Bolts [A]
  Front Axle [B]

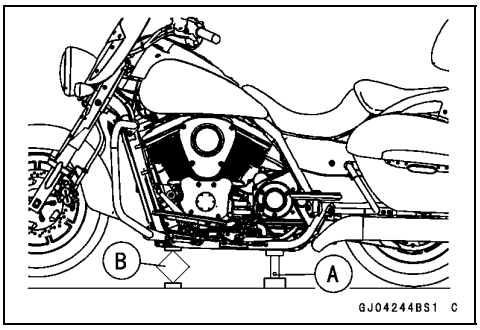

- Using the jack [A] under the frame pipe, and a commercially available jack [B] under the engine, lift the front wheel off the ground until the rear wheel touches the ground.

  Special Tool - Jack: 57001-1238

CAUTION

Be sure to put the rear wheel on the ground when removing the front wheel, or the motorcycle may fall over. The motorcycle could be damaged.

⚠ WARNING

Be sure to put the rear wheel on the ground when removing the front wheel, or the motorcycle may fall over. It could cause an accident and injury.

- Remove the axle, and take off the front wheel.

CAUTION

Do not lay the wheel directly on the ground with the disc facing down. This can damage or warp the disc. Place blocks to under the wheel so that the disc does not touch the ground.

Downloaded from www.vulcanriders-sweden.org

Wheels (Rims)

Front Wheel Installation

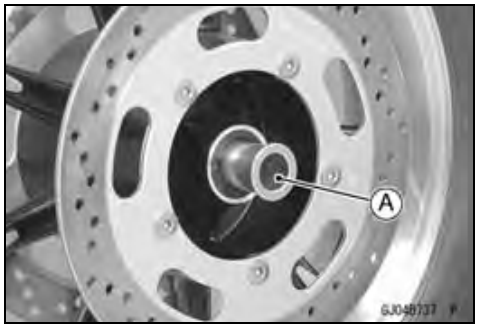

- Apply high-temperature grease to the grease seal lips.
- Fit the collars [A] on both sides of the hub.

○The collars are identical.

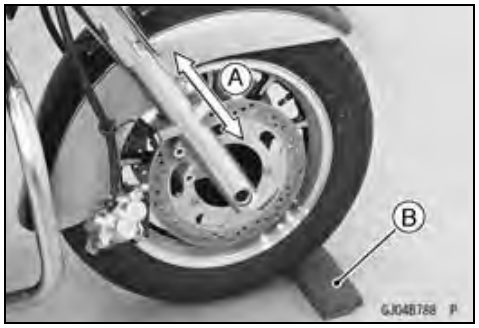

- Install the front wheel, and insert the front axle.
- Remove the commercially available jack.
- Tighten:

Torque - Front Axle : 127 N·m (13.0 kgf·m, 94 ft·lb)

- Before tightening the front axle clamp bolts, pump the forks up and down [A] 4 or 5 times to allow the right fork leg to find a neutral position on the front axle.

NOTE

○Put a block [B] in front of the wheel to stop moving.
○Do not apply the front brake.

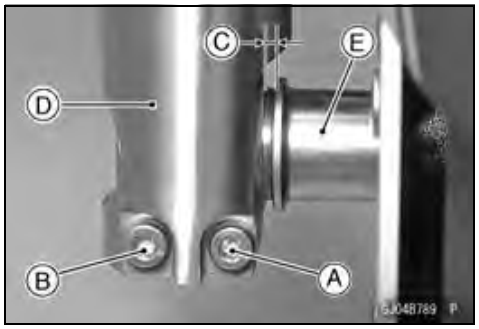

- Tighten:

Torque - Front Axle Clamp Bolts: 20 N·m (2.0 kgf·m, 15 ft·lb)

○Tighten the inner bolt [A] first, tighten the outer bolt [B] second, and then tighten the inner bolt again.

- Check the clearance [C] between the right fork leg [D] and collar [E]. There should be about **2.0 mm (0.08 in.)** of clearance.

★If the clearance is out of this range, remove the front wheel again and check the axle, wheel hub and other related parts for damage.

- Install the front calipers (see Caliper Installation in the Brakes chapter).
- Check the front brake effectiveness.

⚠ WARNING

Do not attempt to ride the motorcycle until a full brake lever is obtained by pumping the brake lever until the pads are against the disc. The brakes will not function on the first application of the lever if this is not done.

Downloaded from www.vulcanriders-sweden.org

Wheels (Rims)

Rear Wheel Removal

- Remove:
  Saddlebags (see Saddlebag Removal in the Frame chapter)
  Saddlebag Stays (see Saddlebag Stay Removal in the Frame chapter)
  Right Muffler Body (see Muffler Body Removal in the Engine Top End chapter)
  Rear Fender (see Rear Fender Removal in the Frame chapter)
- Using the jack under the frame pipe, raise the rear wheel off the ground.

Special Tool - Jack: 57001-1238

CAUTION

Be sure to put the front wheel on the ground when removing the rear wheel, or the motorcycle may fall over. The motorcycle could be damaged.

⚠ WARNING

Be sure to put the front wheel on the ground when removing the rear wheel, or the motorcycle may fall over. It could cause an accident and injury.

- Remove the bolts [A], and take off the belt cover [B].

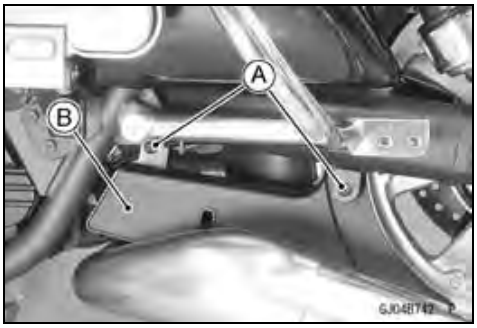

- Squeeze the brake lever slowly and hold it with a band [A].



CAUTION

Be sure to hold the front brake when removing the rear wheel, or the motorcycle may fall over. The motorcycle could be damaged.

⚠ WARNING

Be sure to hold the front brake when removing the rear wheel, or the motorcycle may fall over. It could cause an accident and injury.

Downloaded from www.vulcanriders-sweden.org

Wheels (Rims)

● Remove:
Bolt [A] and Brake Hose Guide [B]
Rear Caliper Mounting Bolts [C]
Rear Caliper (with the hose installed) [D]

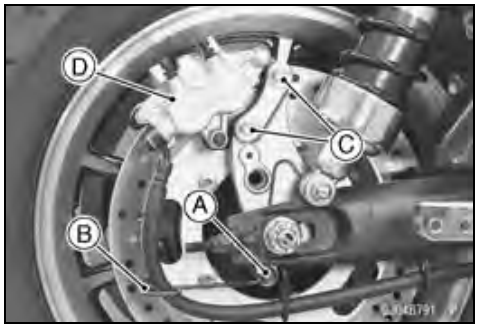

● Remove:
Cotter Pin [A]
Rear Axle Nut [B]
Washer [C]
● Loosen:
Belt Adjuster Locknuts [D] (Both Sides)
Belt Adjuster Nuts [E] (Both Sides)

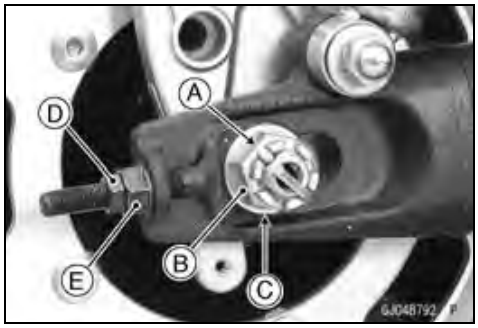

● Pull out the rear axle.
● Clear the drive belt [A] from the rear pulley [B].
● Remove the rear wheel.

CAUTION

Do not lay the wheel directly on the ground with the disc facing down. This can damage or warp the disc. Place blocks to under the wheel so that the disc does not touch the ground.



Rear Wheel Installation

● Apply high-temperature grease to the grease seal lips on both sides of the hub.
● Fit the collars [A] on both sides of the hub.
○Fit the flange collar onto the right side.

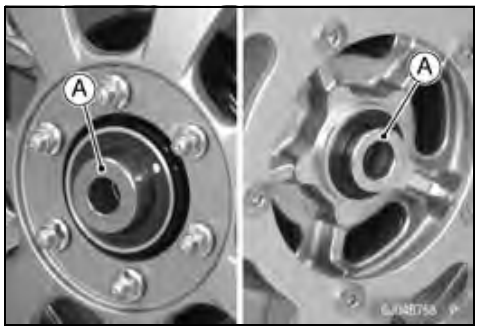

● Turn the stepped side [A] of the belt adjusters outward.

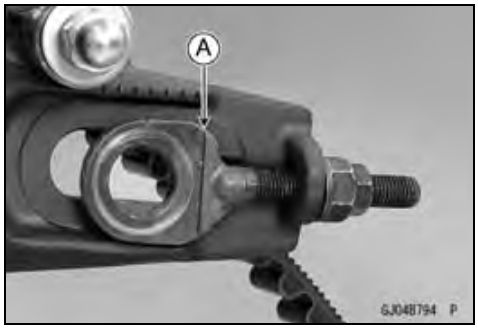

Downloaded from www.vulcanriders-sweden.org

Wheels (Rims)

● Install the caliper bracket [A] onto the swingarm stop [B].

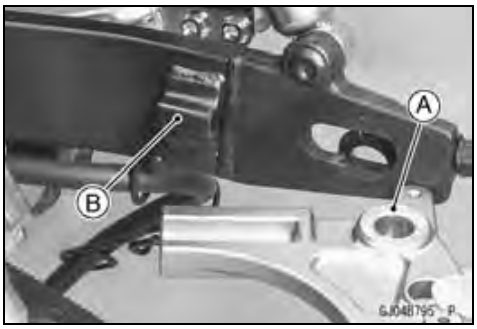

● Engage the drive belt [A] with the rear pulley [B].
● Insert the axle from the left side.
● Adjust the belt deflection before tightening the axle nut (see Belt Deflection Adjustment in the Periodic Maintenance chapter).
● Tighten:

Torque - Rear Axle Nut: 108 N·m (11.0 kgf·m, 80 ft·lb)



● Insert a new cotter pin [A].

NOTE

○*When inserting the cotter pin, if the slots in the nut do not align with the cotter pin hole in the axle, tighten the nut clockwise [B] up to next alignment.*
○*It should be within 30°.*
○*Loosen once and tighten again when the slot goes past the nearest hole.*

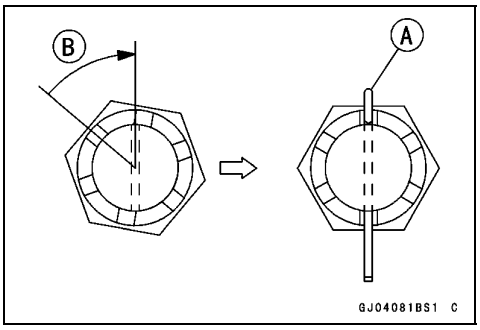

● Bend the cotter pin [A] over the nut .

⚠ WARNING

If the rear axle nut is not securely tightened or the cotter pin is not installed, an unsafe riding condition may result.

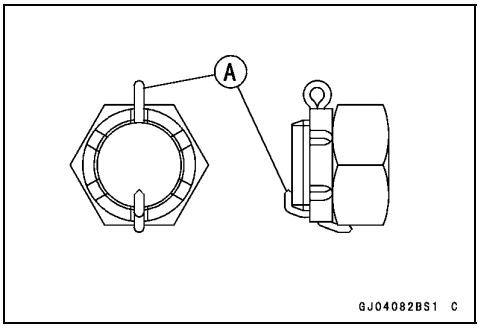

● Install the removed parts (see appropriate chapters).
● Check that the drive belt does not touch the belt cover and other parts.
● Check the rear brake effectiveness (see Brake Operation Inspection in the Periodic Maintenance chapter).

⚠ WARNING

Do not attempt to drive the motorcycle until a full brake pedal is obtained by pumping the brake pedal until the pads are against the disc. The brake will not function on the first application of the pedal if this is not done.

Downloaded from www.vulcanriders-sweden.org

Wheels (Rims)

Wheel Inspection

● Raise the wheel off the ground with the jack.

Special Tool - Jack: 57001-1238

● Spin the wheel lightly, and check for roughness or binding.
★If roughness or binding is found, replace the hub bearings.
● Inspect the wheel for small cracks, dents, bending, or warp.
★If there is any damage to the wheel, replace the wheel.

● Remove the wheel, and support it with the tire by the axle.
● Measure the rim runout, axial [A] and radial [B], with a dial gauge.
★If rim runout exceeds the service limit, check the hub bearings.
★If the problem is not due to the bearings, replace the wheel.

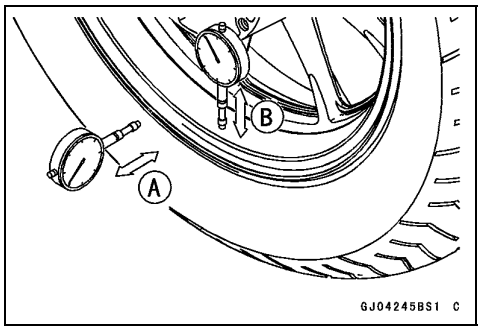

Rim Runout (with tire installed)
Standard:

Axial	**TIR 0.5 mm (0.02 in.) or less**
Radial	**TIR 0.8 mm (0.03 in.) or less**

Service Limit:

Axial	**TIR 1.0 mm (0.04 in.)**
Radial	**TIR 1.0 mm (0.04 in.)**

⚠ WARNING

Never attempt to repair a damaged wheel. If there is any damage besides wheel bearings, the wheel must be replaced to insure safe operational condition.

Axle Inspection

● Remove the front and rear axles (see Front/Rear Wheel Removal).
● Visually inspect the front and rear axles for damages.
★If the axle is damaged or bent, replace it.
● Place the axle in V blocks that are 100 mm (3.94 in.) [A] apart, and set a dial gauge [B] on the axle at a point halfway between the blocks. Turn [C] the axle to measure the runout. The difference between the highest and lowest dial readings is the amount of runout.
★If axle runout exceeds the service limit, replace the axle.

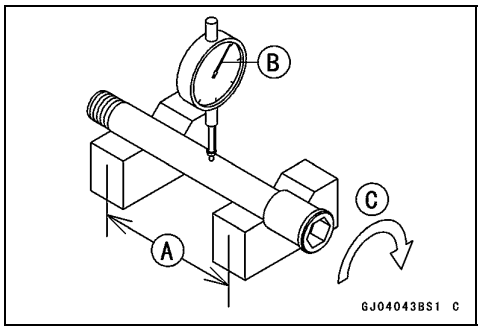

Axle Runout/100 mm (3.94 in.)

Standard:	**TIR 0.03 mm (0.001 in.) or less**
Service Limit:	**TIR 0.2 mm (0.008 in.)**

Downloaded from www.vulcanriders-sweden.org

Wheels (Rims)

Balance Inspection

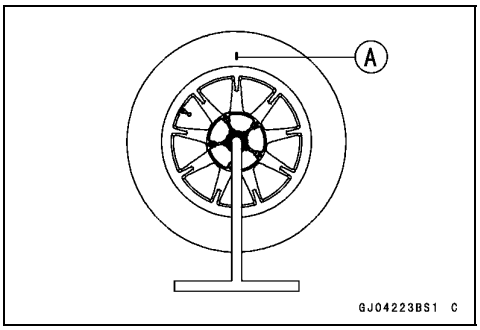

- Remove the front and rear wheels (see Front/Rear Wheel Removal).
- Support the wheel so that it can be spun freely.
- Spin the wheel lightly, and mark [A] the wheel at the top when the wheel stops.

○Repeat this procedure several times. If the wheel stops of its own accord in various positions, it is well balanced.

★If the wheel always stops in one position, adjust the wheel balance (see Balance Adjustment).

Balance Adjustment

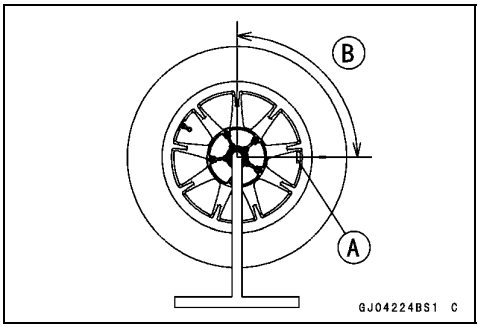

★If the wheel always stops in one position, provisionally attach a balance weight [A] on the rim at the marking using adhesive tape.

- Rotate the wheel 1/4 turn [B], and see whether or not the wheel stops in this position. If it does, the correct balance weight is being used.

★If the wheel rotates and the weight goes up, replace the weight with the next heavier size. If the wheel rotates and the weight goes down, replace the weight with the next lighter size. Repeat these steps until the wheel remains at rest after being rotated 1/4 turn.

- Rotate the wheel another 1/4 turn and then another 1/4 turn to see if the wheel is correctly balanced.
- Repeat the entire procedure as many times as necessary to achieve correct wheel balance.
- Permanently install the balance weight.

Balance Weight Removal

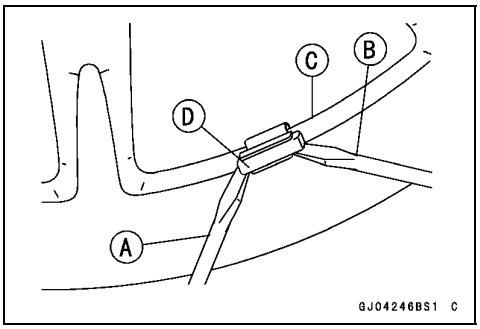

- Insert screwdrivers [A] [B] between the rib [C] and weight [D] as shown in the figure.
- Pry the balance weight with two screwdrivers and remove the balance weight.
- Discard the used balance weight.

CAUTION

Do not tap the screwdrivers. The rim could be damaged.

Balance Weight Installation

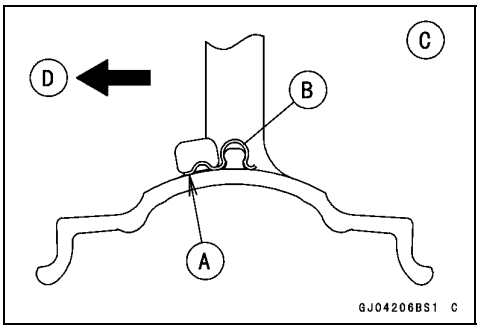

- Check if the weight portion has any play on the blade [A] and clip [B].
  Rear View [C]
  Left Side [D]

★If it does, discard it.

⚠ WARNING

If the balance weight has any play on the rib of the rim, the blade and/or clip have been stretched. Replace the loose balance weight.
Do not reuse used balance weight.
Unbalanced wheels can create an unsafe riding condition.

Downloaded from www.vulcanriders-sweden.org

Wheels (Rims)

Balance Weight

Part Number	Weight
41075-0007	10 g (0.35 oz.)
41075-0018	20 g (0.71 oz.)
41075-0017	30 g (1.06 oz.)

NOTE

○*Balance weights are available from Kawasaki dealers in 10, 20 and 30 g (0.35, 0.71 and 1.06 oz.) sizes. An imbalance of less than 10 g (0.35 oz.) will not usually affect running stability.*

○*Do not use five or more balance weights (more than 90 g, 3.17 oz.). If the wheel requires an excess balance weight, disassemble the wheel to find the cause.*

● Slip the balance weight [A] on to the rib [B], by pushing or tapping [C] the clip [D].
Rear View [E]
Left Side [F]

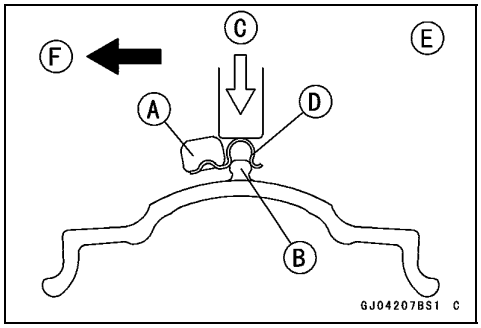

● Be sure to install the balance weight.

○Check that the blade [A] and clip [B] are fully seated on the rim [C] and that the clip is hooked over the rib [D].
Rear View [E]
Left Side [F]

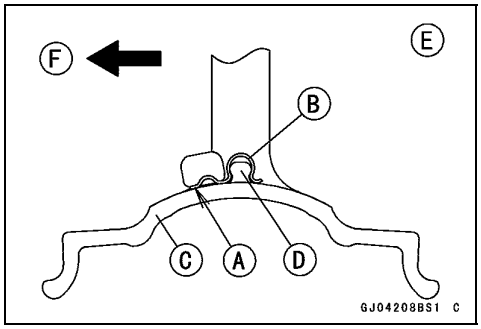

Downloaded from www.vulcanriders-sweden.org

Tires

Air Pressure Inspection/Adjustment

- Refer to the Air Pressure Inspection in the Periodic Maintenance chapter.

Tire Inspection

- Refer to the Wheel/Tire Damage Inspection in the Periodic Maintenance chapter.

Tire Removal

- Remove:
  Wheel (see Front/Rear Wheel Removal)
  Valve Core (Let out the air)
- To maintain wheel balance, mark the air valve position on the tire with chalk so that the tire can be reinstalled in the same position.
  Chalk Mark or Yellow Mark [A]
  Air Valve [B]
  Align [C]

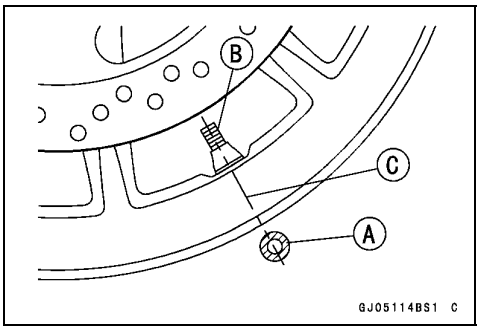

- Lubricate the tire beads and rim flanges on both sides with a soap and water solution or rubber lubricant. This helps the tire beads slip off the rim flanges.

CAUTION

Never lubricate with engine oil or petroleum distillates because they will deteriorate the tire.

- Remove the tire from the rim using a suitable commercially available tire changer.

NOTE

○*The tires cannot be removed with hand tools because they fit the rims too tightly.*

Tire Installation

⚠ WARNING

Use the same manufacturer's tires on both front and rear wheels.

- Inspect the rim and tire, and replace them if necessary.
- Clean the sealing surfaces of the rim and tire, and smooth the sealing surfaces of the rim with a fine emery cloth if necessary.
- Remove the air valve and discard it.

CAUTION

Replace the air valve whenever the tire is replaced. Do not reuse the air valve.

Downloaded from www.vulcanriders-sweden.org

Tires

● Install a new valve in the rim.

Front

○Remove the valve cap, lubricate the stem seal [A] with a soap and water solution or rubber lubricant, and pull [B] the valve stem through the rim from the inside out until it snaps into place.

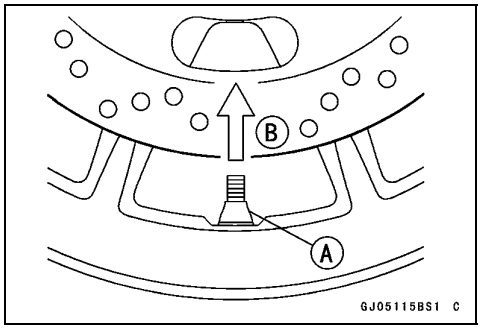

CAUTION

Do not use engine oil or petroleum distillates to lubricate the stem because they will deteriorate the rubber.

○The air valve is shown in the figure.
Valve Cap [A]
Valve Core [B]
Stem Seal [C]
Valve Stem [D]
Valve Seat [E]
Valve Opened [F]

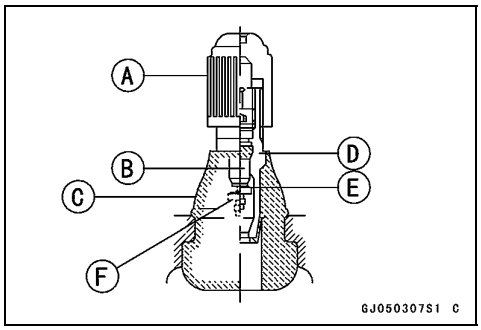

Rear

○Insert the new air valve in the rear wheel rim.
Rear View [A]
Valve Body [B]
Valve Nuts [C]
Valve Washer [D]
Rim [E]
Right Side [F]

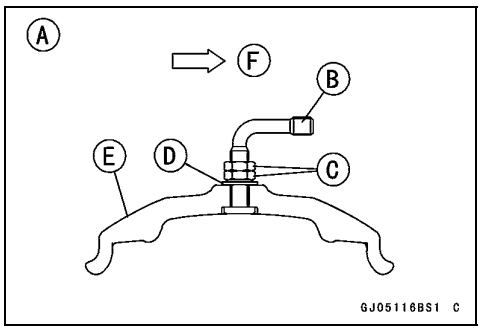

○Remove the valve cap, valve nuts, valve washer and insert the valve stem through the rim from the inside out.

Torque - Rear Air Valve Nuts: 1.5 N·m (0.15 kgf·m, 13 in·lb)

○Install the valve cap.

● Apply a soap and water solution or rubber lubricant to the rim flange and tire beads.

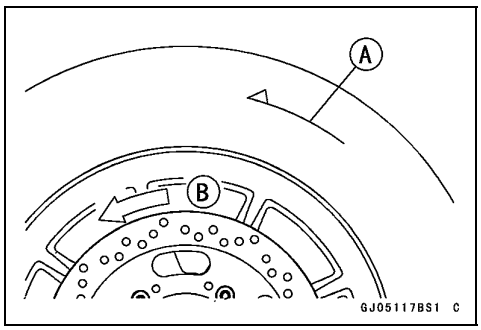

CAUTION

Never lubricate with engine oil or petroleum distillates because they will deteriorate the tire.

● Check the tire rotation mark on the front and rear tires and install them on the rim accordingly.
Tire Rotation Mark [A]
Rotating Direction [B]

Downloaded from www.vulcanriders-sweden.org

Tires

- Position the tire on the rim so that the valve [A] align with the tire balance mark [B] (the chalk mark made during removal, or the yellow paint mark on a new tire).
- Install the tire bead over the rim flange using a suitable commercially available tire changer.
- Lubricate the tire beads and rim flanges with a soap and water solution or rubber lubricant to help seat the tire beads in the sealing surfaces of the rim while inflating the tire.
- Center the rim in the tire beads, and inflate the tire with compressed air until the tire beads seat in the sealing surfaces.

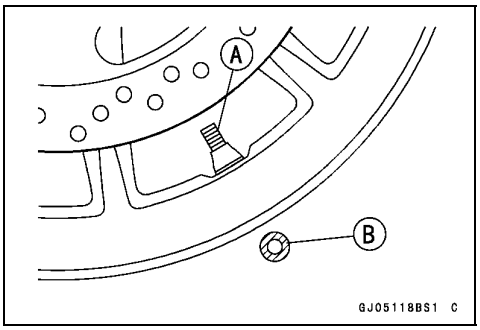

⚠ WARNING

Be sure to install the valve core whenever inflating the tire, and do not inflate the tire to more than 400 kPa (4.0 kgf/cm², 57 psi). Overinflation can explode the tire with possibility of injury and loss of life.

- Check to see that the bead lines [A] on both sides of the tire sidewalls are parallel with the rim flanges.

★If the rim flanges and tire sidewall bead lines are not parallel, remove the valve core.

- Lubricate the rim flanges and tire beads.
- Install the valve core and inflate the tire again.
- After the tire beads seat in the rim flanges, check for air leakage.

○Inflate the tire slightly above standard inflation.

○Use a soap and water solution or submerge the tire, and check for bubbles that would indicate leakage.

- Adjust the air pressure to the specified pressure (see Air Pressure Inspection in the Periodic Maintenance chapter).
- Adjust the wheel balance (see Balance Adjustment).

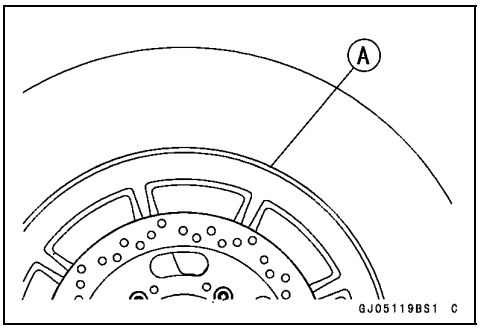

Tire Repair

Currently two types of repair for tubeless tires have come into wide use. One type is called a temporary (external) repair which can be carried out without removing the tire from the rim, and the other type is called permanent (internal) repair which requires tire removal. It is generally understood that higher running durability is obtained by permanent (internal) repairs than by temporary (external) ones. Also, permanent (internal) repairs have the advantage of permitting a thorough examination for secondary damage not visible from external inspection of the tire. For these reasons, Kawasaki does not recommend temporary (external) repair. Only appropriate permanent (internal) repairs are recommended. Repair methods may vary slightly from make to make. Follow the repair methods indicated by the manufacturer of the repair tools and materials so that safe results can be obtained.

Downloaded from www.vulcanriders-sweden.org

Hub Bearing

Hub Bearings Removal

- Remove the wheel, and take out the following.
  Front Hub [A]
  Rear Hub [B]
  Collars
  Coupling [C]
  Grease Seals [D]

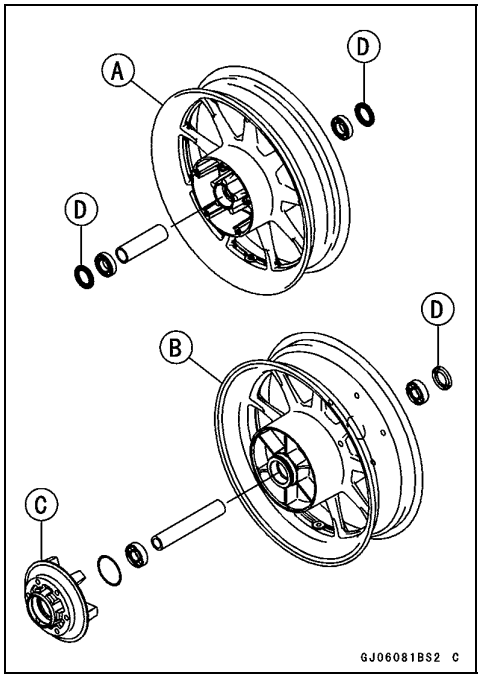

- Use the bearing remover to remove the hub bearings [A].

CAUTION

Do not lay the wheel directly on the ground with the disc facing down. This can damage or warp the disc. Place blocks to under the wheel so that the disc does not touch the ground.

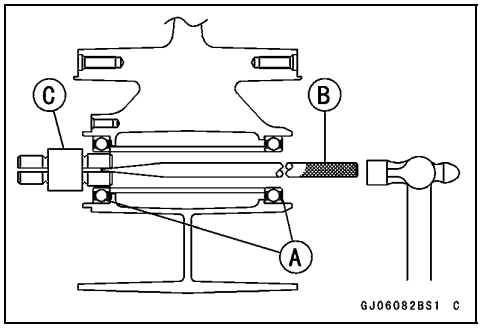

Special Tools - Bearing Remover Shaft, ϕ13 [B]: 57001 -1377
Bearing Remover Head, ϕ25 × ϕ28 [C]: 57001-1346 (for Front Hub)
Bearing Remover Head, ϕ20 × ϕ22: 57001 -1293 (for Rear Hub)

Hub Bearings Installation

- Before installing the wheel bearings, blow any dirt or foreign particles out of the hub with compressed air to prevent contamination of the bearings.
- Replace the bearings with new ones.

NOTE

○*Install the bearings so that the marked side faces out.*

- Install the bearings by using a bearing driver.
- First, press each right bearing [A] in until it bottoms out.

Special Tool - Bearing Driver Set [B]: 57001-1129

- Next, install the following.
  New Circlip
  Distance Collar
  Left Bearing

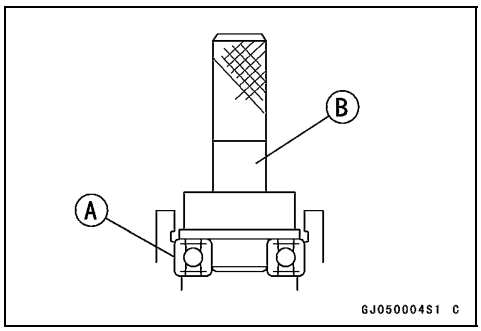

Downloaded from www.vulcanriders-sweden.org

Hub Bearing

○Replace the circlips with new ones.

Special Tool - Inside Circlip Pliers: 57001-143

● Replace the grease seals with new ones.
● Press in the grease seals [A] so that the seal surface is flush [B] with the end of the hole.
○Apply high-temperature grease to the grease seal lips.

Special Tool - Bearing Driver Set [C]: 57001-1129

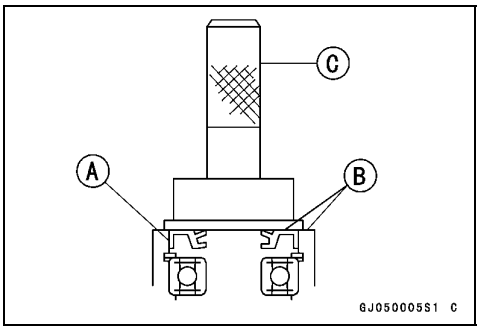

Hub Bearings Inspection

○Since the hub bearings are made to extremely close tolerance, the clearance cannot normally be measured.

NOTE

○*Do not remove any bearings for inspection. If any bearings are removed, they will need to be replaced with new ones.*

● Turn each bearing in the hub back and forth [A] while checking for plays, roughness, or binding.
★If bearing play, roughness, or binding is found, replace the bearing.
● Examine the bearing seal [B] for tears or leakage.
★If the seal is torn or is leaking, replace the bearing.

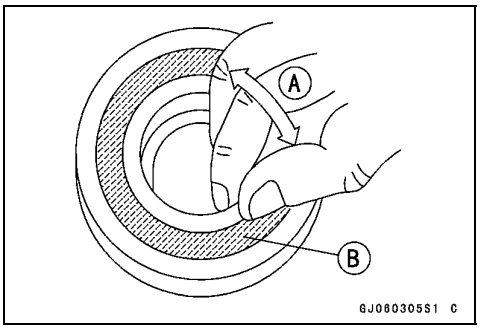

Hub Bearings Lubrication

NOTE

○*Since the hub bearings are packed with grease and sealed, lubrication is not required.*

Downloaded from www.vulcanriders-sweden.org

Final Drive

Table of Contents

Exploded View 11-2
Specifications 11-4
Special Tools 11-5
Drive Belt 11-6
- Belt Handling Precautions 11-6
- Drive Belt Wear Inspection 11-7
- Drive Belt Deflection Inspection 11-7
- Drive Belt Deflection Adjustment 11-7
- Drive Belt Removal 11-7
- Drive Belt Installation 11-8

Pulley and Coupling 11-9
- Engine Pulley Outer Cover Removal 11-9
- Engine Pulley Outer Cover Installation 11-9
- Engine Pulley Inner Cover Removal 11-9
- Engine Pulley Inner Cover Installation 11-9
- Engine Pulley Removal 11-10
- Engine Pulley Installation 11-11
- Rear Pulley Removal 11-11
- Rear Pulley Installation 11-11
- Rear Pulley Coupling Installation 11-12
- Pulley Wear Inspection 11-12
- Coupling Bearing Removal 11-12
- Coupling Bearing Installation 11-13
- Coupling Bearing Inspection 11-13
- Coupling Bearing Lubrication 11-14
- Rubber Damper Inspection 11-14

Downloaded from www.vulcanriders-sweden.org

Exploded View

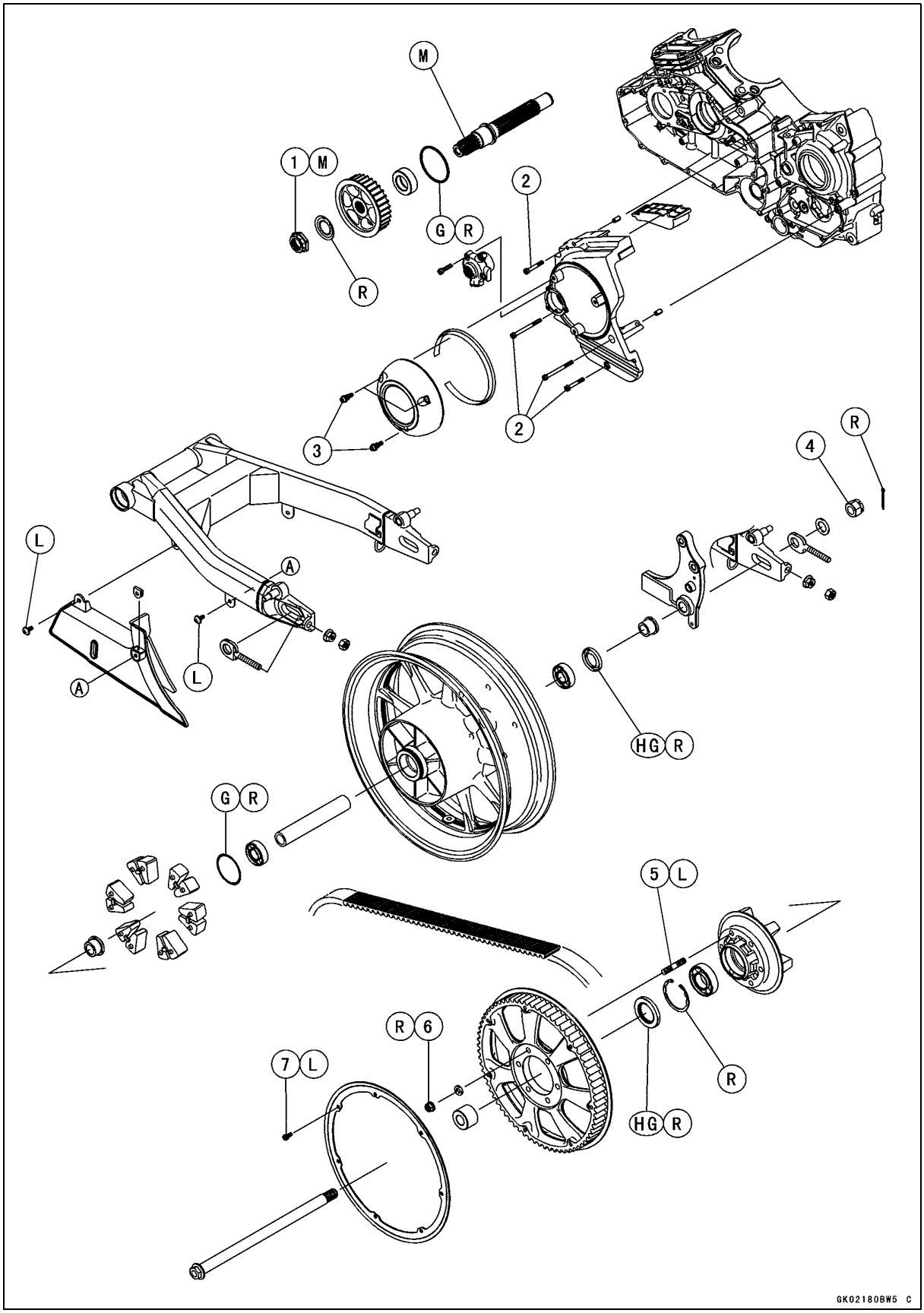

Downloaded from www.vulcanriders-sweden.org

Exploded View

No.	Fastener	Torque			Remarks
		N·m	kgf·m	ft·lb	
1	Engine Pulley Mounting Nut	175	18.0	129	M
2	Engine Pulley Inner Cover Bolts	12	1.2	106 in·lb	
3	Engine Pulley Outer Cover Bolts	9.8	1.0	87 in·lb	
4	Rear Axle Nut	108	11.0	80	
5	Rear Coupling Stud Bolts	44	4.5	33	L
6	Rear Pulley Mounting Nuts	59	6.0	44	R
7	Rear Pulley Plate Bolts	6.9	0.70	61 in·lb	L

G: Apply grease.
HG: Apply high-temperature grease.
L: Apply a non-permanent locking agent.
M: Apply molybdenum disulfide grease.
R: Replacement Parts

Downloaded from www.vulcanriders-sweden.org

Specifications

Item	Standard
Drive Belt	
Make	GATES, 139T
Belt Deflection (45 N, 4.6 kgf, 10 lb force)	3.0 ~ 4.5 mm (0.12 ~ 0.18 in.)
(When installing new belt or engine is remounted)	3.0 mm (0.12 in.)

Downloaded from www.vulcanriders-sweden.org

Special Tools

Inside Circlip Pliers:
57001-143

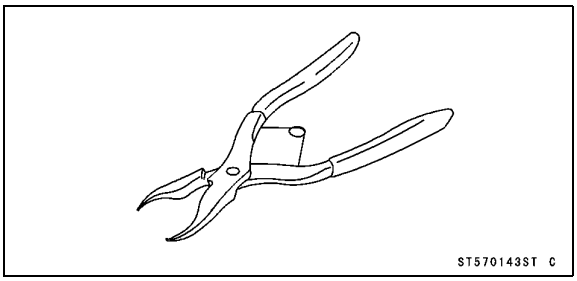

Pulley Holder:
57001-1572

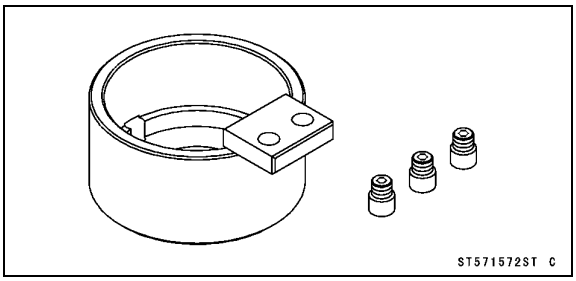

Oil Seal & Bearing Remover:
57001-1058

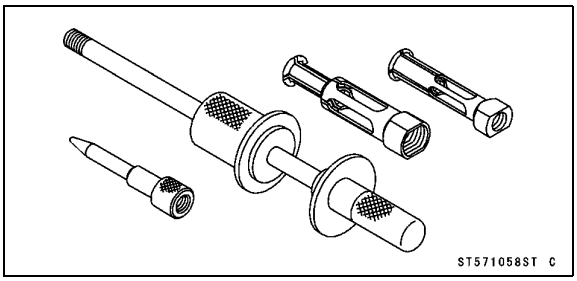

Grip:
57001-1591

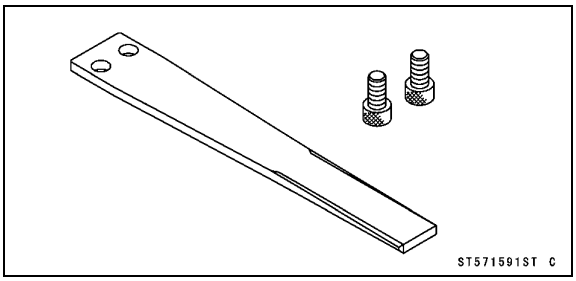

Bearing Driver Set:
57001-1129

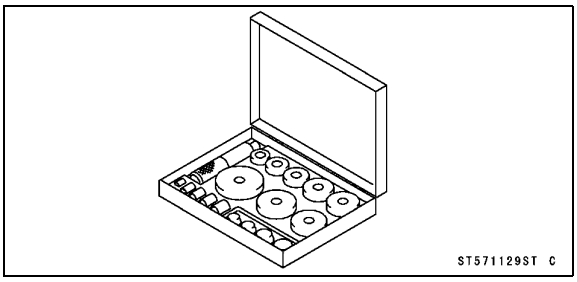

Downloaded from www.vulcanriders-sweden.org

Drive Belt

The drive belt must be checked, and adjusted in accordance with the Periodic Maintenance Chart for safety and to prevent excessive wear. If the belt becomes badly worn or maladjusted-either too loose or too tight-the belt could jump off the pulley or break.

Belt Handling Precautions

CAUTION
Do not adhere battery electrolyte, thinner or other solvents to the belt. Immediately wash away any solvent that spills on the belt.

- ○Drive belt is extremely durable and give long life in a properly designed drive. However, improper handling of the belt before or during installation can result in dramatically shortened service life.
- ○The belt's tensile cords are designed to carry large loads in tension but not compression.
- ○Compression causes damage to the tensile cords of the belt and can also lead to adhesion problems.
- ○Handling situations that can cause compression in tensile cord include aggressive bending and twisting.

- ● When assembly, handling and storage, the forward bending [A] radius of the drive belt [B] shall not be smaller than **63.5 mm (2.50 in.)** [C].

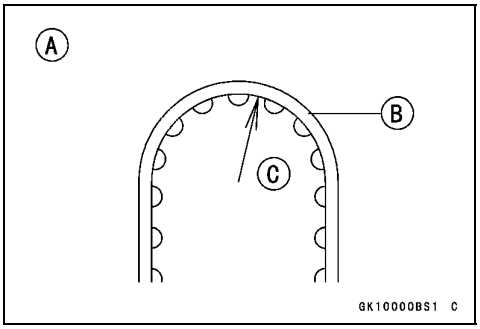

- ● When assembly, handling and storage, the back bending [A] radius of the drive belt [B] shall not be smaller than **127 mm (5.00 in.)** [C].

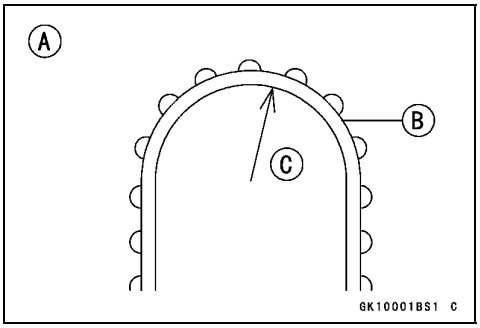

Downloaded from www.vulcanriders-sweden.org

Drive Belt

● Do not twist [A] the drive belt [B] as shown in the figure.
○This includes coiling the belt to make it smaller for packaging.

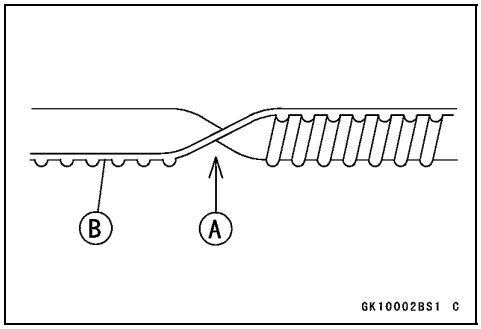

● Do not use tools [A] to pry [B] the drive belt [C] onto the application.
○Bring the rear pulley [D] front side so that the belt can be easily put on by hand.

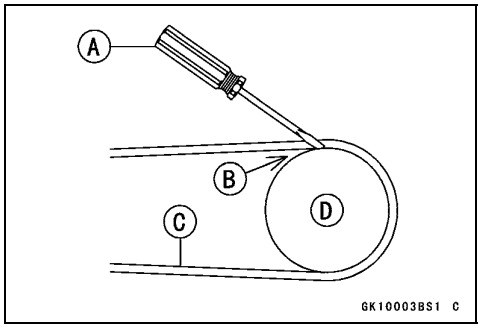

Drive Belt Wear Inspection

● Refer to the Belt Wear and Damage Inspection in the Periodic Maintenance chapter.

Drive Belt Deflection Inspection

● Refer to the Belt Deflection Inspection in the Periodic Maintenance chapter.

Drive Belt Deflection Adjustment

● Refer to the Belt Deflection Adjustment in the Periodic Maintenance chapter.

Drive Belt Removal

● Remove:
Rear Wheel (see Rear Wheel Removal in the Wheels/Tires chapter)
Engine Pulley (see Engine Pulley Removal)
Swingarm (see Swingarm Removal in the Suspension chapter)

NOTE

○*Before removing, observe the direction the belt's printed information [A] (such as manufacture's name) is facing so that it may be reinstalled on the pulleys to rotate in the same direction as originally installed.*

● Remove the drive belt [B].

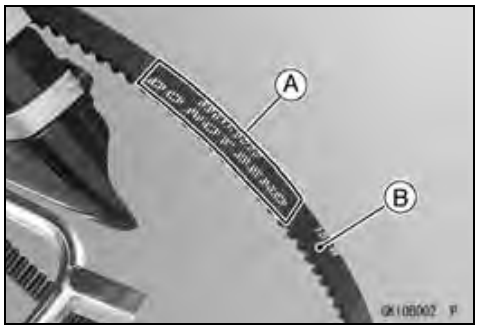

Downloaded from www.vulcanriders-sweden.org

Drive Belt

Drive Belt Installation

● Installation is the reverse of removal. Note the following.

NOTE

○*Be sure the printed information faces the same direction so the belt rotates in the same direction as originally instead. When installing a new belt, install it so the printed information can be read from left side of the motorcycle.*

● Adjust the drive belt deflection (see Belt Deflection Adjustment in the Periodic Maintenance chapter).

Downloaded from www.vulcanriders-sweden.org

Pulley and Coupling

Engine Pulley Outer Cover Removal

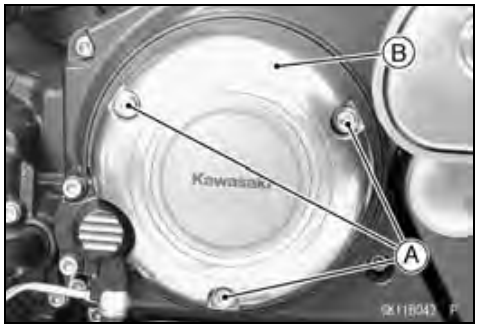

- Remove:
  Bolts [A]
  Engine Pulley Outer Cover [B]

Engine Pulley Outer Cover Installation

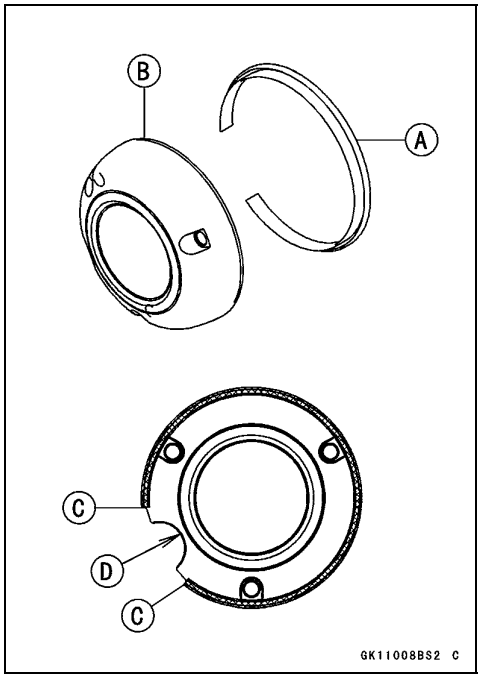

- Install the trim [A] on the engine pulley outer cover [B].
  ○The higher side of the trim faces inside.
  ○Align the trim ends [C] with the notch [D] of the cover.
- Tighten:

Torque - Engine Pulley Outer Cover Bolts: 9.8 N·m (1.0 kgf·m, 87 in·lb)

Engine Pulley Inner Cover Removal

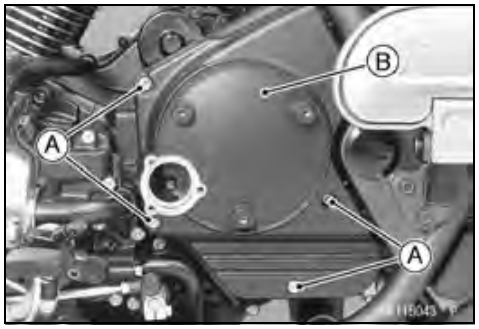

- Remove:
  Engine Pulley Outer Cover (see Engine Pulley Outer Cover Removal)
  Clutch Slave Cylinder (see Clutch Slave Cylinder Removal in the Clutch chapter)
- Remove the bolts [A], and take off the engine pulley inner cover [B].

Engine Pulley Inner Cover Installation

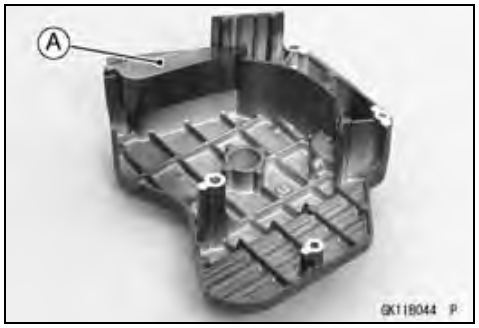

- Install the drive belt guide [A].

Downloaded from www.vulcanriders-sweden.org

Pulley and Coupling

● Check the installation condition of the pad [A].
○Stick the pad securely.
● Install the dowel pins [B] as shown in the figure.

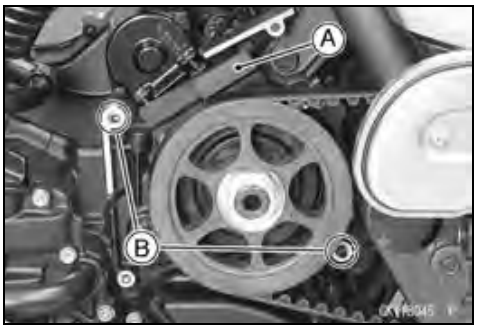

● Install the engine pulley inner cover [A].
● Tighten:

Torque - Engine Pulley Inner Cover Bolts [B] : 12 N·m (1.2 kgf·m, 106 in·lb)

● Install:
Clutch Slave Cylinder (see Clutch Slave Cylinder Installation in the Clutch chapter)
Engine Pulley Outer Cover (see Engine Pulley Outer Cover Installation)

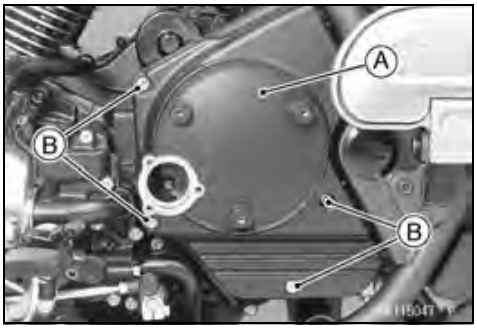

Engine Pulley Removal

● Remove:
Engine Pulley Outer Cover (see Engine Pulley Outer Cover Removal)
Clutch Slave Cylinder (see Clutch Slave Cylinder Removal in the Clutch chapter)
Engine Pulley Inner Cover (see Engine Pulley Inner Cover Removal)
● Deflect the belt fully (see Drive Belt Deflection Adjustment in the Periodic Maintenance chapter).
● Flatten out the bent washer [A].

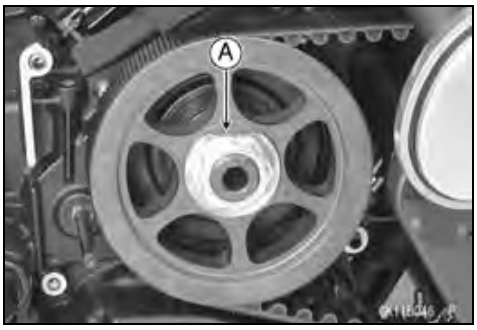

● Hold the engine pulley [A] steady with the pulley holder [B], and remove the pulley mounting nut [C].

Special Tools - Pulley Holder: 57001-1572
Grip: 57001-1591

● Pull out the engine pulley from the output shaft.

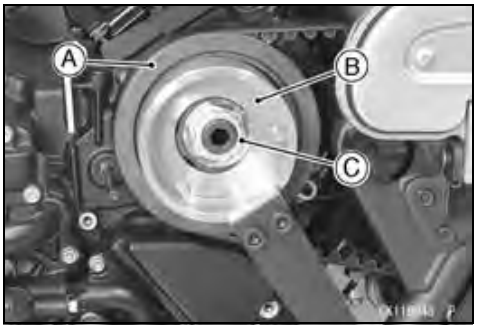

Downloaded from www.vulcanriders-sweden.org

Pulley and Coupling

Engine Pulley Installation

- Fit the grooves inside the pulley onto the splines on the output shaft.
- Replace the washer with a new one.
- Apply molybdenum disulfide grease to the threads of the output shaft and seating surface of the engine pulley mounting nut.

NOTE

○*If the grease stuck to the pulley or drive belt, wipe up it.*

- Hold the engine pulley steady with the pulley holder, and tighten the pulley mounting nut.

Torque - Engine Pulley Mounting Nut: 175 N·m (18.0 kgf·m, 129 ft·lb)

Special Tools - Pulley Holder: 57001-1572
Grip: 57001-1591

- Bend the one side of the washer [A] over the nut.
- Adjust the drive belt deflection (see Belt Deflection Adjustment in the Periodic Maintenance chapter).
- Install the removed parts (see appropriate chapters).

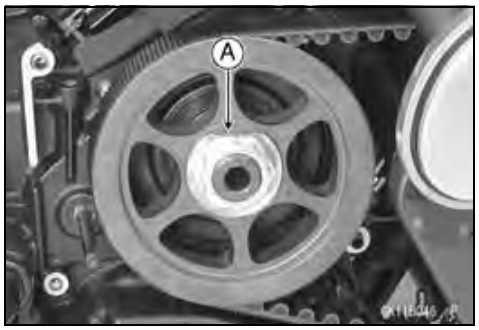

Rear Pulley Removal

- Remove:
  Rear Wheel (see Rear Wheel Removal in the Wheels/Tires chapter)
  Rear Pulley Mounting Nuts [A] and Washers
  Rear Pulley [B]

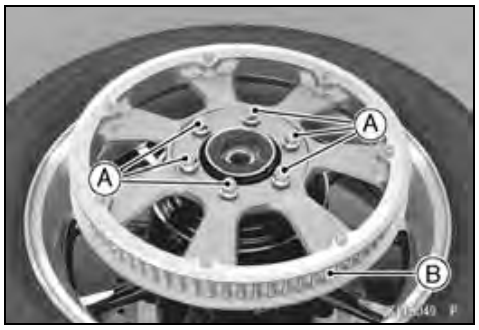

Rear Pulley Installation

- Install the rear pulley plate [A].

○Turn the bent edge to outside.

- Apply a non-permanent locking agent to the rear pulley plate bolts [B].
- Tighten:

Torque - Rear Pulley Plate Bolts: 6.9 N·m (0.70 kgf·m, 61 in·lb)

- Replace the rear pulley mounting nuts with new ones.
- Install the rear pulley, washers and rear pulley mounting nuts.
- Tighten:

Torque - Rear Pulley Mounting Nuts: 59 N·m (6.0 kgf·m, 44 ft·lb)

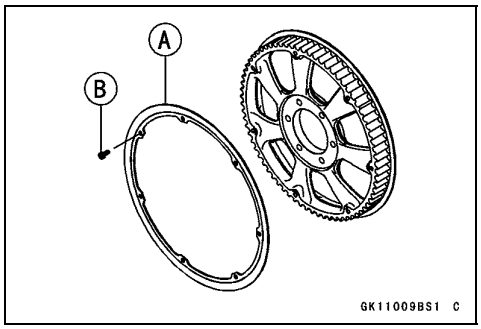

Downloaded from www.vulcanriders-sweden.org

Pulley and Coupling

Rear Pulley Coupling Installation

- Apply grease to the coupling grease seal lips [A].
- Apply grease to the rear pulley coupling internal surface [B].
- Install the sleeve [C].

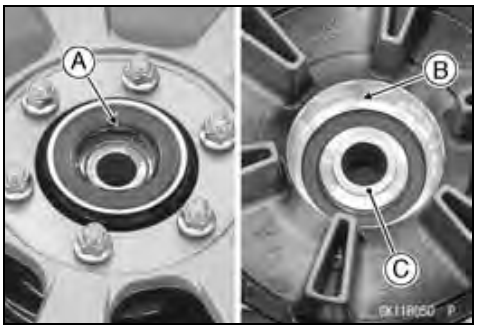

- Install the coupling dampers [A] so that the projections [B] face to the outside.
- Install the coupling on the dampers.

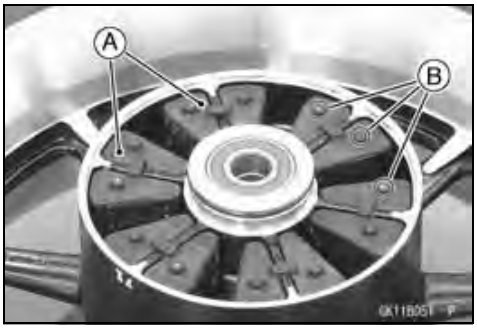

Pulley Wear Inspection

- Visually inspect the engine and rear pulley teeth for wear and damage.

★If the teeth are worn, damage, or loss of the chrome plating exists, replace the pulley, and inspect the drive belt wear (see Drive Belt Wear and Damage Inspection in the Periodic Maintenance chapter).

Engine Pulley [A]
Rear Pulley [B]



NOTE

○*If the pulley requires replacement, the belt is probably worn also. Whenever replacing the pulley, inspect the belt.*

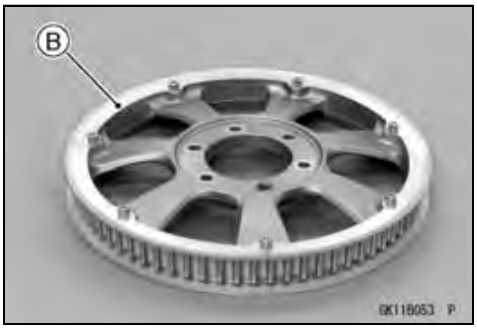

Coupling Bearing Removal

- Remove the rear wheel (see Rear Wheel Removal in the Wheels/Tires chapter).
- Take off the rear pulley coupling with the rear pulley from the wheel.
- Remove the grease seal [A].

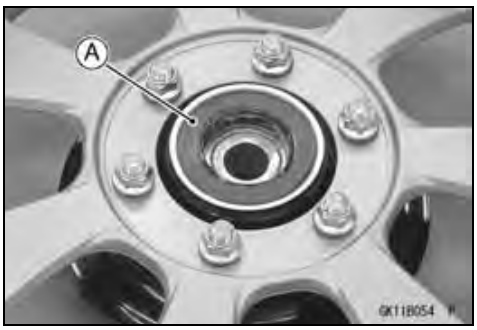

Downloaded from www.vulcanriders-sweden.org

Pulley and Coupling

● Remove the circlip [A].

Special Tool - Inside Circlip Pliers: 57001-143



● Remove the sleeve [A].
● Remove the ball bearing [B] by tapping from the wheel side.

Special Tool - Oil Seal & Bearing Remover: 57001-1058



Coupling Bearing Installation

● Replace the bearing with a new one.
● Press in the bearing [A] until it is bottomed.

Special Tool - Bearing Driver Set [B]: 57001-1129

● Replace the circlip with a new one.

Special Tool - Inside Circlip Pliers: 57001-143

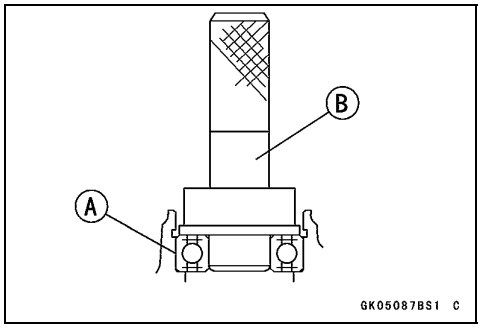

● Replace the grease seal with a new one.
● Press in the grease seal [A] so that the seal surface is flush [B] with the end of the hole.
○Apply grease to the grease seal lips.

Special Tool - Bearing Driver Set [C]: 57001-1129

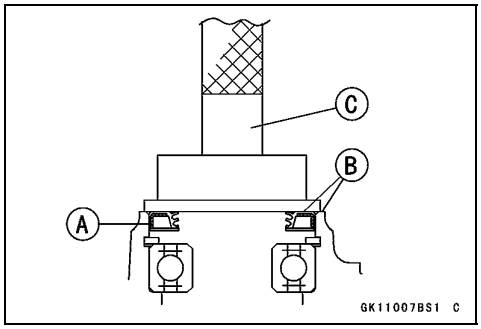

Coupling Bearing Inspection

Since the coupling bearing [A] is made to extremely close tolerances, the clearance can not normally be measured.

NOTE

○*It is not necessary to remove the coupling bearing for inspection. If the bearing is removed, it will need to be replaced with a new one.*



● Turn the bearing by hand to check its condition.
★If bearing play, roughness, or binding is found, replace the bearing.
● Examine the bearing seal for tears or leakage.
★If the seal is torn or is leaking, replace the bearing.

Downloaded from www.vulcanriders-sweden.org

Pulley and Coupling

Coupling Bearing Lubrication

NOTE

○*Since the coupling bearing is packed with grease and sealed, lubrication is not required.*

Rubber Damper Inspection

- Remove the rear wheel (see Rear Wheel Removal in the Wheels/Tires chapter).
- Take off the rear pulley with the coupling.
- Visually inspect the rubber dampers [A] for damage or deterioration.

★Replace the damper if it appears damaged or deteriorated.

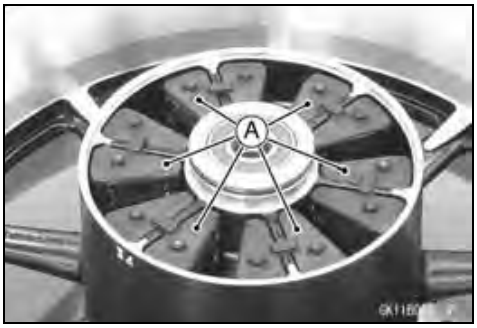

Downloaded from www.vulcanriders-sweden.org

Brakes

Table of Contents

Exploded View 12-2
Specifications 12-6
Special Tool 12-7
Brake Lever, Brake Pedal 12-8
  Brake Lever Position Adjustment 12-8
  Brake Pedal Position Inspection 12-8
  Brake Pedal Position Adjustment 12-8
  Brake Pedal Removal 12-8
  Brake Pedal Installation 12-9
Calipers 12-10
  Front Caliper Removal 12-10
  Rear Caliper Removal 12-10
  Caliper Installation 12-11
  Front Caliper Disassembly 12-11
  Front Caliper Assembly 12-11
  Rear Caliper Disassembly 12-11
  Rear Caliper Assembly 12-11
  Caliper Fluid Seal Damage Inspection 12-12
  Caliper Dust Seal Damage Inspection 12-12
  Caliper Dust Boot and Friction Boot Damage Inspection 12-13
  Caliper Piston and Cylinder Damage Inspection 12-13
  Caliper Holder Shaft Wear Inspection 12-14
Brake Pads 12-15
  Front Brake Pad Removal 12-15
  Front Brake Pad Installation 12-15
  Rear Brake Pad Removal 12-15
  Rear Brake Pad Installation 12-15
  Brake Pad Wear Inspection 12-15
Master Cylinder 12-16
  Front Master Cylinder Removal 12-16
  Front Master Cylinder Installation 12-16
  Rear Master Cylinder Removal 12-17
  Rear Master Cylinder Installation 12-17
  Front Master Cylinder Disassembly 12-17
  Rear Master Cylinder Disassembly 12-17
  Master Cylinder Assembly 12-18
  Master Cylinder Inspection (Visual Inspection) 12-18
Brake Discs 12-19
  Brake Disc Removal 12-19
  Brake Disc Installation 12-19
  Brake Disc Wear Inspection 12-19
  Brake Disc Warp Inspection 12-19
Brake Fluid 12-20
  Brake Fluid Level Inspection 12-20
  Brake Fluid Change 12-20
  Brake Line Bleeding 12-20
Brake Hose 12-23
  Brake Hose and Pipe Removal/Installation 12-23
  Brake Hose and Pipe Inspection 12-23

Downloaded from www.vulcanriders-sweden.org

Exploded View

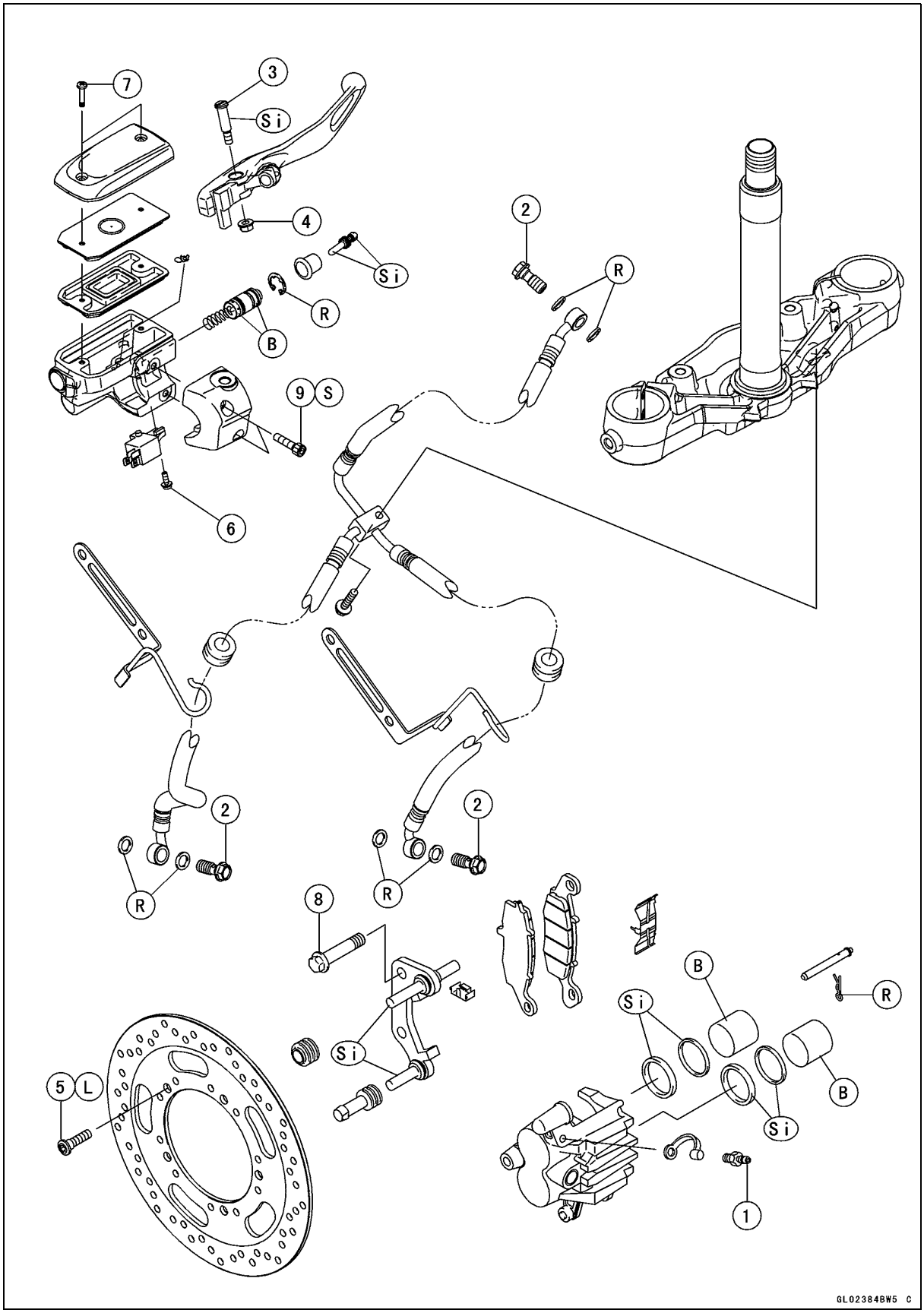

Downloaded from www.vulcanriders-sweden.org

Exploded View

No.	Fastener	Torque			Remarks
		N·m	kgf·m	ft·lb	
1	Bleed Valves	7.8	0.80	69 in·lb	
2	Brake Hose Banjo Bolts	25	2.5	18	
3	Brake Lever Pivot Bolt	1.0	0.10	8.9 in·lb	Si
4	Brake Lever Pivot Bolt Locknut	5.9	0.60	52 in·lb	
5	Front Brake Disc Mounting Bolts	27	2.8	20	L
6	Front Brake Light Switch Screw	1.2	0.12	11 in·lb	
7	Front Brake Reservoir Cap Screws	1.5	0.15	13 in·lb	
8	Front Caliper Mounting Bolts	34	3.5	25	
9	Front Master Cylinder Clamp Bolts	11	1.1	97 in·lb	S

B: Apply brake fluid.
L: Apply a non-permanent locking agent.
R: Replacement Parts
S: Follow the specified tightening sequence.
Si: Apply silicone grease (ex. PBC grease).

Downloaded from www.vulcanriders-sweden.org

Exploded View

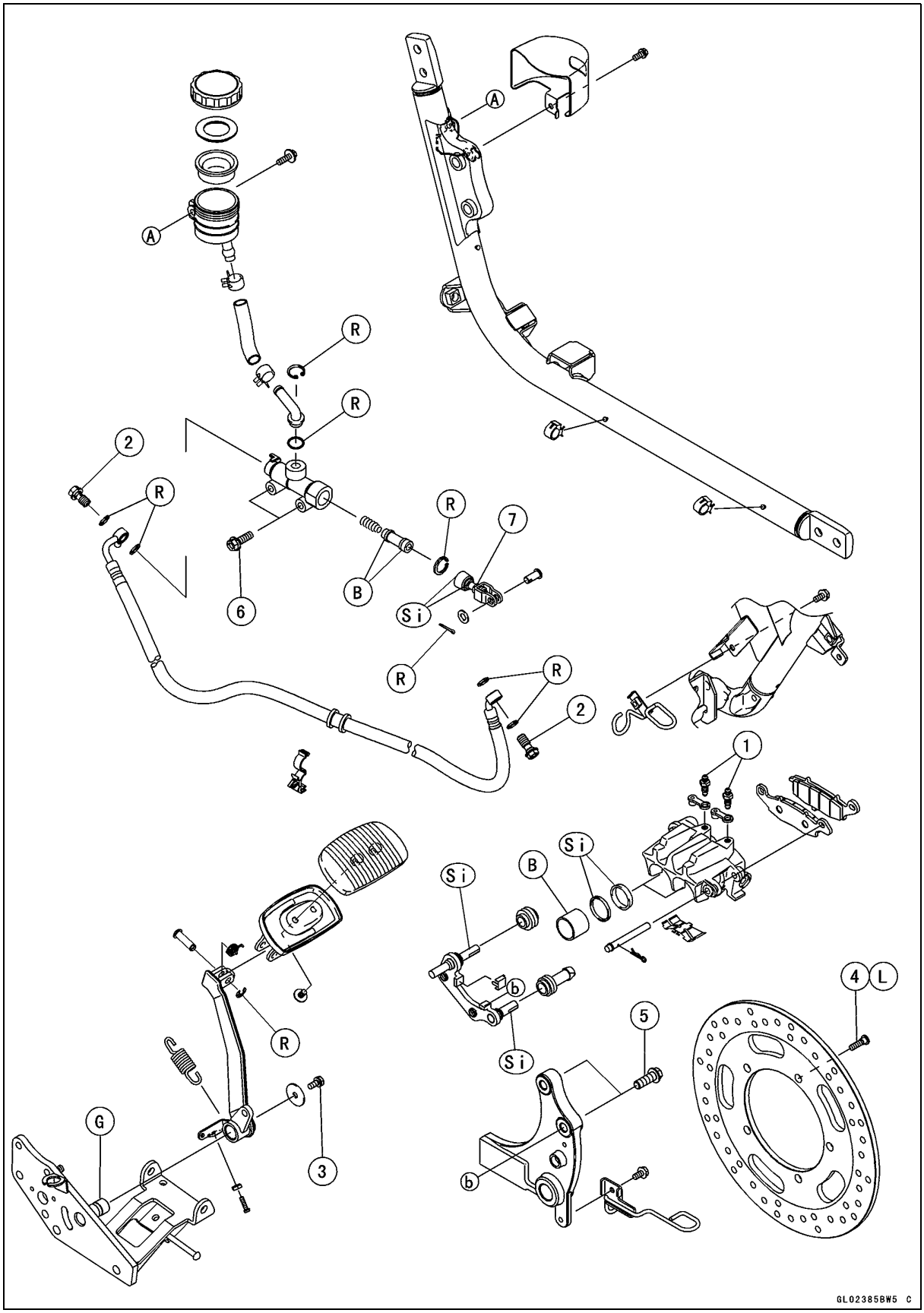

Downloaded from www.vulcanriders-sweden.org

Exploded View

No.	Fastener	Torque			Remarks
		N·m	kgf·m	ft·lb	
1	Bleed Valves	7.8	0.80	69 in·lb	
2	Brake Hose Banjo Bolts	25	2.5	18	
3	Brake Pedal Bolt	8.8	0.90	78 in·lb	
4	Rear Brake Disc Mounting Bolts	27	2.8	20	L
5	Rear Caliper Mounting Bolts	34	3.5	25	
6	Rear Master Cylinder Mounting Bolts	25	2.5	18	
7	Rear Master Cylinder Push Rod Locknut	17.2	1.8	13	

B: Apply brake fluid.
G: Apply grease.
L: Apply a non-permanent locking agent.
R: Replacement Parts
Si: Apply silicone grease (ex. PBC grease).

Downloaded from www.vulcanriders-sweden.org

Specifications

Item	Standard	Service Limit
Brake Lever, Brake Pedal		
Brake Lever Position	8-way adjustable (to suit rider)	– – –
Brake Lever Free Play	Non-adjustable	– – –
Pedal Free Play	Non-adjustable	– – –
Pedal Position	About 100 mm (3.94 in.) (height from pedal top to footboard top)	– – –
Brake Pads		
Lining Thickness:		
Front	4.5 mm (0.18 in.)	1 mm (0.04 in.)
Rear	7.0 mm (0.28 in.)	1 mm (0.04 in.)
Brake Discs		
Thickness:		
Front	4.8 ~ 5.2 mm (0.19 ~ 0.20 in.)	4.5 mm (0.18 in.)
Rear	6.8 ~ 7.2 mm (0.27 ~ 0.28 in.)	6.0 mm (0.24 in.)
Runout	TIR 0.15 mm (0.006 in.) or less	TIR 0.3 mm (0.01 in.)
Brake Fluid		
Grade	DOT4	– – –

Downloaded from www.vulcanriders-sweden.org

Special Tool

Jack:
57001-1238

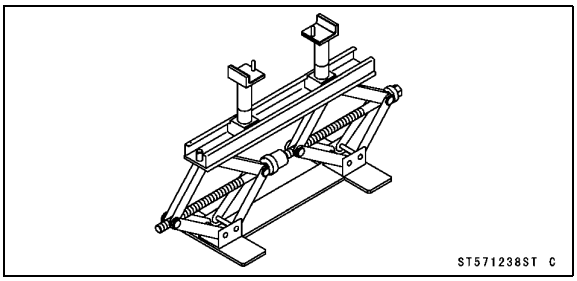

Downloaded from www.vulcanriders-sweden.org

Brake Lever, Brake Pedal

Brake Lever Position Adjustment



● Push the lever forward and turn the adjuster [A].

Brake Pedal Position Inspection

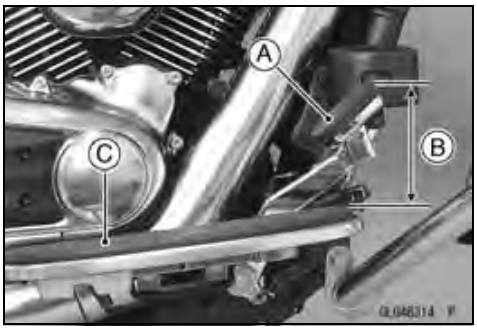

● Check that the brake pedal [A] is in the correct position.

Pedal Position

Standard: About 100 mm (3.94 in.) [B] (height from pedal top to footboard top [C])

★If it is incorrect, adjust the brake pedal position.

Brake Pedal Position Adjustment

NOTE

○*Usually it is not necessary to adjust the pedal position, but always adjust it when push rod locknut has been loosened.*

○*If the push rod length cannot be adjusted by turning the clevis, the brake pedal may be deformed or incorrectly installed.*

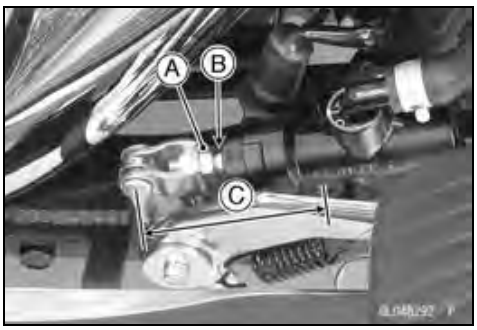

● Loosen the locknut [A] and turn the push rod with the hex head [B] to achieve the correct pedal position.

★If the length [C] shown is **70 ±1 mm (2.76 ±0.04 in.)**, the pedal position will be within the standard range.

● Tighten:

Torque - Rear Master Cylinder Push Rod Locknut: 17.2 N·m (1.8 kgf·m, 13 ft·lb)

● Check the brake light switch operation (see Brake Light Switch Operation Inspection in the Periodic Maintenance chapter).

Brake Pedal Removal

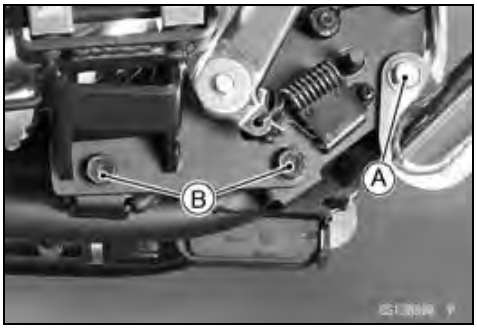

● Remove:
  Front Guard Mounting Bolt [A]
  Front Footboard Bracket Bolts [B]

● Slide the front guard forward.

Downloaded from www.vulcanriders-sweden.org

Brake Lever, Brake Pedal

● Remove:
Brake Pedal Return Spring [A]
Rear Brake Light Switch Spring [B]
Bolt [C]
Washer [D]
Cotter Pin [E]
Washer [F]
Joint Pin [G]
Brake Pedal [H]

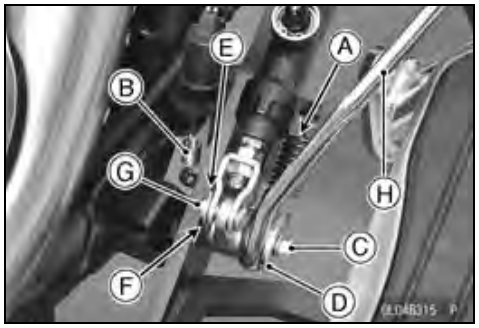

Brake Pedal Installation

● Apply grease to the pivot shaft [A].
● Install:
Brake Pedal [B]
Joint Pin
Washer
Cotter Pin
Washer [C]
● Tighten:

Torque - Brake Pedal Bolt [D]: 8.8 N·m (0.90 kgf·m, 78 in·lb)

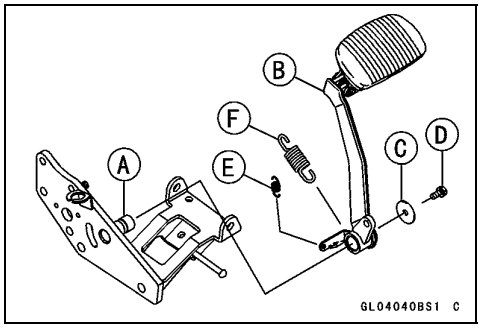

● Hook the rear brake light switch spring [E] and brake pedal return spring [F].
● Install the front footboard right (see Front Footboard Removal/Installation in the Frame chapter).
● Check the brake pedal position (see Brake Pedal Position Inspection).

● Check the screw [A] position as shown in the figure.

5 mm (0.20 in.) [B]

★If it is incorrect, loosen the locknut [C] and adjust the screw.

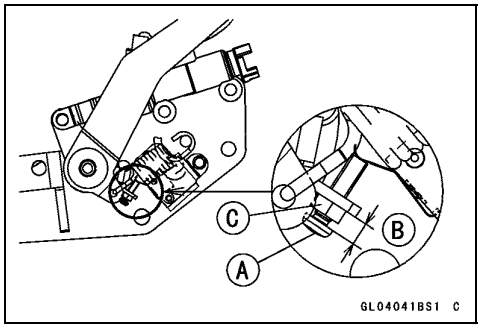

Downloaded from www.vulcanriders-sweden.org

Calipers

Front Caliper Removal

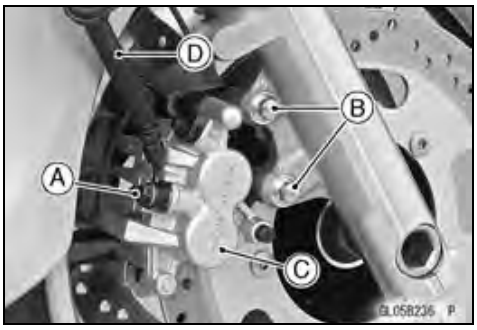

- Loosen the banjo bolt [A] at the brake hose lower end, and tighten it loosely.
- Unscrew the caliper mounting bolts [B], and detach the caliper [C] from the disc.
- Unscrew the banjo bolt and remove the brake hose [D] from the caliper (see Brake Hose and Pipe Replacement in the Periodic Maintenance chapter).

CAUTION

Immediately wash away any brake fluid that spills.

NOTE

○*If the caliper is to be disassembled after removal and if compressed air is not available, disassemble the caliper before the brake hose is removed (see Caliper Rubber Parts Replacement in the Periodic Maintenance chapter).*

Rear Caliper Removal

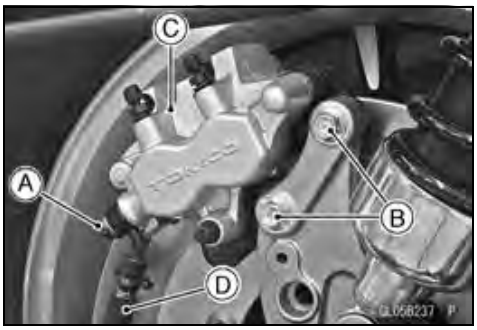

- Remove the right saddlebag (see Saddlebag Removal in the Frame chapter).
- Loosen the banjo bolt [A] at the brake hose lower end, and tighten it loosely.
- Unscrew the caliper mounting bolts [B], and detach the caliper [C] from the disc.
- Unscrew the banjo bolt and remove the brake hose [D] from the caliper (see Brake Hose and Pipe Replacement in the Periodic Maintenance chapter).

CAUTION

Immediately wash away any brake fluid that spills.

NOTE

○*If the caliper is to be disassembled after removal and if compressed air is not available, disassemble the caliper before the brake hose is removed (see Caliper Rubber Parts Replacement in the Periodic Maintenance chapter).*

Downloaded from www.vulcanriders-sweden.org

Calipers

Caliper Installation

● Install the caliper and brake hose lower end.
○Replace the washer on each side of hose fitting with new ones.
● Tighten:

Torque - Caliper Mounting Bolts: 34 N·m (3.5 kgf·m, 25 ft·lb)
Brake Hose Banjo Bolts: 25 N·m (2.5 kgf·m, 18 ft·lb)

● Check the fluid level in the brake reservoirs (see Brake Fluid Level Inspection in the Periodic Maintenance chapter).
● Bleed the brake line (see Brake Line Bleeding).
● Check the brake for good braking power, no brake drag, and no fluid leakage.

⚠ WARNING

Do not attempt to drive the motorcycle until a full brake lever or pedal is obtained by pumping the brake lever or pedal until the pads are against the disc. The brakes will not function on the first application of the lever or pedal if this is not done.

Front Caliper Disassembly

● Refer to the Caliper Rubber Parts Replacement in the Periodic Maintenance chapter.

Front Caliper Assembly

● Refer to the Caliper Rubber Parts Replacement in the Periodic Maintenance chapter.

Rear Caliper Disassembly

● Refer to the Caliper Rubber Parts Replacement in the Periodic Maintenance chapter.

Rear Caliper Assembly

● Refer to the Caliper Rubber Parts Replacement in the Periodic Maintenance chapter.

Downloaded from www.vulcanriders-sweden.org

Calipers

Caliper Fluid Seal Damage Inspection

The fluid seal (piston seal) [A] is placed around the piston to maintain clearance between the pad and the disc. If the seal is in a poor condition, it could lead the pad to wear excessively or the brake to drag, which may cause the temperature of the discs or the brake fluid to increase.

- Replace the fluid seal if it exhibits any of the conditions listed below.

○Brake fluid leakage around the pad.
○Brakes overheat.
○Considerable difference in inner and outer pad wear.
○Seal and piston are stuck together.

★If the fluid seal is replaced, replace the dust seal [B] as well. Also, replace all seals every other time the pads are changed.

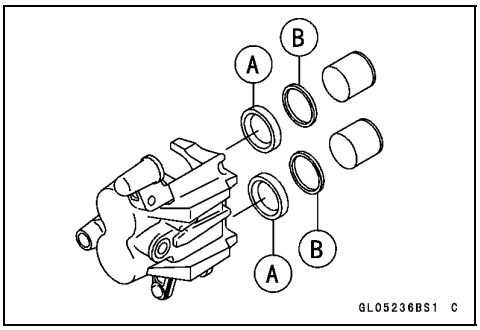

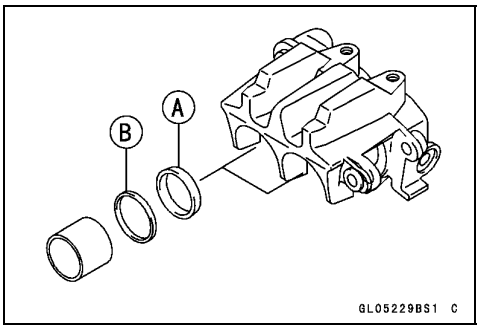

Caliper Dust Seal Damage Inspection

- Check that the dust seals [A] are not cracked, worn, swollen, or otherwise damaged.

★If they show any damage, replace the dust seals with new ones.

Pistons [B]
Fluid Seals [C]

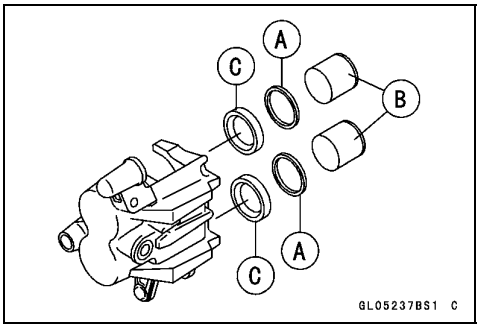

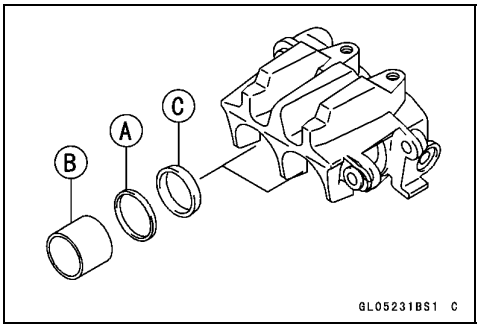

Downloaded from www.vulcanriders-sweden.org

Calipers

Caliper Dust Boot and Friction Boot Damage Inspection

- Check that the dust boot [A] and friction boot [B] are not cracked, worn, swollen, or otherwise damaged.

★If they show any damage, replace it.

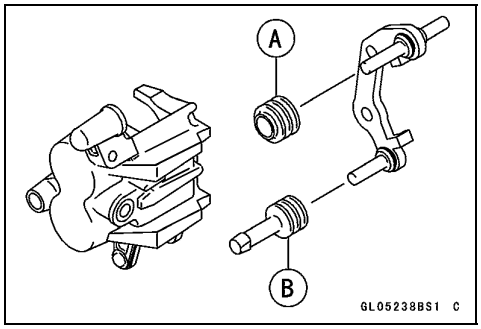

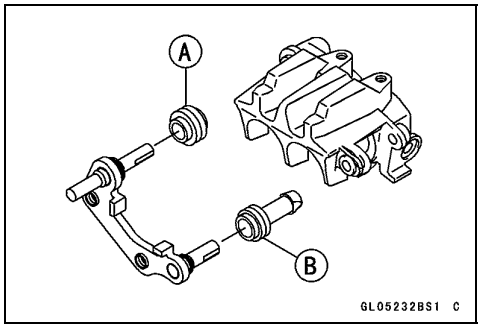

Caliper Piston and Cylinder Damage Inspection

- Visually inspect the pistons [A] and cylinder surfaces [B].

★Replace the caliper if the cylinder and piston are badly scores or rusty.

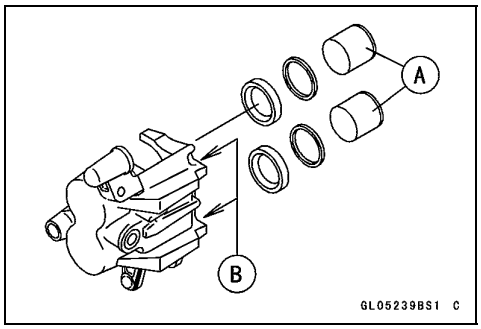

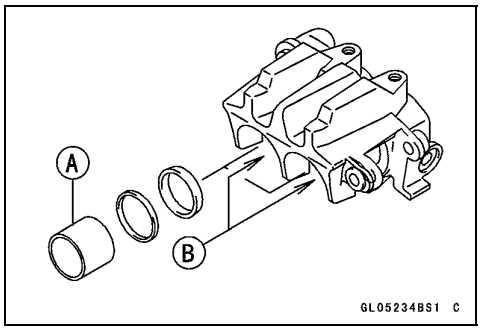

Downloaded from www.vulcanriders-sweden.org

Calipers

Caliper Holder Shaft Wear Inspection

The caliper body must slide smoothly on the caliper holder shafts [A]. If the body does not slide smoothly, one pad will wear more than the other, pad wear will increase, and constant drag on the disc will raise brake and brake fluid temperature.

- Check to see that the caliper holder shafts are not badly worn or stepped, and that the friction boot [B] is not damaged.

★If the friction boot is damaged, replace the friction boot. To replace the friction boot, remove the pads and the caliper holder.

★If the caliper holder shafts are damaged, replace the caliper holder.

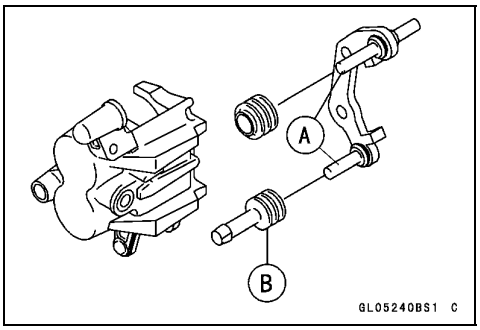

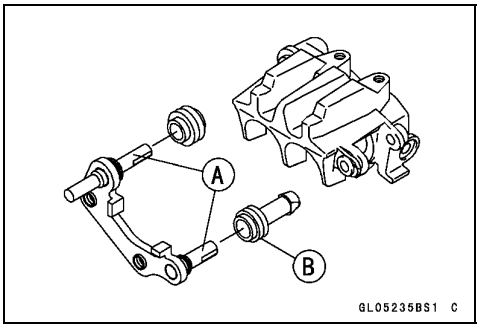

Downloaded from www.vulcanriders-sweden.org

Brake Pads

Front Brake Pad Removal

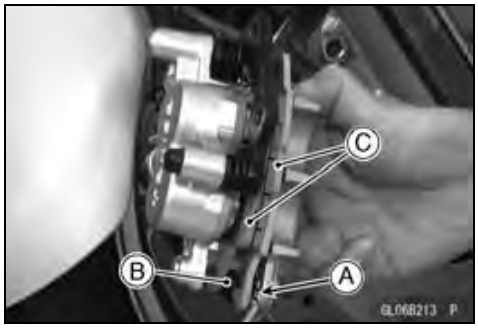

- Remove the front caliper with the hose installed (see Front Caliper Removal).
- Remove:
  Snap Pin [A]
  Pad Pin [B]
  Brake Pads [C]

Front Brake Pad Installation

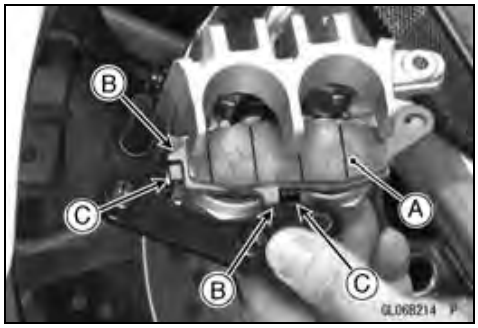

- Push the caliper piston in by hand as far as it will go.
- Install the pad spring in place.
- Install the piston side pad [A] first, and then another pad.
  ○Fit the projections [B] of the pad into the recess [C] of the caliper holder.
- Install the pad pin and snap pin.
- Install the caliper (see Caliper Installation).

⚠ WARNING

Do not attempt to drive the motorcycle until a full brake lever is obtained by pumping the brake lever until the pads are against the disc. The brake will not function on the first application of the lever if this is not done.

Rear Brake Pad Removal



- Remove the rear caliper with the hose installed (see Rear Caliper Removal).
- Remove:
  Snap Pin [A]
  Pad Pin [B]
  Brake Pads [C]

Rear Brake Pad Installation

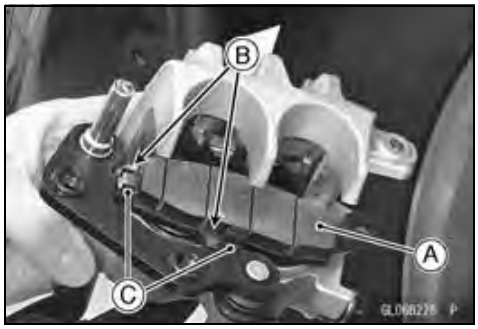

- Push the caliper piston in by hand as far as it will go.
- Install the pad spring in place.
- Install the piston side pad [A] first, and then another pad.
  ○Fit the projections [B] of the pad into the recess [C] of the caliper holder.
- Install the pad pin and snap pin.
- Install the caliper (see Caliper Installation).

⚠ WARNING

Do not attempt to drive the motorcycle until a full brake pedal is obtained by pumping the brake pedal until the pads are against the disc. The brake will not function on the first application of the pedal if this is not done.

Brake Pad Wear Inspection

- Refer to the Brake Pad Wear Inspection in the Periodic Maintenance chapter.

Downloaded from www.vulcanriders-sweden.org

Master Cylinder

Front Master Cylinder Removal

- Remove the banjo bolt [A] to disconnect the brake hose from the master cylinder (see Brake Hose Replacement in the Periodic Maintenance chapter).



- Disconnect the front brake light switch connectors [A] and the cruise control cancel switch connectors [B].
- Unscrew the clamp bolts [C], and take off the master cylinder as an assembly with the reservoir, brake lever, and brake switch installed.

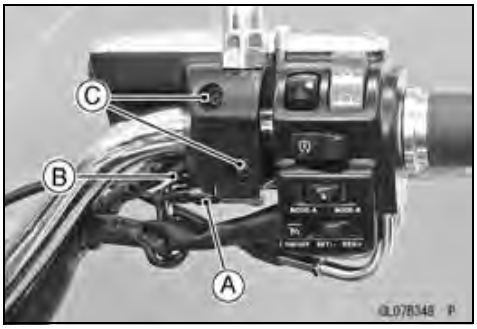

CAUTION
Immediately wash away any brake fluid that spills.

Front Master Cylinder Installation

- Set the front master cylinder [A] to match its mating surface [B] to the punch mark [C] of the handlebar.

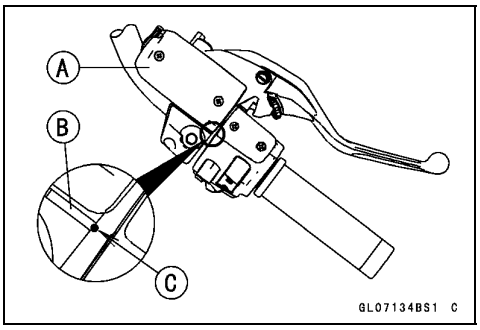

- Tighten the upper clamp bolt [A] first, and then the lower clamp bolt [B].

  Torque - Front Master Cylinder Clamp Bolts: 11 N·m (1.1 kgf·m, 97 in·lb)

- Replace the washers that are on each side of the hose fitting with new ones.
- Tighten:

  Torque - Brake Hose Banjo Bolts: 25 N·m (2.5 kgf·m, 18 ft·lb)

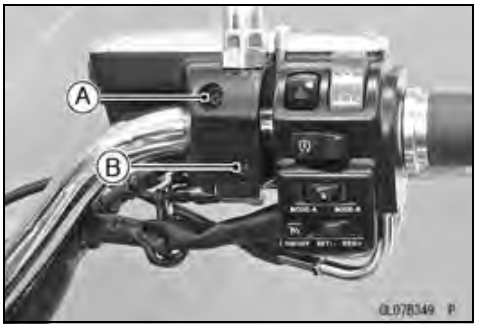

- Replenish the fluid in the reservoir, and bleed the brake line (see Brake Line Bleeding).
- Check the brake for good braking power, no brake drag, and no fluid leakage.

Downloaded from www.vulcanriders-sweden.org

Master Cylinder

Rear Master Cylinder Removal



- Remove:
  Bolt [A]
  Cover [B]
  Bolt [C]

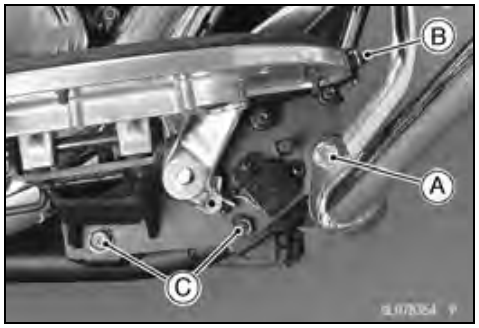

- Unscrew:
  Front Guard Mounting Bolt [A]
  Brake Hose Banjo Bolt [B]
  Front Footboard Bracket Bolts [C]
- Slide the front guard forward.

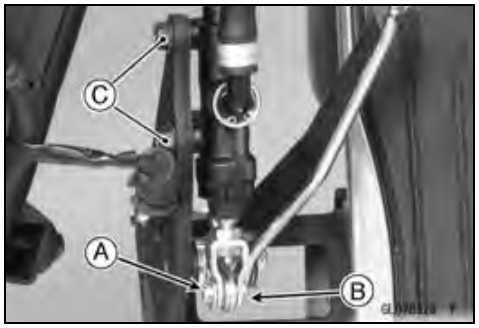

- Remove:
  Cotter Pin [A]
  Joint Pin [B]
  Rear Master Cylinder Mounting Bolts [C]

Rear Master Cylinder Installation

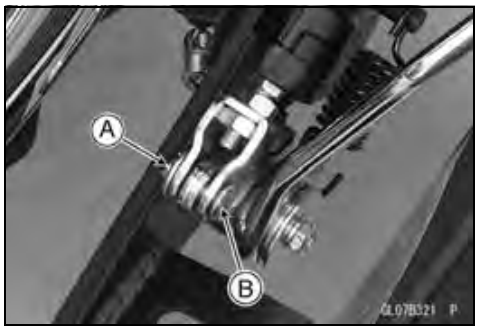

- Replace the cotter pin with a new one.
- Insert the cotter pin [A] to the hole of the joint pin [B] and separate the cotter pin ends.
- Replace the washers that are on each side of the hose fitting with new ones.
- Tighten:

Torque - Rear Master Cylinder Mounting Bolts: 25 N·m (2.5 kgf·m, 18 ft·lb)
Brake Hose Banjo Bolts: 25 N·m (2.5 kgf·m, 18 ft·lb)

- Install the front footboard (see Front Footboard Removal/Installation in the Frame chapter).
- Replenish the fluid in the reservoir, and bleed the brake line (see Brake Line Bleeding).
- Check the brake for good braking power, no brake drag, and no fluid leakage.

Front Master Cylinder Disassembly

- Refer to the Master Cylinder Rubber Parts Replacement in the Periodic Maintenance chapter.

Rear Master Cylinder Disassembly

- Refer to the Master Cylinder Rubber Parts Replacement in the Periodic Maintenance chapter.

Downloaded from www.vulcanriders-sweden.org

Master Cylinder

Master Cylinder Assembly

- Refer to the Master Cylinder Rubber Parts Replacement in the Periodic Maintenance chapter.

Master Cylinder Inspection (Visual Inspection)

- Remove the master cylinders (see Front/Rear Master Cylinder Removal).
- Disassemble the front and rear master cylinders (see Master Cylinder Rubber Parts Replacement in the Periodic Maintenance chapter).

CAUTION

Do not remove the secondary cup from the piston since removal will damage it.

- Check that there are no scratches, rust or pitting on the inner wall [A] of each master cylinder and on the outside of each piston [B].

★If a master cylinder or piston shows any damage, replace them.

- Inspect the primary cup [C] and secondary cup [D].

★If a cup is worn, damaged softened (rotted), or swollen, the piston assembly should be replaced to renew the cups.

★If fluid leakage is noted at the brake lever, the piston assembly should be replaced to renew the cups.

- Check the dust covers [E] for damage.

★If they are damaged, replace them.

- Check the piston return springs [F] for any damage.

★If the springs are damaged, replace them.

- Check that relief port [G] and supply port [H] are not plugged.

★If the relief port becomes plugged, the brake pads will drag on the disc. Blow the ports clean with compressed air.

Front Master Cylinder [J]
Rear Master Cylinder [K]

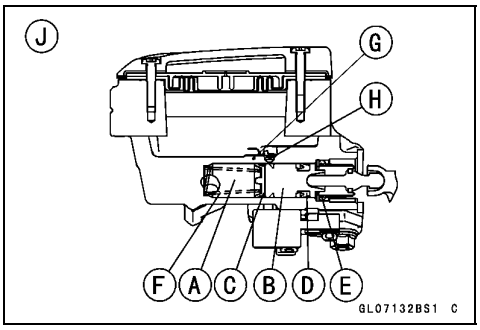

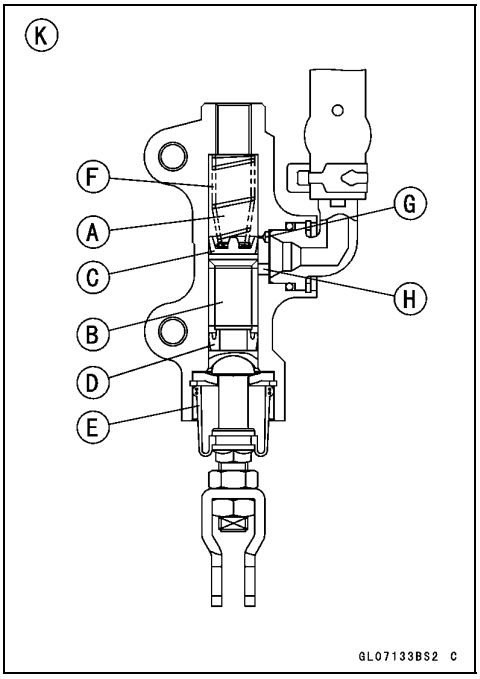

Downloaded from www.vulcanriders-sweden.org

Brake Discs

Brake Disc Removal



- Remove the wheels (see Front/Rear Wheel Removal in the Wheels/Tires chapter).
- Unscrew the mounting bolts [A], and take off the disc.

Brake Disc Installation

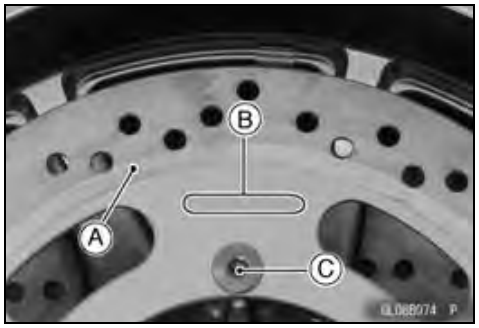

- Install the brake disc [A] on the wheel so that the marked side [B] faces out.
- Apply a non-permanent locking agent to the threads of the front and rear brake disc mounting bolts [C].
- Tighten:

Torque - Brake Disc Mounting Bolts: 27 N·m (2.8 kgf·m, 20 ft·lb)

Brake Disc Wear Inspection

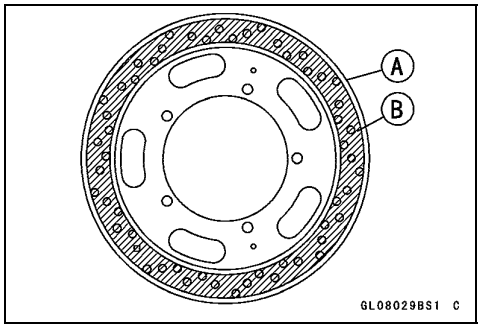

- Measure the thickness of each disc [A] at the point where it has worn the most.

★If the disc has worn past the service limit, replace it.

Measuring Area [B]

Brake Discs Thickness

Standard:

Front	**4.8 ~ 5.2 mm (0.19 ~ 0.20 in.)**
Rear	**6.8 ~ 7.2 mm (0.27 ~ 0.28 in.)**

Service Limit:

Front	**4.5 mm (0.18 in.)**
Rear	**6.0 mm (0.24 in.)**

Brake Disc Warp Inspection

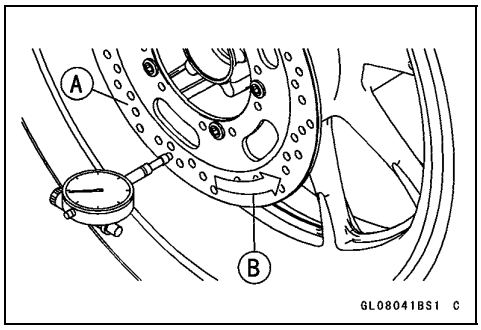

- Raise the front/rear wheel off the ground.

Special Tool - Jack: 57001-1238

○For front disc inspection, turn the handlebar fully to one side.

- Set up a dial gauge against the disc [A] as shown in the figure and measure disc runout, while turning [B] the wheel by hand.

★If the runout exceeds the service limit, replace the disc.

Disc Runout

Standard:	**TIR 0.15 mm (0.006 in.) or less**
Service Limit:	**TIR 0.3 mm (0.01 in.)**

Downloaded from www.vulcanriders-sweden.org

Brake Fluid

Brake Fluid Level Inspection

● Refer to the Brake Fluid Level Inspection in the Periodic Maintenance chapter.

Brake Fluid Change

● Refer to the Brake Fluid Change in the Periodic Maintenance chapter.

Brake Line Bleeding

The brake fluid has a very low compression coefficient so that almost all the movement of the brake lever or pedal is transmitted directly to the caliper for braking action. Air, however, is easily compressed. When air enters the brake lines, brake lever or pedal movement will be partially used in compressing the air. This will make the lever or pedal feel spongy, and there will be a loss in braking power.

⚠ WARNING

Be sure to bleed the air from the brake line whenever brake lever or pedal action feels soft or spongy after the brake fluid is changed, or whenever a brake line fitting has been loosened for any reason.

NOTE

○*The procedure to bleed the front brake line is as follows. Bleeding the rear brake line is the same as for the front brake.*

● Remove:
Screws [A]
Reservoir Cap [B]
Diaphragm Plate [C]
Diaphragm [D]
Protector [E]

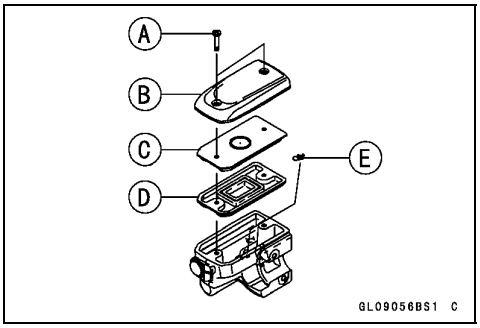

● Fill the reservoir with fresh brake fluid to the upper level line in the reservoir.
● Slowly pump the brake lever several times until no air bubbles can be seen rising up through the fluid from the holes [A] at the bottom of the reservoir.



Downloaded from www.vulcanriders-sweden.org

Brake Fluid

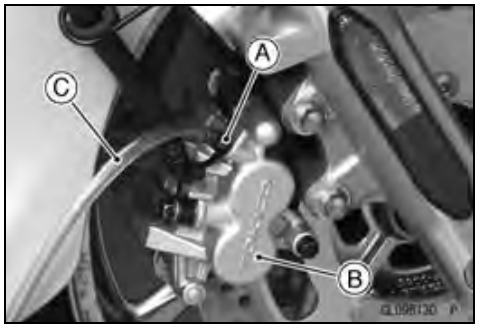

- Remove the rubber cap from the bleed valve [A] on the caliper [B].
- Attach a clear plastic hose [C] to the bleed valve, and run the other end of the hose into a container.

- Bleed the brake line and the caliper.

○Repeat this operation until no more air can be seen coming out into the plastic hose.

1. Pump the brake lever until it becomes hard, and apply the brake lever and hold it [A].
2. Quickly open and close [B] the bleed valve while holding the brake lever applied.
3. Release the brake lever [C].

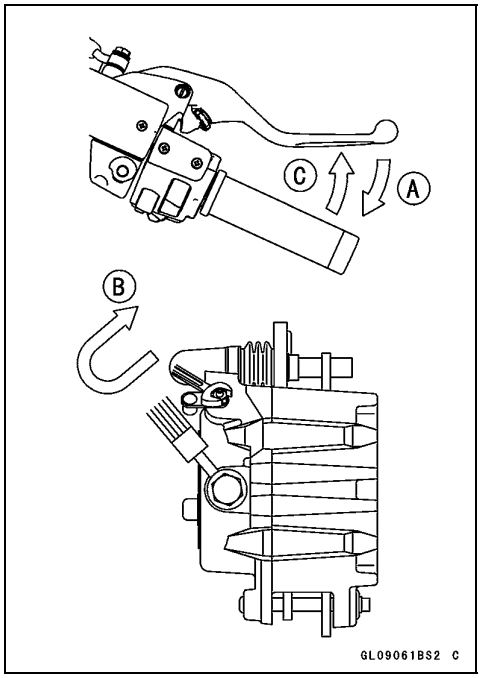

NOTE

○*The fluid level must be checked often during the bleeding operation and replenished with fresh brake fluid as necessary. If the fluid in the reservoir runs completely out any time during bleeding, the bleeding operation must be done over again from the beginning since air will have entered the line.*

○*Tap the brake hose lightly from the caliper to the reservoir for more complete bleeding.*

○*Front Brake: Repeat the above steps for the other caliper.*

- Remove the clear plastic hose.
- Install:
  Protector
  Diaphragm
  Diaphragm Plate
  Reservoir Cap
- Tighten:

Torque - Front Brake Reservoir Cap Screws: 1.5 N·m (0.15 kgf·m, 13 in·lb)

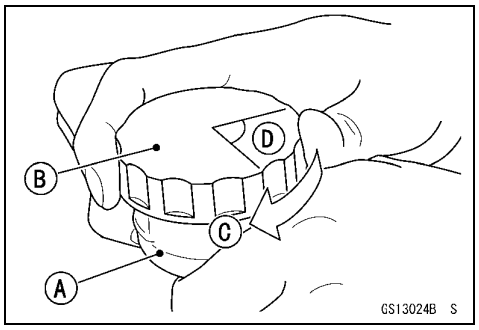

- Follow the procedure below to install the rear brake fluid reservoir cap correctly.

○First, tighten the rear brake fluid reservoir cap [B] clockwise [C] by hand until slight resistance is felt indicating that the cap is seated on the reservoir body, then tighten the cap an additional 1/6 turn [D] while holding the brake fluid reservoir body [A].

Downloaded from www.vulcanriders-sweden.org

Brake Fluid

NOTE

○*For the rear brake caliper [A], bleed the brake line for two bleed valves [B].*

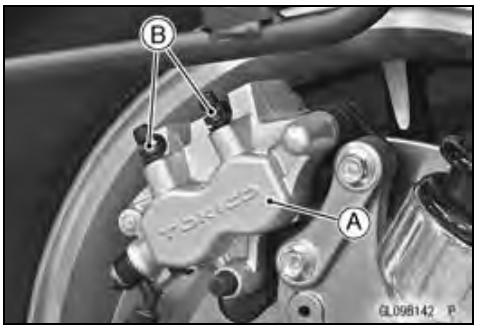

- Tighten the bleed valve, and install the rubber cap.

  Torque - Bleed Valves: 7.8 N·m (0.80 kgf·m, 69 in·lb)

- Check the fluid level (see Brake Fluid Level Inspection in the Periodic Maintenance chapter).
- After bleeding is done, check the brake for good braking power, no brake drag, and no fluid leakage.

⚠ WARNING

When working with the disc brake, observe the precautions listed below.

1. Never reuse old brake fluid.
2. Do not use fluid from a container that has been left unsealed or that has been open for a long time.
3. Do not mix two types and brands of fluid for use in the brake. This lowers the brake fluid boiling point and could cause the brake to be ineffective. It may also cause the rubber brake parts to deteriorate.
4. Don't leave the reservoir cap off for any length of time to avoid moisture contamination of the fluid.
5. Don't change the fluid in the rain or when a strong wind is blowing.
6. Except for the disc pads and disc, use only disc brake fluid, isopropyl alcohol, or ethyl alcohol for cleaning of the brake parts. Do not use any other fluid for cleaning these parts. Gasoline, engine oil, or any other petroleum distillate will cause deterioration of the rubber parts. Oil spilled on any part will be difficult to wash off completely and will eventually deteriorate the rubber used in the disc brake.
7. When handling the disc pads or disc, be careful that no disc brake fluid or any oil gets on them. Clean off any fluid or oil that inadvertently gets on the pads or disc with a high-flash point solvent. Do not use one which will leave an oily residue. Replace the pads with new ones if they cannot be cleaned satisfactorily.
8. Brake fluid quickly ruins painted surfaces; any spilled fluid should be completely wiped up immediately.
9. If any of the brake line fittings or the bleed valve is opened at any time, the **AIR MUST BE BLED FROM THE BRAKE LINE.**

Downloaded from www.vulcanriders-sweden.org

Brake Hose

Brake Hose and Pipe Removal/Installation

- Refer to the Brake Hose and Pipe Replacement in the Periodic Maintenance chapter.

Brake Hose and Pipe Inspection

- Refer to the Brake Hose and Pipe Damage and Installation Condition Inspection in the Periodic Maintenance chapter.

Downloaded from www.vulcanriders-sweden.org

Downloaded from www.vulcanriders-sweden.org

Suspension

Table of Contents

Exploded View 13-2
Specifications 13-6
Special Tools 13-7
Front Fork 13-9
  Fork Oil Change 13-9
  Front Fork Removal 13-11
  Front Fork Installation 13-13
  Front Fork Disassembly 13-13
  Front Fork Assembly 13-15
  Inner Tube, Outer Tube Inspection 13-16
  Dust Seal Inspection 13-16
  Spring Tension 13-17
Rear Shock Absorber (Air Type) 13-18
  Rebound Damping Adjustment 13-18
  Air Pressure Adjustment 13-18
  Rear Shock Absorber Removal 13-19
  Rear Shock Absorber Installation 13-20
  Rear Shock Absorber Inspection 13-20
  Rear Shock Absorber Scrapping 13-21
Swingarm 13-22
  Swingarm Removal 13-22
  Swingarm Installation 13-23
  Swingarm Bearing Removal 13-23
  Swingarm Bearing Installation 13-23
  Swingarm Bearing, Sleeve Inspection 13-24
  Grease Seal and Needle Bearing Lubrication 13-24

Downloaded from www.vulcanriders-sweden.org

Exploded View

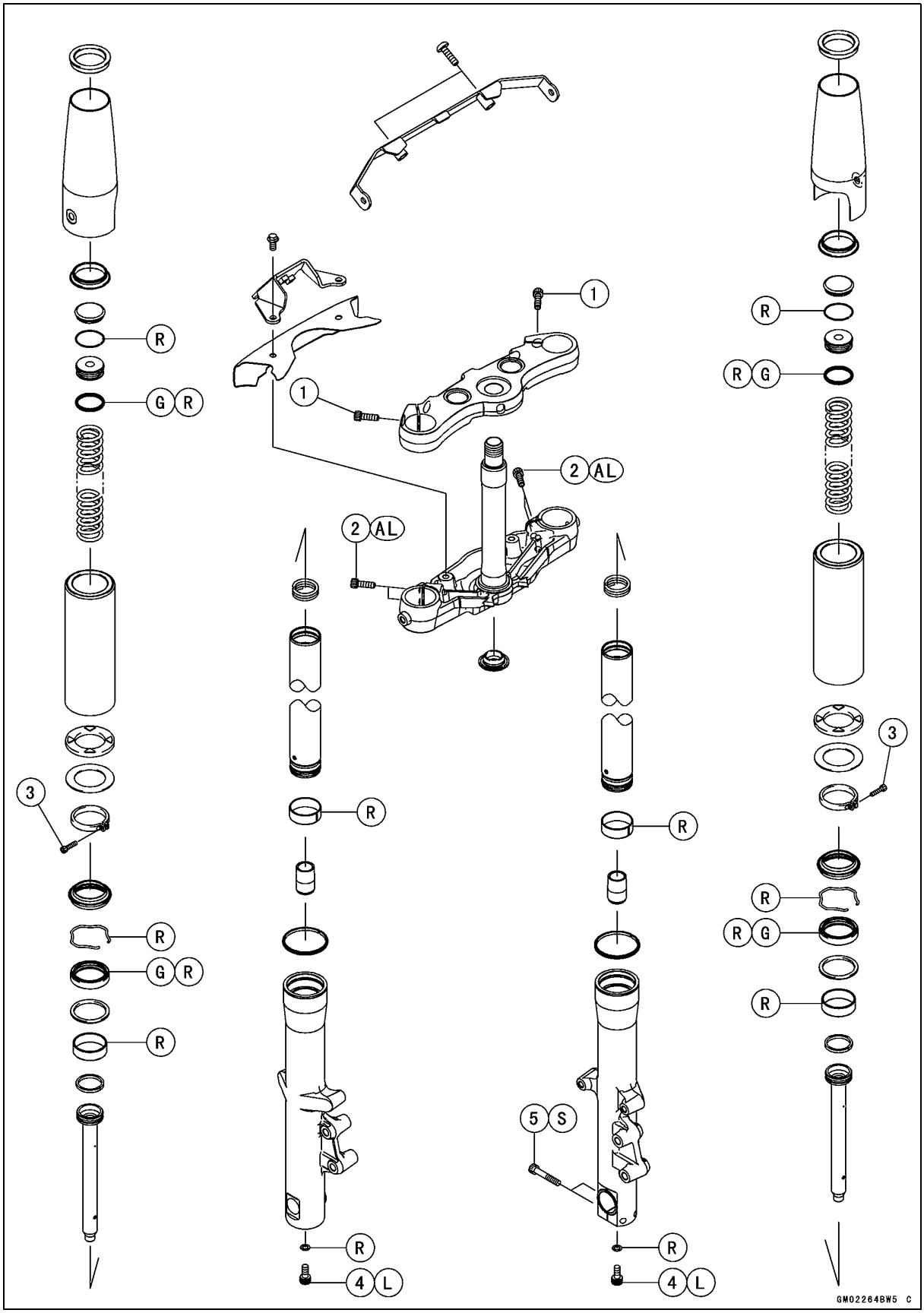

Downloaded from www.vulcanriders-sweden.org

Exploded View

No.	Fastener	Torque			Remarks
		N·m	kgf·m	ft·lb	
1	Upper Front Fork Clamp Bolts	20	2.0	15	
2	Lower Front Fork Clamp Bolts	30	3.0	22	AL
3	Fork Cover Clamp Bolts	4.2	0.43	37 in·lb	
4	Front Fork Bottom Allen Bolts	20	2.0	15	L
5	Front Axle Clamp Bolts	20	2.0	15	S

AL: Tighten the two clamp bolts alternately two times to ensure even tightening torque.
L: Apply a non-permanent locking agent.
G: Apply grease.
R: Replacement Parts
S: Follow the specified tightening sequence.

Downloaded from www.vulcanriders-sweden.org

Exploded View

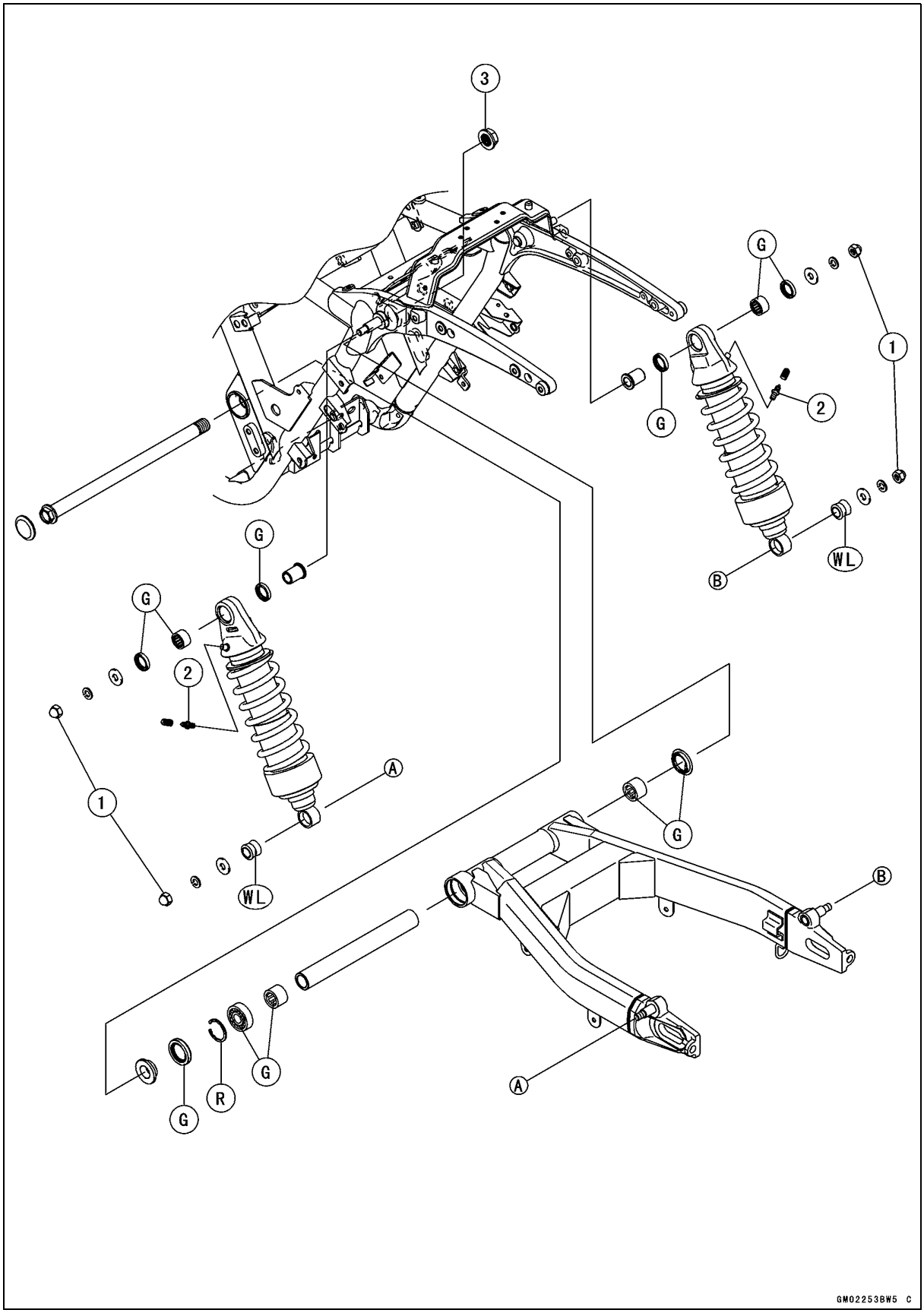

Downloaded from www.vulcanriders-sweden.org

Exploded View

No.	Fastener	Torque			Remarks
		N·m	kgf·m	ft·lb	
1	Rear Shock Absorber Nuts	34	3.5	25	
2	Rear Shock Absorber Air Valve	5.5	0.56	49 in·lb	
3	Swingarm Pivot Shaft Nut	108	11.0	80	

G: Apply grease.
R: Replacement Parts
WL: Apply a soap and water solution or rubber lubricant.

Downloaded from www.vulcanriders-sweden.org

Specifications

Item	Standard
Front Fork (per one unit)	
Fork Inner Tube Diameter	ϕ43 mm (1.7 in.)
Fork Spring Preload Setting	Non-adjustable
Air Pressure	Atmospheric pressure (Non-adjustable)
Damper Setting	Non-adjustable
Fork Oil:	
Viscosity	SHOWA SS-8 or equivalent SAE 10W
Amount (Per Side):	
When changing oil	Approx. 435mL (14.7 US oz.)
After disassembly and completely dry	512 ±2.5mL (17.3 ±0.085 US oz.)
Fork Oil Level	Fully compressed, without fork spring, below from inner tube top 133 ±2 mm (5.23 ±0.08 in.)
Fork Spring Free Length	529.1 mm (20.83 in.) (Service limit: 519 mm (20.4 in.))
Rear Shock Absorber	
Rebound Damper Setting	2nd (No. II) position (Adjustable Range : 1st ~ 4th position)
Spring Preload Setting	Non-adjustable
Air Pressure	Atmospheric Pressure (Usable Range : Atmospheric Pressure ~ 290 kPa (3.0 kgf/cm^2, 43 psi))

Downloaded from www.vulcanriders-sweden.org

Special Tools

Inside Circlip Pliers:
57001-143

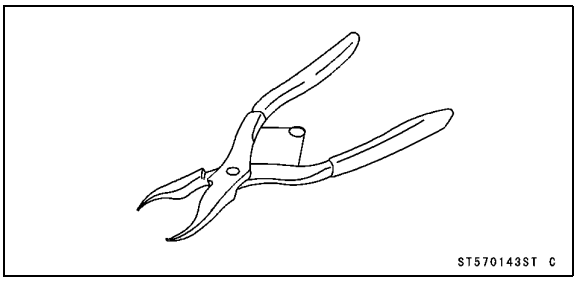

Front Fork Oil Seal Driver:
57001-1219

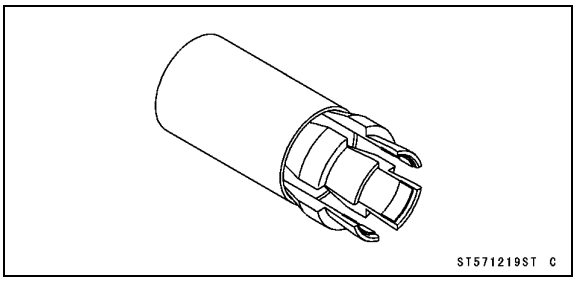

Fork Cylinder Holder Handle:
57001-183

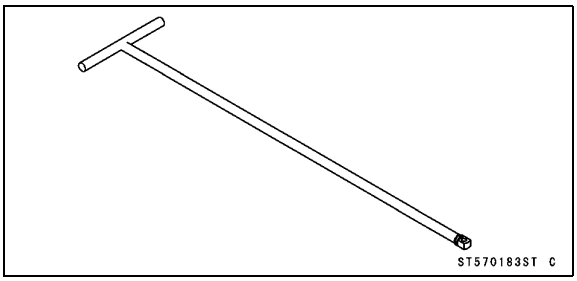

Jack:
57001-1238

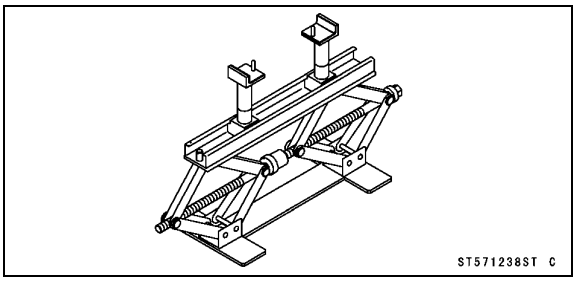

Fork Cylinder Holder Adapter:
57001-1057

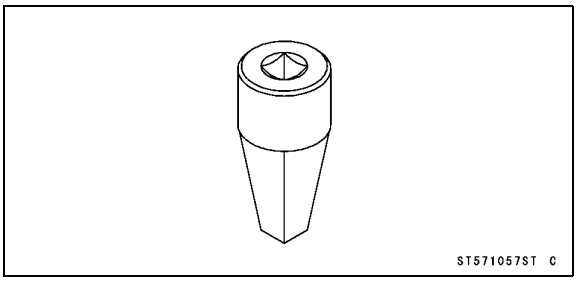

Fork Oil Level Gauge:
57001-1290

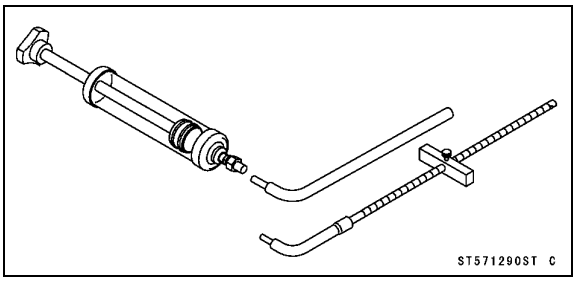

Oil Seal & Bearing Remover:
57001-1058

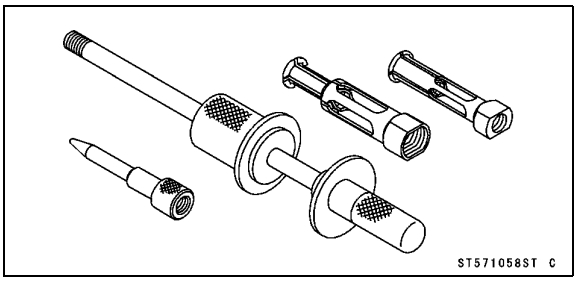

Bearing Remover Head, ϕ20 × ϕ22:
57001-1293

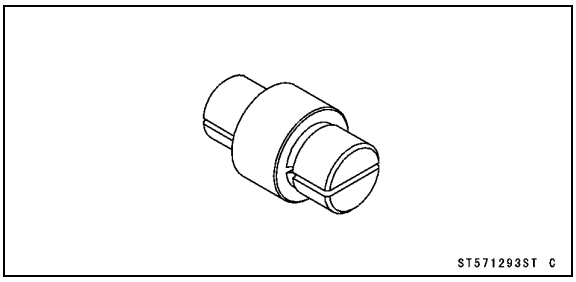

Bearing Driver Set:
57001-1129

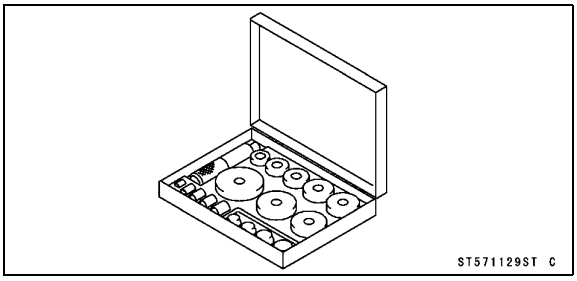

Bearing Remover Shaft, ϕ13:
57001-1377

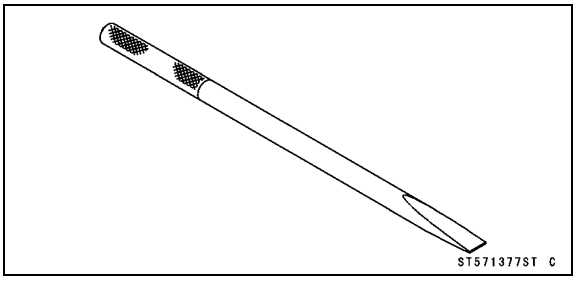

Downloaded from www.vulcanriders-sweden.org

Special Tools

Needle Bearing Driver, ϕ28:
57001-1610

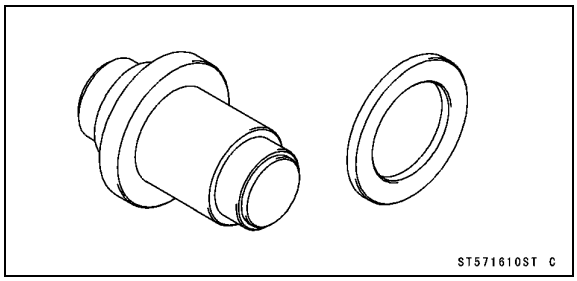

Spacer, ϕ28:
57001-1637

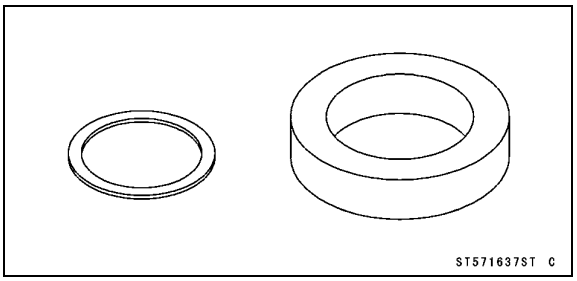

Downloaded from www.vulcanriders-sweden.org

Front Fork

Fork Oil Change

- Remove the front fork (see Front Fork Removal).
- Install the front fork temporary without the upper fork cover for removing the top plug.
- Remove the cap [A].



- Push down the top plug [A] with a suitable tool [B].

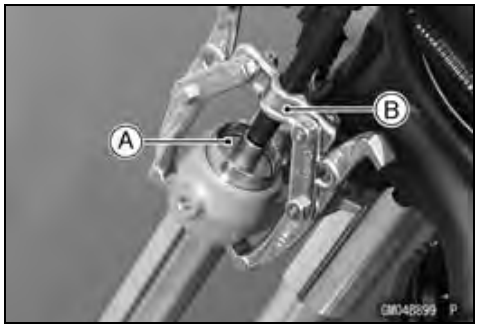

- Remove:
  Retaining Ring [A]
  Top Plug [B]
  Fork Spring
  Front Fork



- Remove:
  Lower Fork Cover [A]
  Rubber Damper [B]
  Washer [C]

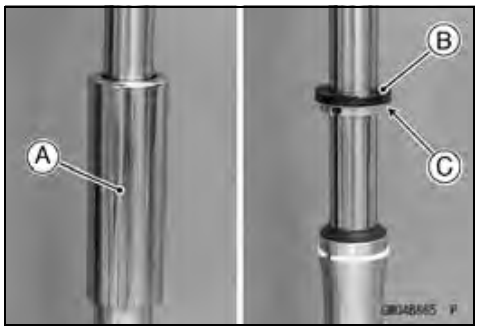

- Drain the fork oil [A] into a suitable container.

○Pump the inner tube up and down at least 10 times to expel the oil from the fork.

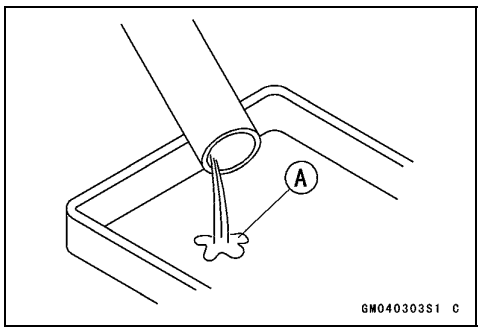

Downloaded from www.vulcanriders-sweden.org

Front Fork

● Fill the front fork with the specified oil.

Fork Oil:

Viscosity:

SHOWA SS-8 or equivalent SAE 10W

Amount (Per Side):

When changing oil:

Approx. 435mL (14.7 US oz.)

After disassembly and completely dry:

512 ±2.5 mL (17.3 ±0.085 US oz.)

● Wait for about 5 minutes so that any suspended air bubbles can surface.

● Measure the oil level, using the fork oil level gauge [A].

Special Tool - Fork Oil Level Gauge: 57001-1290

○Set the gauge stopper [B] so that its lower side shows the oil level distance specified [C].

○Insert the gauge hose into the inner tube [D] and position the stopper across the top of the inner tube [E].

○Pull the handle slowly to draw out the excess oil until no more oil comes up the hose.

★If no oil is drawn out from the beginning, there is not enough oil in the fork. Pour in some more oil, then draw out the excess.

Fork Oil Level (Fully compressed, without fork spring)
Standard: 133 ±2 mm (5.23 ±0.08 in.)

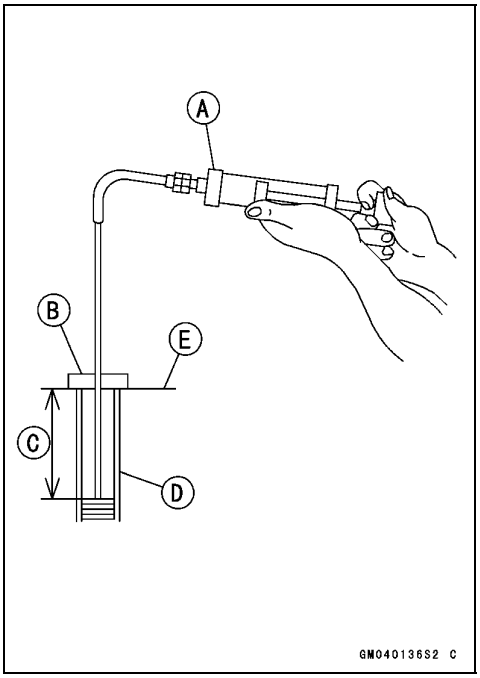

● Install
Washer [A]
Rubber Damper [B]
Lower Fork Cover [C]

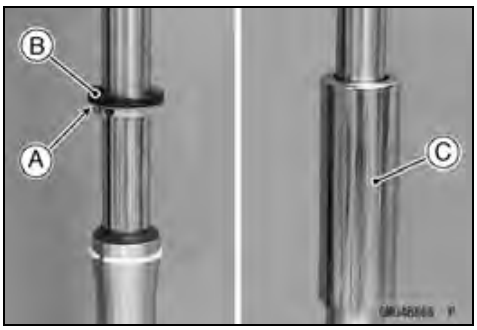

Downloaded from www.vulcanriders-sweden.org

Front Fork

● Install the fork spring with the smaller end [A] facing downward [B].
Upward [C]

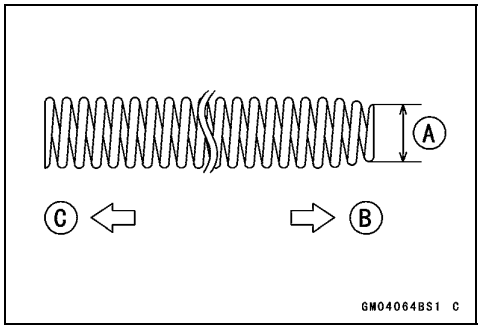

● Install the front fork temporary without the upper fork cover.
● Replace the O-ring [A] and retaining ring with new ones.
● Put the top plug [B] onto the spring, and push down it with a suitable tool.



● Install the retaining ring [A] into the groove of the inner tube.
● Install the cap, and reinstall the front fork correctly (see Front Fork Installation).
● Install the removed parts (see appropriate chapters).



Front Fork Removal

● Remove:
Windshield (see Windshield Removal in the Frame chapter)
Headlight Unit (see Headlight Body Removal in the Electrical System chapter)
Front Fender (see Front Fender Removal in the Frame chapter)
Front Wheel (see Front Wheel Removal in the Wheels/Tires chapter)

NOTE

○*If the front fork is to be disassembled, or if oil is to be changed, remove the top plug previously (see Fork Oil Change).*

Downloaded from www.vulcanriders-sweden.org

Front Fork

- Disconnect the connectors [A].
- Clear the harness from the clamp [B].

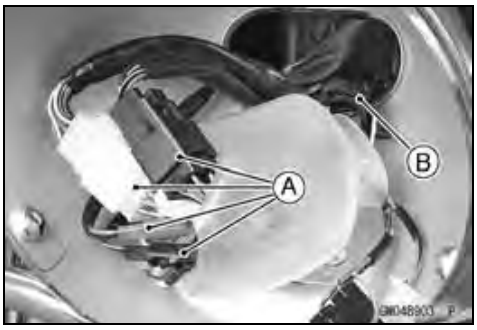

- Remove:
  Bolts [A] (Both Sides)
  Headlight Body [B] with Bracket



- Remove:
  Bolts [A]
  Turn Signal Light Bracket [B]
  Stem Cover [C]

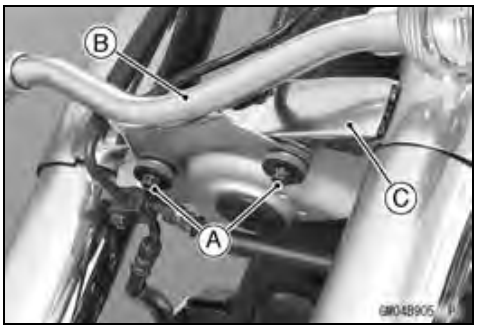

- Remove:
  Bolts [A]
  Holder [B]

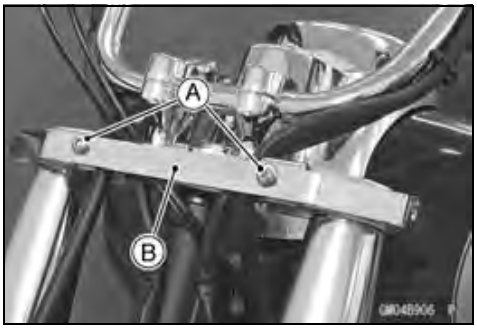

- Turn the upper front fork cover [A] to show the clamp bolts.
- Loosen:
  Upper Front Fork Clamp Bolt [B]
  Lower Front Fork Clamp Bolts [C]
- Hold the upper front fork cover by hand, and pull out the front fork with a twisting motion.

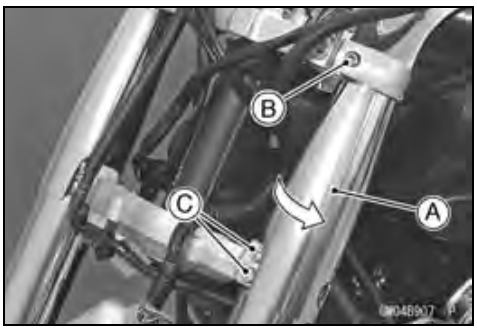

Downloaded from www.vulcanriders-sweden.org

Front Fork

Front Fork Installation

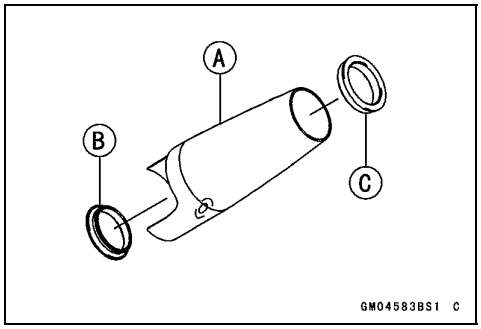

● Install the rubber dampers onto the upper fork cover [A].
Thin Damper (Part No.: 92161-0604) [B]
Thick Damper (Part No.: 92161-0799) [C]



● Install the fork together with the upper fork cover [A].
○The top end of the inner tube is flush [B] with the upper surface of the steering stem head.
● Tighten:

Torque - Upper Front Fork Clamp Bolts: 20 N·m (2.0 kgf·m, 15 ft·lb)
Lower Front Fork Clamp Bolts: 30 N·m (3.0 kgf·m, 22 ft·lb)

NOTE

○*Tighten the two lower clamp bolts alternately two times to ensure even tightening torque.*

Front Fork Disassembly

● Drain the fork oil (see Fork Oil Change).

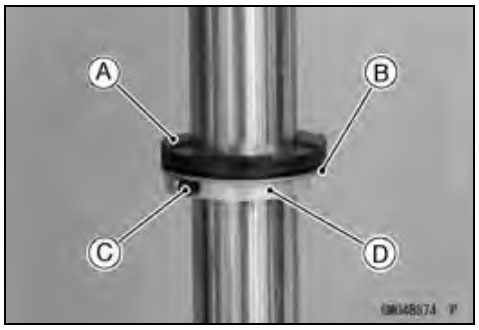

● Remove:
Rubber Damper [A]
Washer [B]
Fork Cover Clamp Bolt [C]
Fork Cover Clamp [D]

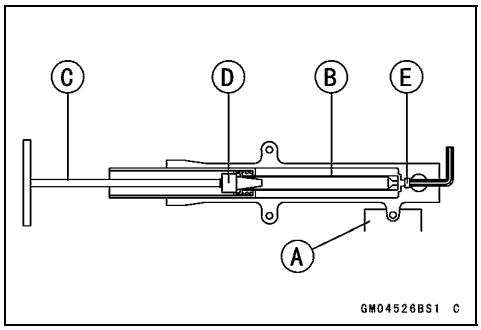

● Hold the front fork horizontally in a vise [A].
● Stop the cylinder unit [B] from turning by using the special tools.

Special Tools - Fork Cylinder Holder Handle [C]:57001-183
Fork Cylinder Holder Adapter [D]:57001-1057

● Unscrew the bottom Allen bolt [E], and take the gasket out of the bottom of the outer tube.

Downloaded from www.vulcanriders-sweden.org

Front Fork

● Take the cylinder unit [A] out of the inner tube [B].

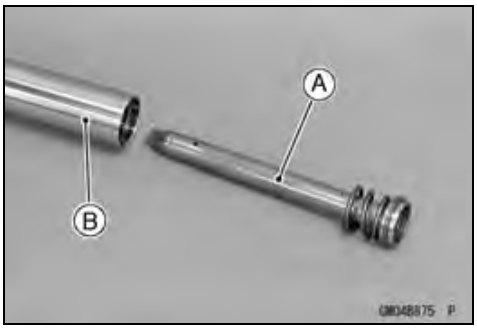

● Remove the dust seal [A].



● Remove the retaining ring [A] from the outer tube.



● Separate the inner tube [A] from the outer tube [B] as follows:
○Holding the outer tube by hand, pull the inner tube several times to pull out the inner tube.
● Take out the cylinder base out of the outer tube.

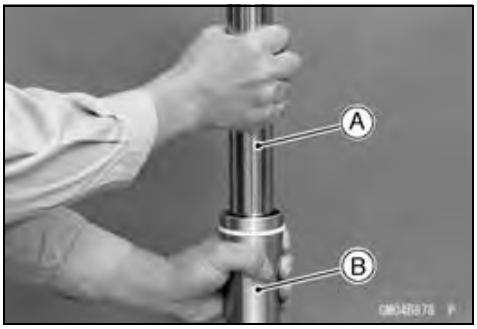

● Remove the inner [A] and outer [B] guide bushings, washer [C] and oil seal [D] from the inner tube.

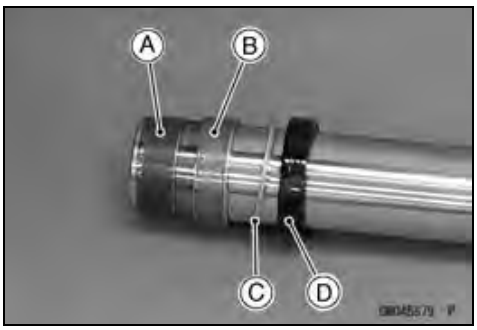

Downloaded from www.vulcanriders-sweden.org

Front Fork

Front Fork Assembly

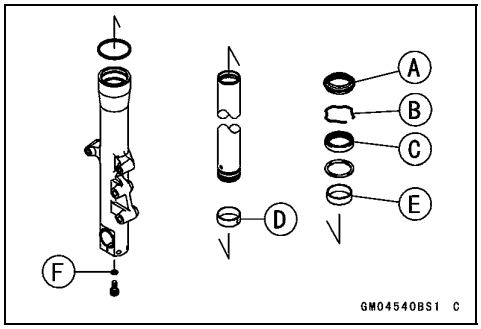

- Replace the following parts with new ones.
  Dust Seal [A]
  Retaining Ring [B]
  Oil Seal [C]
  Inner Guide Bushing [D]
  Outer Guide Bushing [E]
  Bottom Allen Bolt Gasket [F]

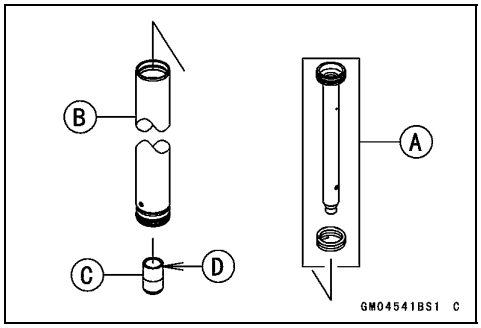

- Put the cylinder unit [A] with the spring into the inner tube [B], protruding from the inner tube, and install the cylinder base [C] onto the bottom end of the cylinder unit.

○Install the cylinder base with the tapered end [D] up.

- Install the inner tube, cylinder unit, and cylinder base as a set into the outer tube.

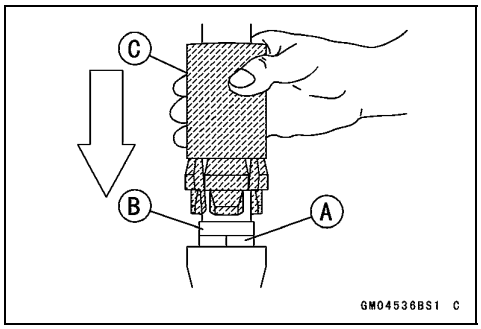

- Install the new guide bushing [A] with a used guide bushing [B] on it by tapping the used guide bushing with fork oil seal driver [C] until it stops.

Special Tool - Front Fork Oil Seal Driver: 57001-1219

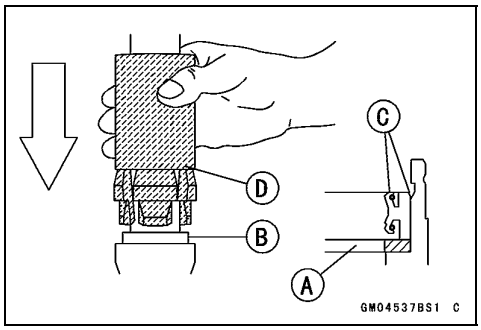

- Apply grease to the oil seal lips.
- Install the washer [A] and the oil seal [B] into the outer tube.

○Turn the flat side [C] of the seal upward.

Special Tool - Front Fork Oil Seal Driver [D]: 57001-1219

- Install the retaining ring.

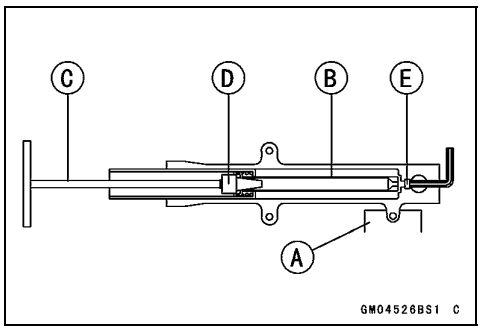

- Hold the front fork horizontally in a vise [A].
- Hold the cylinder unit [B] with the special tools.

Special Tools - Fork Cylinder Holder Handle [C]: 57001-183
Fork Cylinder Holder Adapter [D]: 57001 -1057

- Apply a non-permanent locking agent to the threads of the Allen bolt [E] and tighten it.

Torque - Front Fork Bottom Allen Bolt: 20 N·m (2.0 kgf·m, 15 ft·lb)

Downloaded from www.vulcanriders-sweden.org

Front Fork

● Install the front fork cover clamp [A] as shown.
Inner Tube [B]
About 248 mm (9.76 in.) [C]

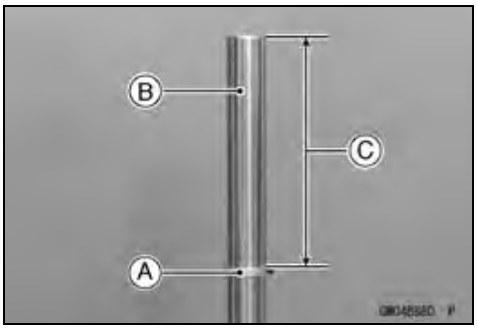

● Tighten:

Torque - Fork Cover Clamp Bolt: 4.2 N·m (0.43 kgf·m, 37 in·lb)

● Pour in the specified type of oil (see Fork Oil Change).

Inner Tube, Outer Tube Inspection

● Visually inspect the inner tube [A] and repair any damage.
○Nick or rust damage can sometimes be repaired by using a wet-stone to remove sharp edges or raised areas which cause seal damage.
★If the damage is not repairable, replace the inner tube. Since damage to the inner tube damages the oil seal, replace the oil seal whenever the inner tube is repaired or replaced.

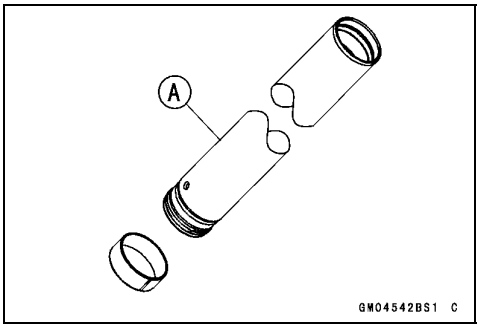

CAUTION

If the inner tube is badly bent or creased, replace it. Excessive bending, followed by subsequent straightening, can weaken the inner tube.

● Temporarily assemble the inner and outer tubes, and pump [A] them back and forth manually to check for smooth operation.
★If you feel binding or catching, the inner and outer tubes must be replaced.

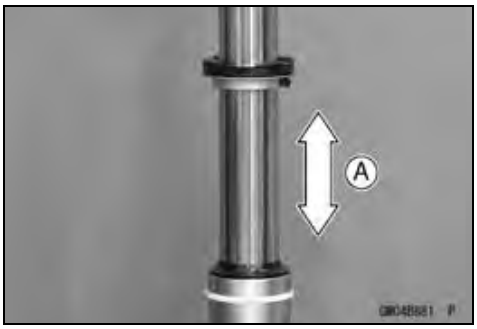

⚠ WARNING

A straightened inner or outer fork tube may fail in use, possibly, causing an accident. Replace a badly bent or damaged inner or outer tube, and inspect the other tube carefully before reusing it.

Dust Seal Inspection

★Inspect the dust seal [A] for any signs of deterioration or damage.
★Replace it if necessary.

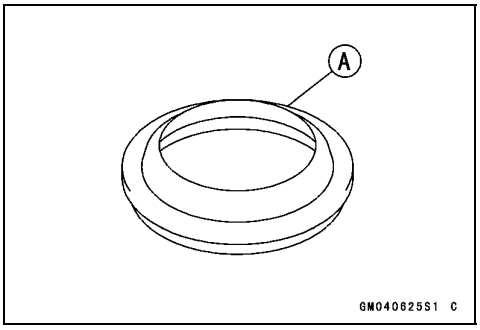

Downloaded from www.vulcanriders-sweden.org

Front Fork

Spring Tension

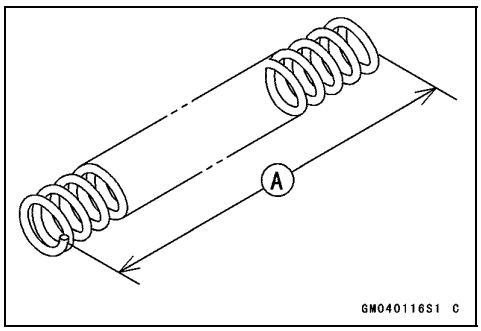

- Since the spring becomes shorter as it weakens, check its free length [A] to determine its condition.

★If the spring of either fork leg is shorter than the service limit, it must be replaced.

★If the length of a replacement spring and that of the remaining spring vary greatly, the remaining spring should also be replaced in order to keep the fork legs balanced for motorcycle stability.

Fork Spring Free Length

Standard: 529.1 mm (20.83 in.)

Service Limit: 519 mm (20.4 in.)

Downloaded from www.vulcanriders-sweden.org

Rear Shock Absorber (Air Type)

Rebound Damping Adjustment

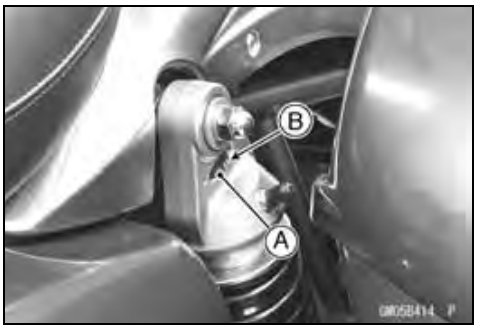

The rebound damping force adjuster on each rear shock absorber has 4 positions so that the rebound damping force can be adjusted for different road and loading conditions. The numbers on the adjuster show the setting position.

● Turn the adjuster [A] until the desired number [B].

○The standard adjuster setting is **No.II** for an average-build rider of 68 kg (150 lb) with no passenger and no accessories.

★If the damper setting feels too soft or too stiff, adjust it in accordance with the following table.

Rebound Damping Adjustment

Adjuster Position	Damping Force	Setting	Load	Road	Speed
I	Weak	Soft	Light	Good	Low
II	↑	↑	↑	↑	↑
III	↓	↓	↓	↓	↓
IIII	Strong	Hard	Heavy	Bad	High

⚠ WARNING

If both adjusters are not adjusted equally, handling may be impaired and a hazardous condition may result.

Air Pressure Adjustment

The air pressure in the rear shock absorbers can be adjusted for different road and loading conditions.

The following table shows an example of air pressure adjustment. To obtain stable handling and a suitable ride, adjust the air pressure as indicated. The standard air pressure is **atmospheric pressure** for an average-build rider of 68 kg (150 lb) with no passenger and no accessories. Ordinarily, the heavier the total load becomes, the higher the air pressure should be set.

Air Pressure Adjustment

Air Pressure	Setting	Load	Road
Atmospheric Pressure (0 kgf/cm², 0 psi)	Soft	Light	Good
↑	↑	↑	↑
↓	↓	↓	↓
290 kPa (3.0 kgf/cm², 43 psi)	Hard	Heavy	Bad

NOTE

○*Check and adjust the air pressure when the rear shock absorbers are cold (room temperature).*

● Raise the rear wheel off the ground using the jack.

Special Tool - Jack: 57001-1238

Downloaded from www.vulcanriders-sweden.org

Rear Shock Absorber (Air Type)

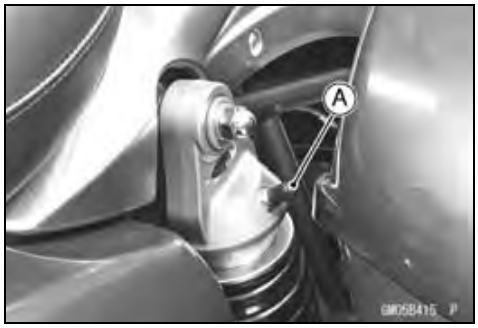

- Take off the air valve cap [A] on both shock absorbers.
- Check the air pressure with the air pressure gauge.

NOTE

○*Do not use tire gauges for checking air pressure. They may not indicate the correct air pressure because of air leakage that occur when the gauge is applied to the valve.*

- Adjust the air pressure.

○To lower the air pressure, push the valve core in slightly. To raise the pressure, inject air through the valve with a tire pump. Change the air pressure within the range specified in the preceding table to suit various riding conditions.

CAUTION

Inject air little by little so that air pressure does not rise rapidly. Air pressure exceeding 290 kPa (3.0 kgf/cm², 43 psi) may damage the oil seal.
Try to set the air pressure of the right and left shock absorbers as equally as possible.

⚠ WARNING

Be sure to adjust the air pressure within the usable range. Pressure too high can produce a hazardous riding condition.
Only air or nitrogen gas can be used. Never inject oxygen or any kind of explosive gas.

Rear Shock Absorber Removal

- Raise the rear wheel off the ground using the jack.

Special Tool - Jack: 57001-1238



- Squeeze the brake lever slowly and hold it with a band [A].

CAUTION

Be sure to hold the front brake when removing the shock absorber, or the motorcycle may fall over. The motorcycle could be damaged.

⚠ WARNING

Be sure to hold the front brake when removing the shock absorber, or the motorcycle may fall over. It could cause an accident and injury.

- Remove:
  Saddlebags (see Saddlebag Removal in the Frame chapter)

Downloaded from www.vulcanriders-sweden.org

Rear Shock Absorber (Air Type)

- Remove the nuts [A], spring washers, and flat washers from both ends of the rear shock absorber [B].
- Pull the rear shock absorber off the frame.

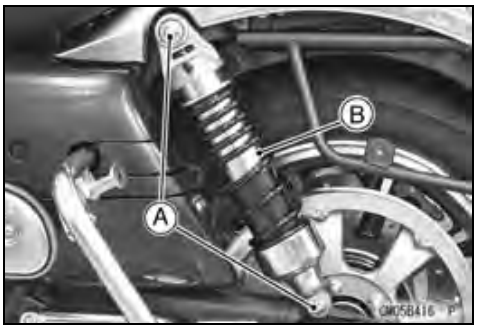

Rear Shock Absorber Installation

- Install the sleeve [A] so the flange side faces inside.
- Install the rear shock absorber.

○Turn the air valve and adjuster toward out.

Flat Washers [B]
Spring Washers [C]

- Tighten:

Torque - Rear Shock Absorber Nuts [D]: 34 N·m (3.5 kgf·m, 25 ft·lb)

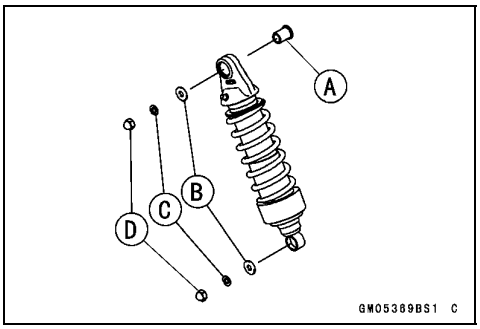

Rear Shock Absorber Inspection

- Remove the rear shock absorbers (see Rear Shock Absorber Removal).
- Visually inspect the following items.

Smooth Stroke
Oil Leakage (see Rear Shock Absorber Oil Leak Inspection in the Periodic Maintenance chapter)
Crack or Dent

★If there is any damage to the rear shock absorber, one unit feels weaker than the other, replace both shock absorbers as a set.

- Visually inspect the rubber bushings [A].

★If they show any signs of damage, replace them.



- Visually inspect the shock absorber sleeves [A] and needle bearings [B].

○The roller in a needle bearing normally wear very little, and wear is difficult to measure. Instead of measuring, inspect the bearing in the shock absorber for abrasion, color change, or other damage.

★If there is any doubt as to the condition of any of the needle bearings or sleeves, replace the sleeves, and needle bearings as a set.

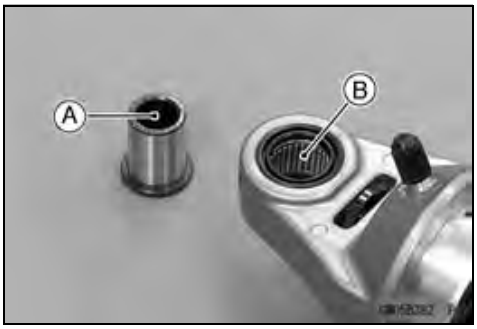

Downloaded from www.vulcanriders-sweden.org

Rear Shock Absorber (Air Type)

Rear Shock Absorber Scrapping

- Remove the rear shock absorber (see Rear Shock Absorber Removal).

⚠ WARNING

Since the rear shock absorber contains air, do not incinerate the rear shock absorber without first releasing the air or it may explode.
Before a rear shock absorber is scrapped, remove the air valve [A].



Downloaded from www.vulcanriders-sweden.org

Swingarm

Swingarm Removal

- Remove:
  Saddlebags (see Saddlebag Removal in the Frame chapter)
  Saddlebag Stays (see Saddlebag Stay Removal in the Frame chapter)
  Rear Fender (see Rear Fender Removal in the Frame chapter)
  Rear Caliper (see Caliper Removal in the Brakes chapter)
  Rear Wheel (see Rear Wheel Removal in the Wheels/Tires chapter)
  Mufflers (see Muffler Body Removal in the Engine Top End chapter)
  Exhaust Pipe (see Exhaust Pipe Removal in the Engine Top End chapter)

- Remove the brake hose clamp [A].
- Clear the brake hose from the hose guide [B].

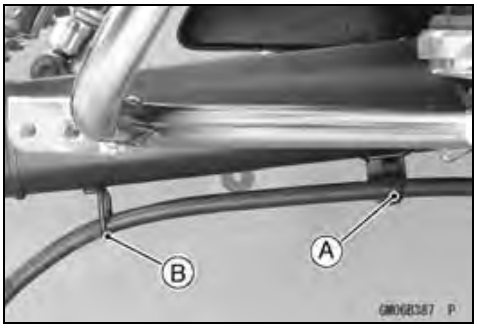

- Remove:
  Rear Shock Absorbers (see Rear Shock Absorber Removal)
  Swingarm Pivot Cap [A] (Left side only)

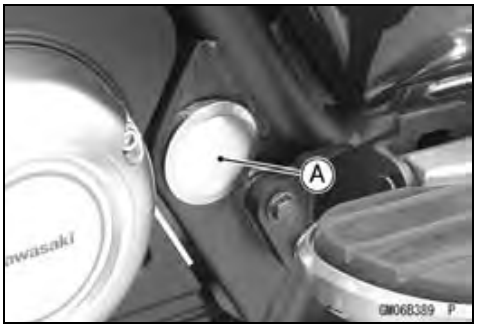

- Remove the swingarm pivot nut [A].
- Pull out the swingarm pivot shaft and take off the swingarm.

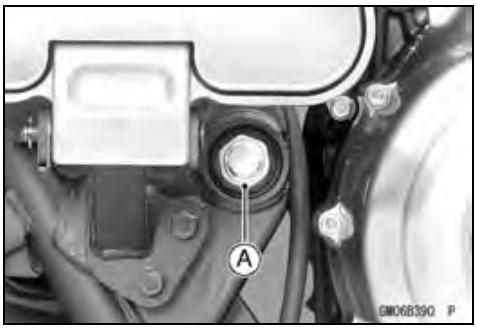

Downloaded from www.vulcanriders-sweden.org

Swingarm

Swingarm Installation

- Apply grease to the grease seal lips [A].

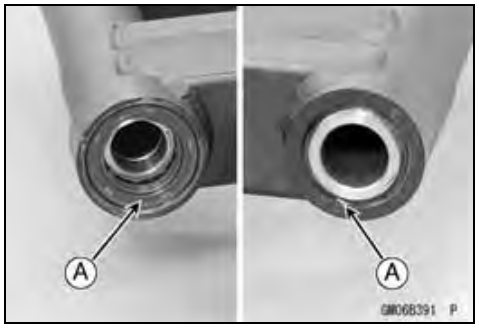

- Install the collar [A].
- Insert the swingarm pivot shaft to install the swingarm.
- Tighten:

Torque - Swingarm Pivot Shaft Nut: 108 N·m (11.0 kgf·m, 80 ft·lb)

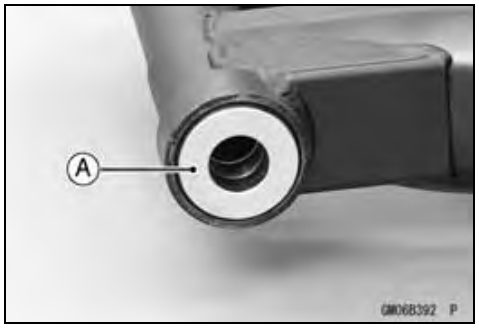

- Move the swingarm up and down [A] to check for abnormal friction, and push and pull [B] it to check for bearing play.
- Install the removed parts (see appropriate chapters).

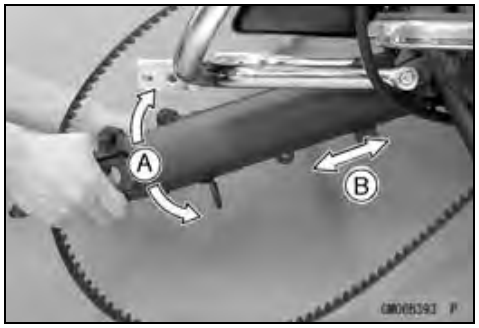

Swingarm Bearing Removal

- Remove the swingarm (see Swingarm Removal).
- Remove:
  Collar [A]
  Grease Seals [B]
  Sleeve [C]
  Circlip [D]

Special Tool - Inside Circlip Pliers: 57001-143

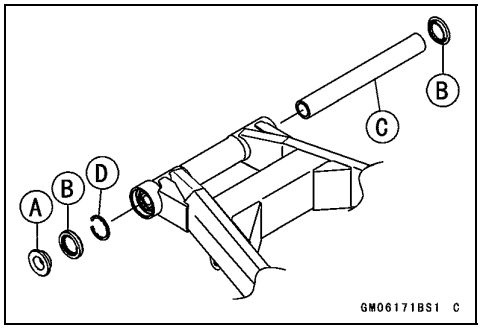

- Remove:
  Ball Bearing [A]
  Needle Bearings [B]

Special Tools - Bearing Remover Head, ϕ20 × ϕ22: 57001-1293
Bearing Remover Shaft, ϕ13: 57001-1377
Oil Seal & Bearing Remover: 57001-1058

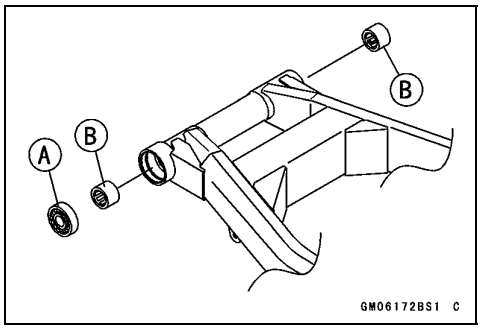

Swingarm Bearing Installation

- Replace the needle bearings, ball bearing, grease seals and circlip with new ones.
- Apply grease to the bearings and grease seal lips.

Downloaded from www.vulcanriders-sweden.org

Swingarm

● Install the needle bearings [A] as shown in the figure.
○Apply grease a little to the outer surface of the bearings.
○Turn the marked side of the bearings toward out.

Special Tools - Needle Bearing Driver, ϕ28: 57001-1610
Spacer, ϕ28: 57001-1637

Left Side [B]
24 ~ 27 mm (0.9 ~ 1.1 in.) [C]
5 ~ 7 mm (0.2 ~ 0.3 in.) [D]

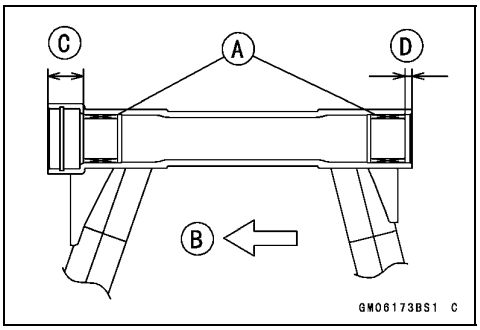

● Press in the ball bearing until it bottomed.
○Apply grease to the outer surface of the bearing.
○Turn the marked side of the bearing toward out.

Special Tool - Bearing Driver Set: 57001-1129

● Install the circlip.

Special Tool - Inside Circlip Pliers: 57001-143

● Install the sleeve.
● Install the grease seals.

Special Tool - Bearing Driver Set: 57001-1129

Swingarm Bearing, Sleeve Inspection

● Remove the swingarm (see Swingarm Removal).
● Remove the grease seals on the swingarm.

CAUTION
Do not remove the bearings for inspection. Removal may damage them.

● Inspect the needle bearings [A] and ball bearing installed in the swingarm.
○The rollers and ball in a bearing normally wear very little, and wear is difficult to measure. Instead of measuring, visually inspect the bearing for abrasion, discoloration, or other damage.
★If the needle bearing and sleeve [B] show any sings of abnormal wear, discoloration or damage, replace them as a set.

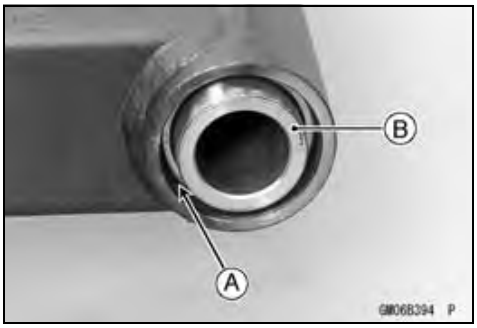

● Turn the ball bearing in the swingarm back and forth [A] while checking for plays, roughness or binding.
★If bearing play, roughness or binding is found, replace the bearing.



Grease Seal and Needle Bearing Lubrication

● Refer to the Swingarm Pivot Lubrication in the Periodic Maintenance chapter.

Downloaded from www.vulcanriders-sweden.org

Steering

Table of Contents

Exploded View 14-2
Special Tools 14-4
Handlebar 14-5
  Handlebar Removal 14-5
  Handlebar Installation 14-5
Steering 14-7
  Handlebar Holder Installation 14-7
  Steering Inspection 14-7
  Steering Adjustment 14-7
Steering Stem 14-8
  Steering Stem Removal 14-8
  Steering Stem Installation 14-9
  Steering Stem Warp 14-10
Steering Stem Bearing 14-11
  Stem Bearing Removal 14-11
  Stem Bearing Installation 14-11
  Stem Bearing Lubrication 14-12
  Stem Cap Deterioration, Damage 14-12

Downloaded from www.vulcanriders-sweden.org

Exploded View

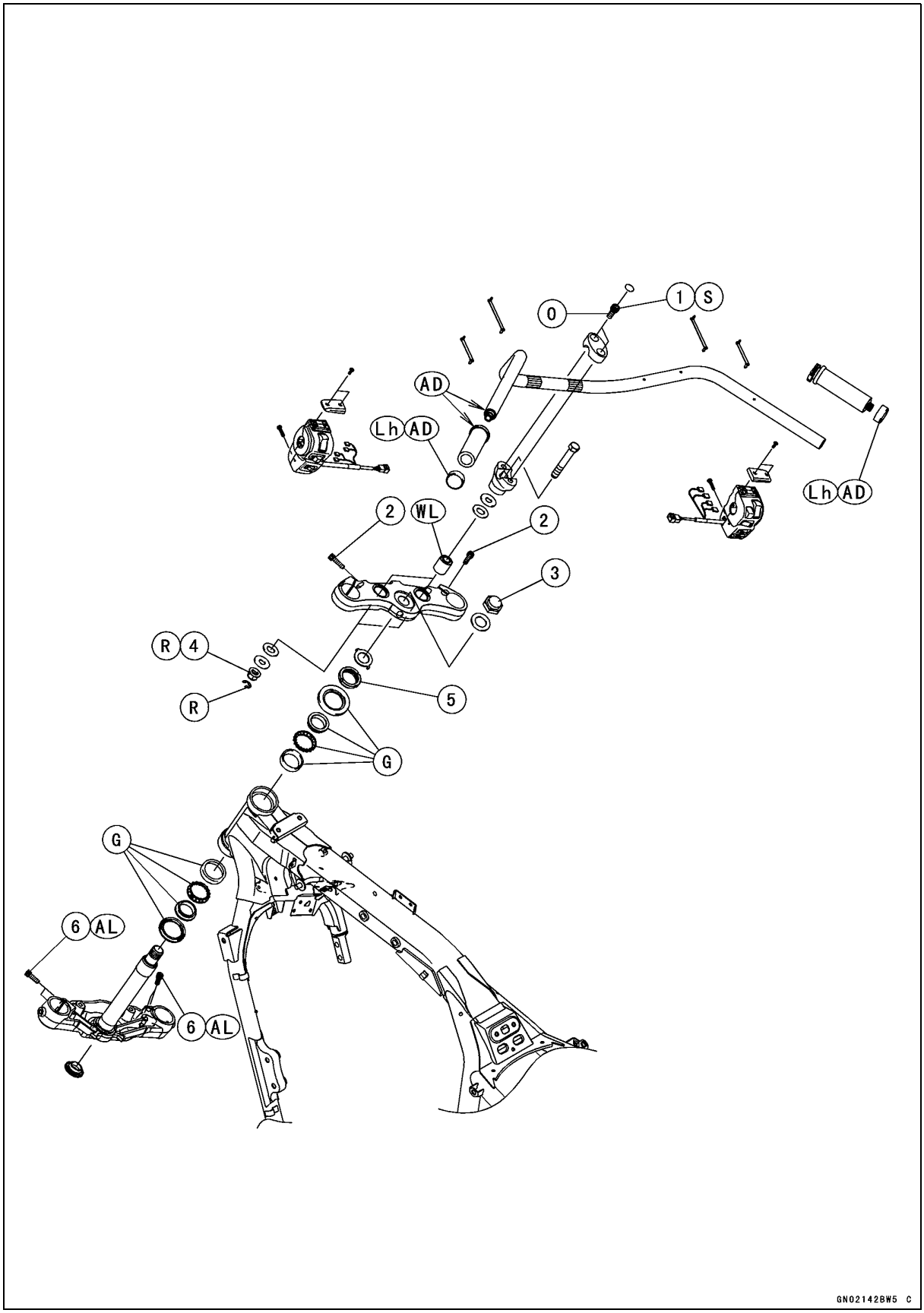

Downloaded from www.vulcanriders-sweden.org

Exploded View

No.	Fastener	Torque			Remarks
		N·m	kgf·m	ft·lb	
1	Handlebar Clamp Bolts	34	3.5	25	O, S
2	Upper Front Fork Clamp Bolts	20	2.0	15	
3	Steering Stem Head Nut	88	9.0	65	
4	Handlebar Holder Nuts	59	6.0	44	R
5	Steering Stem Nut	29	3.0	22	
6	Lower Front Fork Clamp Bolts	30	3.0	22	AL

AD: Apply adhesive.
AL: Tighten the two clamp bolts alternately two times to ensure even tightening torque.
G: Apply grease.
Lh: Left-hand threads.
O: Apply 2-stroke oil.
R: Replacement Parts
S: Follow the specified tightening sequence.
WL: Apply a soap and water solution or rubber lubricant.

Downloaded from www.vulcanriders-sweden.org

Special Tools

Head Pipe Outer Race Press Shaft:
57001-1075

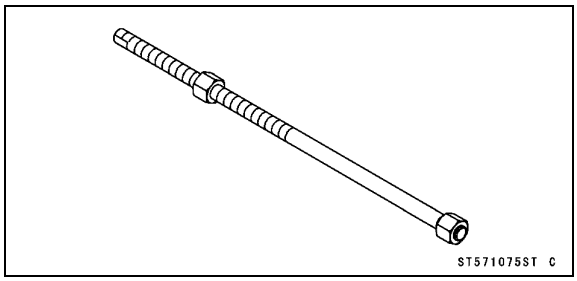

Head Pipe Outer Race Remover ID > 37 mm:
57001-1107

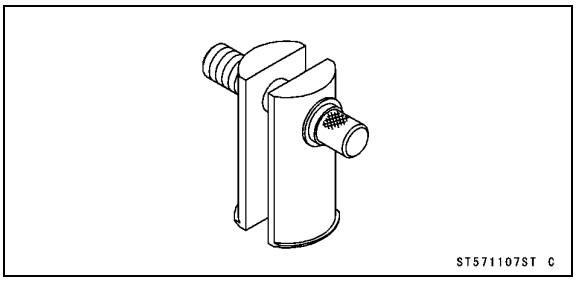

Head Pipe Outer Race Driver, ϕ54.5:
57001-1077

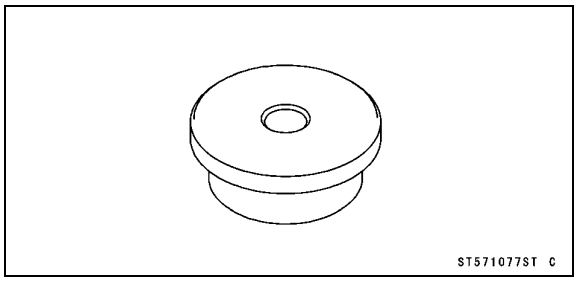

Steering Stem Bearing Driver, ϕ42.5:
57001-1344

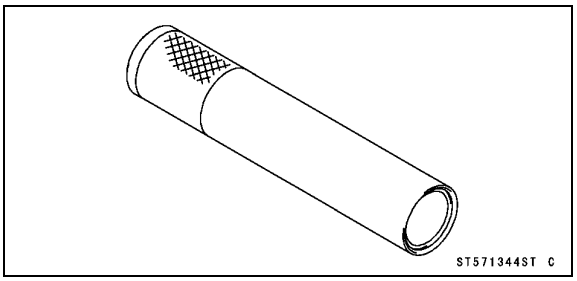

Steering Stem Nut Wrench:
57001-1100

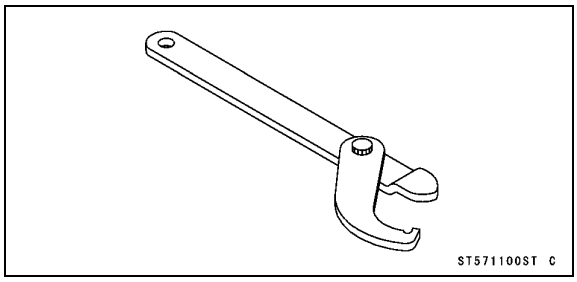

Steering Stem Bearing Driver Adapter, ϕ41.5:
57001-1345

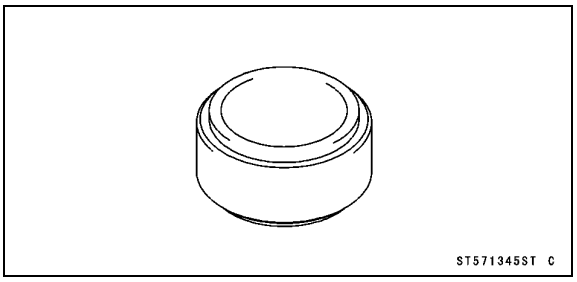

Downloaded from www.vulcanriders-sweden.org

Handlebar

Handlebar Removal

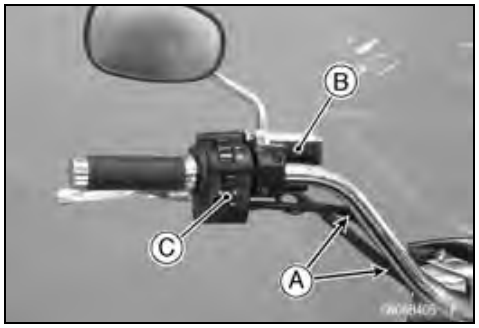

- Remove:
  Clamps [A]
  Clutch Master Cylinder [B] (see Clutch Master Cylinder Removal in the Clutch chapter)
  Left Handlebar Switch Housing [C]

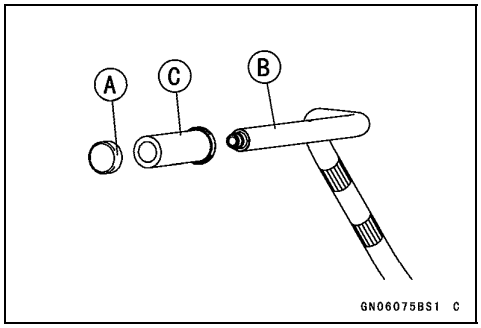

- Remove the left grip end cap [A] from the handlebar [B].

○The left grip end cap has left-hand threads.

- Remove the left grip [C].

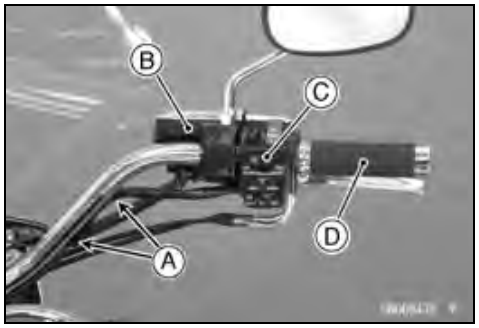

- Remove:
  Clamps [A]
  Front Brake Master Cylinder [B] (see Front Master Cylinder Removal in the Brakes chapter)
  Right Handlebar Switch Housing [C]
  Throttle Grip [D]

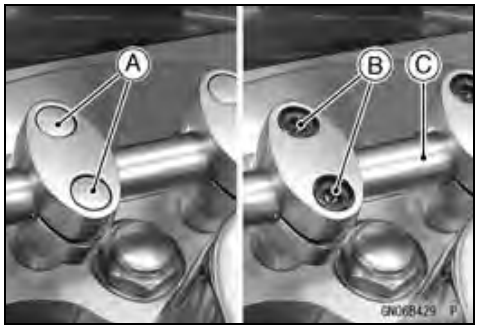

- Remove the handlebar clamp bolt caps [A].
- Unscrew the handlebar clamp bolts [B] and remove the handlebar [C] from the holder.

Handlebar Installation

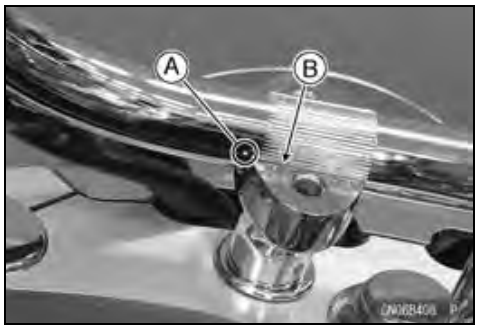

- Align the punch mark [A] of the handlebar with the handlebar holder upper surface [B].

Downloaded from www.vulcanriders-sweden.org

Handlebar

- Install the handlebar clamps [A] so that the cut side [B] on the clamp points at the rear.
- Apply 2-stroke oil to the threads of the handlebar clamp bolts [C].
- Tighten:

Torque - Handlebar Clamp Bolts: 34 N·m (3.5 kgf·m, 25 ft·lb)

○Tighten the clamp bolts, front first and then the rear. If the handlebar clamp is correctly installed, there will be no gap at the front and a gap at the rear after tightening.

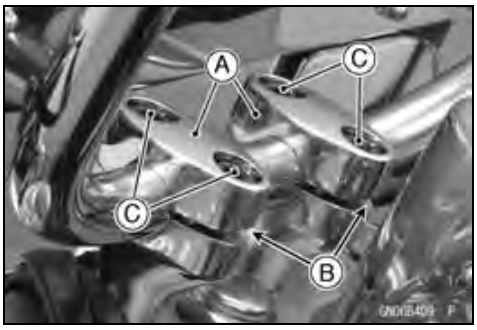

- Install the left handlber switch housing [A].

○Fit the projection [B] and the hole [C].

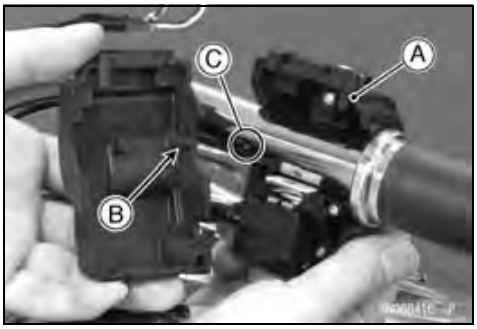

○Install the cap [A] temporary, then tighten the screw [B].

○Tighten the screws [C].

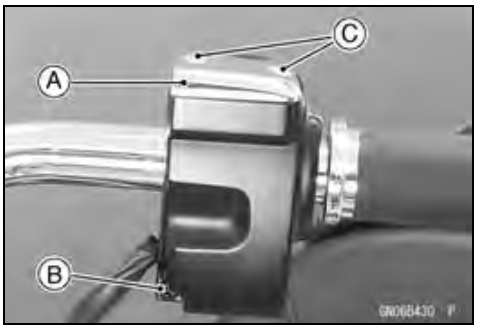

- Apply rubber adhesive to the inside of the left grip [A].
- Insert the left grip until punch mark [B] in the handlebar.
- Apply adhesive to the threads of the left grip end cap [C].
- Tighten the end cap by turning counterclockwise.
- Install the right handlebar switch housing and throttle grip (see Cable Installation in the Fuel System (DFI) chapter).

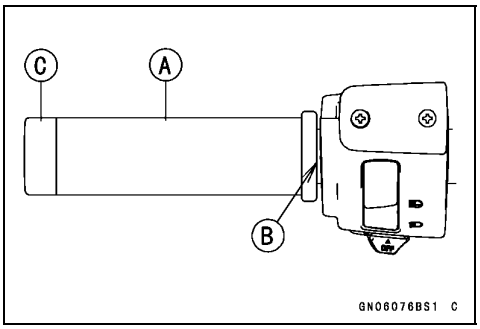

Downloaded from www.vulcanriders-sweden.org

Steering

Handlebar Holder Installation

- When the rubber bushings [A] are installed in the steering stem head [B], apply soap and water solution or rubber lubricant to the outer surface first, and then press and insert them until rubber bush end is about 1.0 mm (0.039 in.) [C] from the steering stem head surface.
- Install:
  Washers [D]
  Dampers [E]
  Handlebar Holder Bolts [F]
  New Handlebar Holder Nuts [G]
- Before tightening the handlebar holder nuts, install the handlebar on the handlebar holders temporarily (see Handlebar Installation).
- Tighten:

Torque - Handlebar Holder Nuts: 59 N·m (6.0 kgf·m, 44 ft·lb)

- Replace the circlips [H] with new ones.
- Fit the circlips into the grooves of the handlebar holder bolts securely.

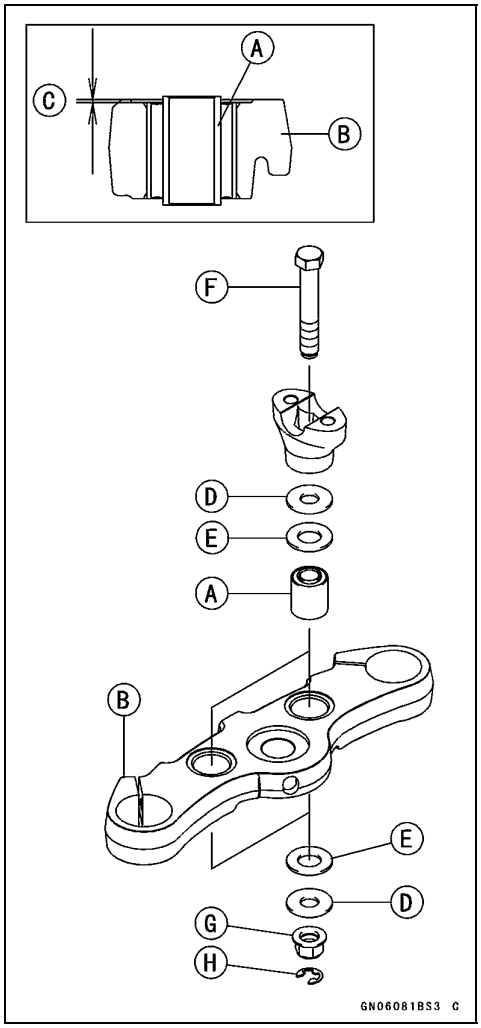

Steering Inspection

- Refer to the Steering Play Inspection in the Periodic Maintenance chapter.

Steering Adjustment

- Refer to the Steering Play Adjustment in the Periodic Maintenance chapter.

Downloaded from www.vulcanriders-sweden.org

Steering Stem

Steering Stem Removal

- Remove:
  Windshield (see Windshield Removal in the Frame chapter)
  Headlight Unit (see Headlight Body Removal in the Electrical System chapter)
- Disconnect the connectors [A].
- Clear the harness from the clamp [B].

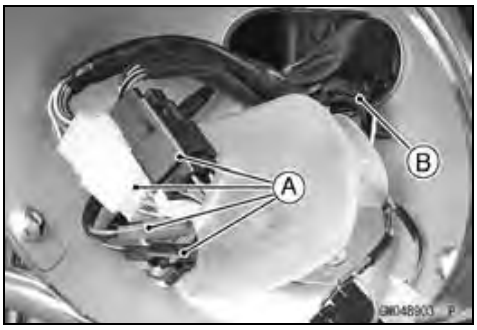

- Remove:
  Bolt [A] (Both Sides)
  Headlight Body [B] with Bracket



- Remove:
  Bolt [A]
  Turn Signal Light Bracket Bolts [B]
  Turn Signal Light Bracket [C]
  Stem Cover [D]

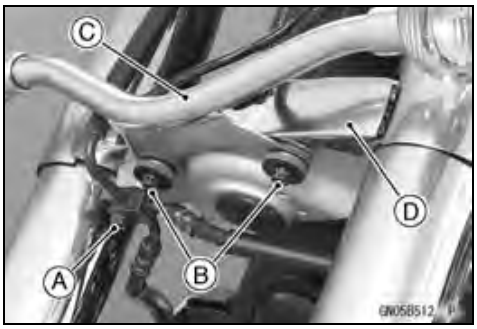

- Remove:
  Bolts [A]
  Holder [B]

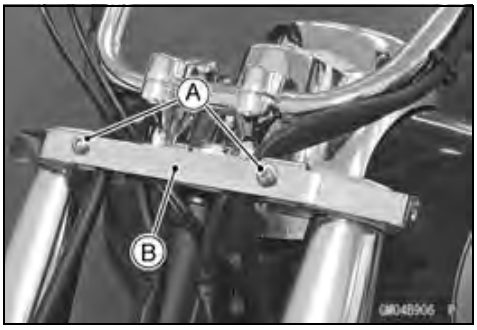

- Remove the handlebar (see Handlebar Removal).

CAUTION

Take care not to bend the brake and clutch hoses sharply.

Downloaded from www.vulcanriders-sweden.org

Steering Stem

● Remove:
Steering Stem Head Nut [A]
Washer [B]
Front Fork (see Front Fork Removal in the Suspension chapter)
Steering Stem Head [C]

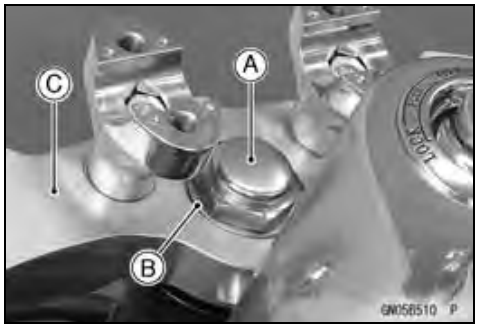

● Remove:
Lock Washer [A]



● Hold the steering stem base [A] by hand.
● Remove the steering stem nut [B] with the steering stem nut wrench [C].

Special Tool - Steering Stem Nut Wrench: 57001-1100

● Take off the steering stem.



Steering Stem Installation

● Install the stem bearings (see Stem Bearing Installation).
● Install the stem base [A], and hold it by hand.
● Tighten:

Torque - Steering Stem Nut [B]: 29 N·m (3.0 kgf·m, 22 ft·lb)

Special Tool - Steering Stem Nut Wrench [C]: 57001-1100



● Fit the claw [A] of the lock washer to the groove of the stem nut [B].
● Install the steering stem head.

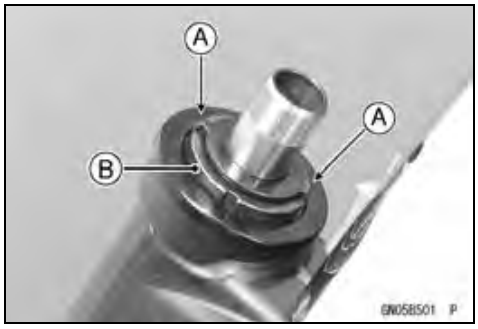

Downloaded from www.vulcanriders-sweden.org

Steering Stem



- Install the front fork temporary.
- Install the washer [A] and the steering stem head nut [B].

Torque - Steering Stem Head Nut: 88 N·m (9.0 kgf·m, 65 ft·lb)

- Install the removed parts (see appropriate chapters).
- Check and adjust the following after installation.
  Steering (see Steering Play Inspection in the Periodic Maintenance chapter)
  Throttle Cables (see Throttle Control System Inspection in the Periodic Maintenance chapter)
  Headlight Aim (see Headlight Aiming Inspection in the Periodic Maintenance chapter)
- Check the front brake effectiveness.

⚠ WARNING

Do not attempt to ride the motorcycle until a full brake lever is obtained by pumping the brake lever until the pads are against the disc. The brakes will not function on the first application of the lever if this is not done.

Steering Stem Warp

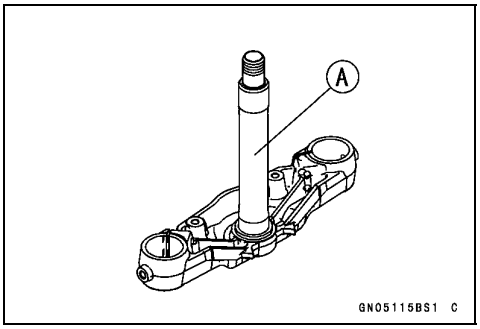

- Whenever the steering stem is removed, or if the steering cannot be adjusted for smooth operation, check the steering stem for straightness.

★If the steering stem [A] is bent, replace the steering stem.

Downloaded from www.vulcanriders-sweden.org

Steering Stem Bearing

Stem Bearing Removal

- Remove the steering stem (see Steering Stem Removal in this chapter).
- Remove the upper stem bearing inner race [A] and bearing [B].

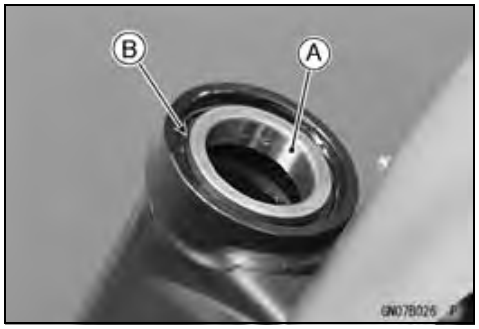

- Drive out the bearing outer races from the head pipe.

Special Tool - Head Pipe Outer Race Remover ID > 37 mm [A]: 57001-1107

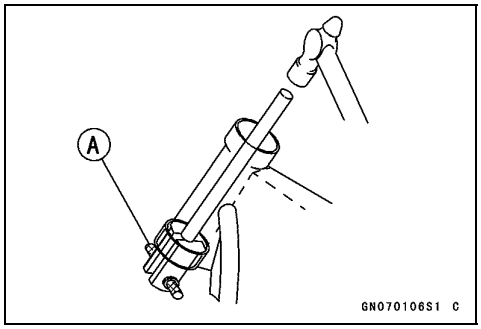

NOTE

○*If either steering stem bearing is damaged, it is recommended that both the upper and lower bearings (including outer races) be replaced with new ones.*

- Remove the lower bearing inner race [A] which is pressed onto the steering stem with a suitable commercially available chisel [B].

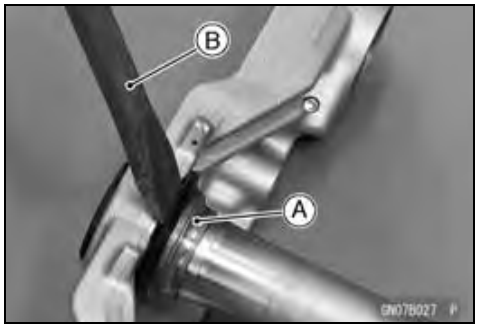

Stem Bearing Installation

- Replace the bearing outer races with new ones.
- Apply grease to the outer races, and drive them into the head pipe at the same time.

Special Tools - Head Pipe Outer Race Press Shaft [A]: 57001-1075
Head Pipe Outer Race Driver, ϕ54.5 [B]: 57001-1077

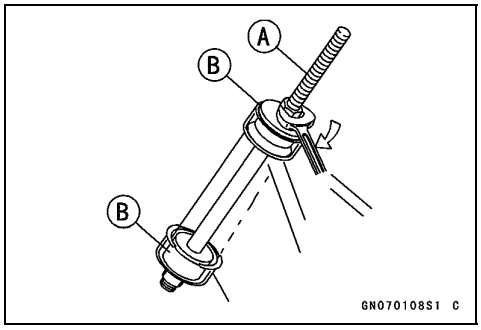

Downloaded from www.vulcanriders-sweden.org

Steering Stem Bearing

- Replace the bearing inner races and oil seal with new ones.
- Apply grease to the oil seal.
- Drive the lower ball bearing inner race [A] applied the grease onto the stem.

Special Tools - Steering Stem Bearing Driver, ϕ42.5 [B]: 57001-1344
Steering Stem Bearing Driver Adapter, ϕ41.5 [C]: 57001-1345

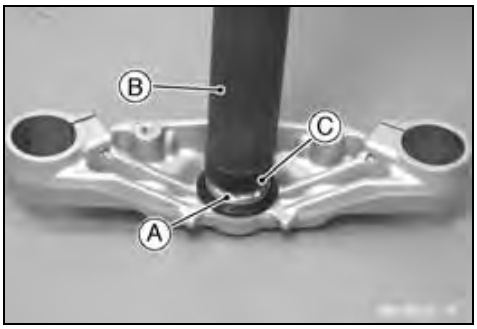

- Apply grease to the ball bearings [A] and the inner race [B].
- Install the lower ball bearing to the stem.

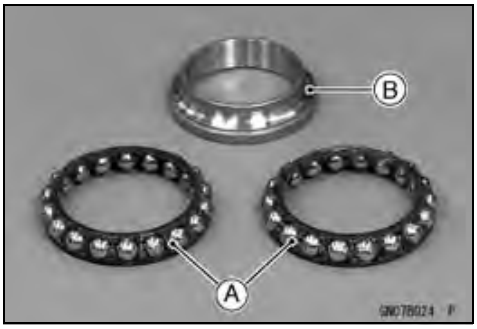

- Settle the inner races in place as follows.

○Tighten the steering stem nut with **55 N·m (5.6 kgf·m, 41 ft·lb)** of torque first, and loosen it a fraction of a turn until it turns lightly. Afterward tighten it again with specified torque using a stem nut wrench [A] in the direction shown.

○Check that there is no play and the steering stem turns smoothly without rattles. If not, the steering stem bearings may be damaged.

Special Tool - Steering Stem Nut Wrench: 57001-1100

Torque - Steering Stem Nut: 29 N·m (3.0 kgf·m, 22 ft·lb)

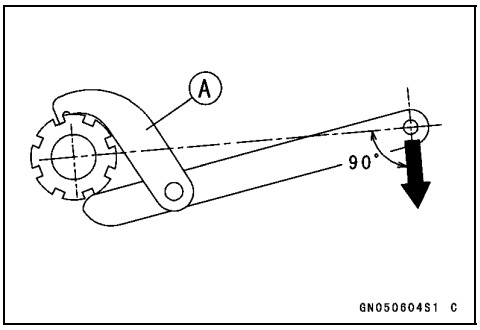

- Install the removed parts (see appropriate chapters).

Stem Bearing Lubrication

- In accordance with the Periodic Maintenance Chart, lubricate the steering stem bearings. Refer to the Stem Bearing Lubrication in the Periodic Maintenance chapter.

Stem Cap Deterioration, Damage

★Replace the stem cap if its grease seal [A] shows damage.

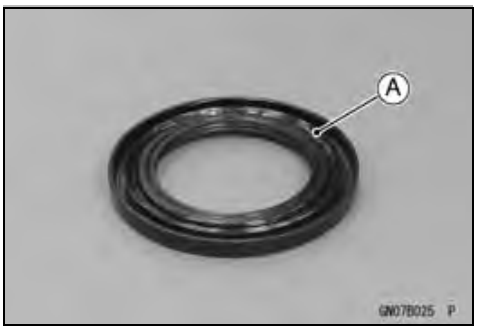

Downloaded from www.vulcanriders-sweden.org

Frame

Table of Contents

Exploded View 15-2
Special Tool 15-8
Seats 15-9
  Rear Seat Removal 15-9
  Rear Seat Installation 15-9
  Front Seat Removal 15-9
  Front Seat Installation 15-9
Side Covers 15-10
  Left Side Cover Removal 15-10
  Left Side Cover Installation 15-10
  Right Side Cover Removal 15-11
  Right Side Cover Installation 15-11
Fenders 15-12
  Front Fender Removal 15-12
  Rear Fender Removal 15-12
  Rear Fender Installation 15-13
Battery Case 15-14
  Battery Case Removal 15-14
  Battery Case Installation 15-14
Footboard 15-15
  Front Footboard Removal/Installation 15-15
  Front Footboard Disassembly 15-16
  Front Footboard Assembly 15-16
  Rear Footboard Removal/Installation 15-17
  Rear Footboard Disassembly 15-17
  Rear Footboard Assembly 15-18
Side Stand 15-19
  Side Stand Removal 15-19
  Side Stand Installation 15-19
Windshield 15-20
  Windshield Height Adjustment 15-20
  Windshield and Deflector Removal 15-20
  Windshield and Deflector Installation 15-20
  Windshield Assembly 15-20
  Deflector Assembly 15-21
Saddlebags 15-22
  Saddlebag Lid Unlocking 15-22
  Saddlebag Lid Locking 15-22
  Saddlebag Removal 15-22
  Saddlebag Installation 15-22
  Saddlebag Stay Removal 15-23
  Saddlebag Stay Installation 15-24
Guards 15-25
  Front Guard Removal/Installation 15-25
  Rear Guard Removal/Installation. 15-25
Rear View Mirrors 15-26
  Rear View Mirror Removal (Other than EUR and SEA Models) 15-26
  Rear View Mirror Installation (Other than EUR and SEA Models) 15-26
  Rear View Mirror Removal (EUR and SEA Models) 15-26
  Rear View Mirror Installation (EUR and SEA Models) 15-27
Downtube 15-28
  Downtube Removal 15-28
  Downtube Installation 15-28
Tandem Grip 15-29
  Tandem Grip Removal 15-29
  Tandem Grip Installation 15-29
Frame 15-30
  Frame Inspection 15-30

Downloaded from www.vulcanriders-sweden.org

Exploded View

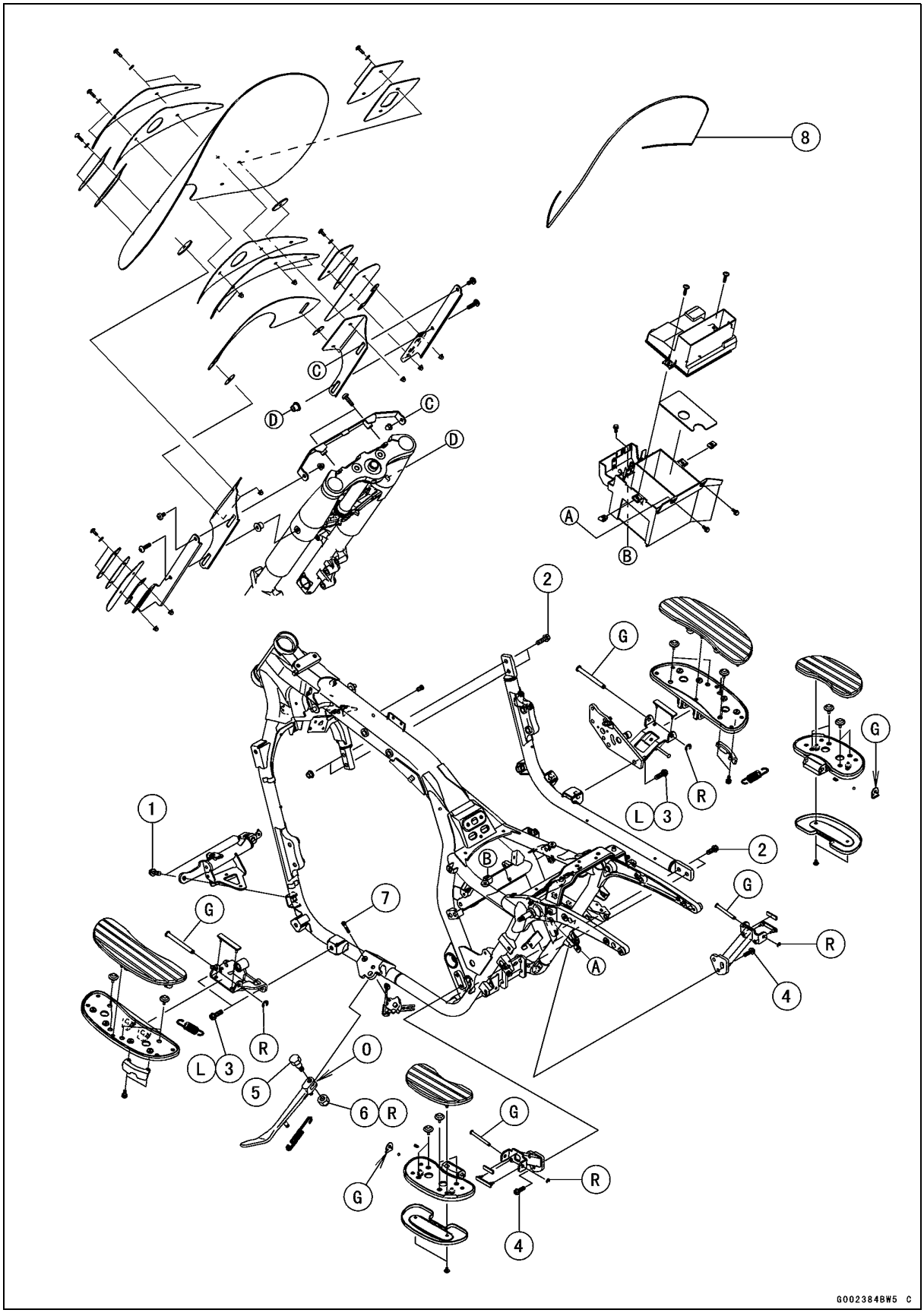

Downloaded from www.vulcanriders-sweden.org

Exploded View

No.	Fastener	Torque			Remarks
		N·m	kgf·m	ft·lb	
1	Cross Pipe Bolts	34	3.5	25	
2	Downtube Bolts	59	6.0	44	
3	Front Footboard Bracket Bolts	34	3.5	25	L
4	Rear Footboard Bracket Bolts	25	2.5	18	
5	Sidestand Mounting Bolt	44	4.5	32	
6	Sidestand Mounting Nut	44	4.5	32	R
7	Sidestand Switch Mounting Bolt	8.8	0.90	78 in·lb	L

8. Trim (EUR Models)
G: Apply grease.
L: Apply a non-permanent locking agent.
O: Apply 2-stroke oil.
R: Replacement Parts

Downloaded from www.vulcanriders-sweden.org

Exploded View

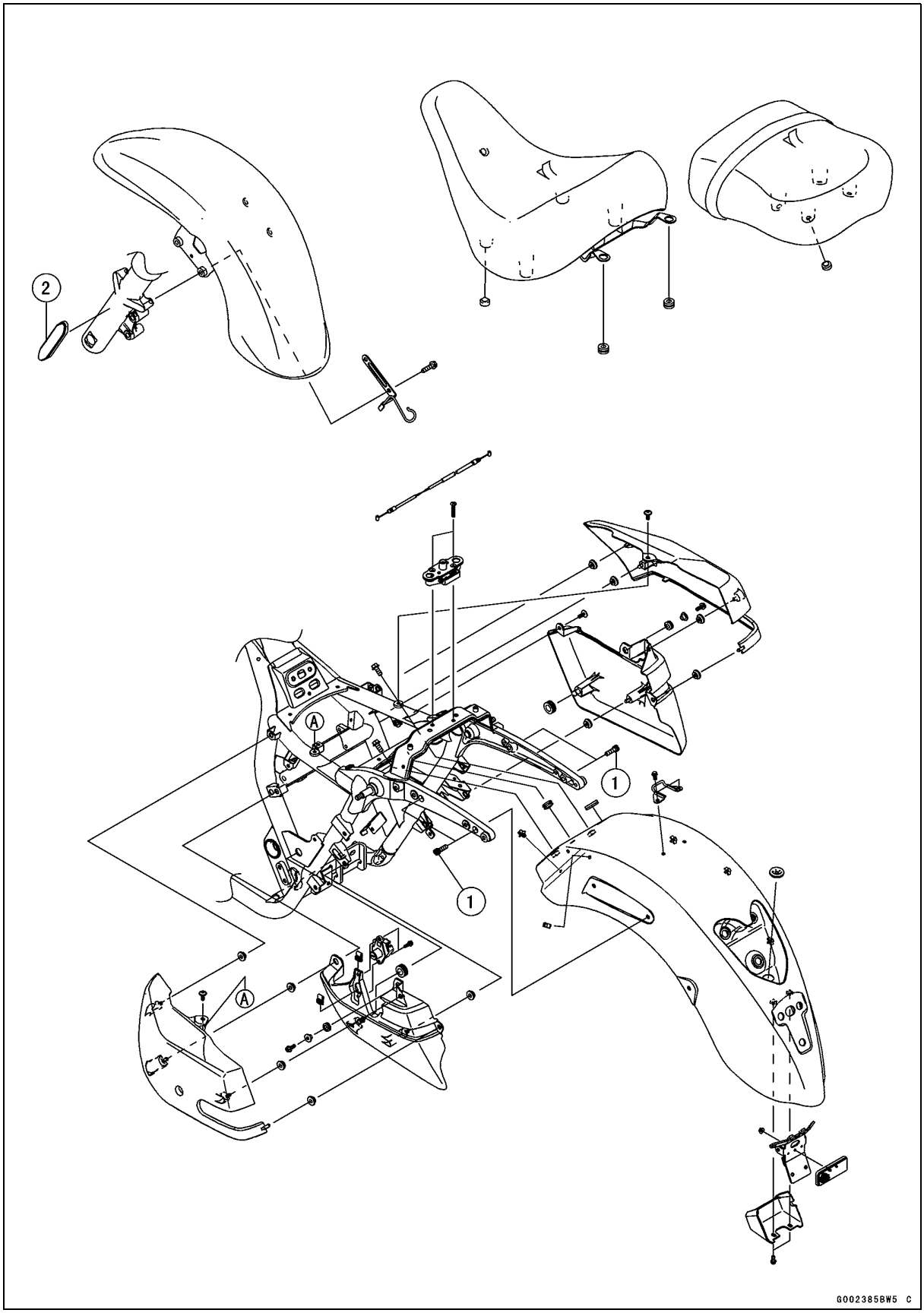

Downloaded from www.vulcanriders-sweden.org

Exploded View

No.	Fastener	Torque			Remarks
		N·m	kgf·m	ft·lb	
1	Rear Fender Allen Bolts	25	2.5	18	

2. Other than EUR and AU Models

Downloaded from www.vulcanriders-sweden.org

Exploded View

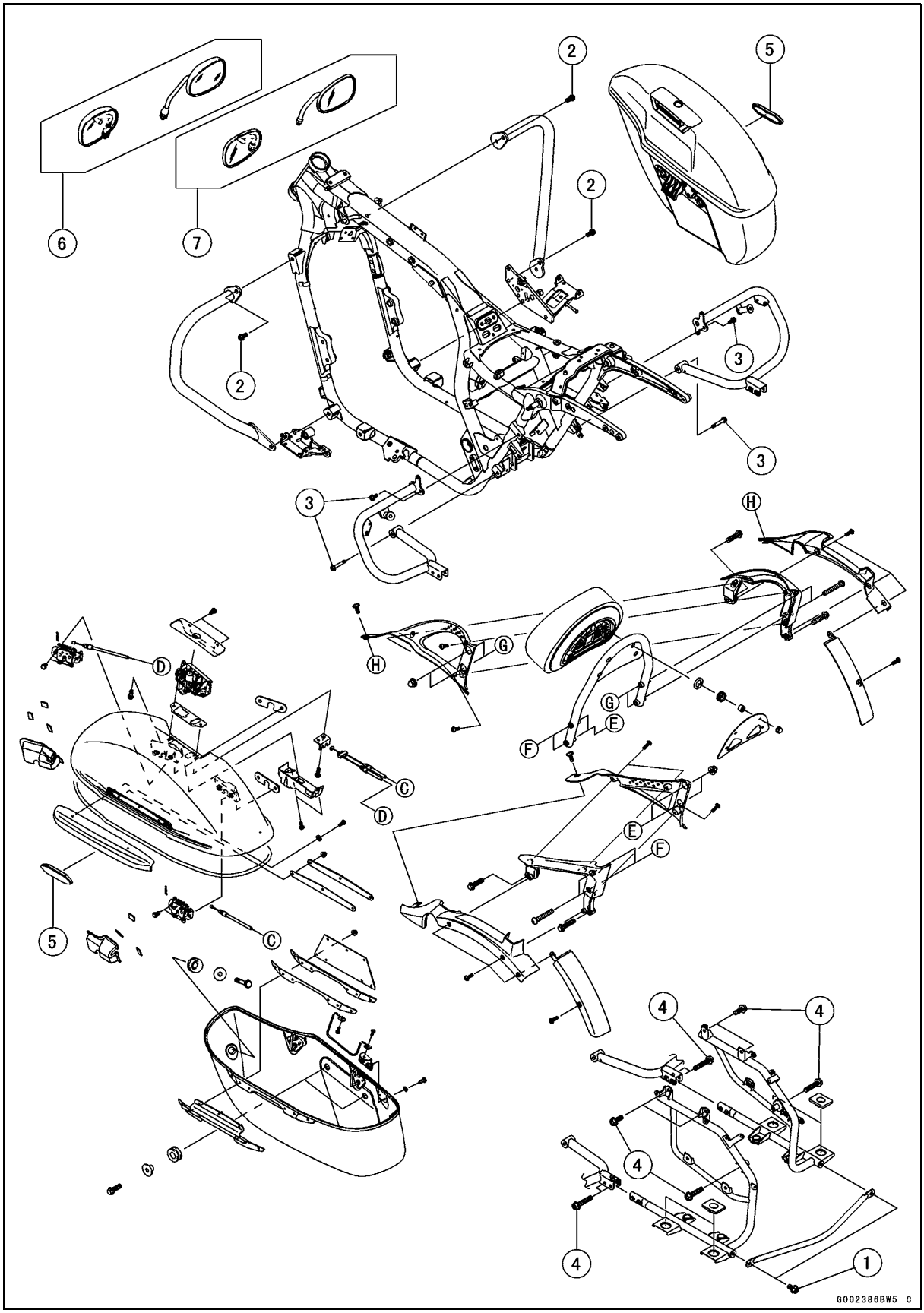

Downloaded from www.vulcanriders-sweden.org

Exploded View

No.	Fastener	Torque			Remarks
		N·m	kgf·m	ft·lb	
1	Cross Bar Mounting Bolts	25	2.5	18	
2	Front Guard Mounting Bolts	34	3.5	25	
3	Rear Guard Mounting Bolts	25	2.5	18	
4	Saddlebag Stay Bolts	25	2.5	18	

5. Other than EUR and AU Models
6. EUR and SEA Models
7. US, CA, CAL and AU Models

Downloaded from www.vulcanriders-sweden.org

Special Tool

Jack:
57001-1238

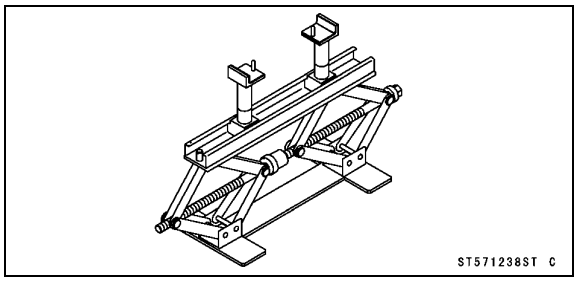

Downloaded from www.vulcanriders-sweden.org

Seats

Rear Seat Removal

- Insert the ignition key into the seat lock [A], and turn it counterclockwise.
- Pull up the front part of the rear seat [B], and remove the rear seat forward.

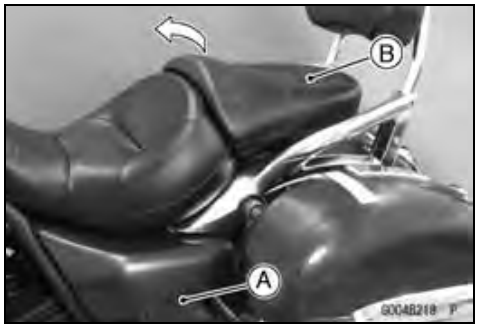

Rear Seat Installation

- Slip the rear seat hook [A] into the brace [B] on the rear fender, and insert the latches [C] into the holes [D] on the frame.
- Push down the front part of the rear seat until the lock with a click.

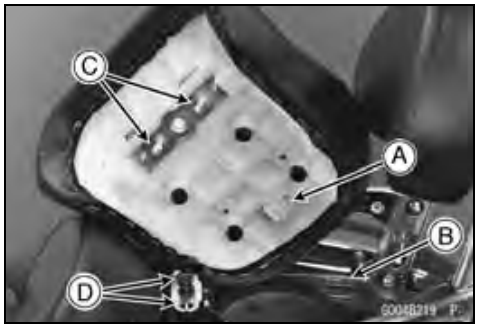

Front Seat Removal

- Remove the rear seat (see Rear Seat Removal).
- Detach the grommets [A] from the projections on the frame, and remove the front seat [B] backward.

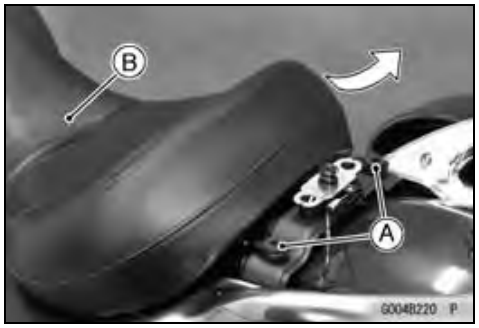

Front Seat Installation

- Slip the front seat hook [A] into the brace [B] on the fuel tank.
- Fit the grommets [C] to the projections [D] on the frame.

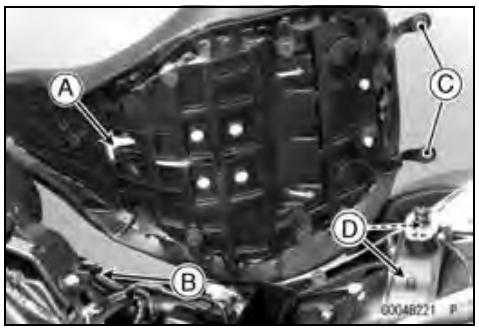

Downloaded from www.vulcanriders-sweden.org

Side Covers

CAUTION

Be careful not to scratch the painted surface during removal or installation.

Left Side Cover Removal

- Remove:
  Seats (see Front/Rear Seat Removal)
  Screw [A]
- Detach the projections [B], and remove the upper side cover [C].

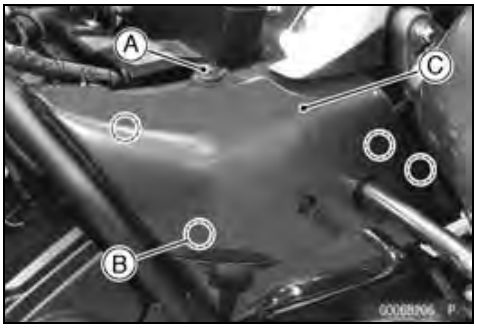

- Remove the bolt [A].
- Detach the projections [B], and remove the lower side cover [C].



- Remove:
  Bolts [A]
  Key Cylinder [B]

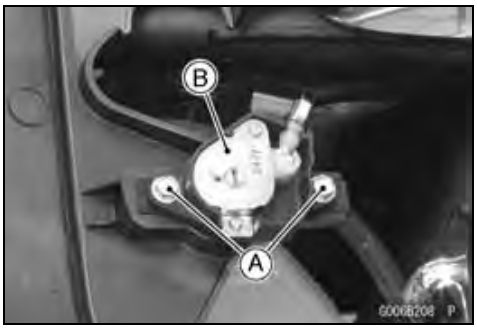

Left Side Cover Installation

- Install the key cylinder, and tighten the bolts.
- Insert the projections [A] of lower side cover into the grommets [B].
- Tighten the bolt.

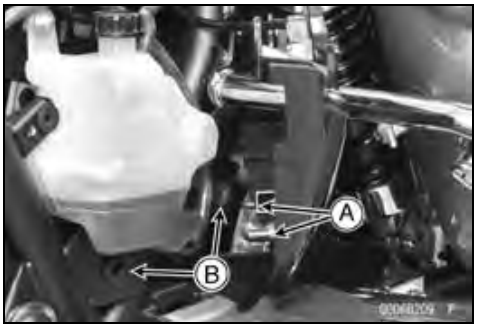

Downloaded from www.vulcanriders-sweden.org

Side Covers

- Insert the projections [A] of upper side cover into the grommets [B].
- Tighten the screw.

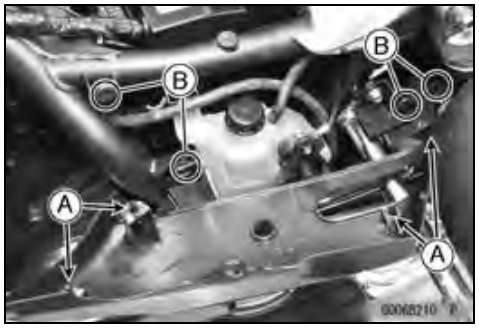

Right Side Cover Removal

- Remove:
  Seats (see Front/Rear Seat Removal)
  Screw [A]
- Detach the projections [B], and remove the upper side cover [C].

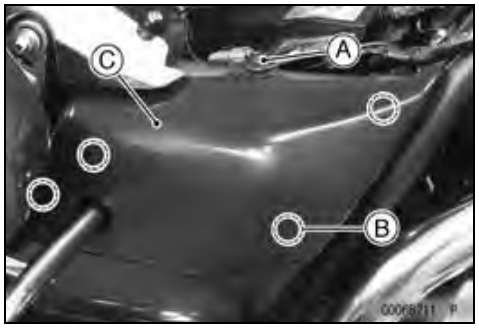

- Remove:
  Bolt [A]
  Screw [B]
- Detach the projections [C], and remove the lower side cover [D].

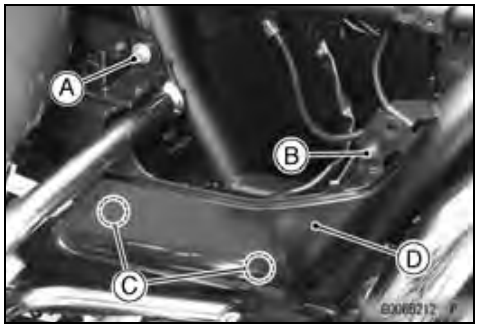

Right Side Cover Installation

- Insert the projections [A] of lower side cover into the grommets [B].
- Tighten the bolt and screw.

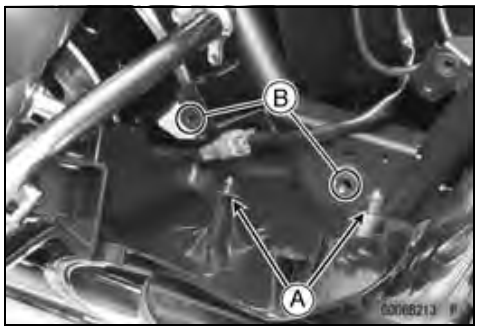

- Insert the projections [A] of upper side cover into the grommets [B].
- Tighten the screw.

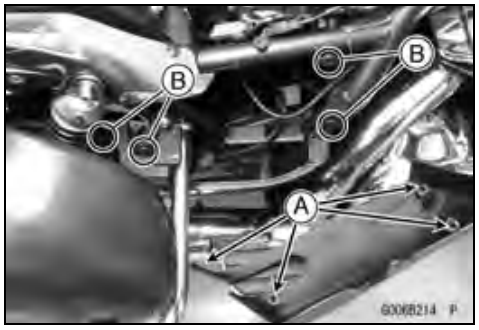

Downloaded from www.vulcanriders-sweden.org

Fenders

CAUTION

Be careful not to scratch the painted surface during removal or installation.

Front Fender Removal

- Remove:
  Front Wheel (see Front Wheel Removal in the Wheels/Tires chapter)
  Front Fender Bolts [A]
  Brake Hose Brackets [B]
  Front Fender [C]

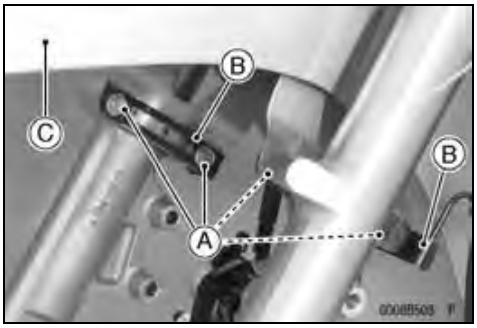

Rear Fender Removal

- Remove:
  Seats (see Front/Rear Seat Removal)
  Saddlebags (see Saddlebag Removal)
  Saddlebag Stays (see Saddlebag Stay Removal)
- Clear the connector [A] from the battery case cover, and disconnect it.



- Clear the clamps [A] from the rear fender.



- Remove:
  Bolts [A]
  Rear Fender Allen Bolts [B] (Both Sides)
  Rear Fender [C]

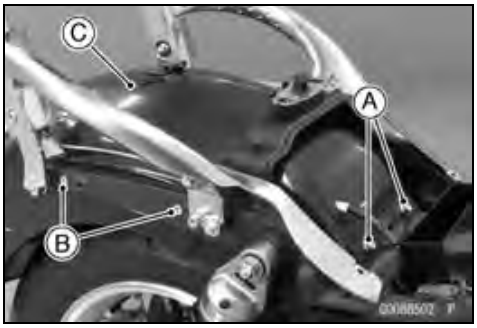

Downloaded from www.vulcanriders-sweden.org

Fenders

Rear Fender Installation

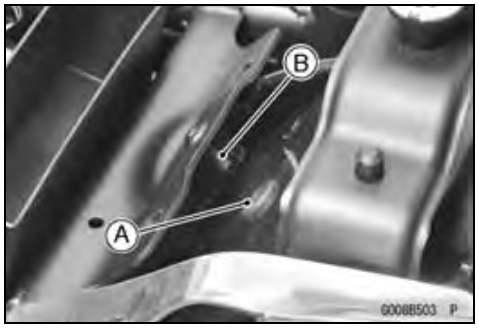

- Install the grommet [A] so that its taper side faces inside.
- Fit the grommet of the rear fender onto the stopper [B].

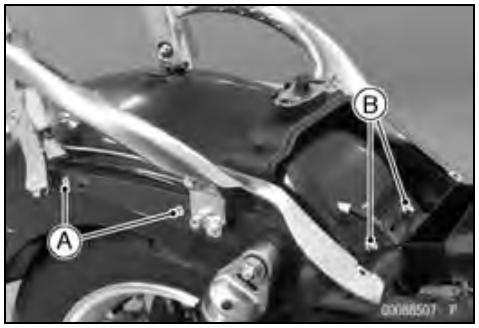

- Tighten:

  Torque - Rear Fender Allen Bolts [A]: 25 N·m (2.5 kgf·m, 18 ft·lb)

- Tighten the bolts [B].

Downloaded from www.vulcanriders-sweden.org

Battery Case

Battery Case Removal

● Remove:
Seats (see Front/Rear Seat Removal)
Rear Fender (see Rear Fender Removal)
Battery (see Battery Removal in the Electrical System chapter)

● Pull the following out from the battery case.
ECU [A]
Turn Signal Control Relay [B]
Fuse Boxes [C]
ETV Actuator Relay [D]
Accessory Relay [E]
Starter Relay [F]
Vehicle-down Sensor (see Vehicle-down Sensor Removal in the Fuel System (DFI) chapter)

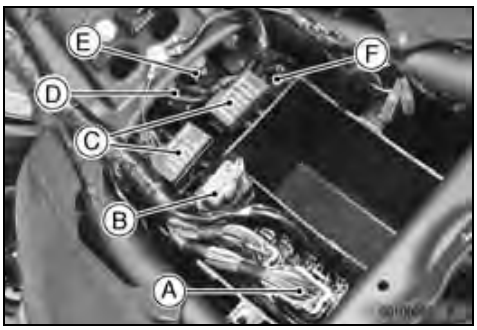

● Open the clamp [A], and free the leads.
● Remove the bolt [B].

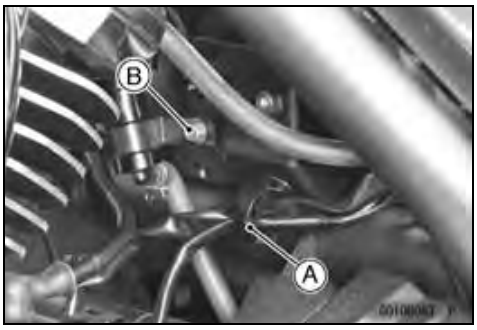

● Remove the battery case bolts [A].
Front [B]

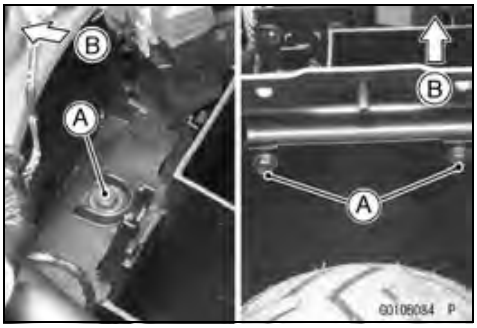

● Remove the battery case [A] upward as shown in the figure.



Battery Case Installation

● Installation is the reverse of removal.

Downloaded from www.vulcanriders-sweden.org

Footboard

Front Footboard Removal/Installation

Left Side

● Remove:
Rear Shift Lever Bolt [A]
Rear Shift Lever [B]

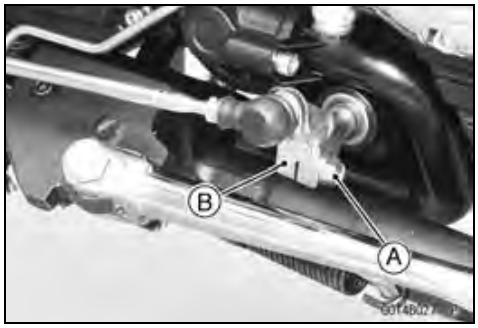

● Remove:
Front Footboard Bracket Bolt [A] (Tighten with Front Guard)
Front Footboard Bracket Bolt [B]
Front Footboard Left [C]

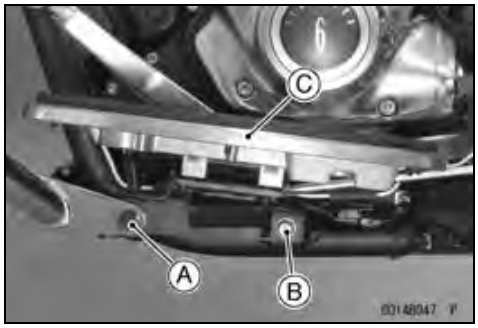

● Installation is the reverse of removal; note the following.
○Align the punch mark [A] on the shift shaft with the punch mark [B] on the rear shift lever.
○Apply a non-permanent locking agent to the front footboard bracket bolts.
● Tighten:

Torque - Front Footboard Bracket Bolt: 34 N·m (3.5 kgf·m, 25 ft·lb)
Shift Lever Bolt: 12 N·m (1.2 kgf·m, 106 in·lb)

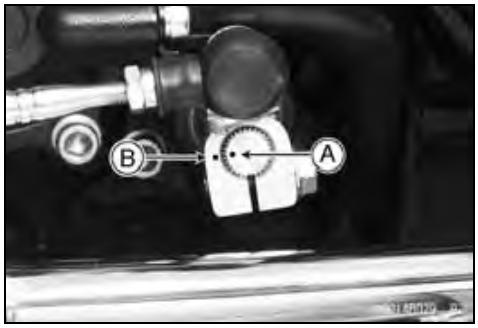

Right Side

● Remove:
Bolt [A] and Rear Brake Reservoir Cover [B]
Bolt [C] and Rear Brake Reservoir [D]

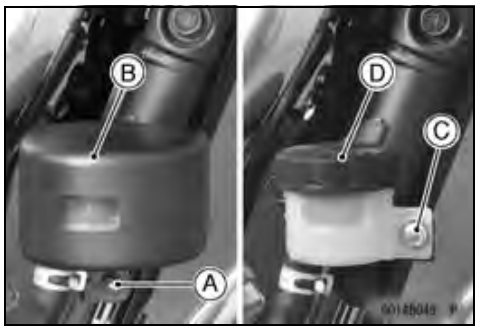

● Remove:
Front Guard Mounting Bolt [A]
Front Footboard Bracket Bolts [B]
Front Footboard Right [C]

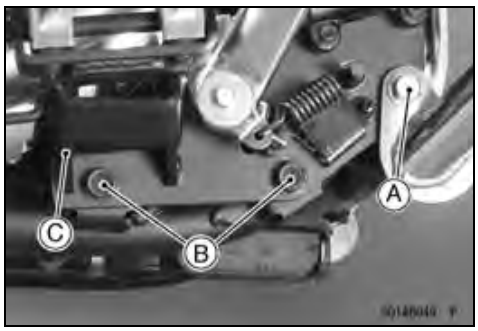

Downloaded from www.vulcanriders-sweden.org

Footboard

- Open the clamp [A], and free the lead.
- Disconnect:
  Rear Brake Light Switch Lead Connector [B]
  Cruise Control Cancel Switch Lead Connector [C]

★If necessary, remove the rear brake master cylinder and brake pedal (see Brake Pedal Removal in the Brakes chapter).

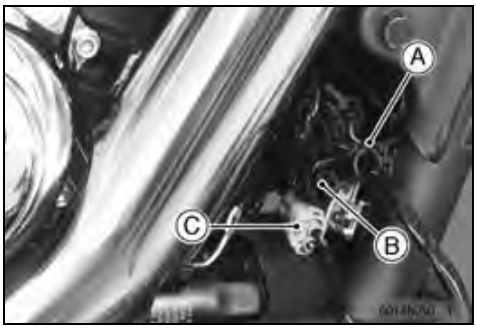

- Installation is the reverse of removal; note the following.
- Tighten:

Torque - Front Footboard Bracket Bolt: 34 N·m (3.5 kgf·m, 25 ft·lb)
Front Guard Mounting Bolt: 25 N·m (2.5 kgf·m, 18 ft·lb)

Front Footboard Disassembly

Left Side

- Remove:
  Front Footboard Left (see Front Footboard Removal/Installation)
  Spring [A]
  Circlip [B]
  Pin [C]

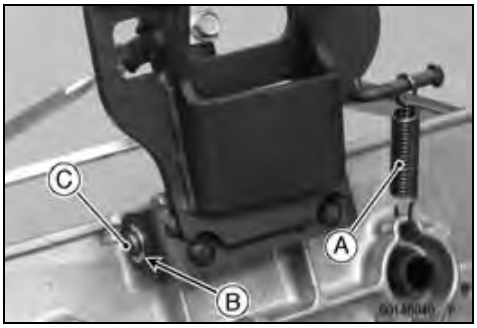

Right Side

- Remove:
  Front Footboard Right (see Front Footboard Removal/Installation)
  Spring [A]
  Circlip [B]
  Pin [C]

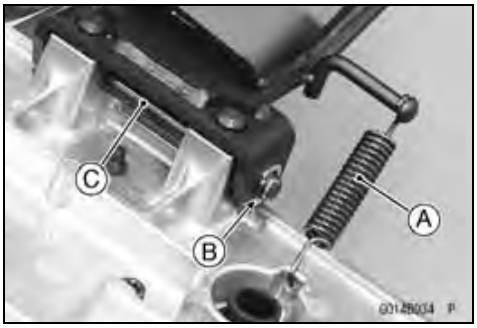

Front Footboard Assembly

- Replace the circlips with new ones.
- Install the following onto the front footboards [A].
  Inner Dampers [B]
  Outer Dampers [C]
  Bank Sensors [D] and Bolts [E]

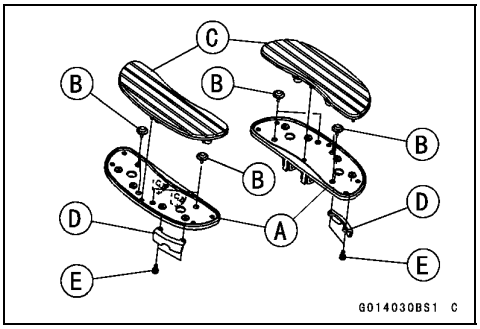

Downloaded from www.vulcanriders-sweden.org

Footboard

● Install the dampers [A] onto the front footboard brackets [B].
● Put the footboards [C] and the brackets together.
○Apply grease to the sliding surface of the front footboards.
○Insert the pins [D] from the front.
○Install the new circlips [E].
● Install the springs [F].
○The direction of springs are as shown in the figure.

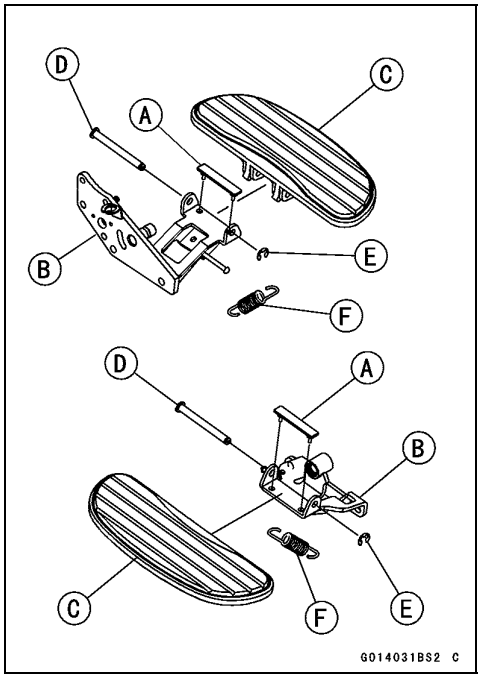

Rear Footboard Removal/Installation

● Remove:
Rear Exhaust Pipe Cover (see Exhaust Pipe Removal in the Engine Top End chapter) (for Right Side)
Rear Footboard Bracket Bolts [A]
Rear Footboard [B]

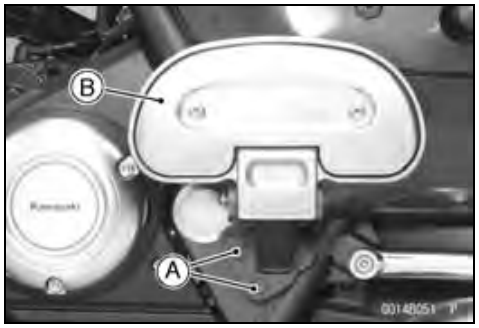

● Tighten:

Torque - Rear Footboard Bracket Bolt: 25 N·m (2.5 kgf·m, 18 ft·lb)

Rear Footboard Disassembly

● Remove:
Rear Footboard (see Rear Footboard Removal/Installation)
Circlip [A]
Pin [B]

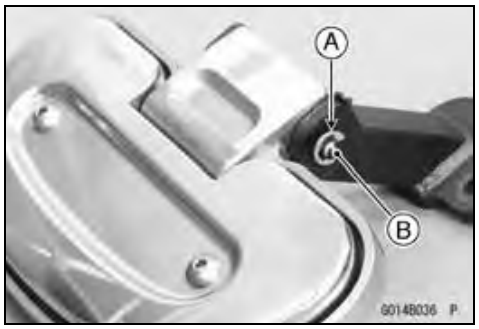

Downloaded from www.vulcanriders-sweden.org

Footboard

Rear Footboard Assembly

- Replace the circlips with new ones.
- Install the following onto the rear footboards [A].
  Inner Dampers [B]
  Outer Dampers [C]
  Rear Footboard Covers [D] and Bolts [E]

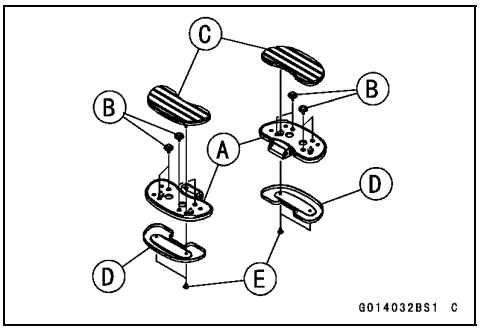

- Install the spring [A] and steel ball [B] into the hole [C] of the footboard.
- Fit the stopper [D] onto the footboard.

○Apply grease to the holes [E].

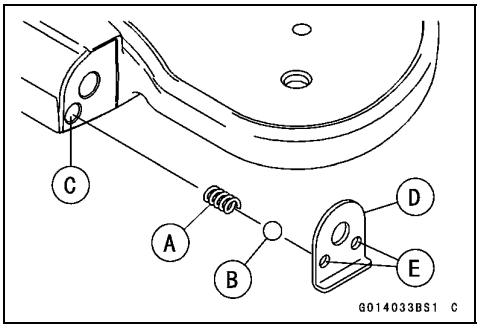

- Install the dampers [A] onto the rear footboard brackets [B].
- Put the footboard assemblies [C] and the bracket together.

○Apply grease to the sliding surface of the rear footboards.
○Insert the pins [D] from the front.
○Install the new circlips [E].

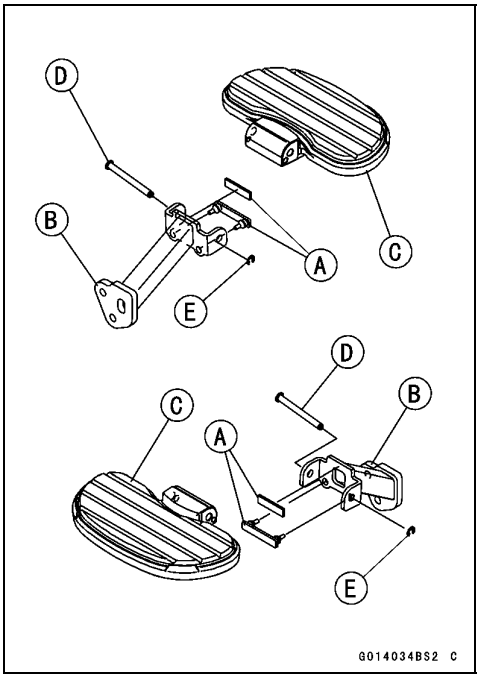

Downloaded from www.vulcanriders-sweden.org

Side Stand

Side Stand Removal

● Raise the rear wheel off the ground using the jack.

Special Tool - Jack: 57001-1238

● Remove:
Side Stand Switch Bolt [A]
Side Stand Switch [B]

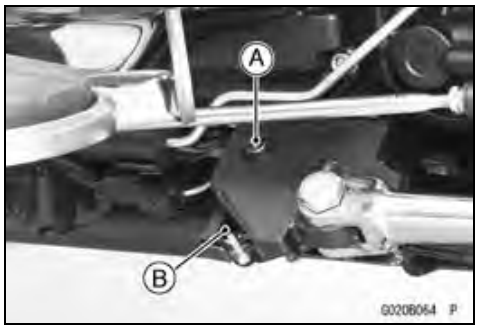

● Remove:
Spring [A]
Side Stand Nut [B]
Side Stand Bolt [C]
Side Stand [D]

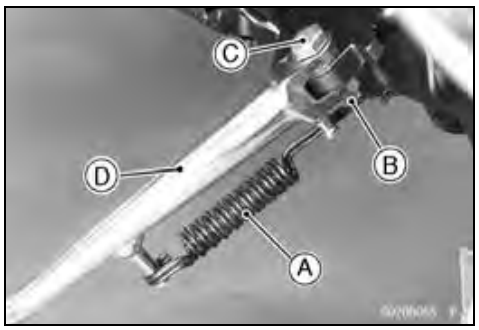

Side Stand Installation

● Replace the sidestand mounting nut [A] with a new one.
● Apply 2-stroke oil to the contact surface of the frame and side stand.
● Install:
Side Stand [B]
Side Stand Mounting Bolt [C] and Nut
● Tighten:

Torque - Side Stand Mounting Nut: 44 N·m (4.5 kgf·m, 32 ft·lb)

● Hook the spring [D] so that face the long spring end upward.
○Install the spring hook direction as shown in the figure.
● Apply a non-permanent locking agent to the side stand switch mounting bolt [E].
● Install the side stand switch [F].

Torque - Side Stand Switch Mounting Bolt: 8.8 N·m (0.90 kgf·m, 78 in·lb)

● Check that the side stand switch mounting bolt is not loosening.

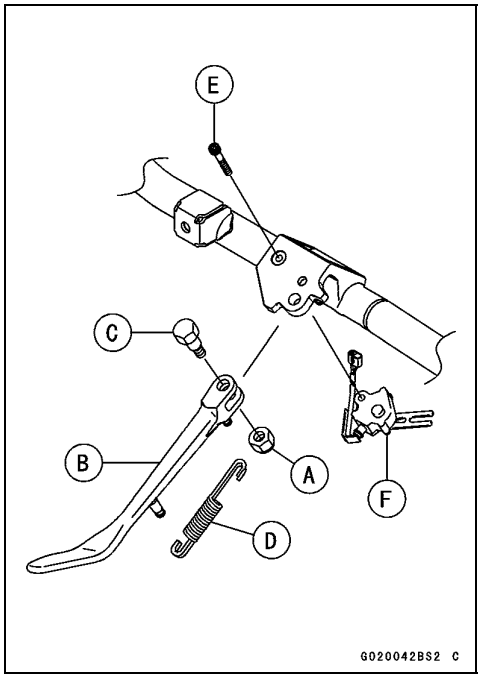

Downloaded from www.vulcanriders-sweden.org

Windshield

Windshield Height Adjustment

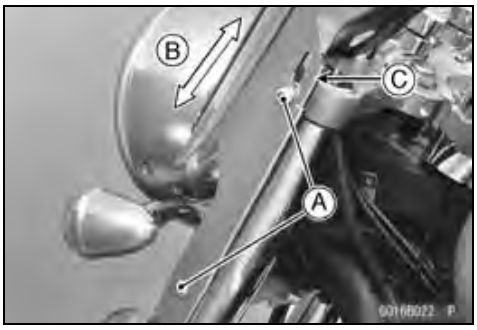

○The windshield can be adjusted within 50 mm (2.0 in.) in height to suit the rider's preference.
- Loosen the windshield bolts [A] on both sides.
- Slide the windshield up or down [B].
- Check to see that the position marks [C] are in the same relative position on both sides.
- Tighten the windshield bolts.

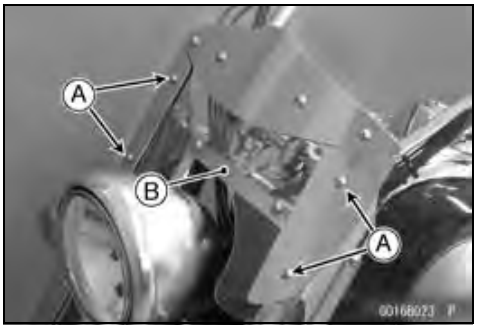

- Loosen the subwindshield bolts [A] on both sides and slide the subwindshield [B] up or down so the clearance is 10 mm (0.4 in.) between the subwindshield lower edge and the headlight body.
- Tighten the subwindshield bolts.

Windshield and Deflector Removal

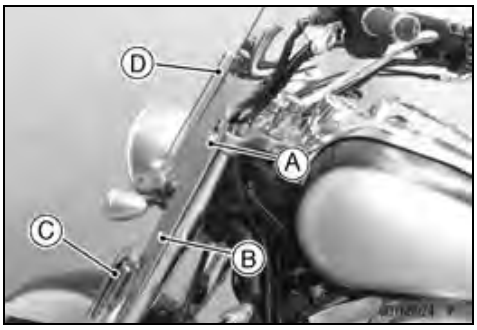

CAUTION
Be careful not to damage the surface of the windshield.

- Remove:
  Bolt and Nut [A] (Both Sides)
  Bolt and Collar [B] (Both Sides)
  Deflector [C] (Both Sides)
  Windshield [D]

○Take care not to drop the windshield and the deflectors.

Windshield and Deflector Installation

CAUTION
Be careful not to damage the surface of the windshield.

- Installation is the reverse of removal; note the following.

○Adjust the windshield height after installation (see Windshield Height Adjustment).

Windshield Assembly

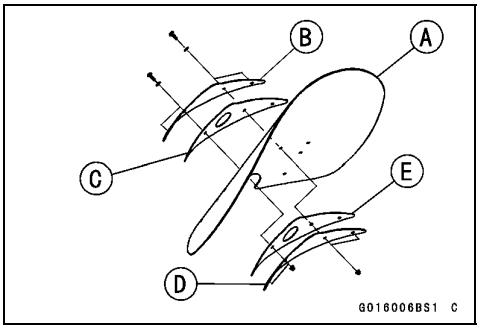

CAUTION
Be careful not to damage the surface of the windshield.

- Install the following with the bolts and nuts to the windshield [A].
  Outer Center Plate [B] and Damper [C]
  Inner Center Plate [D] and Damper [E]

Downloaded from www.vulcanriders-sweden.org

Windshield

- Install the following with the bolts and nuts to the windshield.
  Outer Side Plates [A] and Dampers [B]
  Dampers (D = 50 mm (2.0 in.)) [C]
  Subwindshield [D]
  Dampers (D = 35 mm (1.4 in.)) [E]
  Windshield Stays [F]
- ○The outer side plates and windshield stays has an **L** or **R** mark on its back.
- ○First, tighten all the bolts and nuts to a snug fit, and finally tighten them evenly.
- ○Pull the subwindshield all the way up.
- For EUR model, install the trim onto around the windshield.

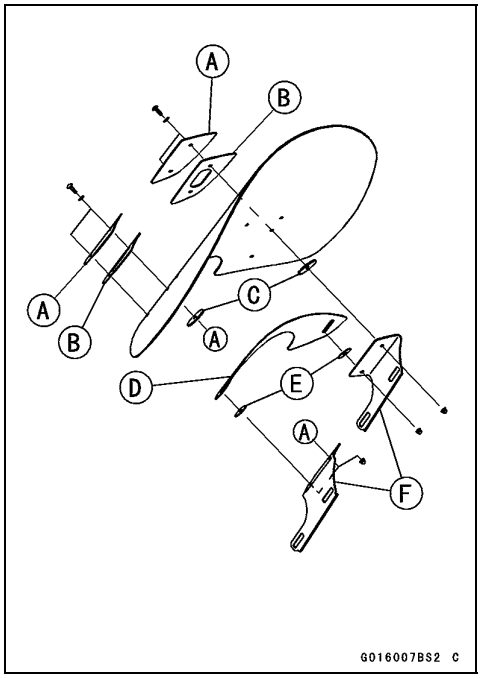

Deflector Assembly

- Assemble the following with the bolts [A] and nuts [B].
  Left Deflector Stay [C]
  Right Deflector Stay [D]
  Left Deflector [E]
  Right Deflector [F]
  Dampers [G]
  Left Deflector Bracket [H]
  Right Deflector Bracket [I]
  Washers [J]

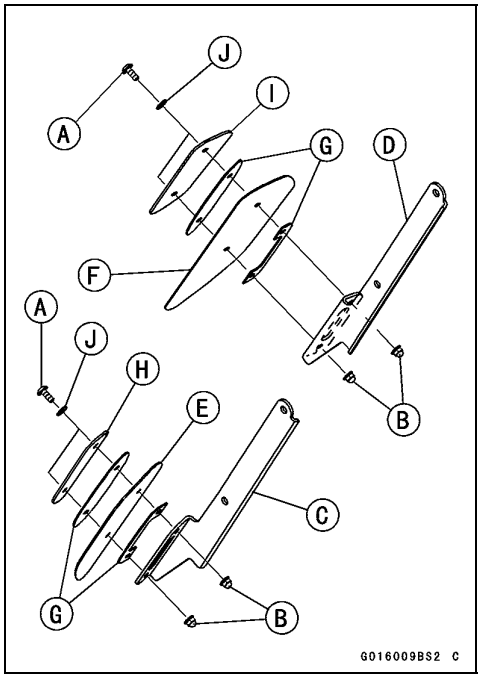

Downloaded from www.vulcanriders-sweden.org

Saddlebags

Saddlebag Lid Unlocking

- Insert the ignition key into the lid lock [A], and turn it counterclockwise.
- Take hold of the knob [B], and open the lid.



Saddlebag Lid Locking

- Close the lid until lock with a click.
- Insert the ignition key into the lid lock [A], and turn it clockwise.
- Take hold of the knob [B] to check the locking condition.



Saddlebag Removal

- Open the lid.
- Remove the bolts [A].
- Close the lid.

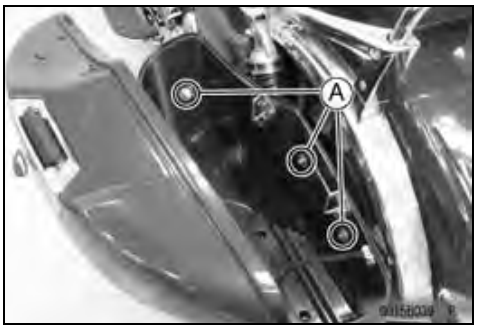

- Remove the saddlebag from the saddlebag stay.

○Clear the bottom stoppers [A] and the side hook [B].

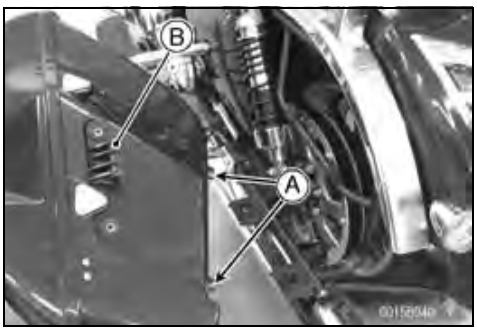

Saddlebag Installation

- Install the rubber dampers [A].

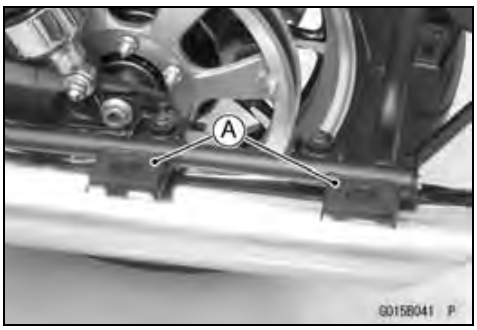

Downloaded from www.vulcanriders-sweden.org

Saddlebags

● Install the saddlebag onto the saddlebag stay.
○Fit the side hook [A] and the bottom stoppers [B] to the saddlebag stay.

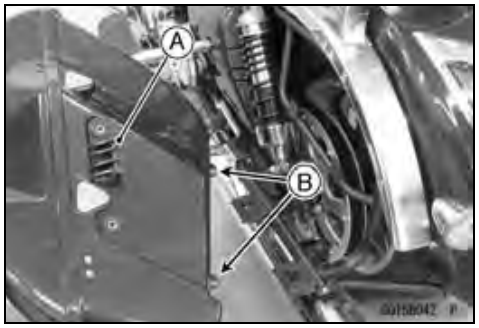

Saddlebag Stay Removal

● Remove:
Seats (see Front/Rear Seat Removal)
Saddlebag (see Saddlebag Removal)
● Remove the bolts [A], and take off the cross bar [B].

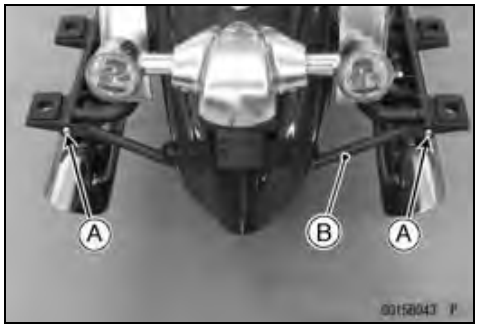

● Remove:
Screw [A]
Bolts [B]
Rear Fender Cover Front [C]

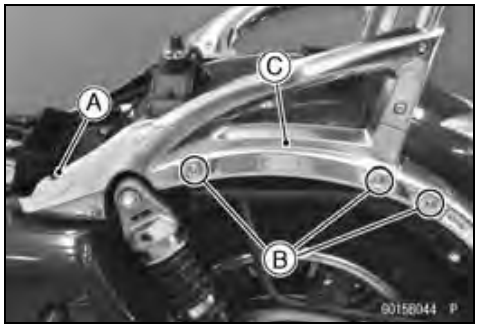

● Remove:
Bolt [A]
Rear Fender Cover Rear [B]

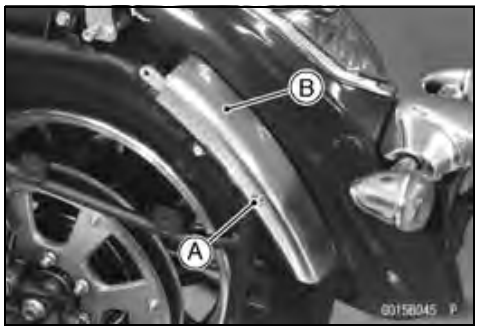

● Remove:
Muffler Mounting Bolts [A]
Saddlebag Stay Bolts [B]
Saddlebag Stay [C]

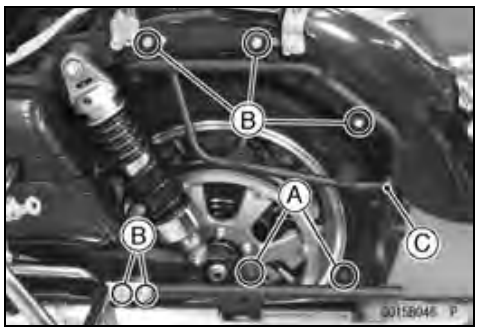

Downloaded from www.vulcanriders-sweden.org

Saddlebags

Saddlebag Stay Installation

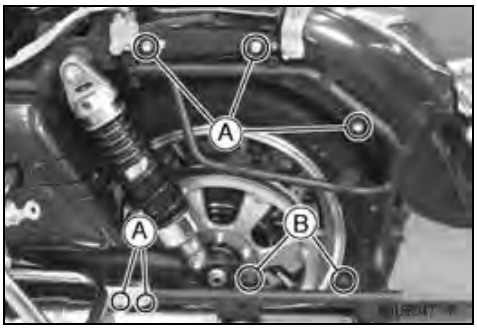

● Installation is the reverse of removal; note the following.

○Tighten:

Torque - Saddlebag Stay Bolts [A]: 25 N·m (2.5 kgf·m, 18 ft·lb)
Muffler Mounting Bolts [B]: 25 N·m (2.5 kgf·m, 18 ft·lb)
Cross Bar Mounting Bolts: 25 N·m (2.5 kgf·m, 18 ft·lb)

Downloaded from www.vulcanriders-sweden.org

Guards

Front Guard Removal/Installation

Left Side



- Remove:
  Front Guard Mounting Bolt [A]
  Front Footboard Bracket Bolt [B]
  Left Front Guard [C]
- Apply a non-permanent locking agent to the front footboard bracket bolt.
- Tighten:

Torque - Front Footboard Bracket Bolt: 34 N·m (3.5 kgf·m, 25 ft·lb)
Front Guard Mounting Bolt: 34 N·m (3.5 kgf·m, 25 ft·lb)

Right Side

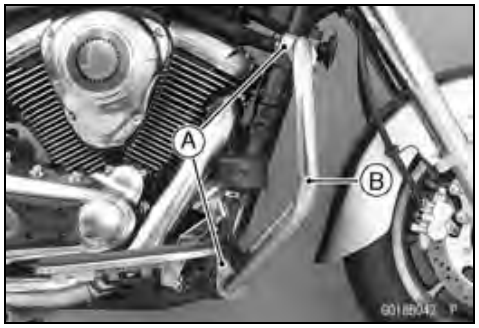

- Remove:
  Front Guard Mounting Bolts [A]
  Right Front Guard [B]
- Tighten:

Torque - Front Guard Mounting Bolts: 34 N·m (3.5 kgf·m, 25 ft·lb)

Rear Guard Removal/Installation

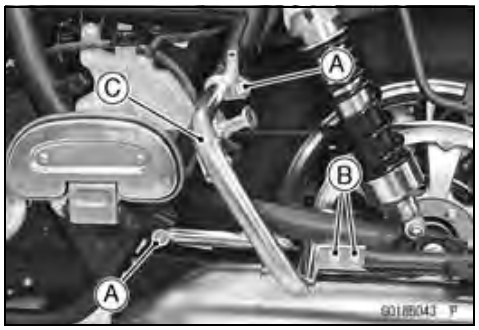

- Remove:
  Side Cover (see Side Cover Removal)
  Saddlebag (see Saddlebag Removal)
  Rear Guard Mounting Bolts [A]
  Saddlebag Stay Bolts [B]
  Rear Guard [C]
- Tighten:

Torque - Saddlebag Stay Bolts: 25 N·m (2.5 kgf·m, 18 ft·lb)
Rear Guard Mounting Bolts: 25 N·m (2.5 kgf·m, 18 ft·lb)

Downloaded from www.vulcanriders-sweden.org

Rear View Mirrors

Rear View Mirror Removal (Other than EUR and SEA Models)

- Remove the bolt [A] and nut on both sides.
- Tilt the windshield [B] forward.

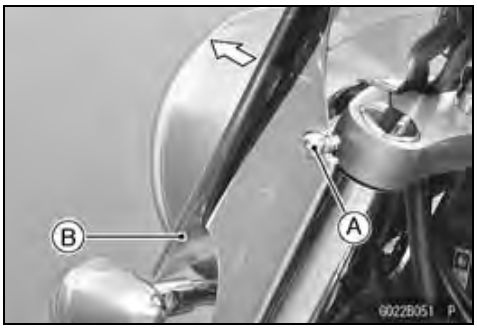

- Loosen the locknut [A].
- Turn the rear view mirror stay [B] counterclockwise to remove the rear view mirror from the holder [C].

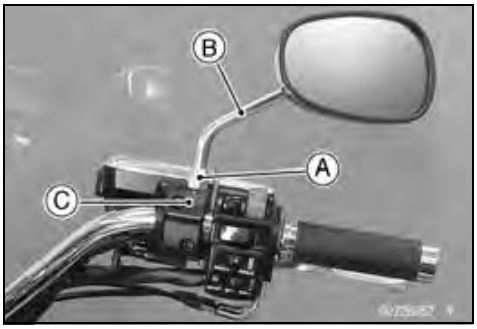

Rear View Mirror Installation (Other than EUR and SEA Models)

- Loosen the locknut all the way up.
- Screw the mounting area of the rear view mirror [A] into the holder [B] all the way, then back it two turns out.
- Turn the stay to assure visibility to the rear with the rider sitting on the motorcycle, and tighten the locknut [C] securely.
- Adjust the rear view mirror by slightly moving only the mirror portion of the assembly.

○Installation and adjustment of the left side are common with the those of right side. Follow the procedure specified at the right side.

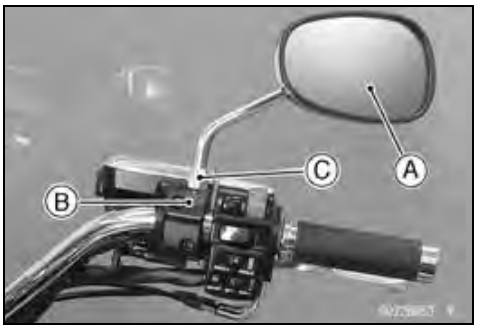

Rear View Mirror Removal (EUR and SEA Models)

- Remove the bolt [A] and nut on both sides.
- Tilt the windshield [B] forward.

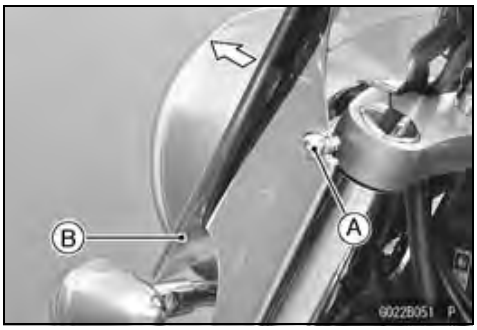

Downloaded from www.vulcanriders-sweden.org

Rear View Mirrors

- Loosen the lower hexagonal area [A].
- Turn the rear view mirror stay [B] counterclockwise to remove the rear view mirror from the holder [C].

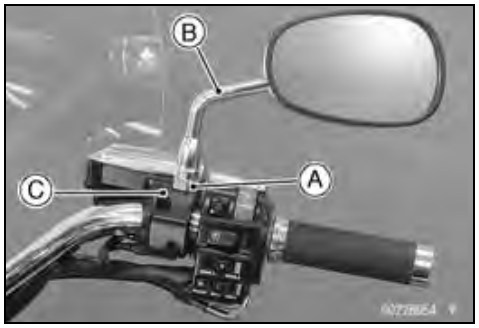

CAUTION

Do not force to tighten and/or loosen the upper hexagonal area (adapter) [A] with a pair of spanners or wrench. Disassembly of this area is not possible. Non-permanent locking agent [B] is already applied to the threads of this inner area. Forcible loosening may damage the adapter and/or the turning mechanism of the stay [C].

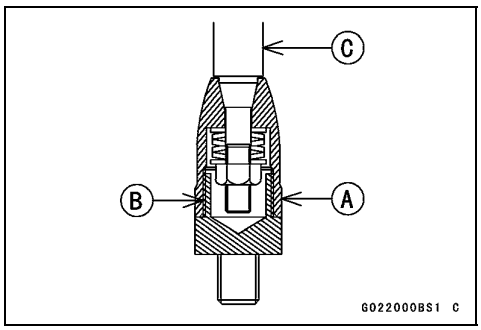

Rear View Mirror Installation (EUR and SEA Models)

- Screw the mounting area of the rear view mirror [A] into the holder [B] all the way, and tighten the lower hexagonal area [C] securely.

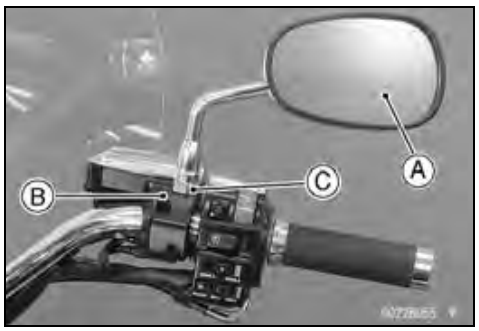

CAUTION

Do not force to tighten and/or loosen the upper hexagonal area (adapter) [A] with a pair of spanners or wrench. Disassembly of this area is not possible. Non-permanent locking agent [B] is already applied to the threads of this inner area. Forcible loosening may damage the adapter and/or the turning mechanism of the stay [C].

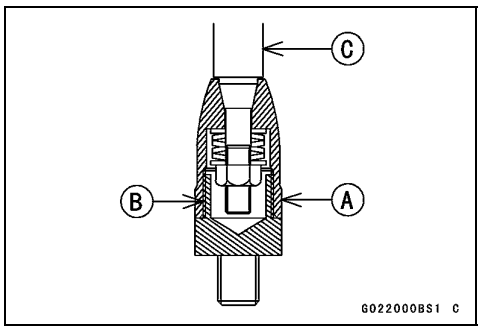

- Turn the stay [A] to assure visibility to the rear with the rider sitting on the motorcycle.
- Adjust the rear view mirror [B] by slightly moving only the mirror portion of the assembly.

○Installation and adjustment of the left side are common with the those of right side. Follow the procedure specified at the right side.

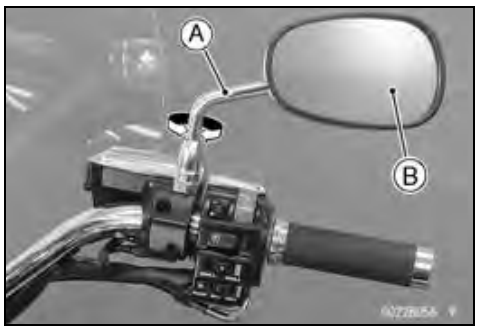

Downloaded from www.vulcanriders-sweden.org

Downtube

Downtube Removal

● Raise the rear wheel off the ground using the jack.

Special Tool - Jack: 57001-1238

● Remove:
Right Front Guard (see Front Guard Removal/Installation)
Front Footboard Right (see Front Footboard Removal/Installation)
Exhaust Pipes (see Exhaust Pipe Removal in the Engine Top End chapter)

● Support the engine with a commercially available stand [A].
● Remove:
Engine Bracket Bolts [B]
Cross Pipe Bolt [C]
Downtube Bolts [D]

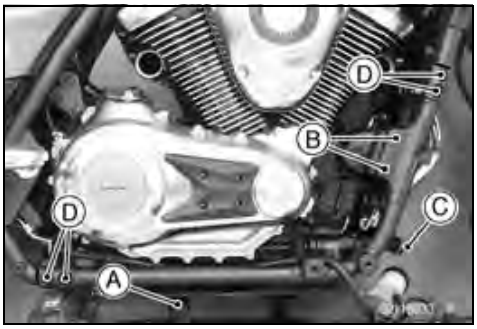

● Open the clamps [A] to free the brake hose [B].
● Remove the downtube [C].

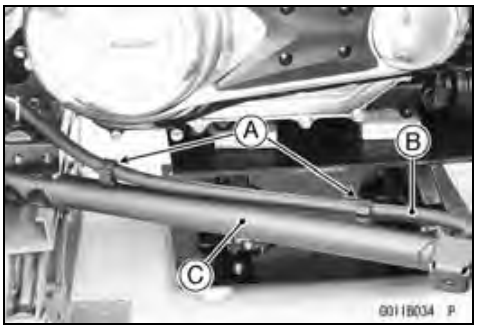

Downtube Installation

● Installation is the reverse of removal; note the following.
○When installing the downtube, run the brake hose [A] on the downtube [B].
● Tighten:

Torque - Engine Bracket Bolts: 44 N·m (4.5 kgf·m, 32 ft·lb)
Cross Pipe Bolt: 34 N·m (3.5 kgf·m, 25 ft·lb)
Downtube Bolts: 59 N·m (6.0 kgf·m, 44 ft·lb)

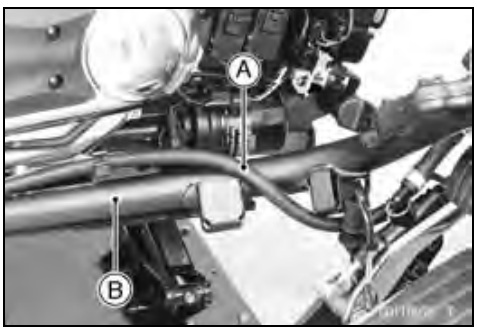

Downloaded from www.vulcanriders-sweden.org

Tandem Grip

Tandem Grip Removal

- Remove:
  Seats (see Front/Rear Seat Removal)
  Saddlebags (see Saddlebag Removal)

- Remove the screw [A] and bolts [B], and take off the rear fender cover front [C] (Both Sides).

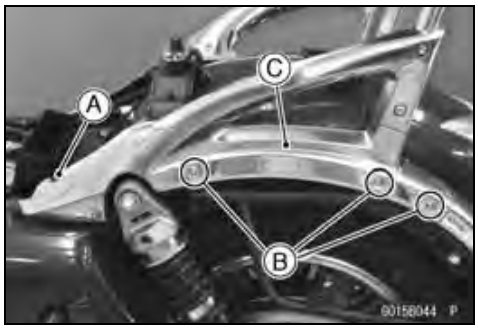

- Remove the bolts [A], and take off the tandem grip inner cover [B] (Both Sides).

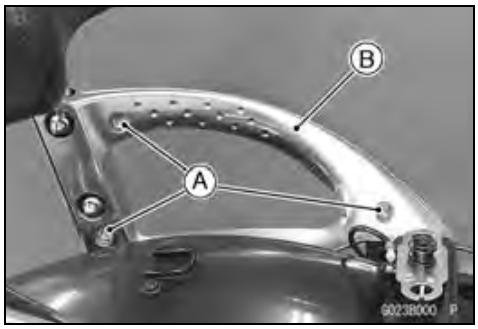

- Remove:
  Bolts and Nuts [A]
  Backrest [B]

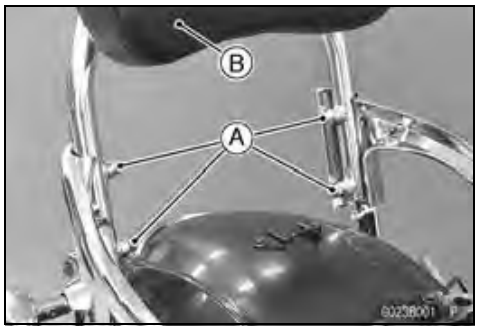

- Remove:
  Bolts [A]
  Tandem Grip [B]

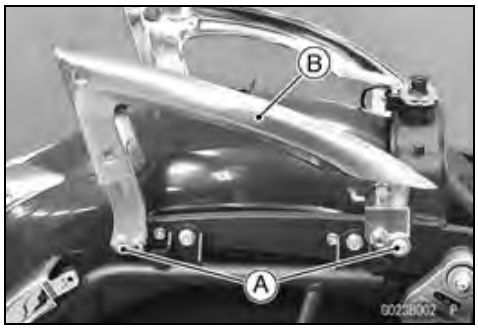

Tandem Grip Installation

- Installation is the reverse of removal.

Downloaded from www.vulcanriders-sweden.org

Frame

Frame Inspection

● Visually inspect the frame [A] for cracks, dents, bending, or warp.

★If there is any damage to the frame, replace it.

⚠ WARNING

A repaired frame may fail in use, possibly causing an accident. If the frame is bent, dented, cracked, or warped, replace it.

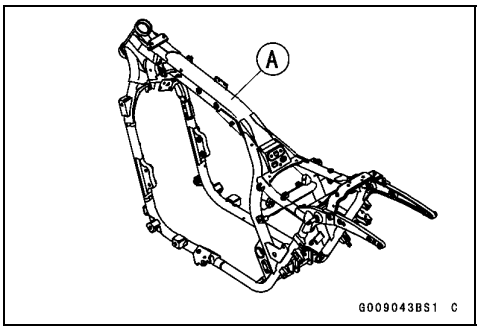

Downloaded from www.vulcanriders-sweden.org

Electrical System

Table of Contents

Exploded View 16-4
Specifications 16-10
Special Tools and Sealant 16-11
Electrical Parts Location 16-12
Wiring Diagram 16-14
Servicing Precautions 16-18
Electrical Wiring 16-19
  Wiring Inspection 16-19
Battery 16-20
  Battery Removal 16-20
  Battery Installation 16-20
  Battery Activation 16-21
  Precautions 16-23
  Interchange 16-24
  Charging Condition Inspection 16-24
  Refreshing Charge 16-24
Charging System 16-26
  Alternator Cover Removal 16-26
  Alternator Cover Installation 16-27
  Alternator Stator Coil Removal 16-28
  Alternator Stator Coil Installation 16-29
  Alternator Rotor Removal 16-29
  Alternator Rotor Installation 16-29
  Charging Voltage Inspection 16-30
  Alternator Inspection 16-30
  Regulator/Rectifier Removal 16-32
  Regulator/Rectifier Installation 16-32
  Regulator/Rectifier Inspection 16-33
Ignition System 16-35
  Ignition Coil Removal 16-35
  Ignition Coil Installation 16-36
  Ignition Coil Inspection 16-36
  Spark Plug Removal 16-37
  Spark Plug Installation 16-37
  Spark Plug Condition Inspection 16-37
  Ignition Coil Primary Peak Voltage 16-38
  Crankshaft Sensor Removal 16-39
  Crankshaft Sensor Installation 16-39
  Crankshaft Sensor Inspection 16-39
  Crankshaft Sensor Peak Voltage Inspection 16-40
  Interlock Operation Inspection 16-40
  IC Igniter Inspection 16-41
Starter Motor 16-44
  Starter Motor Removal 16-44
  Starter Motor Installation 16-44
  Starter Motor Disassembly 16-45
  Starter Motor Assembly 16-45
  Brush Inspection 16-47
  Commutator Cleaning and Inspection 16-47
  Armature Inspection 16-47
  Brush Lead Inspection 16-48
  Right-hand End Cover Inspection 16-48
  Starter Relay Inspection 16-48
Lighting System 16-50
  Headlight Beam Horizontal Adjustment 16-50
  Headlight Beam Vertical Adjustment 16-50
  Headlight Bulb Replacement 16-50
  Headlight Body Removal 16-51
  City Light Bulb Replacement (EUR Models) 16-52
  Tail/Brake Light (LED) Removal 16-52
  Tail/Brake Light (LED) Installation 16-52
  Licence Plate Light Bulb Replacemrnt 16-53
Automatic Turn Signal Canceling System 16-55
  Turn Signal Control Relay Inspection 16-55
  Distance Sensor System Inspection 16-56
  Turn Signal Light Bulb Replacement 16-56
Air Switching Valve 16-60
  Air Switching Valve Operation Test 16-60
  Air Switching Valve Unit Test 16-60
Radiator Fan System 16-62
  Fan System Circuit Inspection 16-62
  Fan Motor Inspection 16-62
Meter, Gauge 16-64
  Meter Unit Removal 16-64
  Meter Unit Installation 16-64
  Meter Unit Disassembly 16-64
  Meter Operation Inspection 16-65
  Can Communication Item Inspection 16-69
  Meter Unit Inspection 16-72
Cruise Control System Switches 16-79
  Cruise Control System Switch Inspection 16-79
Switch and Sensors 16-84
  Fuel Level Sensor Inspection 16-84
  Water Temperature Sensor Inspection 16-84
  Speed Sensor Removal 16-85

Downloaded from www.vulcanriders-sweden.org

Speed Sensor Installation 16-85
Speed Sensor Inspection 16-85
Oxygen Sensor Removal (Equipped Models) 16-85
Oxygen Sensor Installation (Equipped Models) 16-85
Oxygen Sensor Inspection (Equipped Models) 16-85
Oxygen Sensor Heater Inspection (Equipped Models) 16-86
Gear Position Switch Removal 16-86
Gear Position Switch Installation . 16-86
Gear Position Switch Inspection .. 16-86
Front Brake Light Switch Inspection 16-87
Rear Brake Light Switch Check/Adjustment 16-87
Switch Inspection 16-88
Relay Box 16-89
Relay Box Removal 16-89
Relay Box Installation 16-89
Relay Circuit Inspection 16-89
Diode Circuit Inspection 16-90
Accessory Relay Inspection 16-91
Fuse 16-92
30 A Main Fuse Removal 16-92
Fuse Box Fuse Removal 16-92
Fuse Installation 16-92
Fuse Inspection 16-93

Downloaded from www.vulcanriders-sweden.org

Dummy Page

Downloaded from www.vulcanriders-sweden.org

Exploded View

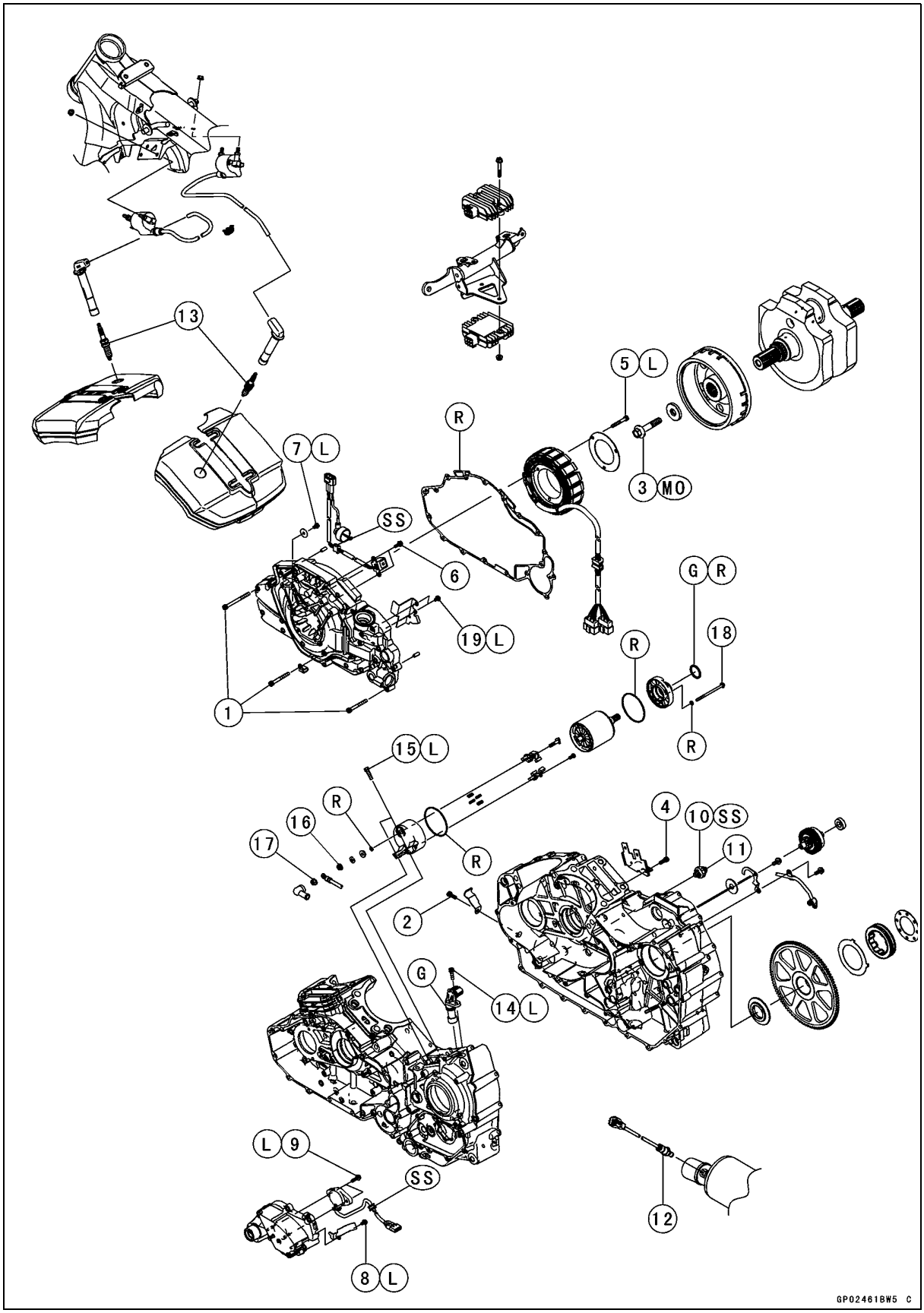

Downloaded from www.vulcanriders-sweden.org

Exploded View

No.	Fastener	Torque			Remarks
		N·m	kgf·m	ft·lb	
1	Alternator Cover Bolts	12	1.2	106 in·lb	
2	Alternator Harness Clamp Bolt	9.8	1.0	87 in·lb	
3	Alternator Rotor Bolt	150	15.3	111	MO
4	Alternator Stator Coil Lead Connector Stay Bolt	9.8	1.0	87 in·lb	
5	Alternator Stator Coil Mounting Bolts	12	1.2	106 in·lb	L
6	Crankshaft Sensor Bolts	5.9	0.60	52 in·lb	
7	Crankshaft Sensor Lead Holding Plate Bolt	5.9	0.60	52 in·lb	L
8	Gear Position Switch Lead Holding Plate Bolt	4.9	0.50	43 in·lb	L
9	Gear Position Switch Bolts	3.9	0.40	35 in·lb	L
10	Oil Pressure Switch	15.0	1.5	11	SS
11	Oil Pressure Switch Terminal Bolt	-	-	-	Hand -tighten
12	Oxygen Sensor (Equipped Models)	25	2.5	18	
13	Spark Plugs	18.0	1.8	13	
14	Speed Sensor Mounting Bolt	9.8	1.0	87 in·lb	L
15	Starter Motor Mounting Bolts	9.8	1.0	87 in·lb	L
16	Starter Motor Terminal Locknut	11	1.1	97 in·lb	
17	Starter Motor Terminal Nut	5.9	0.60	52 in·lb	
18	Starter Motor Through Bolts	5.0	0.51	44 in·lb	
19	Stator Lead Holding Plate Bolts	5.9	0.60	52 in·lb	L

G: Apply grease.
L: Apply a non-permanent locking agent.
MO: Apply Molybdenum disulfide oil solution.
(mixture of the engine oil and molybdenum disulfide grease in a weight ratio 10:1)
R: Replacement Parts
SS: Apply silicone sealant.

Downloaded from www.vulcanriders-sweden.org

Exploded View

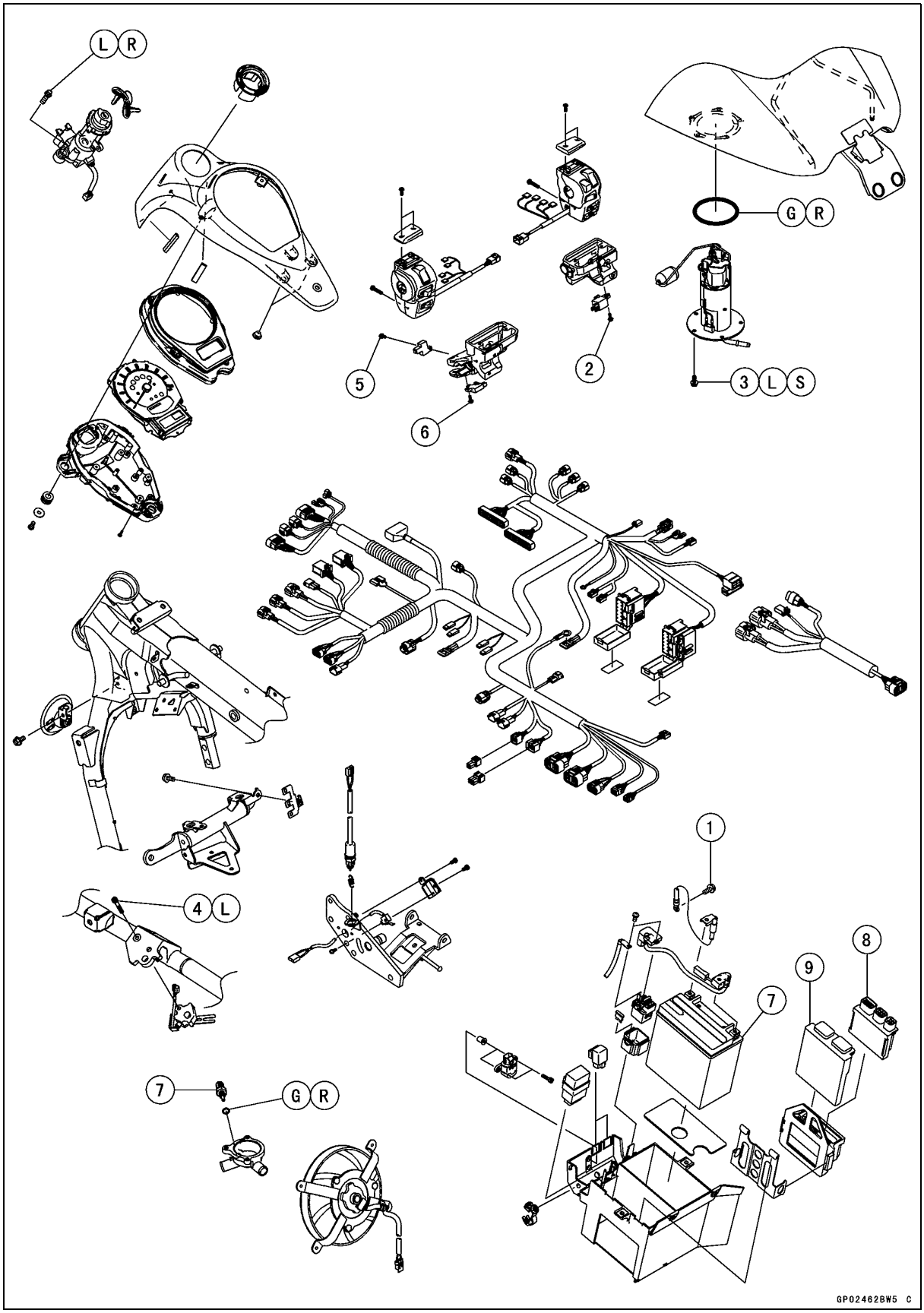

Downloaded from www.vulcanriders-sweden.org

Exploded View

No.	Fastener	Torque			Remarks
		N·m	kgf·m	ft·lb	
1	Engine Ground Mounting Bolt	9.8	1.0	87 in·lb	
2	Front Brake Light Switch Screw	1.2	0.12	11 in·lb	
3	Fuel Pump Bolts	9.8	1.0	87 in·lb	L, S
4	Sidestand Switch Mounting Bolt	8.8	0.90	78 in·lb	L
5	Starter Lockout Switch Screw	1.2	0.12	11 in·lb	
6	Cruise Control Cancel Switch (Clutch) Screw	1.2	0.12	11 in·lb	
7	Water Temperature Sensor	12	1.2	106 in·lb	

8. Battery 12 V 18 Ah
9. Relay Box
10. ECU

G: Apply grease.
L: Apply a non-permanent locking agent.
R: Replacement Parts
S: Follow the specified tightening sequence.

Downloaded from www.vulcanriders-sweden.org

Exploded View

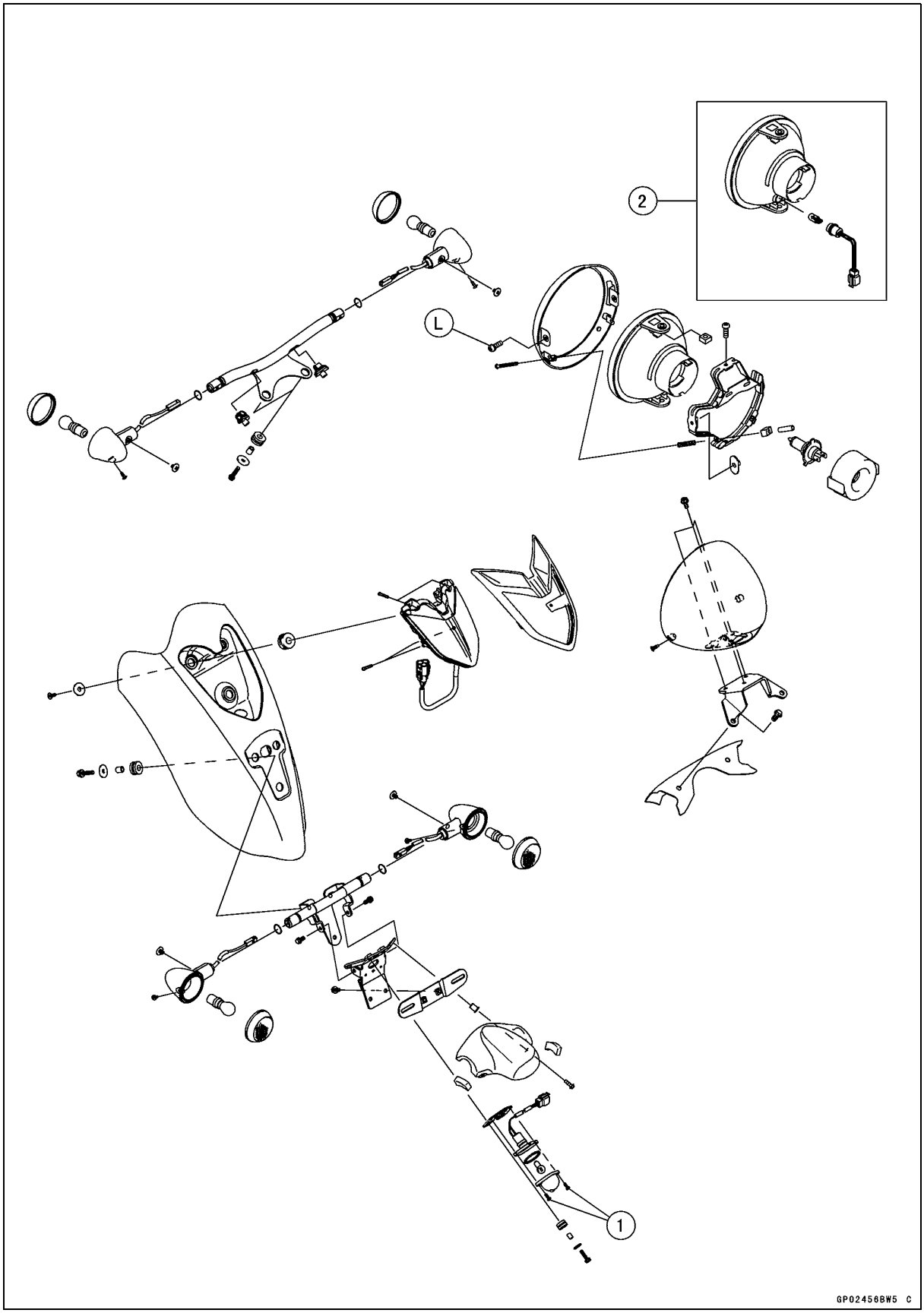

Downloaded from www.vulcanriders-sweden.org

Exploded View

No.	Fastener	Torque			Remarks
		N·m	kgf·m	ft·lb	
1	Licence Plate Light Lens Screws	0.9	0.09	8 in·lb	

2. EUR Models
L: Apply a non-permanent locking agent.

Downloaded from www.vulcanriders-sweden.org

Specifications

Item	Standard
Battery	
Type	Sealed Battery
Model Name	FTZ16-BS
Capacity	12 V 18 Ah
Voltage	12.6 V or more
Charging System	
Alternator Type	Three-phase AC
Battery Charging Voltage	14.0 ~ 15.0 V at 5 000 r/min (rpm)
Alternator Output Voltage (No Load)	76 V or more at 4 000 r/min (rpm)
Stator Coil Resistance	0.23 ~ 0.28 Ω at 20°C (68°F)
Regulator/Rectifier Resistance	in the text
Ignition System	
Ignition Coil:	
3 Needle Arcing Distance	6 mm (0.24 in.) or more
Primary Winding Resistance	1.8 ~ 2.7 Ω
Secondary Winding Resistance	10.4 ~ 15.6 kΩ
Primary Peak Voltage	230 V or more
Spark Plug:	
Type	NGK ILZKAR7B11
Gap	1.0 ~ 1.1 mm (0.039 ~ 0.043 in.)
Crankshaft Sensor:	
Peak Voltage	4 V or more
Crankshaft Sensor Resistance	376 ~ 564 Ω
Electric Starter System	
Starter Motor:	
Brush Length	12 mm (0.47 in.) (Service limit 6.5 mm, 0.26 in.)
Air Switching Valve	
Resistance	18 ~ 22 Ω at 20°C (68°F)
Meter, Gauge	
CAN Communication Line Resistance (at Meter Unit)	122 ~ 126 Ω
Switch And Sensor	
Fuel Level Sensor Resistance:	
Full Position	9 ~ 11 Ω
Empty Position	213 ~ 219 Ω
Rear Brake Light Switch Timing	ON after about 10 mm (0.4 in.) pedal travel
Engine Oil Pressure Switch Connections	When engine is stopped: ON When engine is running: OFF
Water Temperature Sensor Resistance	in the text
Gear Position Switch Resistance	in the text

Downloaded from www.vulcanriders-sweden.org

Special Tools and Sealant

Jack:
57001-1238

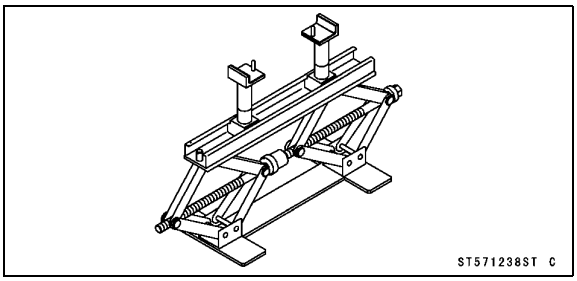

Grip:
57001-1591

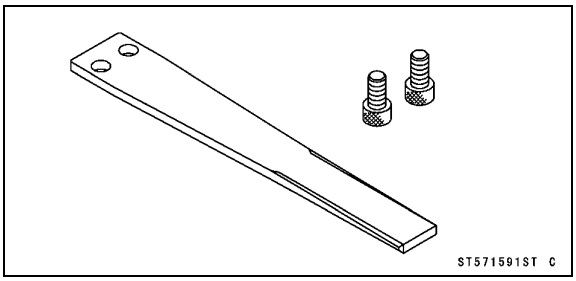

Hand Tester:
57001-1394

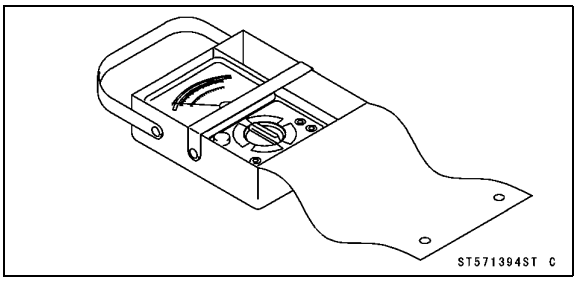

Rotor Holder:
57001-1726

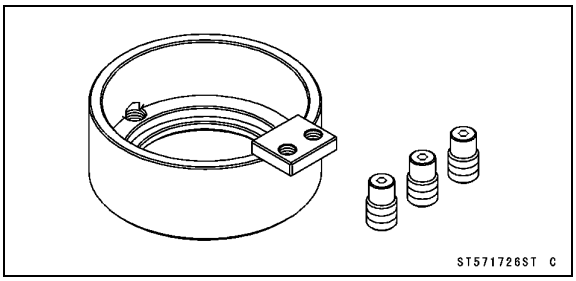

Peak Voltage Adapter:
57001-1415

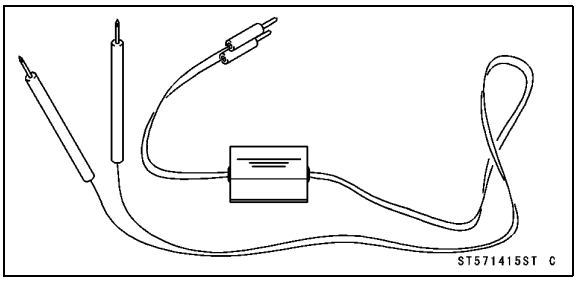

Kawasaki Bond (Silicone Sealant):
92104-0004

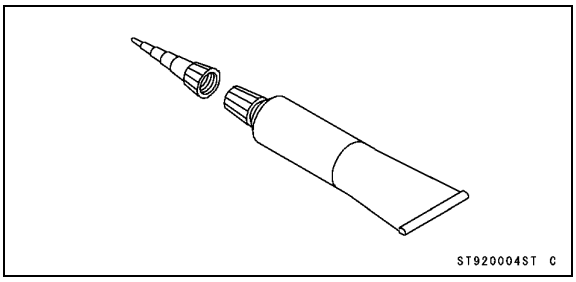

Needle Adapter Set:
57001-1457

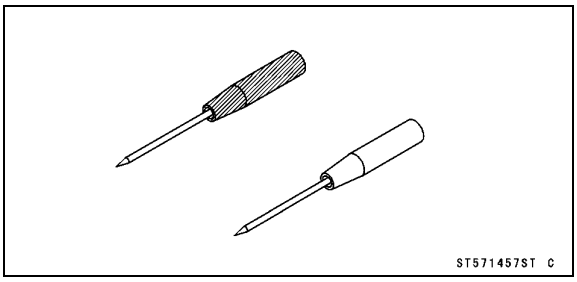

Downloaded from www.vulcanriders-sweden.org

Electrical Parts Location

Fuel Pump and Fuel Level Sensor [A]
Speed Sensor [B]
Crankshaft Sensor [C]
Alternator [D]
Gear Position Switch [E]
Sidestand Switch [F]

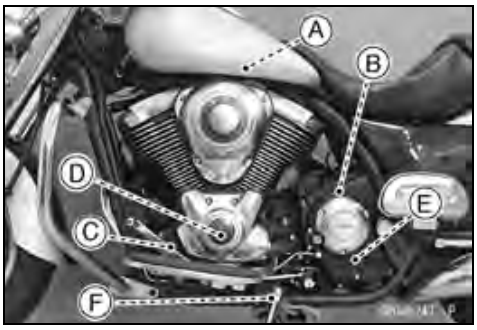

Meter Unit [A]
Ignition Switch [B]
Meter Unit Switch [C]
Cruise Control ON/OFF Button [D]
Cruise Control Switch [E]

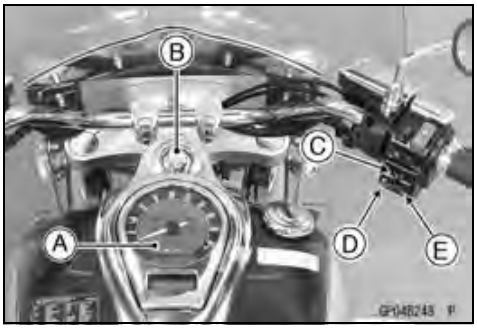

Oil Pressure Switch [A]
Rear Brake Light Switch [B]
Cruise Control Cancel Switch (Rear Brake) [C]
Regulator/Rectifiers [D]

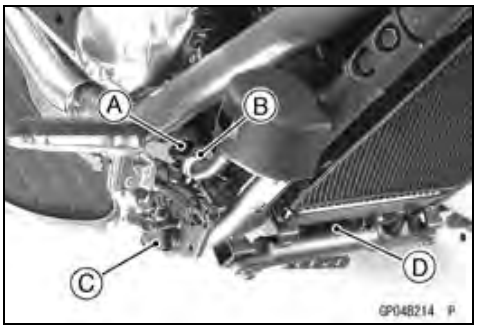

Engine Ground [A]
Water Temperature Sensor [B]
Ignition Coil #2 (Rear Cylinder) [C]
Spark Plug (Front Cylinder) [D]
Oxygen Sensor (Equipped Models) [E]

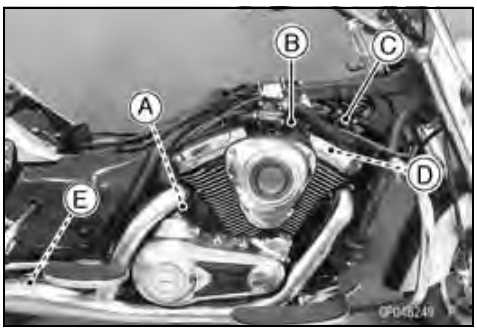

Frame Ground [A]
Air Switching Valve [B]
Spark Plug (Rear Cylinder) [C]
Starter Motor [D]
Ignition Coil #1 (Front Cylinder) [E]
Fan Motor [F]



Downloaded from www.vulcanriders-sweden.org

Electrical Parts Location

Front Brake Light Switch [A]
Cruise Control Cancel Switch (Front Brake) [B]

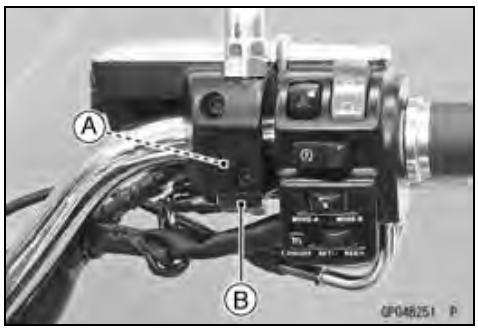

Starter Lockout Switch [A]
Cruise Control Cancel Switch (Clutch) [B]

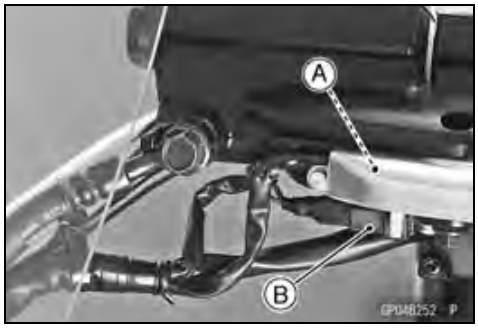

Cruise Control Cancel Switch (Throttle) [A]



Frame Ground [A]
Accessory Relay [B]
ETV Actuator Relay [C]
Starter Relay [D]
Main Fuse 30 A [E]
Fuse Box 1 [F]
Battery 12 V, 18 Ah [G]
Vehicle-down Sensor [H]
Fuse Box 2 [I]
Turn Signal Control Relay [J]
Relay Box [K]
ECU [L]

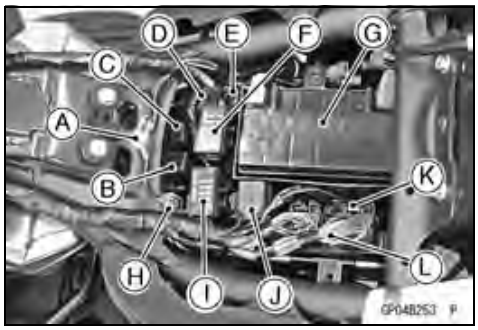

Downloaded from www.vulcanriders-sweden.org

Wiring Diagram

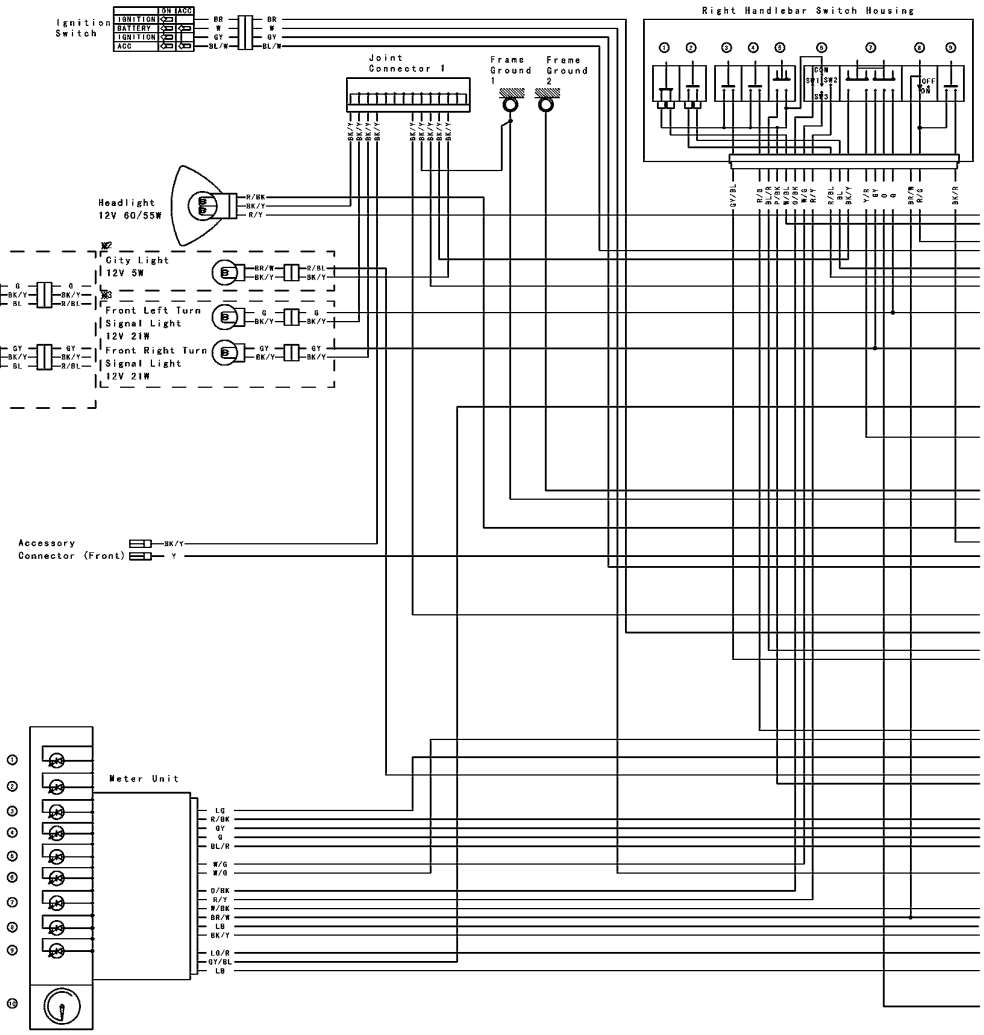

Meter Unit
1. Left Turn Signal Indicator Light (LED)
2. Right Turn Signal Indicator Light (LED)
3. Neutral Indicator Light (LED)
4. High Beam Indicator Light (LED)
5. Warning Indicator Light (LED)
6. Fuel Level Warning Indicator Light (LED)
7. Illumination Light (LED)
8. Cruise Control Indicator Light (LED)
9. Cruise Control Set Indicator Light (LED)
10. Speedometer

※1 : US,CA and CAL Models
※2 : EUR Models
※3 : EUR,AU and SEA Models

LEFT HANDLEBAR SWITCH HOUSING CONNECTIONS

Cruise Control Cancel Switch (Clutch)			Starter Lockout Switch			Horn Button				Dimmer Switch				Turn Signal Switch					
Color	BL	BL	Color	BK	BK	Color	BK/Y	BR/BK		Color	R/Y	BL/Y	R/BK	Color	G	O	GY	BK/Y	Y/R
Clutch Lever			Clutch Lever							HI				L					
Pulled In			Pulled In			Push								OFF (Push)					
Released			Released			Released				LO				R					

W210401EW5 C

Downloaded from www.vulcanriders-sweden.org

Wiring Diagram

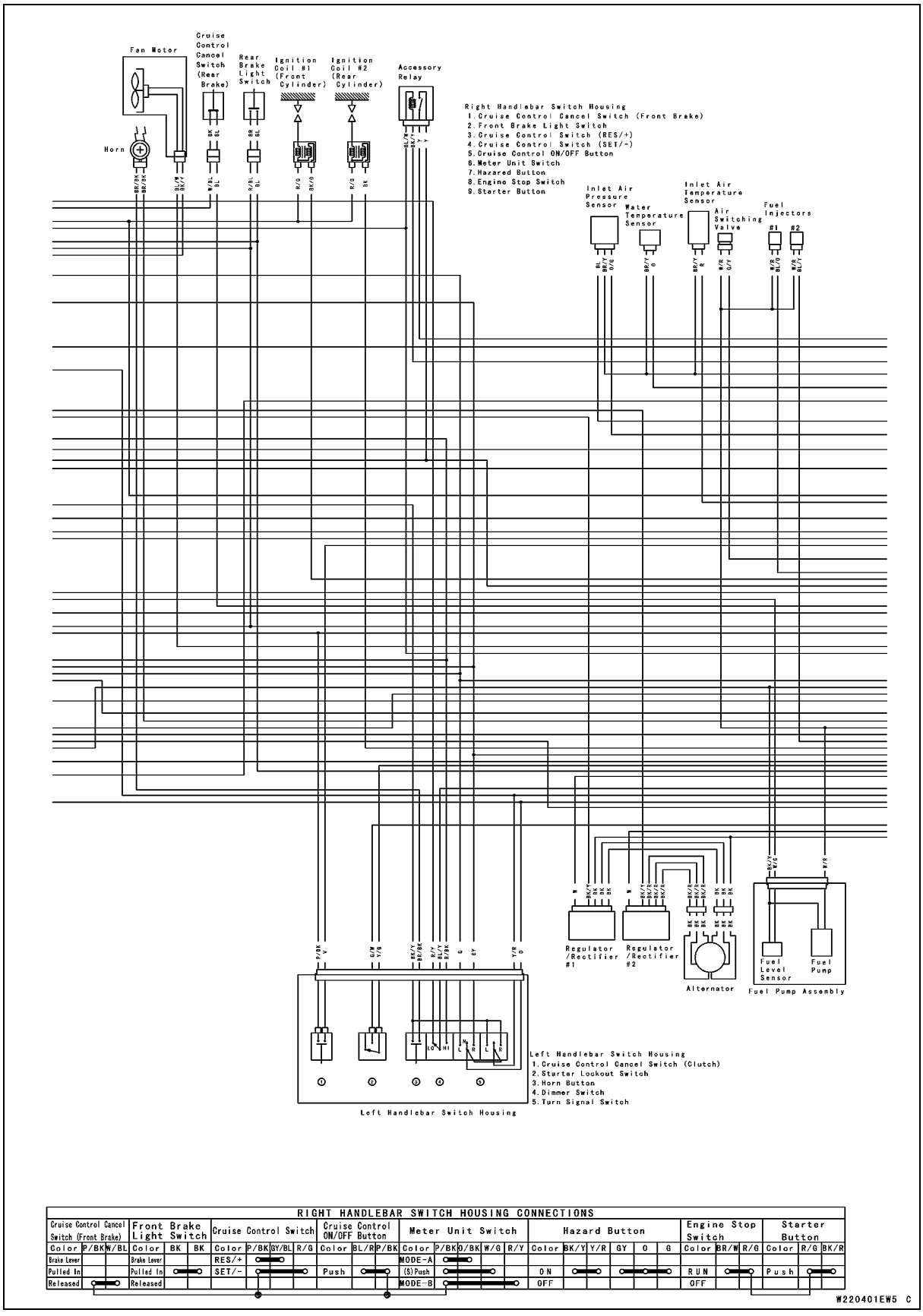

RIGHT HANDLEBAR SWITCH HOUSING CONNECTIONS

Cruise Control Cancel Switch (Front Brake)			Front Brake Light Switch			Cruise Control Switch					Cruise Control ON/OFF Button			Meter Unit Switch					Hazard Button							Engine Stop Switch			Starter Button		
Color	P/BK	W/BL	Color	BK	BK	Color	P/BK	GY/BL	R/G		Color	BL/R	P/BK	Color	P/BK	O/BK	W/G	R/Y	Color	BK/Y	Y/R	GY	O	G		Color	BR/W	R/G	Color	R/G	BK/R
Brake Lever			Brake Lever			RES/+								MODE-A																	
Pulled In			Pulled In			SET/-					Push			(S)Push					ON							RUN			Push		
Released			Released											MODE-B					OFF							OFF					

W220401EW5 C

Downloaded from www.vulcanriders-sweden.org

Wiring Diagram

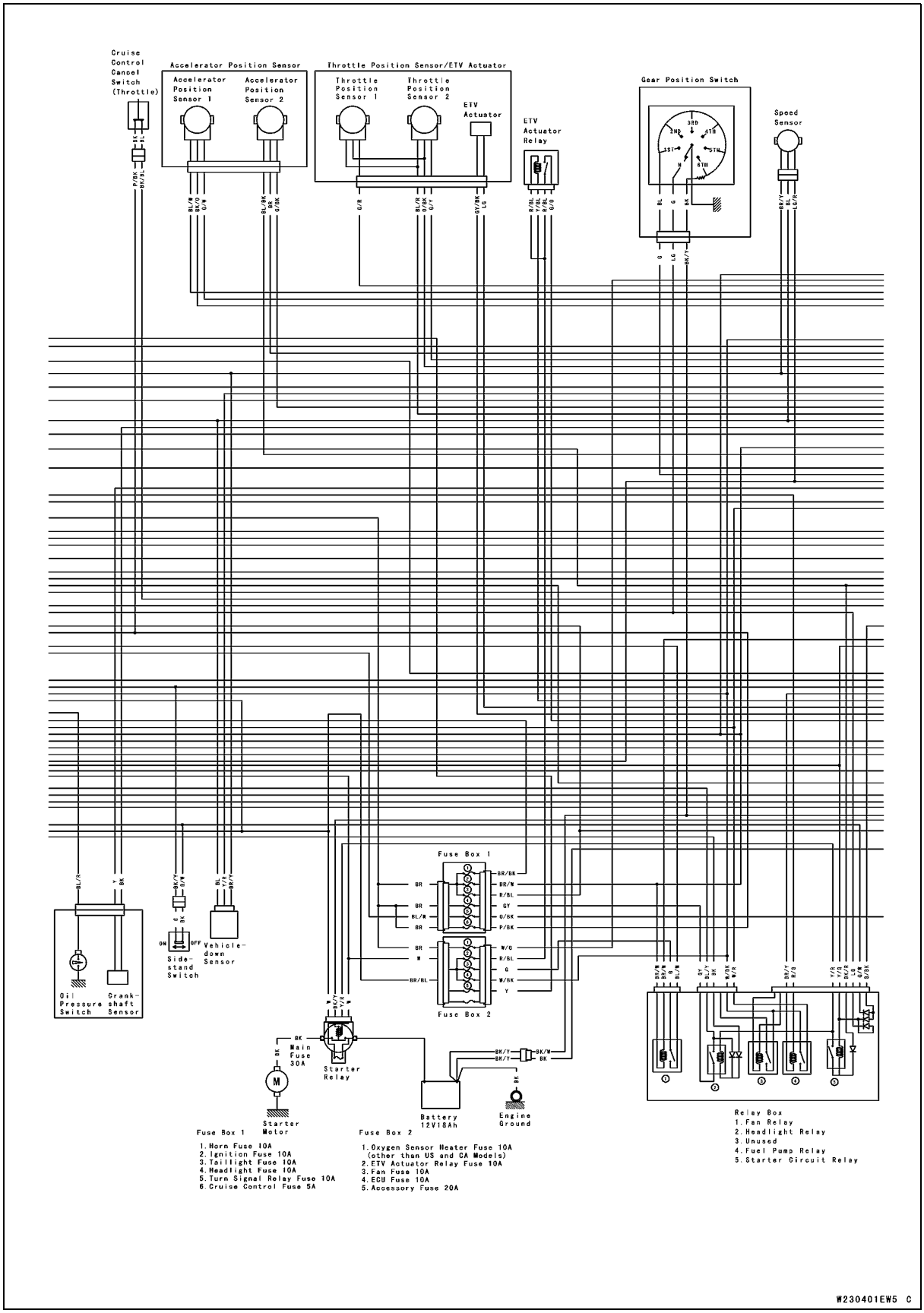

Downloaded from www.vulcanriders-sweden.org

Wiring Diagram

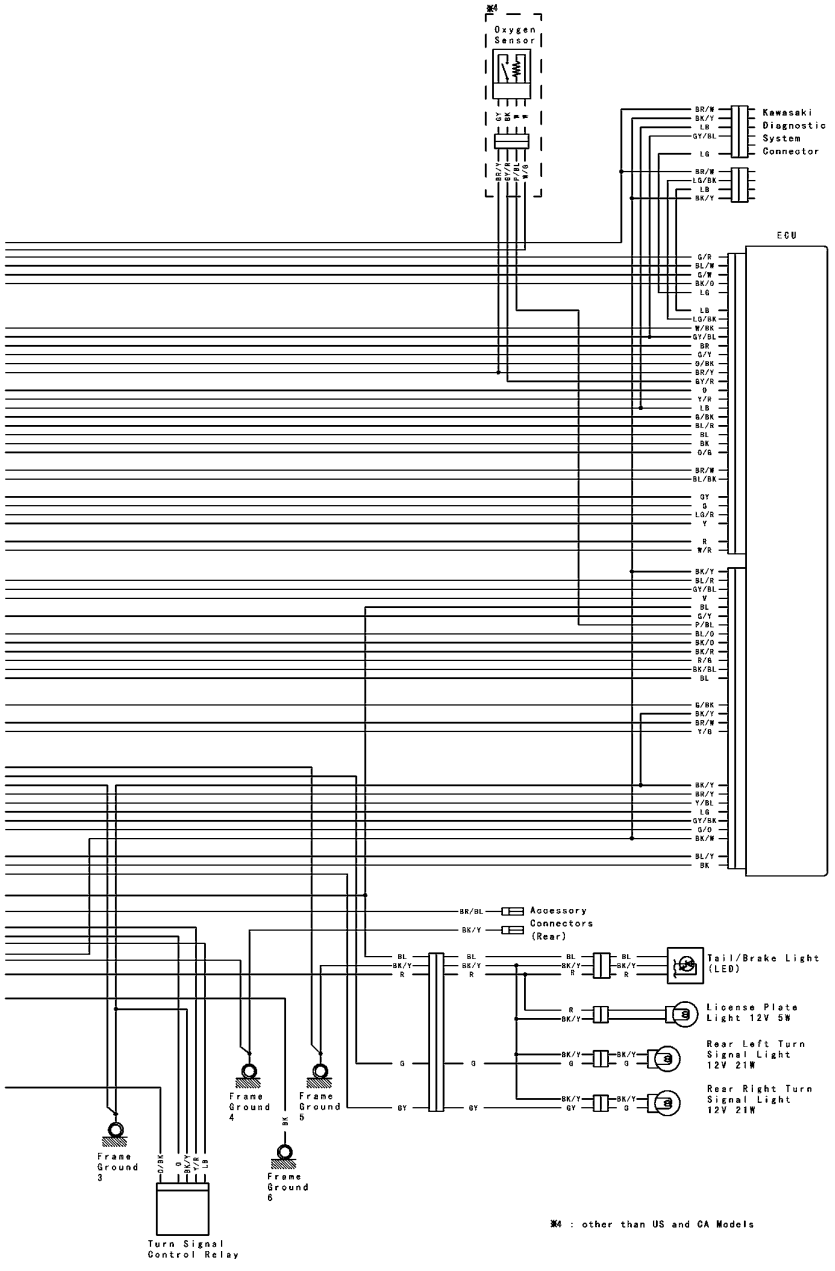

IGNITION SWITCH CONNECTIONS				
Color	BR	W	GY	BL/W
OFF				
ON	○	○	○	○
ACC			○	○

(98052-0400E, 0401E, 0460B)

Color Code	
BK	Black
BL	Blue
BR	Brown
G	Green
GY	Gray
LB	Light Blue
LG	Light Green
O	Orange
P	Pink
PU	Purple
R	Red
V	Violet
W	White
Y	Yellow

W240401EW5 C

Downloaded from www.vulcanriders-sweden.org

Servicing Precautions

There are a number of important precautions that are musts when servicing electrical systems. Learn and observe all the rules below.

- Do not reverse the battery cable connections. This will burn out the diodes on the electrical parts.
- Always check battery condition before condemning other parts of an electrical system. A fully charged battery is a must for conducting accurate electrical system tests.
- The electrical parts should never be struck sharply, as with a hammer, or allowed to fall on a hard surface. Such a shock to the parts can damage them.
- To prevent damage to electrical parts, do not disconnect the battery leads or any other electrical connections when the ignition switch is on, or while the engine is running.
- Because of the large amount of current, never keep the starter button pushed when the starter motor will not turn over, or the current may burn out the starter motor windings.
- Take care not to short the leads that are directly connected to the battery positive (+) terminal to the chassis ground.
- Troubles may involve one or in some cases all items. Never replace a defective part without determining what CAUSED the failure. If the failure was caused by some other item or items, they too must be repaired or replaced, or the new replacement will soon fail again.
- Make sure all connectors in the circuit are clean and tight, and examine wires for signs of burning, fraying, etc. Poor wires and bad connections will affect electrical system operation.
- Measure coil and winding resistance when the part is cold (at room temperature).
- Wire Color Codes:

BK: Black	GY: Gray	R: Red
BL: Blue	LB: Light blue	V: Violet
BR: Brown	LG: Light green	W: White
CH: Chocolate	O: Orange	Y: Yellow
DG: Dark green	P: Pink	
G: Green	PU: Purple	

Downloaded from www.vulcanriders-sweden.org

Electrical Wiring

Wiring Inspection

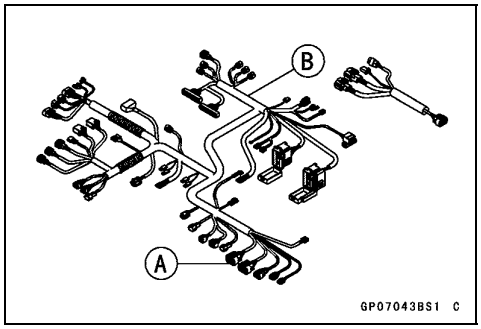

- Visually inspect the wiring for signs of burning, fraying, etc.

★If any wiring is poor, replace the damaged wiring.

- Pull each connector [A] apart and inspect it for corrosion, dirt, and damage.

★If the connector is corroded or dirty, clean it carefully. If it is damaged, replace it.

- Check that the connectors are not loose.
- Check the wiring for continuity.

○Use the wiring diagram to find the ends of the lead which is suspected of being a problem.

○Connect the hand tester between the ends of the leads.

Special Tool - Hand Tester: 57001-1394

○Set the tester to the × 1 Ω range, and read the tester.

★If the tester does not read 0 Ω, the lead is defective. Replace the lead or the wiring harness [B] if necessary.

Downloaded from www.vulcanriders-sweden.org

Battery

Battery Removal

CAUTION

Do not remove the battery cables and fuses for 6 seconds after turning off the ignition switch.

- Turn the ignition switch OFF.
- Remove:
  Front Seat (see Front Seat Removal)
  Connector [A]
  Screws [B]
  Battery Case Cover [C]

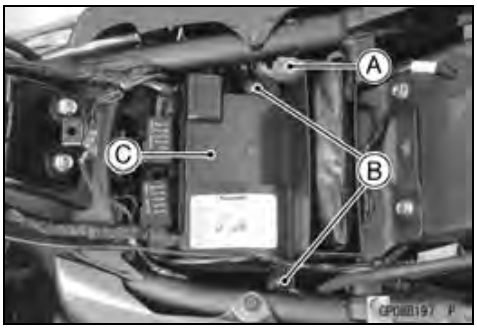

- Disconnect the battery negative (–) cable [A].

CAUTION

Be sure to disconnect the negative (–) cable first.

- Slide the red cap [B].
- Disconnect the battery positive (+) cable [C].
- Pull the battery [D] out of the case.

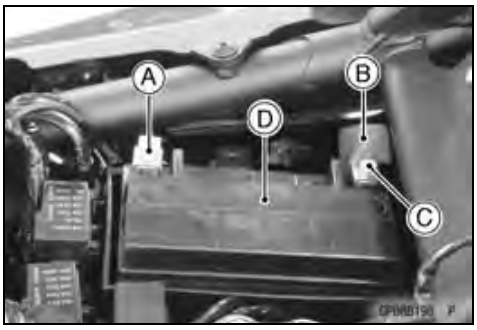

Battery Installation

- Check that the damper [A] is properly on the battery case [B].

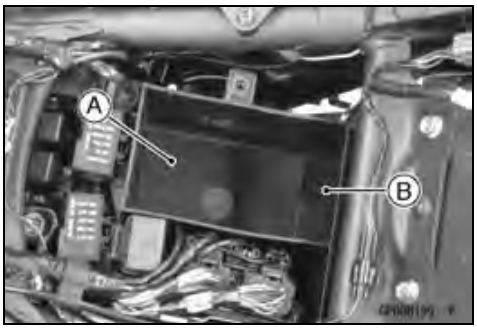

- Put the battery into the battery case so that the positive (+) terminal faces to rear side [A] of the motorcycle.
- Connect the positive (+) cable [B] (red cap) to the positive (+) terminal first, and then the negative (–) cable [C] to the negative (–) terminal.
- Apply a light coat of grease on the terminals to prevent corrosion.
- Cover the positive (+) terminal with the red cap [D].

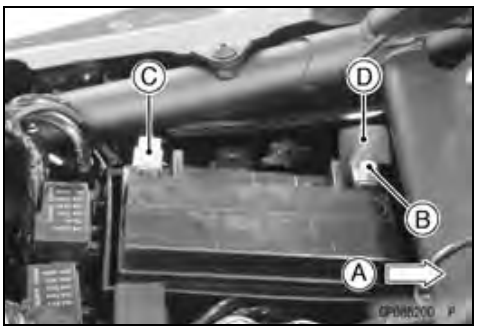

CAUTION

If each battery cable is not correctly disconnected or connected, sparks can arise at electrical connections, causing damage to electrical and DFI parts.

Downloaded from www.vulcanriders-sweden.org

Battery

● Install the battery case cover [A].

NOTE

○*Run each harness [B] under the battery case cover, and do not run them over the frame pipe [C].*

● Install the removed parts (see appropriate chapters).

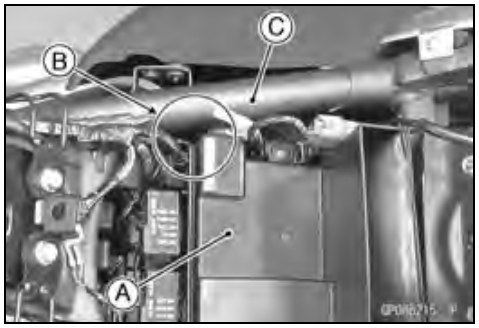

Battery Activation

Electrolyte Filling

● Make sure that the model name [A] of the electrolyte container matches the model name [B] of the battery. These names must be the same.

Battery Model Name for VN1700C: FTZ16-BS

CAUTION

Be sure to use the electrolyte container with the same model name as the battery since the electrolyte volume and specific gravity vary with the battery type. This is to prevent overfilling of the electrolyte, shorting the battery life, and deterioration of the battery performance.

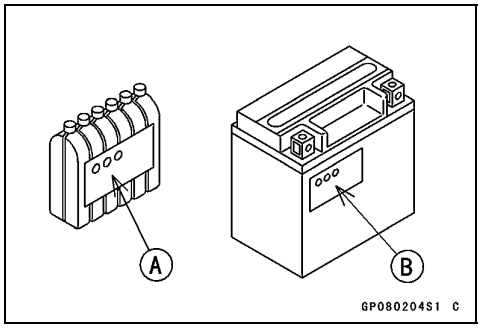

CAUTION

Do not remove the aluminum sealing sheet [A] from the filler ports [B] until just prior to use. Be sure to use the dedicated electrolyte container for correct electrolyte volume.

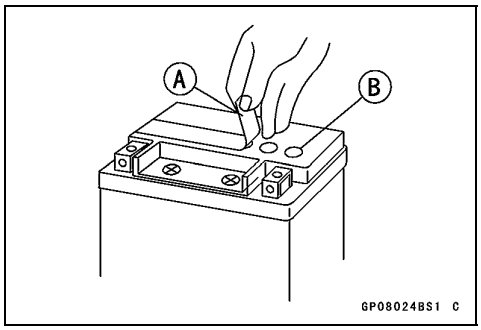

● Place the battery on a level surface.
● Check to see that the sealing sheet has no peeling, tears, or holes in it.
● Remove the sealing sheet.

NOTE

○*The battery is vacuum sealed. If the sealing sheet has leaked air into the battery, it may require a longer initial charge.*

● Remove the electrolyte container from the vinyl bag.
● Detach the strip of caps [A] from the container and set aside, these will be used later to seal the battery.

NOTE

○*Do not pierce or otherwise open the sealed cells [B] of the electrolyte container. Do not attempt to separate individual cells.*

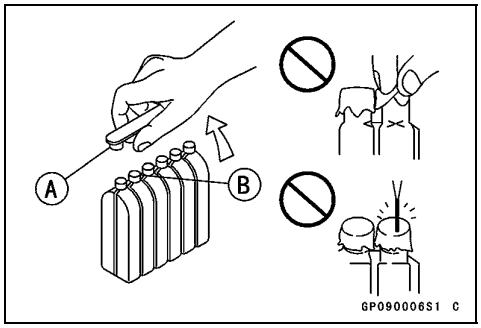

Downloaded from www.vulcanriders-sweden.org

Battery

● Place the electrolyte container upside down with the six sealed cells into the filler ports of the battery. Hold the container level, push down to break the seals of all six cells. You will see air bubbles rising into each cell as the ports fill.

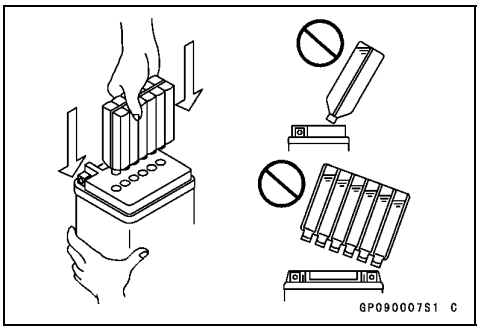

NOTE

○*Do not tilt the electrolyte container*

● Check the electrolyte flow.

★If no air bubbles [A] are coming up from the filler ports, or if the container cells have not emptied completely, tap the container [B] a few times.

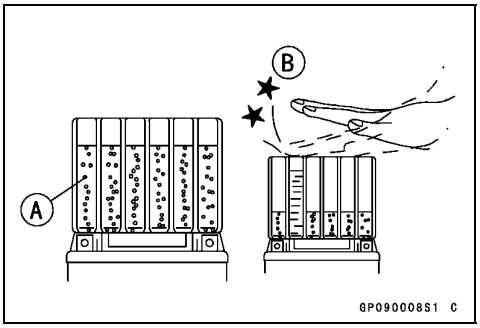

● Keep the container in place for **20** minutes or more. Don't remove the container from the battery until it's empty, the battery requires all the electrolyte from the container for proper operation.

CAUTION

Removal of the container before it is completely empty can shorten the service life of the battery. Do not remove the electrolyte container until it is completely empty and 20 minutes have elapsed.

● Gently remove the container from the battery.

● Let the battery sit for **60** minutes prior to charging to allow the electrolyte to permeate into the plates for optimum performance.

NOTE

○*Charging the battery immediately after filling can shorten service life. Let the battery sit for at least **60** minutes after filling.*

Initial Charge

● Place the strip [A] of caps loosely over the filler ports.

● Newly activated sealed batteries require an initial charge.

Standard Charge 1.8 A × 5 ~ 10 hours

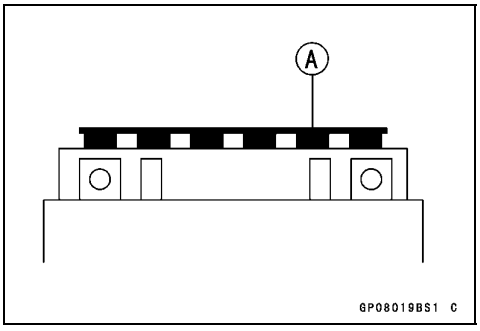

★If using a recommended battery charger, follow the charger's instructions for newly activated sealed battery.

Kawasaki-recommended Chargers

Optimate III

Yuasa 1.5 Amp Automatic Charger

Battery Mate 150-9

★If the above chargers are not available, use equivalent one.

NOTE

○*Charging rates will vary depending on how long the battery has been stored, temperature, and the type of charger used. Let battery sit 30 minutes after initial charge, then check voltage using a voltmeter. If it is not at least 12.6 volts, repeat charging cycle.*

Downloaded from www.vulcanriders-sweden.org

Battery

● After charging is completed, press down firmly with both hands to seat the strip of caps [A] into the battery (don't pound or hammer). When properly installed, the strip of the caps will be level with the top of the battery.

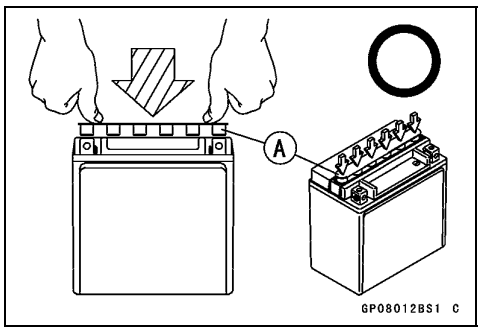

CAUTION

Once the strip of the caps [A] is installed onto the battery, never remove the caps, nor add water or electrolyte to the battery.

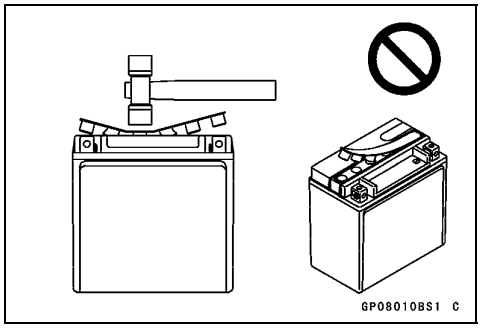

NOTE

○*To ensure maximum battery life and customer satisfaction, it is recommended the battery be load tested at three times its amp-hour rating for 15 seconds.*
Re-check voltage and if less than 12.6 volts repeat the charging cycle and load test. If still below 12.6 volts the battery is defective.

Precautions

1) No need of topping-up

No topping-up is necessary in this battery until it ends its life under normal use. Forcibly prying off the seal cap to add water is very dangerous. Never do that.

2) Refreshing charge

If an engine will not start, a horn sounds weak, or lamps are dim, it indicates the battery has been discharged. Give refresh charge for 5 to 10 hours with charge current shown in the specification (see Refreshing Charge).

When a fast charge is inevitably required, do it following precisely the maximum charge current and time conditions indicated on the battery.

CAUTION

This battery is designed to sustain no unusual deterioration if refresh-charged according to the method specified above. However, the battery's performance may be reduced noticeably if charged under conditions other than given above. Never remove the seal cap during refresh charge.
If by chance an excessive amount of gas is generated due to overcharging, the relief valve releases the gas to keep the battery normal.

3) When you do not use the motorcycle for months:

Give a refresh charge before you store the motorcycle and store it with the negative cable removed. Give a refresh charge **once a month** during storage.

4) Battery life:

If the battery will not start the engine even after several refresh charges, the battery has exceeded its useful life. Replace it (Provided, however, the vehicle's starting system has no problem).

Downloaded from www.vulcanriders-sweden.org

Battery

⚠ WARNING

Keep the battery away from sparks and open flames during charging, since the battery gives off an explosive gas mixture of hydrogen and oxygen. When using a battery charger, connect the battery to the charger before turning on the charger.
This procedure prevents sparks at the battery terminals which could ignite any battery gases.
No fire should be drawn near the battery, or no terminals should have the tightening loosened.
The electrolyte contains sulfuric acid. Be careful not to have it touch your skin or eyes. If touched, wash it off with liberal amount of water. Get medial attention if severe.

Interchange

The sealed battery can fully display its performance only when combined with a proper vehicle electric system. Therefore, replace the sealed battery only on a motorcycle which was originally equipped with the sealed battery.

Be careful, if the sealed battery is installed on a motorcycle which had an ordinary battery as original equipment, the sealed battery's life will be shortened.

Charging Condition Inspection

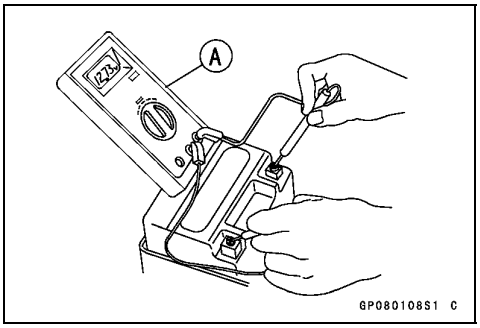

○Battery charging condition can be checked by measuring battery terminal voltage with a digital meter [A].

● Remove the front seat (see Front Seat Removal in the Frame chapter).

● Disconnect the battery terminals (see Battery Removal).

CAUTION

Be sure to disconnect the negative (–) cable first.

● Measure the battery terminal voltage.

NOTE

○*Measure with a digital voltmeter which can be read one decimal place voltage.*

★If the reading is 12.6 V or more, no refresh charge is required, however, if the read is below the specified, refresh charge is required.

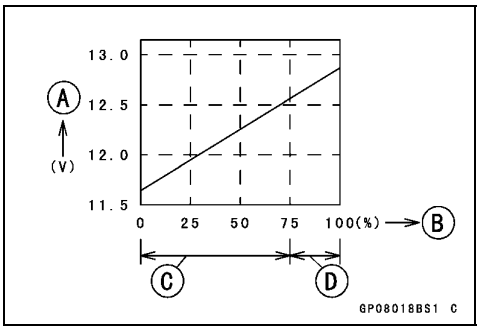

Battery Terminal Voltage
Standard: 12.6 V or more
Terminal Voltage (V) [A]
Battery Charge Rate (%) [B]
Refresh charge is required [C]
Good [D]

Refreshing Charge

● Remove the battery [A] (see Battery Removal).

● Do refresh charge by following method according to the battery terminal voltage.

⚠ WARNING

This battery is sealed type. Never remove seal cap [B] even at charging. Never add water. Charge with current and time as stated below.

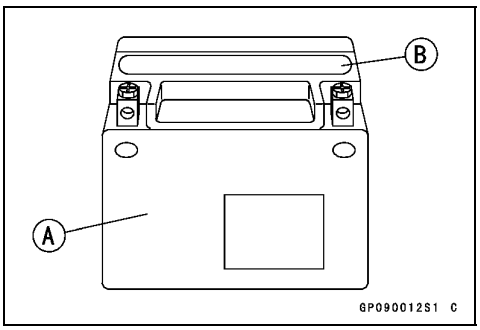

Downloaded from www.vulcanriders-sweden.org

Battery

Terminal Voltage: 11.5 ~ less than 12.6 V
Standard Charge **1.8 A × 5 ~ 10 h (see following chart)**
Quick Charge **9 A × 1 h**

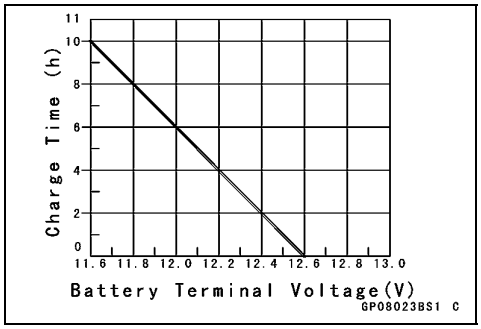

CAUTION

If possible, do not quick charge. If quick charge is done unavoidably, do standard charge later on.

Terminal Voltage: less than 11.5 V
Charging Method: **1.8 A × 20 h**

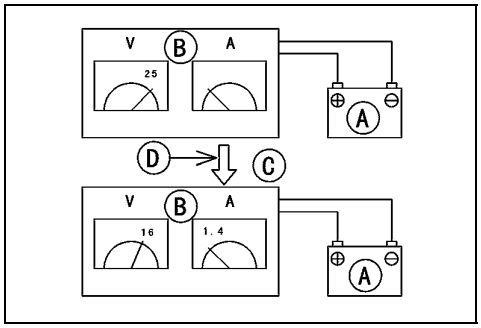

NOTE

○*Increase the charging voltage to a maximum voltage of 25 V if the battery will not accept current initially. Charge for no more than 5 minutes at the increased voltage then check if the battery is drawing current. If the battery will accept current decrease the voltage and charge by the standard charging method described on the battery case. If the battery will not accept current after 5 minutes, replace the battery.*

Battery [A]
Battery Charger [B]
Standard Value [C]
Current starts to flow [D]

● Determine the battery condition after refresh charge.
○Determine the condition of the battery left for 30 minutes after completion of the charge by measuring the terminal voltage according to the table below.

Criteria	Judgement
12.6 V or higher	Good
12.0 ~ lower than 12.6 V	Charge insufficient → Recharge
lower than 12.0 V	Unserviceable → Replace

Downloaded from www.vulcanriders-sweden.org

Charging System

Alternator Cover Removal

- Drain:
  Engine Oil (see Engine Oil Change in the Periodic Maintenance chapter)
  Coolant (see Coolant Change in the Periodic Maintenance chapter)

- Remove:
  Front Footboard Right (see Front Footboard Removal in the Frame chapter)
  Front Exhaust Pipe Cover (see Exhaust Pipe Removal in the Engine Top End chapter)

- Disconnect:
  Oil Pressure Switch Lead [A]
  Crankshaft Sensor Lead Connector [B]
  Alternator Lead Connectors [C]

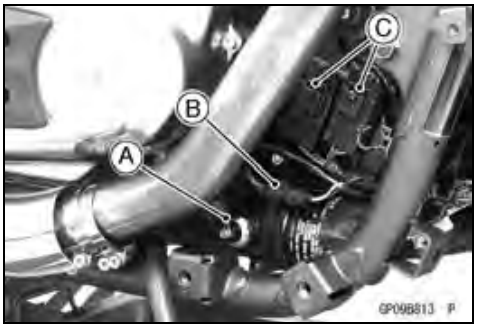

- Clear the leads [A] from the clamp [B].

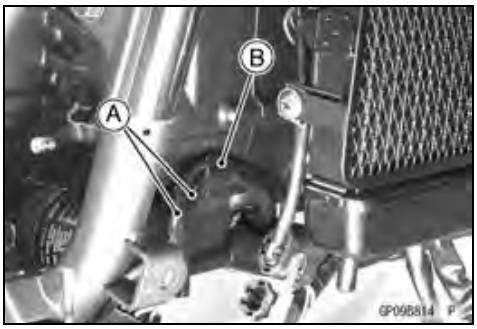

- Remove:
  Water Separator Inner Cover (see Water Separator Cover Removal in the Coolant System chapter)
  Slave Cylinder (see Slave Cylinder Removal in the Clutch chapter)
- Remove the clutch pipe [A] and connector [B] from the bracket [C].

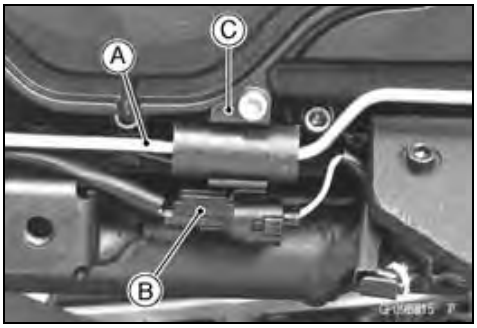

Downloaded from www.vulcanriders-sweden.org

Charging System

- Remove:
  Water Pipe Mounting Bolts [A]

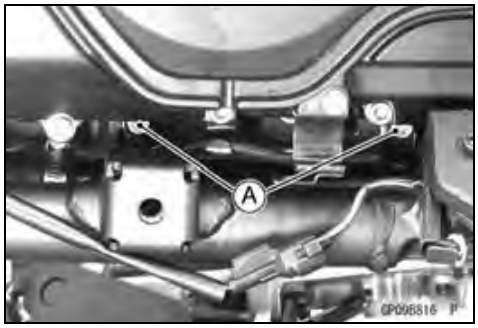

- Remove:
  Water Pipe Mounting Bolt [A]
  Alternator Cover Bolts [B]



- Pull out the alternator cover [A] from the engine a little and remove the water pipe [B].

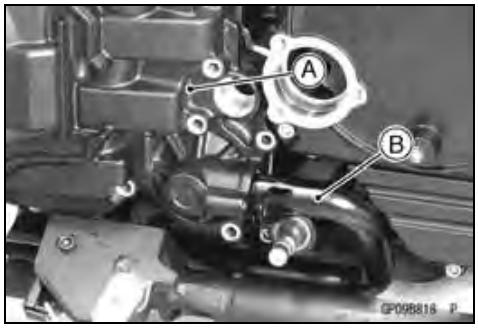

Alternator Cover Installation

- Apply silicone sealant to around grommets [A] of the alternator lead and crankshaft sensor lead.

  Sealant - Kawasaki Bond (Silicone Sealant): 92104-0004

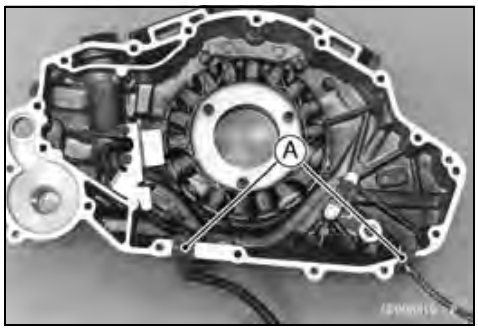

- Check that dowel pins [A] are in place on the crankcase.
- Replace the alternator cover gasket [B] with a new one.

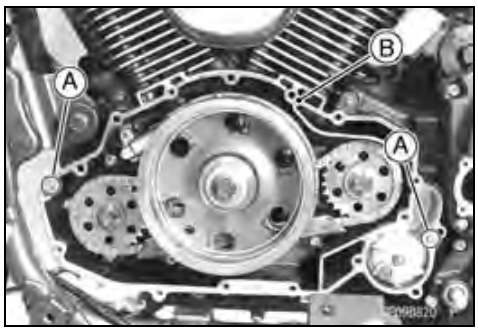

Downloaded from www.vulcanriders-sweden.org

- Replace the O-ring [A] of the water pipe [B] with a new one.
- Apply soap and water solution to the new O-ring.

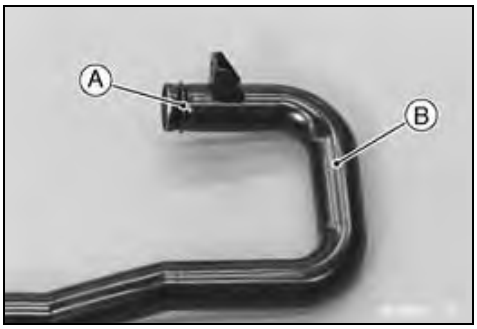

- Insert the water pipe [A] into the alternator cover [B] and install the cover.

CAUTION

Do not pinch the alternator, crankshaft sensor and sidestand switch leads between the alternator cover and the crankcase.

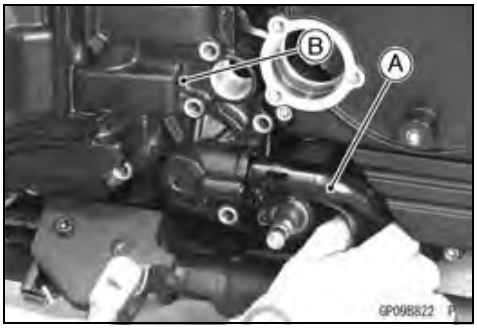

- Install:
  Clamp [A]
  Alternator Cover Bolts [B] L=70 mm (2.8 in.)
  Alternator Cover Bolts [C] L=50 mm (2.0 in.)
- Tighten:

Torque - Alternator Cover Bolts: 12 N·m (1.2 kgf·m, 106 in·lb)

- Run the leads correctly (see Cable, Wire and Hose Routing section in the Appendix chapter).
- Install the removed parts (see appropriate chapters).

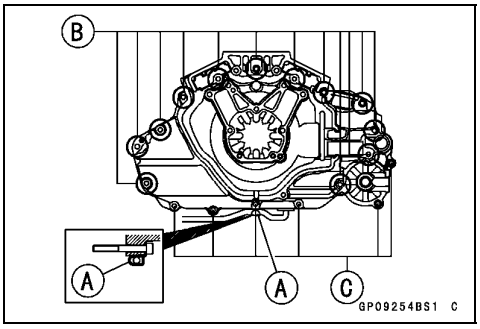

Alternator Stator Coil Removal

- Remove:
  Alternator Cover (see Alternator Cover Removal)
  Holding Plate Bolt [A] and Plate
  Alternator Lead Grommet [B]

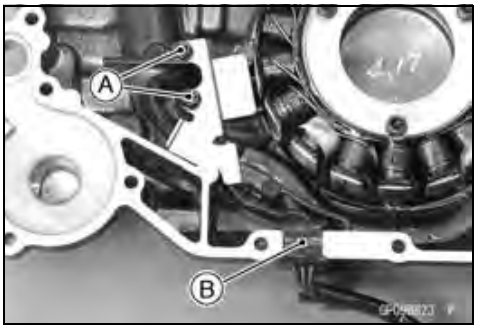

- Remove:
  Alternator Stator Coil Mounting Bolts [A]
  Alternator Stator Coil [B]

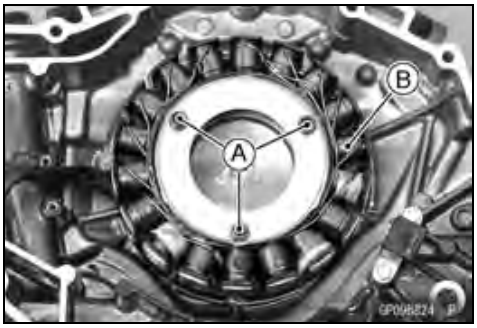

Downloaded from www.vulcanriders-sweden.org

Charging System

Alternator Stator Coil Installation

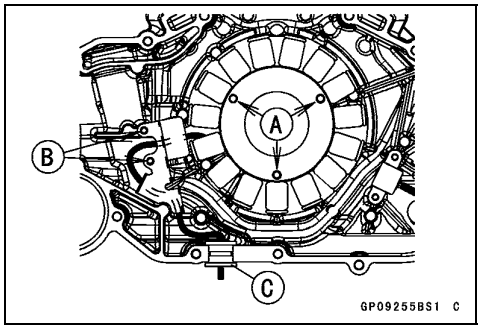

- Apply a non-permanent locking agent to the thread of the alternator stator coil mounting bolts [A].
- Tighten:

Torque - Alternator Stator Coil Mounting Bolts: 12 N·m (1.2 kgf·m, 106 in·lb)

- Apply a non-permanent locking agent to the thread of the stator lead holding plate bolts [B].
- Install:
  Stator Lead Holding Plate Bolts and Holding Plate
- Tighten:

Torque - Stator Lead Holding Plate Bolts: 5.9 N·m (0.60 kgf·m, 52 in·lb)

- Apply silicone sealant to around grommet [C] of the alternator lead.

Sealant - Kawasaki Bond (Silicone Sealant): 92104-0004

- Install:
  Alternator Cover (see Alternator Cover Installation)

Alternator Rotor Removal

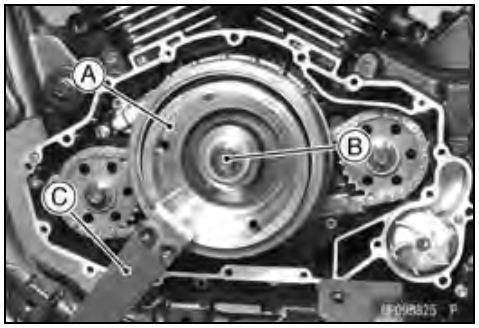

- Remove:
  Alternator Cover (see Alternator Cover Removal)
- Hold the alternator rotor steady with the rotor holder [A], and remove the rotor bolt [B] and washer.

Special Tools - Grip [C]: 57001-1591
Rotor Holder: 57001-1726

Alternator Rotor Installation

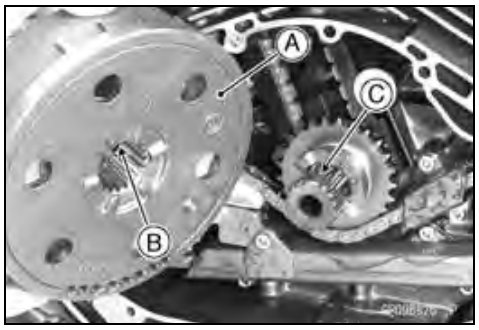

- Install the alternator rotor [A] while fitting the alignment notch [B] of the splines onto the alignment tooth [C].
- Apply molybdenum disulfide oil solution to the threads of the alternator rotor bolt and seating surface of the bolt head.
- Hold the alternator rotor steady with the rotor holder, and install the rotor bolt and washer.

Special Tools - Grip: 57001-1591
Rotor Holder: 57001- 1726

- Tighten:

Torque - Alternator Rotor Bolt: 150 N·m (15.3 kgf·m, 111 ft·lb)

- Install:
  Alternator Cover (see Alternator Cover Installation)

Downloaded from www.vulcanriders-sweden.org

Charging System

Charging Voltage Inspection

- Check the battery condition (see Charging Condition Inspection).
- Warm up the engine to obtain actual alternator operating conditions.
- Remove the front seat (see Front Seat Removal in the Frame chapter).
- Check that the ignition switch is turned off, and connect the hand tester to the battery as shown in the table.

Special Tool - Hand Tester: 57001-1394

Battery Charging Voltage

Tester Range	Connections		Reading at 5 000 rpm
	Tester (+) to	Tester (–) to	
25 V DC	Battery (+)	Battery (–)	14.0 ~ 15.0 V

- Start the engine, and note the voltage readings at various engine speeds. The readings should show nearly battery voltage when the engine speed is low, and as the engine speed rises, the readings should also rise. But they must be kept under the specified voltage.
- Turn off the ignition switch to stop the engine, and disconnect the hand tester.

★If the charging voltage is kept between the values given in the table, the charging system is considered to be working normally.

★If the output voltage is much higher than the values specified in the table, the regulator/rectifier is defective or the regulator/rectifier leads are loose or open.

★If the battery voltage does not rise as the engine speed increases, then the regulator/rectifier is defective or the alternator output is insufficient for the loads. Check the alternator and regulator/rectifier to determine which part is defective.

Alternator Inspection

There are three types of alternator failures: short, open (lead burned out), or loss in rotor magnetism. A short or open in one of the stator coil lead will result in either a low output, or no output at all. A loss in rotor magnetism, which may be caused by dropping or hitting the alternator, by leaving it near an electromagnetic field, or just by aging, will result in low output.

- To check the alternator output voltage, do the following procedures.

○Remove the front exhaust pipe cover (see Exhaust Pipe Removal in the Engine Top End chapter).

○Disconnect the crankshaft sensor lead connector [A] temporarily.

○Remove the alternator lead connectors [B] to upper side from the bracket.

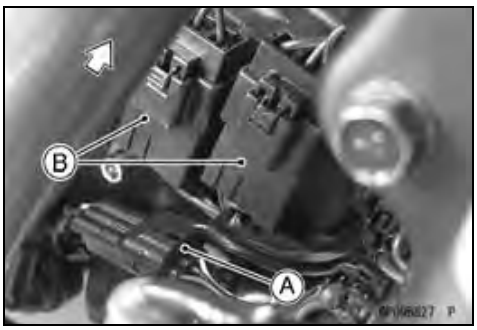

Downloaded from www.vulcanriders-sweden.org

Charging System

○Disconnect the alternator lead connectors [A].

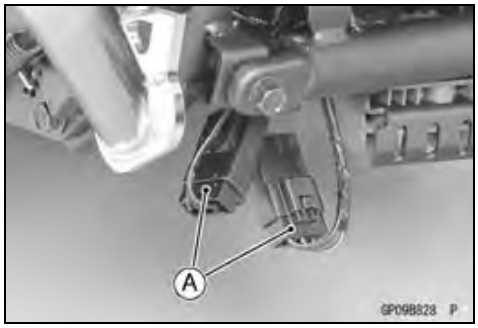

○Connect the hand tester [A] to each connector [B] as shown in the table 1.

Special Tool - Hand Tester: 57001-1394

○Connect the crankshaft sensor lead connector.
○Start the engine.
○Run it at the 4 000 rpm.
○Note the voltage readings (total 3 measurements at one connector).

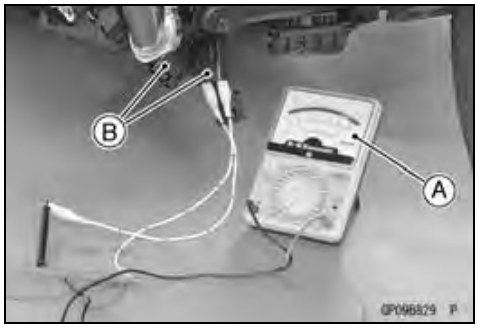

Table 1 Alternator Output Voltage

Tester Range	Connections		Reading at 4 000 rpm
	Tester (+) to	Tester (–) to	
AC 250 V	One black lead	Another black lead	76 V or more

★If the output voltage shows the value in the table, the alternator operates properly.
★A much lower reading than the value in the table indicates that the alternator is defective.

● Check the stator coil resistance as follows:
○Stop the engine.
○Connect the hand tester [A] to each connector [B] as shown in the table2.
○Note the resistance readings.

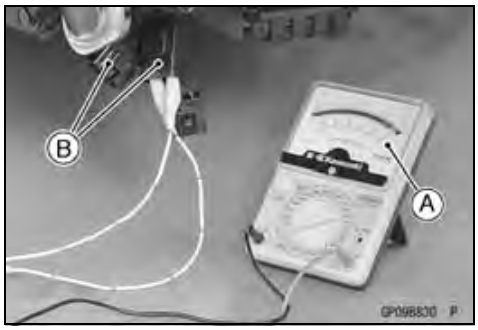

Table 2 Stator Coil Resistance **at 20°C (68°F)**

Tester Range	Connections		Reading
	Tester (+) to	Tester (–) to	
×1 Ω	One black lead	Another black lead	0.23 ~ 0.28 Ω

★If there is more resistance than shown in the table, or no hand tester reading (infinity), the stator has an open lead and must be replaced. Much less than this resistance means the stator is shorted, and must be replaced.
● Using the highest resistance range of the hand tester, measure the resistance between each of the black leads and chassis ground.
★Any hand tester reading less than infinity (∞) indicates a short, necessitating stator replacement.
★If the stator coil has normal resistance, but the voltage check showed the alternator to be defective, then the rotor magnets have probably weakened, and the rotor must be replaced.
○Repeat the test for another connector.

Downloaded from www.vulcanriders-sweden.org

Charging System

Regulator/Rectifier Removal

- Remove:
  Connector Bracket Bolt [A]
  Bolts [B] and Cross Pipe [C]
- Pull out the cross pipe from the projections [D] of the radiator.

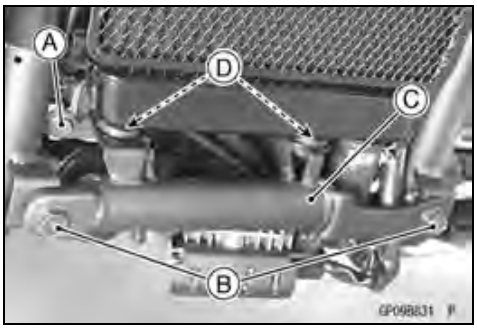

- Disconnect:
  Regulator/Rectifier Lead Connectors [A]
- Remove:
  Regulator/Rectifier Bolts [B] and Nuts
  Regulator/Rectifiers [C]

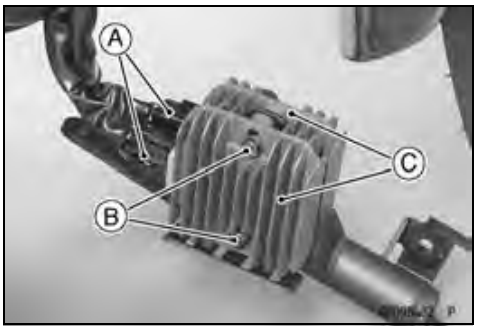

Regulator/Rectifier Installation

- Run the regulator/rectifier leads according to the Cable, Wire, and Hose Routing section in the Appendix chapter.
- Tighten:

Torque - Cross Pipe Bolts: 34 N·m (3.5 kgf·m, 25 ft·lb)

Downloaded from www.vulcanriders-sweden.org

Charging System

Regulator/Rectifier Inspection

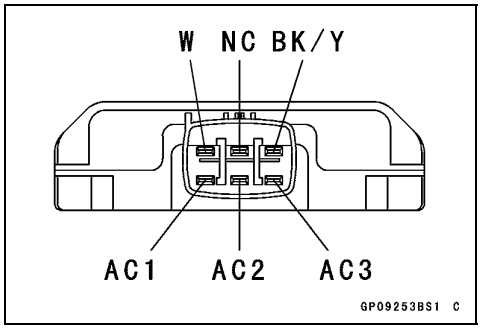

- Remove:
  Regulator/Rectifier (see Regulator/Rectifier Removal)
- Set the hand tester to the × 1 kΩ range and make the measurements shown in the table.

Special Tool - Hand Tester: 57001-1394

- Connect the hand tester to the regulator/rectifier.

★If the tester readings are not as specified, replace the regulator/rectifier.

CAUTION

Use only Kawasaki Hand Tester 57001-1394 for this test. A tester other than the Kawasaki Hand Tester may show different readings. If a megger or a meter with a large capacity battery is used, the regulator/rectifier will be damaged.

Regulator/Rectifier Resistance (Unit: kΩ)

		Tester (+) Lead Connection					
	Terminal	W	NC	BK/Y	AC1	AC2	AC3
(−)*	W	–	∞	∞	∞	∞	∞
	NC	∞	–	∞	∞	∞	∞
	BK/Y	5~15	∞	–	3~11	3~11	3~11
	AC1	3~11	∞	∞	–	∞	∞
	AC2	3~11	∞	∞	∞	–	∞
	AC3	3~11	∞	∞	∞	∞	–

(−)*: Tester (−) Lead Connection

Downloaded from www.vulcanriders-sweden.org

Charging System

Charging System Circuit

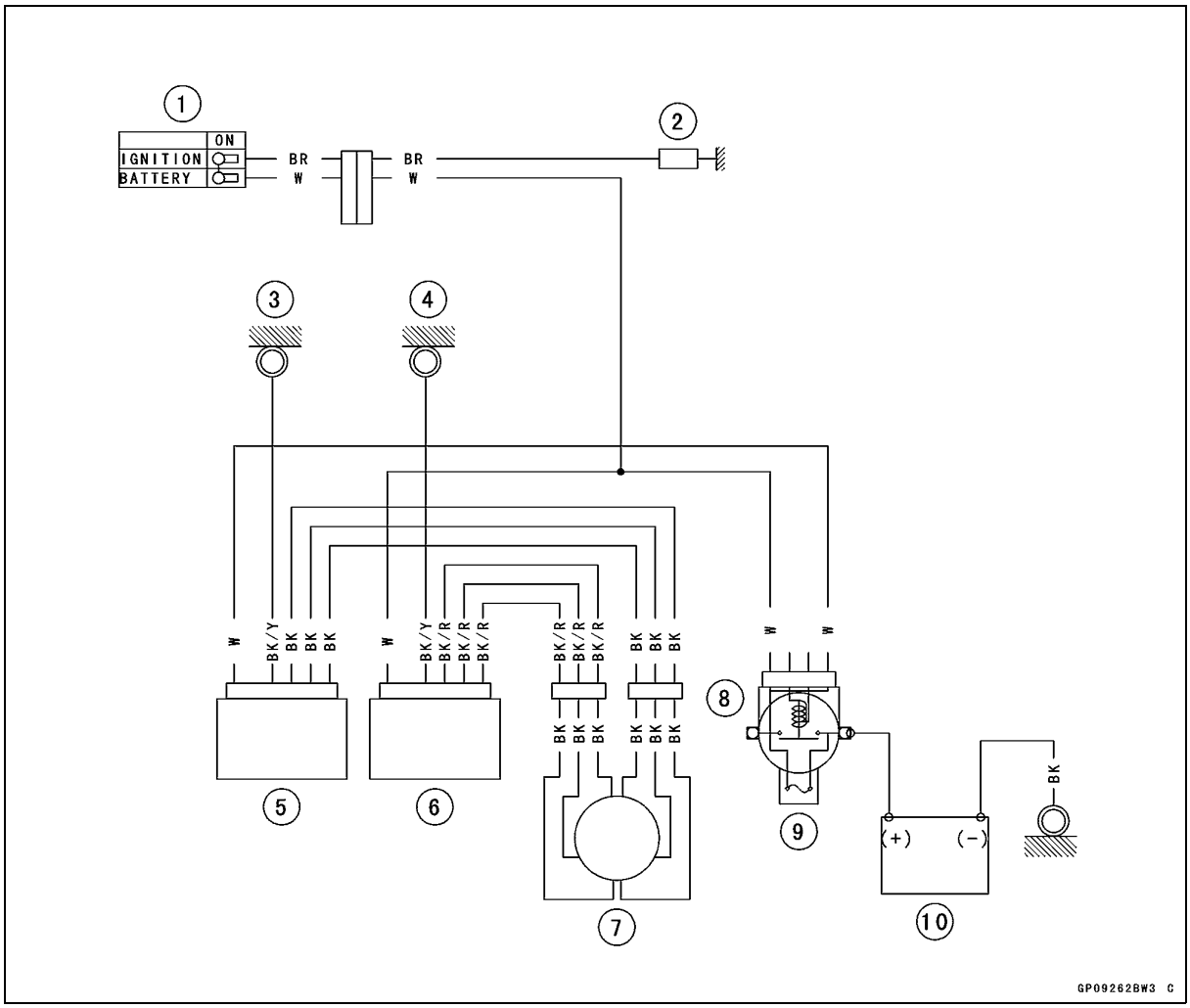

1. Ignition Switch
2. Load
3. Frame Ground 1
4. Frame Ground 2
5. Regulator/Rectifier #1
6. Regulator/Rectifier #2
7. Alternator
8. Starter Relay
9. Main Fuse 30 A
10. Battery

Downloaded from www.vulcanriders-sweden.org

Ignition System

⚠ WARNING

The ignition system produces extremely high voltage. Do not touch the spark plugs, ignition coils, or spark plug high-tension cables while the engine is running, or you could receive a severe electrical shock.

CAUTION

Do not disconnect the battery cables or any other electrical connections when the ignition switch is on, or while the engine is running. This is to prevent IC igniter damage in the ECU.
Do not install the battery backwards. The negative side is grounded. This is to prevent damage to the IC igniter in the ECU and the diodes.

Ignition Coil Removal

- Remove:
  Fuel Tank (see Fuel Tank Removal in the Fuel System (DFI) chapter)
  Spark Plug Cap [A] (Rear Cylinder)



- Remove:
  Ignition Coil Mounting Nuts [A]
  Primary Leads [B]
  Ignition Coil #1 [C] (Front Cylinder)

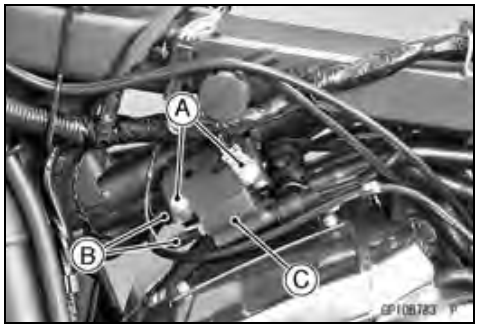

- Remove:
  Spark Plug Cap [A] (Front Cylinder)
  Ignition Coil Mounting Nuts [B]
  Primary Leads [C]
  Ignition Coil #2 [D] (Rear Cylinder)

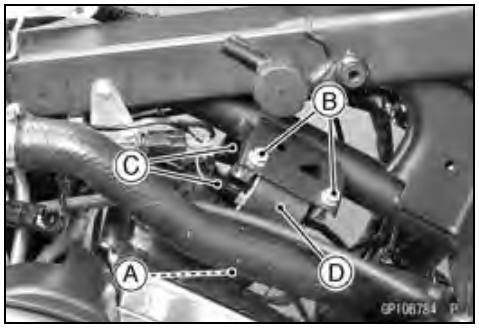

Downloaded from www.vulcanriders-sweden.org

Ignition System

Ignition Coil Installation

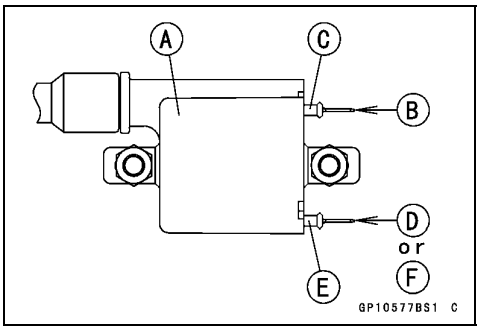

- Run the high-tension cables according to the Cable, Wire, and Hose Routing section in the Appendix chapter.
- Connect the primary leads to the ignition coil [A].

Ignition Coil #1 (Front Cylinder)

R/G Lead [B] to Green Terminal Cover [C]

BK/O Lead [D] to Black Terminal Cover [E]

Ignition Coil #2 (Rear Cylinder)

R/G Lead [B] to Green Terminal Cover [C]

BK Lead [F] to Black Terminal Cover [E]

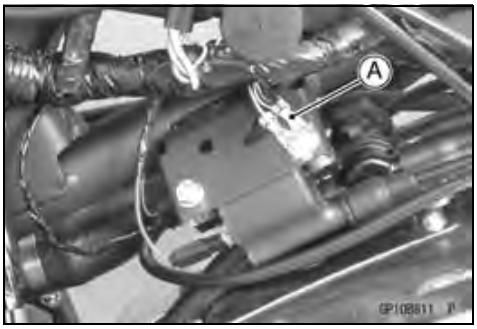

- Install:
  Ignition Coil
  Frame Ground Lead Terminal [A] (at Ignition Coil #1 (Front Cylinder)
- Tighten the ignition coil mounting nuts.

Ignition Coil Inspection

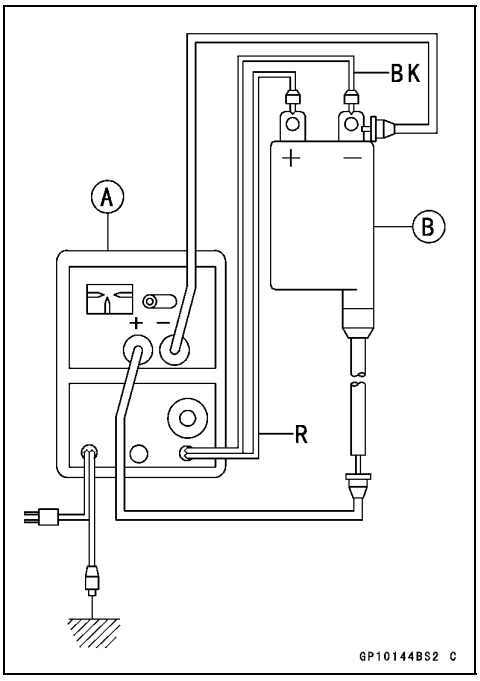

- Remove the ignition coils (see Ignition Coil Removal in this chapter).
- Measure the arcing distance with a commercially available coil tester [A] to check the condition of the ignition coil [B].
- Connect the ignition coil (with the spark plug cap left attached at the end of the spark plug terminal) to the tester in the manner prescribed by the manufacturer and measure the arcing distance.

3 Needle Arcing Distance
Standard: 6 mm (0.24 in.) or more

⚠ WARNING

To avoid extremely high voltage shocks, do not touch the coil body or leads.

★If the distance reading is less than the specified value, the ignition coil or spark plug caps are defective.

- To determine which part is defective, measure the arcing distance again with the spark plug caps removed from the ignition coil. Remove the caps by turning them counterclockwise.

★If the arcing distance is subnormal as before, the trouble is with the ignition coil itself. If the arcing distance is now normal, the trouble is with the spark plug cap.

★If the coil tester is not available, the coil can be checked for a broken or badly shorted winding with the hand tester.

Special Tool - Hand Tester: 57001-1394

NOTE

○*The hand tester cannot detect layer shorts and shorts resulting from insulation breakdown under high voltage.*

Downloaded from www.vulcanriders-sweden.org

Ignition System

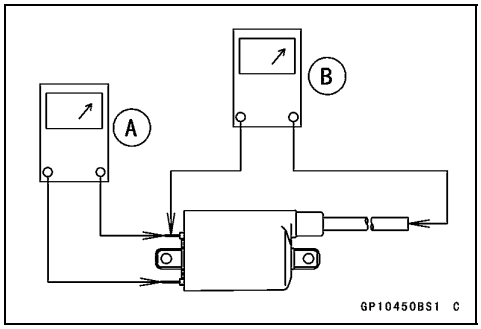

● Measure the primary winding resistance [A] as follows.
○Connect the hand tester between the coil terminals.
○Set the tester to the × 1 Ω range, and read the tester.
● Measure the secondary winding resistance [B] as follows.
○Remove the plug caps by turning them counterclockwise.
○Connect the tester between the spark plug High-Tension cables.
○Set the tester to the × 1 kΩ range and read the tester.

Ignition Coil Winding Resistance

Primary Windings:	**1.8 ~ 2.7 Ω**
Secondary Windings:	**10.4 ~ 15.6 kΩ**

★If the tester does not read as specified, replace the coil.
○To install the plug cap, turn it clockwise.

Spark Plug Removal

● Refer to the Spark Plug Replacement in the Periodic Maintenance chapter.

Spark Plug Installation

● Refer to the Spark Plug Replacement in the Periodic Maintenance chapter.

Spark Plug Condition Inspection

● Refer to the Spark Plug Condition Inspection in the Periodic Maintenance chapter.

Downloaded from www.vulcanriders-sweden.org

Ignition System

Ignition Coil Primary Peak Voltage

NOTE

○*Be sure the battery is fully charged.*

- Remove the fuel tank (see Fuel Tank Removal in the Fuel System (DFI) chapter).
- Remove all the spark plug caps but do not remove the spark plugs.
- Install new spark plug into the spark plug cap.
- Connect the peak voltage adapter [A] to the hand tester [B].

Hand Tester Range: DC 1 000 V

Special Tools - Hand Tester: 57001-1394
Peak Voltage Adapter: 57001-1415
Type: KEK-54-9-B

- Insert the needle adapter [C] into the ignition coil primary lead terminal.

Front Ignition Coil [D]: BK/O Lead Terminal
Rear Ignition Coil: BK Lead Terminal

Special Tool - Needle Adapter Set: 57001-1457

- Connect the peak voltage adapter to the needle adapter and the ground [E].

Primary Lead Connections:

	Adapter (R)		Adapter (BK)
Front Ignition Coil:	**BK/O**	←→	**Ground**
Rear Ignition Coil:	**BK**	←→	**Ground**

ECU [F]
Battery [G]

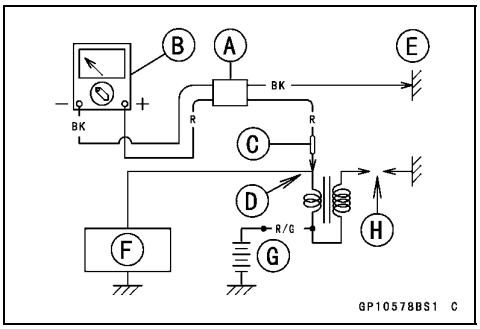

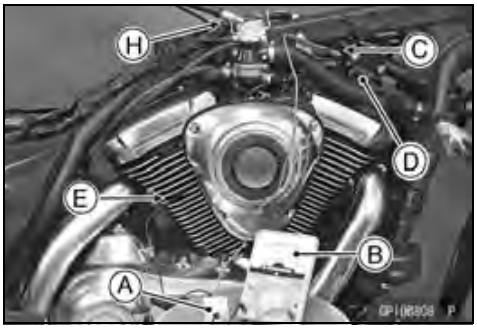

⚠ WARNING

To avoid extremely high voltage shocks, do not touch the spark plugs or tester connections.

- Turn the engine stop switch to run position .
- Turn the ignition switch to ON.
- Ground the new spark plug [H] onto the engine or frame.
- Pushing the starter button, turn the engine 4 ~ 5 seconds with the transmission in neutral to measure the primary peak voltage.
- Repeat the measurements 5 times for one ignition coil.

Ignition Coil Primary Peak Voltage
Standard: 230 V or more

- Repeat the test for the other ignition coil.

★If the reading is less than the specified value, check the following:
Ignition Coils (see Ignition Coil Inspection)
Crankshaft Sensor (see Crankshaft Sensor Inspection)

★If the ignition coils and crankshaft sensor are normal, check the ECU (see ECU Power Supply Inspection in the Fuel System (DFI) chapter).

Downloaded from www.vulcanriders-sweden.org

Ignition System

Crankshaft Sensor Removal

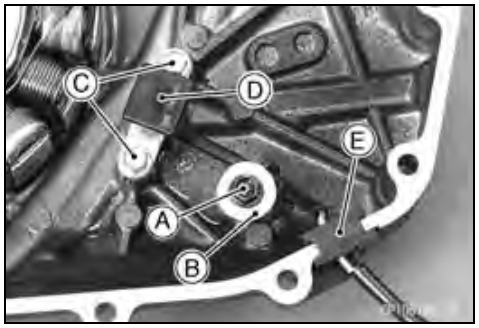

- Remove:
  Alternator Cover (see Alternator Cover Removal)
  Crankshaft Sensor Lead Holding Plate Bolt [A] and Holding Plate [B]
  Crankshaft Sensor Bolts [C]
  Crankshaft Sensor [D] and Grommet [E]

Crankshaft Sensor Installation

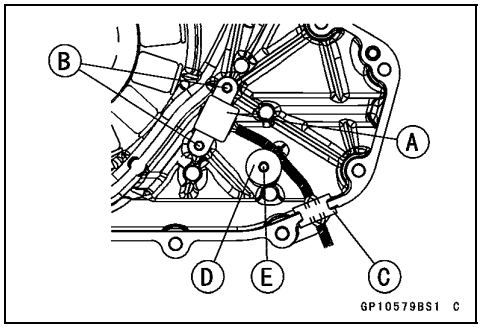

- Install:
  Crankshaft Sensor [A]
  Crankshaft Sensor Bolts [B]
- Tighten:

Torque - Crankshaft Sensor Bolts: 5.9 N·m (0.60 kgf·m, 52 in·lb)

- Apply silicone sealant to the circumference of the crankshaft sensor lead grommet [C], and fit the grommet into the notch of the cover securely.

Sealant - Kawasaki Bond (Silicone Sealant): 92104-0004

- Secure the crankshaft sensor lead with the holding plate [D], and apply a non-permanent locking agent to the thread of the crankshaft sensor lead holding plate bolt [E] and tighten it.

Torque - Crankshaft Sensor Lead Holding Plate Bolt: 5.9 N·m (0.60 kgf·m, 52 in·lb)

Crankshaft Sensor Inspection

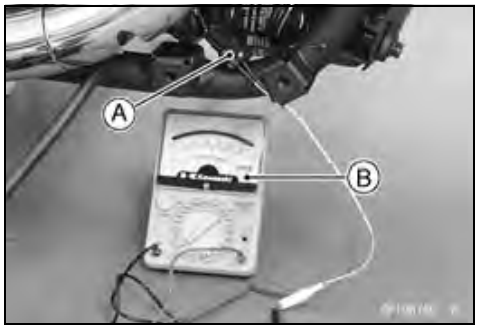

- Remove:
  Front Footboard Right (see Front Footboard Removal in the Frame chapter)
- Disconnect the crankshaft sensor lead connector [A] (see Alternator Cover Removal).
- Set the hand tester [B] to the × 10 Ω range and connect it to the crankshaft sensor lead connector.

Special Tool - Hand Tester: 57001-1394

Crankshaft Sensor Resistance
Connections: BK Lead [C] ←→ Y Lead [D]
Standard: 376 ~ 564 Ω

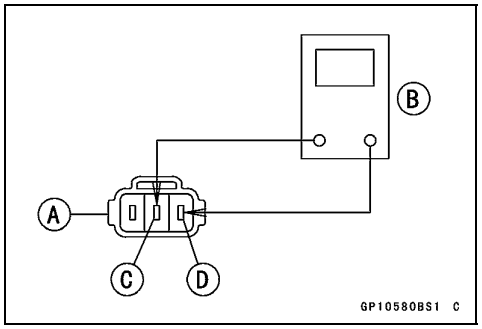

★If there is more resistance than the specified value, the coil has an open lead and must be replaced. Much less than this resistance means the coil is shorted, and must be replaced.

- Using the highest resistance range of the tester, measure the resistance between the crankshaft sensor leads and chassis ground.

★Any tester reading less than infinity (∞) indicates a short, necessitating replacement of the crankshaft sensor assembly.

Downloaded from www.vulcanriders-sweden.org

Ignition System

Crankshaft Sensor Peak Voltage Inspection

NOTE

○*Be sure the battery is fully charged.*
○*Using the peak voltage adapter is more reliable way to determine the condition of the crankshaft sensor than crankshaft sensor internal resistance measurements.*

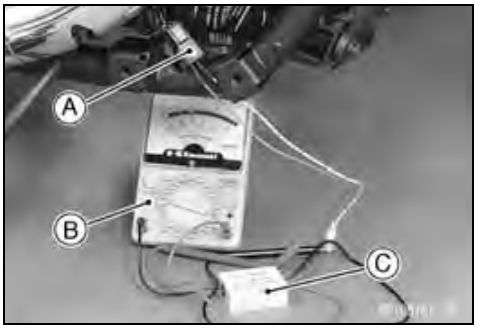

● Disconnect the crankshaft sensor lead connector [A] (see Alternator Cover Removal).
● Set the hand tester [B] to the DC 10 V range, and connect it to the peak voltage adapter [C].

Special Tools - Hand Tester: 57001-1394
Peak Voltage Adapter: 57001-1415
Type: KEK-54-9-B

● Connect the adapter to the terminals of the crankshaft sensor lead connector.

Connections:

Crankshaft Sensor Lead Connector		Peak Voltage Adapter		Hand Tester
Y Lead [D]	←	R Lead	→	(+)
BK Lead [E]	←	BK Lead	→	(–)

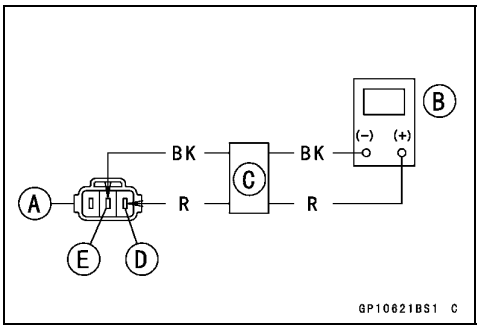

● Turn the engine stop switch to run position.
● Turn the ignition switch to ON.
● Pushing the starter button, turn the engine 4 ~ 5 seconds with the transmission in neutral to measure the peak voltage.
● Repeat the measurements 5 times.

Crankshaft Sensor Peak Voltage
Standard: 4 V or more

★If the reading is less than the standard, inspect the crankshaft sensor (see Crankshaft Sensor Inspection).

Interlock Operation Inspection

● Raise the rear wheel off the ground (see Rear Wheel Removal in the Wheels/Tires chapter).

1st Check

● Start the engine to the following conditions.

Condition:
Transmission Gear → 1st Position
Clutch Lever → Release
Sidestand → Down or Up

○Turn the ignition switch to ON and push the starter button.
○Then the starter motor should not turn when the starter system circuit is normality.
★If the engine is start, inspect the starter lockout switch, gear position switch, and relay box.

Downloaded from www.vulcanriders-sweden.org

Ignition System

2nd Check

● Start the engine to the following conditions.

Condition:
Transmission Gear → 1st Position
Clutch Lever → Pulled in
Sidestand → Up

○Turn the ignition switch to ON and push the starter button.
○Then the starter motor should turn when the starter system circuit is normality.
★If the starter motor is not turn, inspect the starter lockout switch, gear position switch, sidestand switch, relay box and starter relay.

3rd Check

● Inspect the engine for its secure stop after the following operations are completed.
● Run the engine to the following conditions.

Condition:
Transmission Gear → 1st Position
Clutch Lever → Release
Sidestand → Up

● Set the sidestand on the ground, then the engine will stop.
★If whichever may not be stopped, inspect the gear position switch, sidestand switch and relay box.
★If their parts are normality, replace the ECU.

IC Igniter Inspection

○The IC igniter is built in the ECU [A].
● Refer to the following items.
Interlock Operation Inspection (see Interlock Operation Inspection)
Ignition System Troubleshooting (see Ignition System Troubleshooting)
ECU Power Supply Inspection (see ECU Power Supply Inspection in the Fuel System (DFI) chapter)

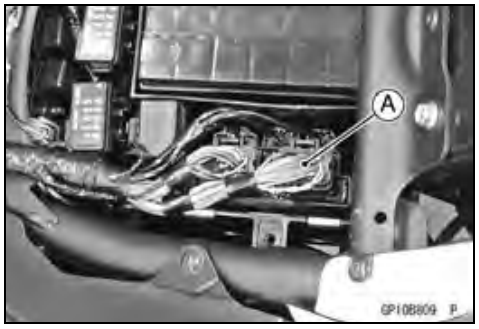

Downloaded from www.vulcanriders-sweden.org

Ignition System

Ignition System Troubleshooting

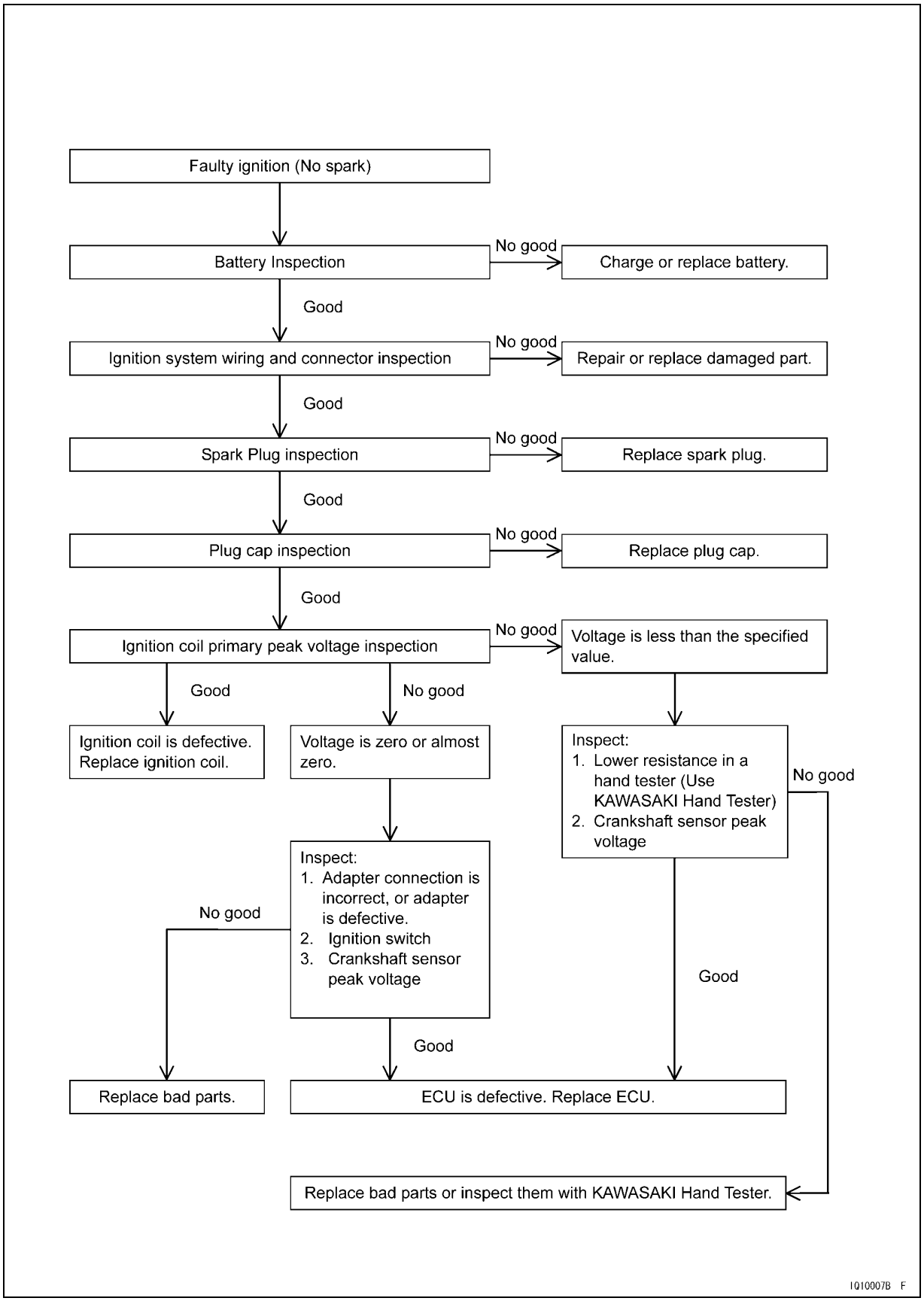

Downloaded from www.vulcanriders-sweden.org

Ignition System

Ignition System Circuit

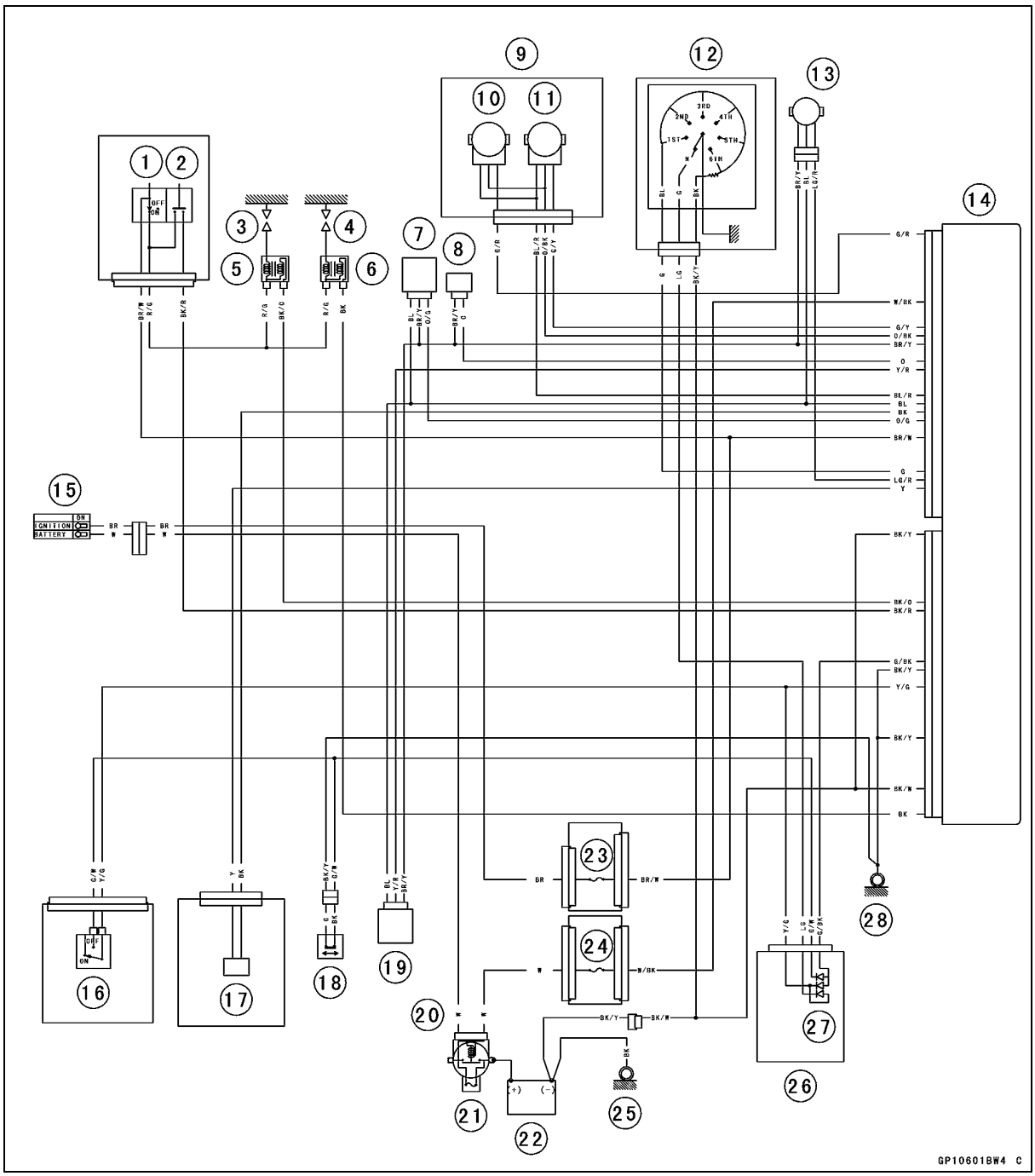

1. Engine Stop Switch
2. Starter Button
3. Spark Plug #1 (Front Cylinder)
4. Spark Plug #2 (Rear Cylinder)
5. Ignition Coil #1 (Front Cylinder)
6. Ignition Coil #2 (Rear Cylinder)
7. Inlet Air Pressure Sensor
8. Water Temperature Sensor
9. Throttle Position Sensor/ETV Actuator
10. Throttle Position Sensor 1
11. Throttle Position Sensor 2
12. Gear Position Switch
13. Speed Sensor
14. ECU
15. Ignition Switch
16. Starter Lockout Switch
17. Crankshaft Sensor
18. Sidestand Switch
19. Vehicle-down Sensor
20. Starter Relay
21. Main Fuse 30A
22. Battery
23. Ignition Fuse 10 A
24. ECU Fuse 10 A
25. Engine Ground
26. Relay Box
27. Diodes
28. Frame Ground 3

Downloaded from www.vulcanriders-sweden.org

Starter Motor

Starter Motor Removal

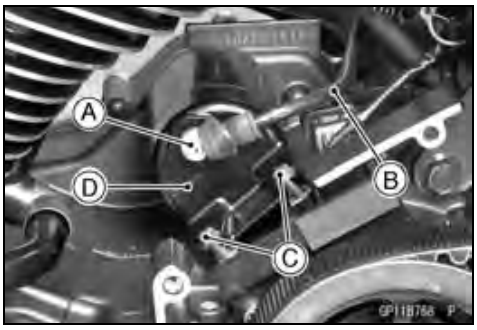

- Remove:
  Engine Pulley Inner Cover (see Engine Pulley Inner Cover Removal in the Final Drive chapter)
  Starter Motor Terminal Nut [A] and Cable [B]
  Starter Motor Mounting Bolts [C]
- Pull out the starter motor [D].

CAUTION

Never drop the starter motor, especially on a hard surface. Such a shock to the motor can damage it.

Starter Motor Installation

CAUTION

Do not tap the starter motor body. Tapping the body could damage the motor.



- Replace the O-ring [A] with a new one.
- Apply grease to the new O-ring.

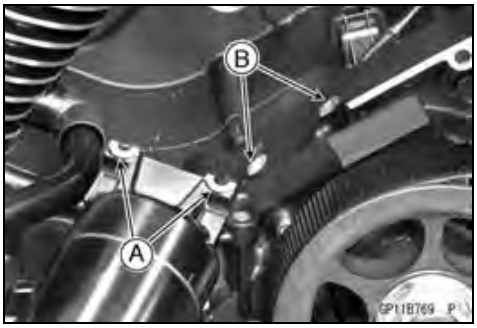

- Clean the starter motor legs [A] and crankcase [B] where the starter motor is grounded.
- Apply a non-permanent locking agent to the threads of the starter motor mounting bolts, and tighten them.

  Torque - Starter Motor Mounting Bolts: 9.8 N·m (1.0 kgf·m, 87 in·lb)

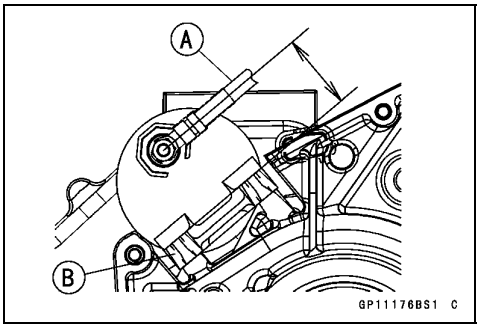

- Install the starter motor cable [A] so that it is parallel to the starter motor legs [B].

  Torque - Starter Motor Terminal Nut: 5.9 N·m (0.60 kgf·m, 52 in·lb)

- Install the removed parts (see appropriate chapters).

Downloaded from www.vulcanriders-sweden.org

Starter Motor

Starter Motor Disassembly

- Remove the starter motor (see Starter Motor Removal).
- Take off the starter motor through bolts [A] and remove the both end covers [B].

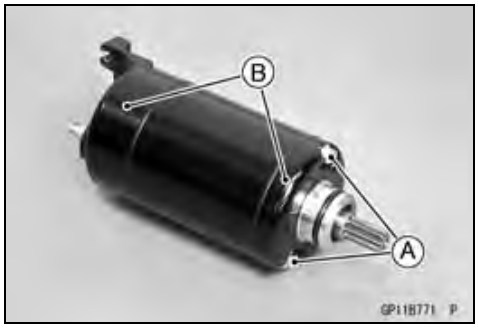

- Pull out the armature [A] out of the yoke [B].

NOTE

○*Do not remove the circlip [C] from the shaft.*

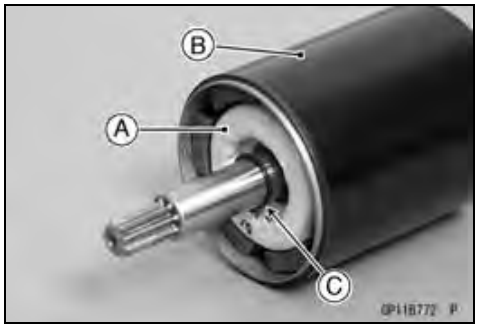

- Remove the starter motor terminal locknut [A].

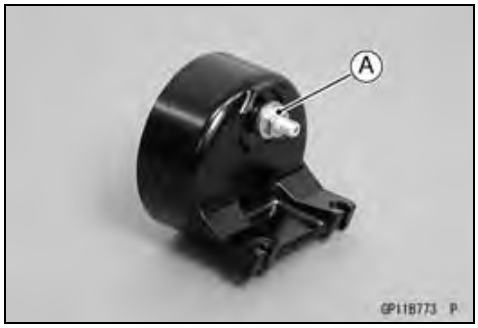

- Pull out the brushes [A] from the brush holder [B].
- Remove:
  Brush Springs [C]
  Starter Motor Terminal [D] with Brush
  Screw [E]
  Brush Holder with Brushes

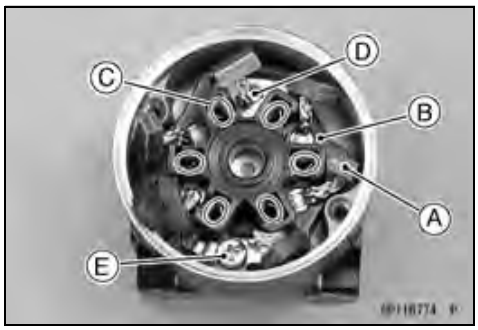

Starter Motor Assembly

- Be sure that the stopper [A] is in position.
- Align the hole [B] of the brush holder [C] with the hole [D] of the end cover [E].
- Tighten the screw securely.

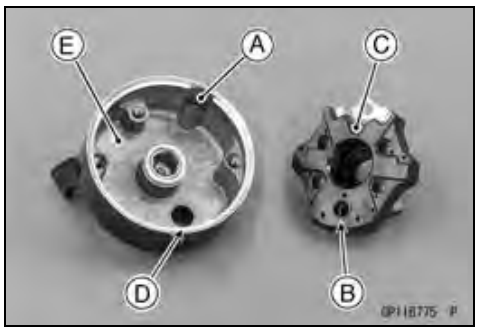

Downloaded from www.vulcanriders-sweden.org

Starter Motor

● Replace the O-ring [A] with a new one.
● Install the starter motor terminal [B] together with the following parts.
New O-ring
Collar [C]
Washer [D]
Starter Motor Terminal Locknut [E]
○Install the collar so that stepped side faces outward.
● Tighten:

Torque - Starter Motor Terminal Locknut: 11 N·m (1.1 kgf·m, 97 in·lb)

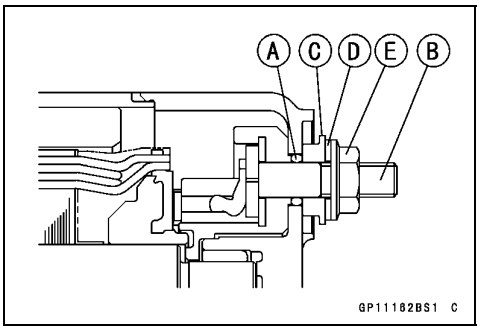

● Install the brush springs [A] and insert the brushes [B].

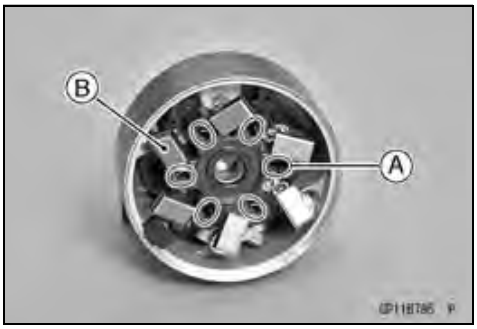

● Apply thin coat of grease to the oil seal [A].

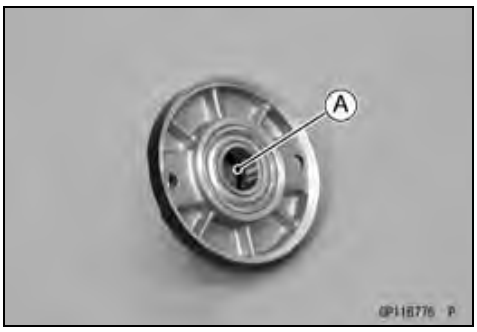

● Replace the O-rings [A] with new ones.
● Insert the armature [B] so that commutator side [C] faces hollow side [D] of the yoke [E].

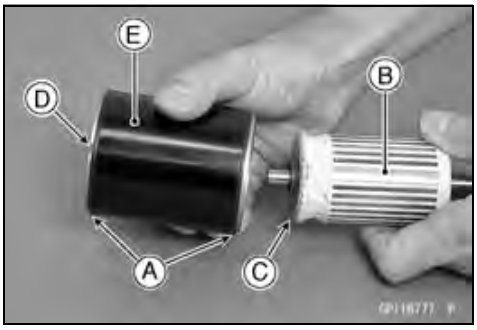

● Install the end cover [A] so that the stopper [B] is aligned with the hollow [C] of the yoke.

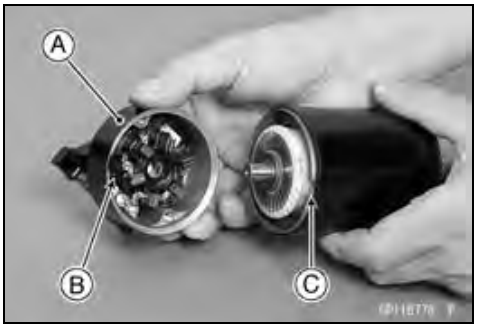

Downloaded from www.vulcanriders-sweden.org

Starter Motor

● Replace the O-rings [A] with new ones.
● Install the end cover [B] and tighten the through bolts [C].

Torque - Starter Motor Through Bolts: 5.0 N·m (0.51 kgf·m, 44 in·lb)

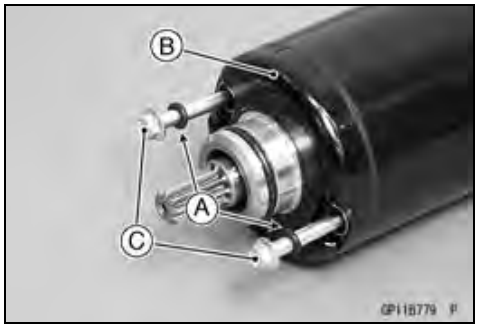

Brush Inspection

● Measure the length of each brush [A].
★If any is worn down to the service limit, replace the brush assy.

Starter Motor Brush Length
Standard: 12 mm (0.47 in.)
Service Limit: 6.5 mm (0.26 in.)

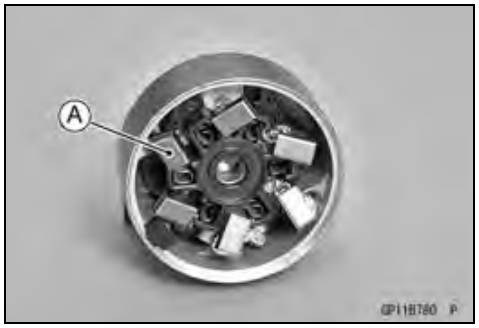

Commutator Cleaning and Inspection

● Clean the metallic debris off the between commutator segments [A].

NOTE

○*Do not use emery or sand paper on the commutator.*

● Check the commutator for damage or abnormal wear.
★Replace the starter motor with a new one if there is any damage or wear.
● Visually inspect the commutator segments for discoloration.
★Replace the starter motor with a new one if discoloration is noticed.

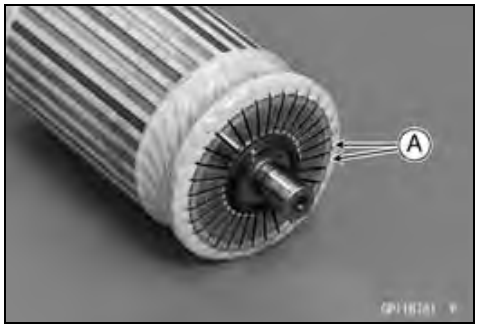

Armature Inspection

● Using the × 1 Ω hand tester range, measure the resistance between any two commutator segments [A].

Special Tool - Hand Tester: 57001-1394

★If there is a high resistance or no reading (∞) between any two segments, a winding is open and the starter motor must be replaced.
● Using the highest hand tester range, measure the resistance between the segments and the shaft [B].
★If there is any reading at all, the armature has a short and the starter motor must be replaced.

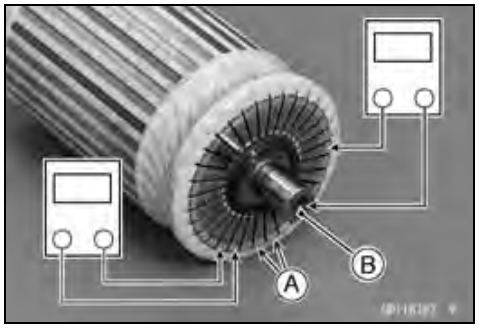

NOTE

○*Even if the foregoing checks show the armature to be good, it may be defective in some manner not readily detectable with the hand tester. If all other starter motor and starter motor circuit components check good, but the starter motor still does not turn over or only turns over weakly, replace the starter motor with a new one.*

Downloaded from www.vulcanriders-sweden.org

Starter Motor

Brush Lead Inspection

- Using the × 1 Ω hand tester range, measure the resistance as shown.
  Terminal Bolt and Positive Brushes [A]
  End Cover and Negative Brushes [B]

Special Tool - Hand Tester: 57001-1394

★If there is not close to zero ohms, the brush lead has an open. Replace the brush plate assy.

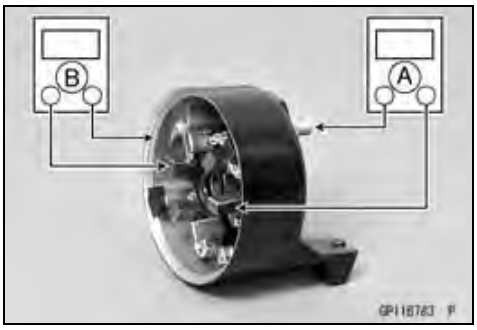

Right-hand End Cover Inspection

- Using the highest hand tester range, measure the resistance as shown.
  Terminal Bolt and End Cover [A]
  Terminal Bolt and Negative Brushes [B]

Special Tool - Hand Tester: 57001-1394

★If there is any reading, the brush assy and/or terminal bolt assy have a short. Replace the starter motor.

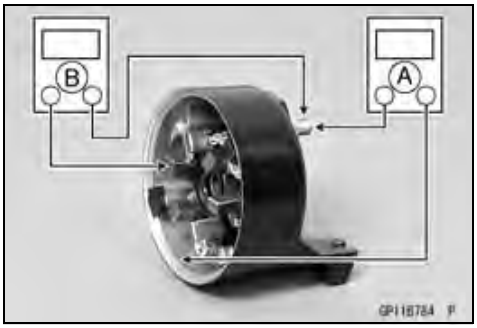

Starter Relay Inspection

- Remove the battery negative (–) cable from the battery negative (–) terminal (see Battery Removal)
- Pull out the fuse box [A] and starter relay [B] from the battery case.

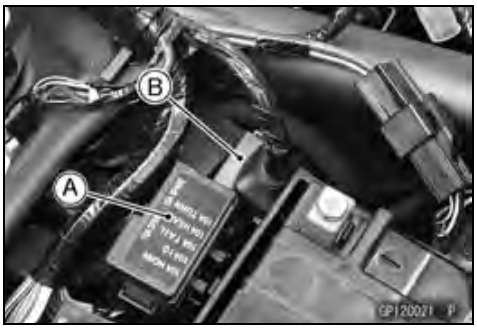

- Remove the starter motor cable [A] and battery positive (+) cable [B]
- Disconnect the connector [C]

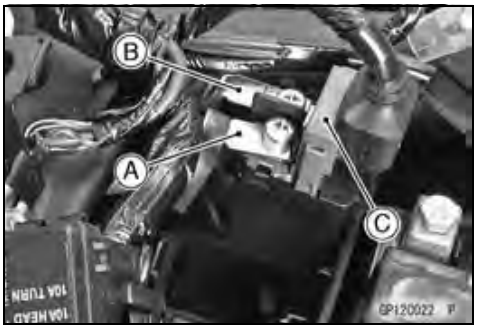

- Connect the hand tester [A] and 12 V battery [B] to the starter relay [C] as shown.

★If the relay does not work as specified, the relay is defective. Replace the relay.

Testing Relay

Tester Range: × 1 Ω range

Criteria: When battery is connected → 0 Ω

When battery is disconnected → ∞ Ω

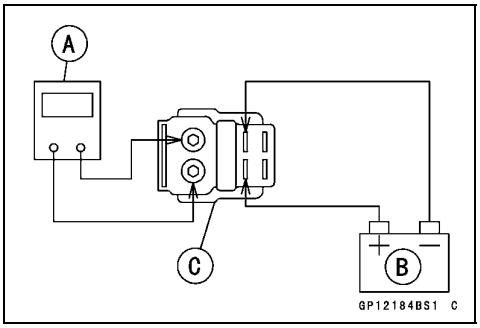

Downloaded from www.vulcanriders-sweden.org

Starter Motor

Electric Starter Circuit

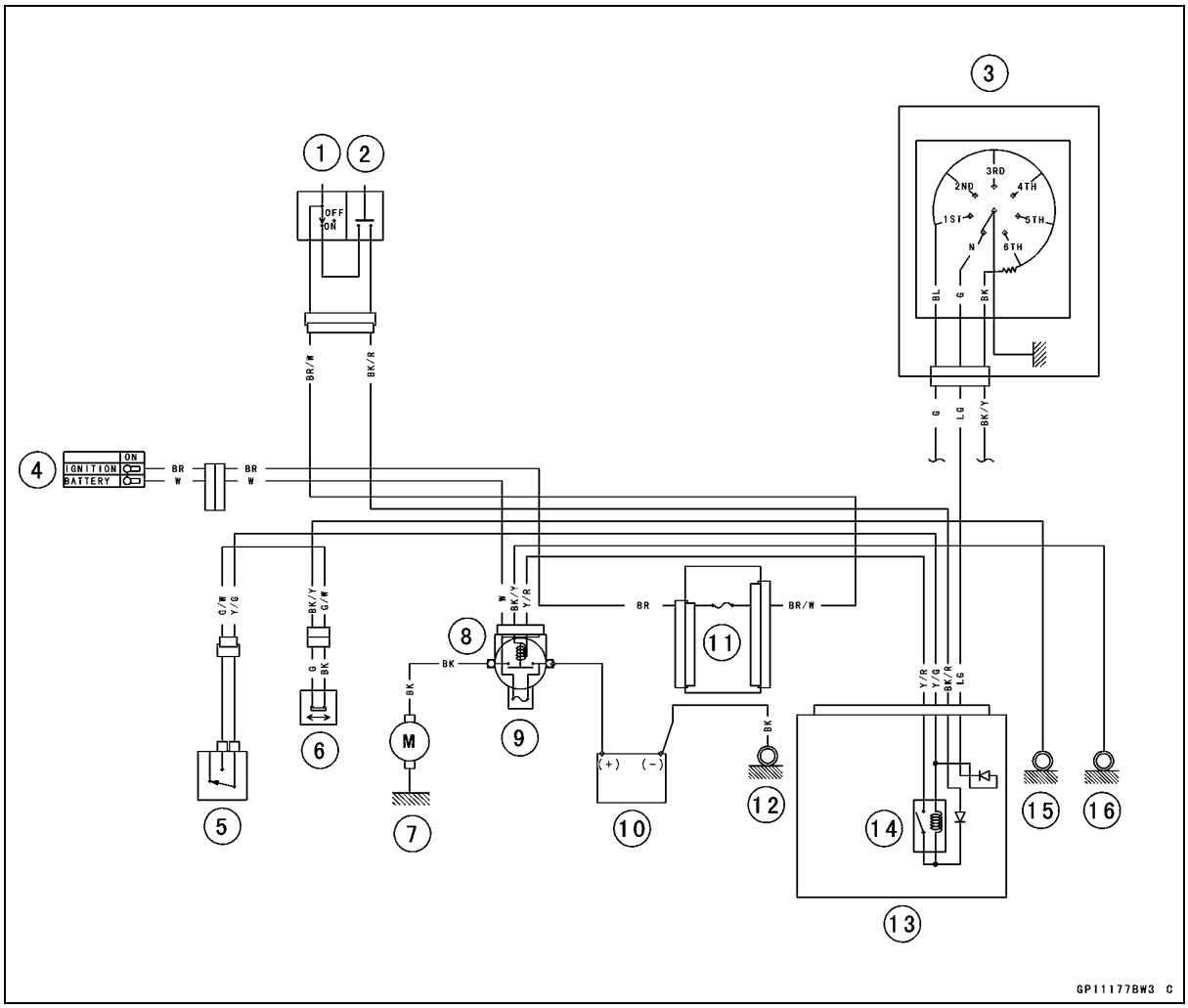

1. Engine Stop Switch
2. Starter Button
3. Gear Position Switch
4. Ignition Switch
5. Starter Lockout Switch
6. Sidestand Switch
7. Starter Motor
8. Starter Relay
9. Main Fuse 30 A
10. Battery
11. Ignition Fuse 10 A
12. Engine Ground
13. Relay Box
14. Starter Circuit Relay
15. Frame Ground 3
16. Frame Ground 4

Downloaded from www.vulcanriders-sweden.org

Lighting System

This motorcycle adopts the daylight system and has a headlight relay in the relay box. The headlight does not go on when the ignition switch and the engine stop switch are first turned on. The headlight comes on after the starter button is released and stays on until the ignition switch is turned off. The headlight will go out momentarily whenever the starter button is pressed and come back on when the button is released.

Headlight Beam Horizontal Adjustment

- Refer to the Headlight Aiming Inspection in the Periodic Maintenance chapter.

Headlight Beam Vertical Adjustment

- Refer to the Headlight Aiming Inspection in the Periodic Maintenance chapter.

Headlight Bulb Replacement

- Remove the headlight rim screws [A] on both sides.



- Remove the headlight unit [A] and disconnect the headlight connector [B].
- Remove the headlight dust cover [C].

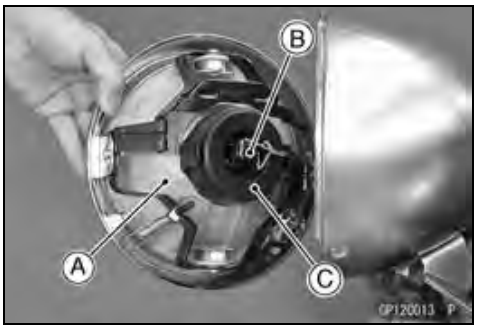

- Remove:
  Hook [A]
  Headlight Bulb [B]

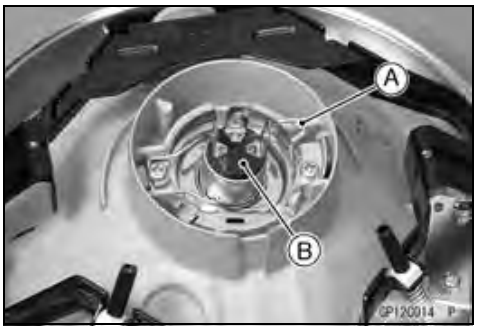

CAUTION

When handling the quartz-halogen bulb, never touch the glass portion with bare hands. Always use a clean cloth. Oil contamination from hands or dirty rags can reduce bulb life or cause the bulb to explode.

NOTE

○*Clean off any contamination that inadvertently gets on the bulb with alcohol or a soap and water solution.*

Downloaded from www.vulcanriders-sweden.org

Lighting System

- Replace the headlight bulb.
- Fit the projections [A] of the bulb in the hollows [B] of the headlight.

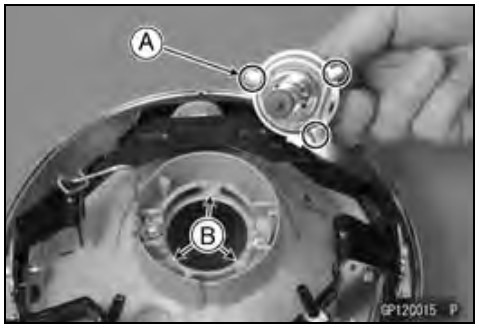

- Install the hook [A].



- Fit the dust cover [A] with the TOP mark [B] upward onto the bulb [C] firmly as shown.
  Good [D]
  Bad [E]

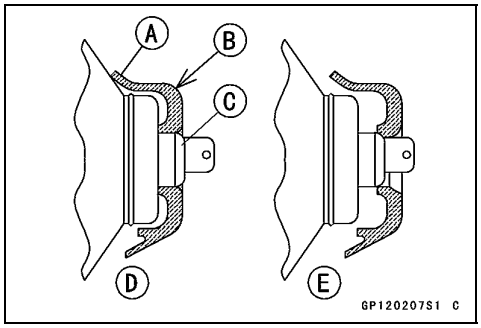

- After installation, adjust the headlight aim (see Headlight Aiming Inspection in the Periodic Maintenance chapter).

Headlight Body Removal

- Remove the headlight unit (see Headlight Bulb Replasement).
- Remove the rubber cover [A] and open the clamp [B].
- Remove the headlight body bolts [C], then take off the body [D].



Downloaded from www.vulcanriders-sweden.org

Lighting System

City Light Bulb Replacement (EUR Models)

- Remove the headlight unit (see Headlight Bulb Replasement).
- Pull out the socket [A] together with the bulb.

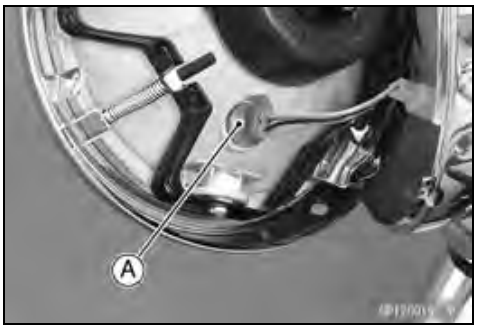

- Remove the wedge-base type bulb [A], pull the bulb straight out of the socket [B].

CAUTION

Do not turn the bulb. Pull the bulb out to prevent damage to the bulb. Do not use bulb rated for greater wattage than the specified value.

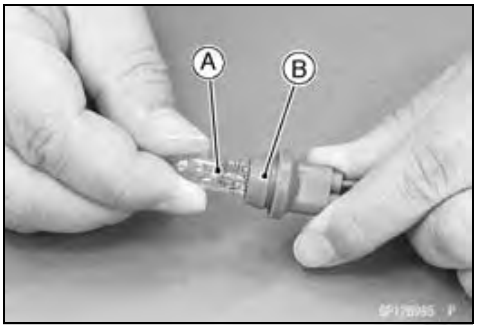

- Replace the bulb with a new one.

Tail/Brake Light (LED) Removal

- Remove:
  Rear Fender (see Rear Fender Removal in the Frame chapter)
  Bolts [A]
  Cover [B]

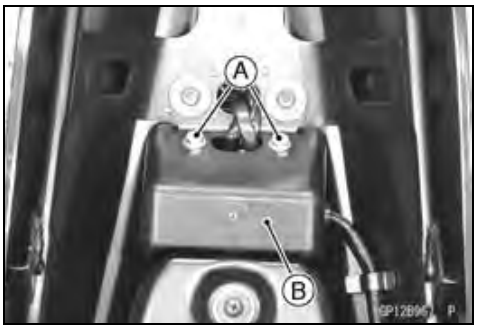

- Take out the tail/brake light lead connector [A] from the cover [B] and disconnect it.
- Remove:
  Screws [C] and Washers

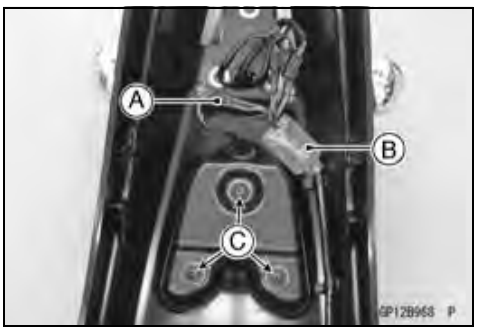

- Remove:
  Screws [A]
  Tail/Brake Light Cover [B]
  Tail/Brake Light [C]

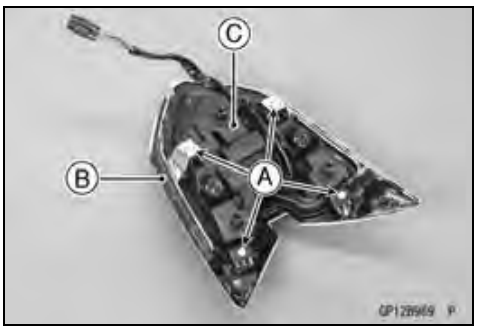

Tail/Brake Light (LED) Installation

- Installation is basically the reverse of removal.

Downloaded from www.vulcanriders-sweden.org

Lighting System

Licence Plate Light Bulb Replacemrnt

- Remove:
  Bolts [A]
  Cover [B]

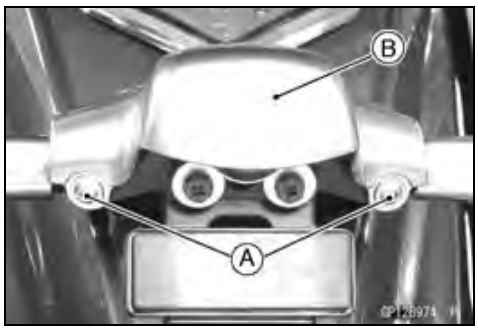

- Remove:
  License Plate Light Lens Screws [A]
  License Plate Light Lens [B]

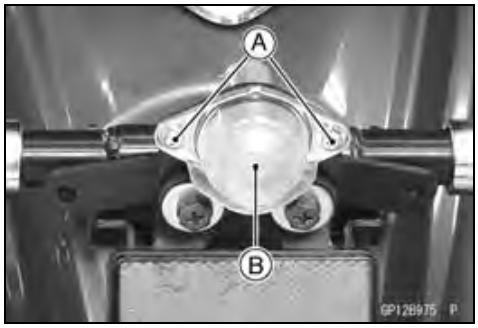

- Push and turn the bulb [A] counterclockwise [B] and remove it.
- Replace the bulb with a new one.

CAUTION
Do not use bulbs rated for greater wattage than the specified value.

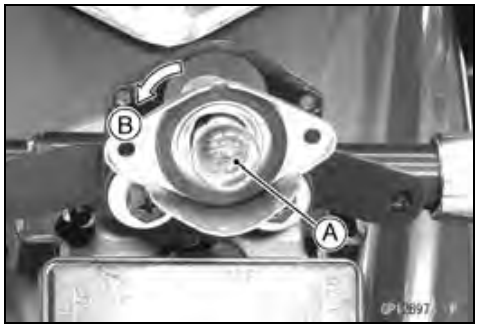

- Insert the new bulb [A] by aligning its pins [B] with the grooves [C] in the socket, and turn the bulb clockwise about 15°.

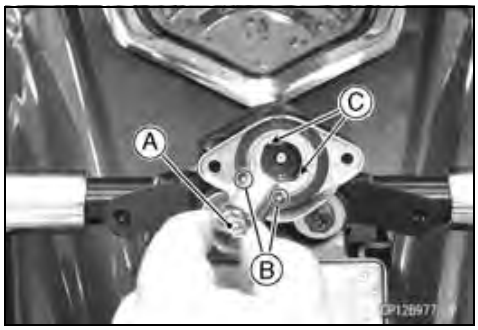

- Install:
  Licence Plate Light lens [A]
  License Plate Light Lens Screws [B]
- Tighten:

  Torque - License Plate Light Lens Screws: 0.9 N·m (0.09 kgf·m, 8 in·lb)

- Install the removed parts.

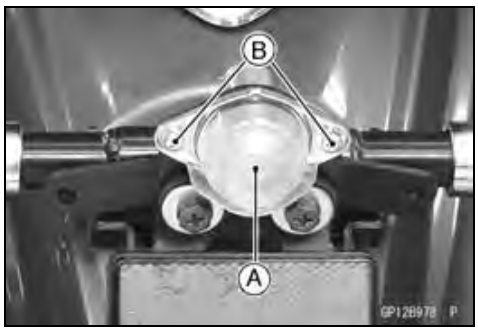

Downloaded from www.vulcanriders-sweden.org

Lighting System

Headlight/Tail Light Circuit

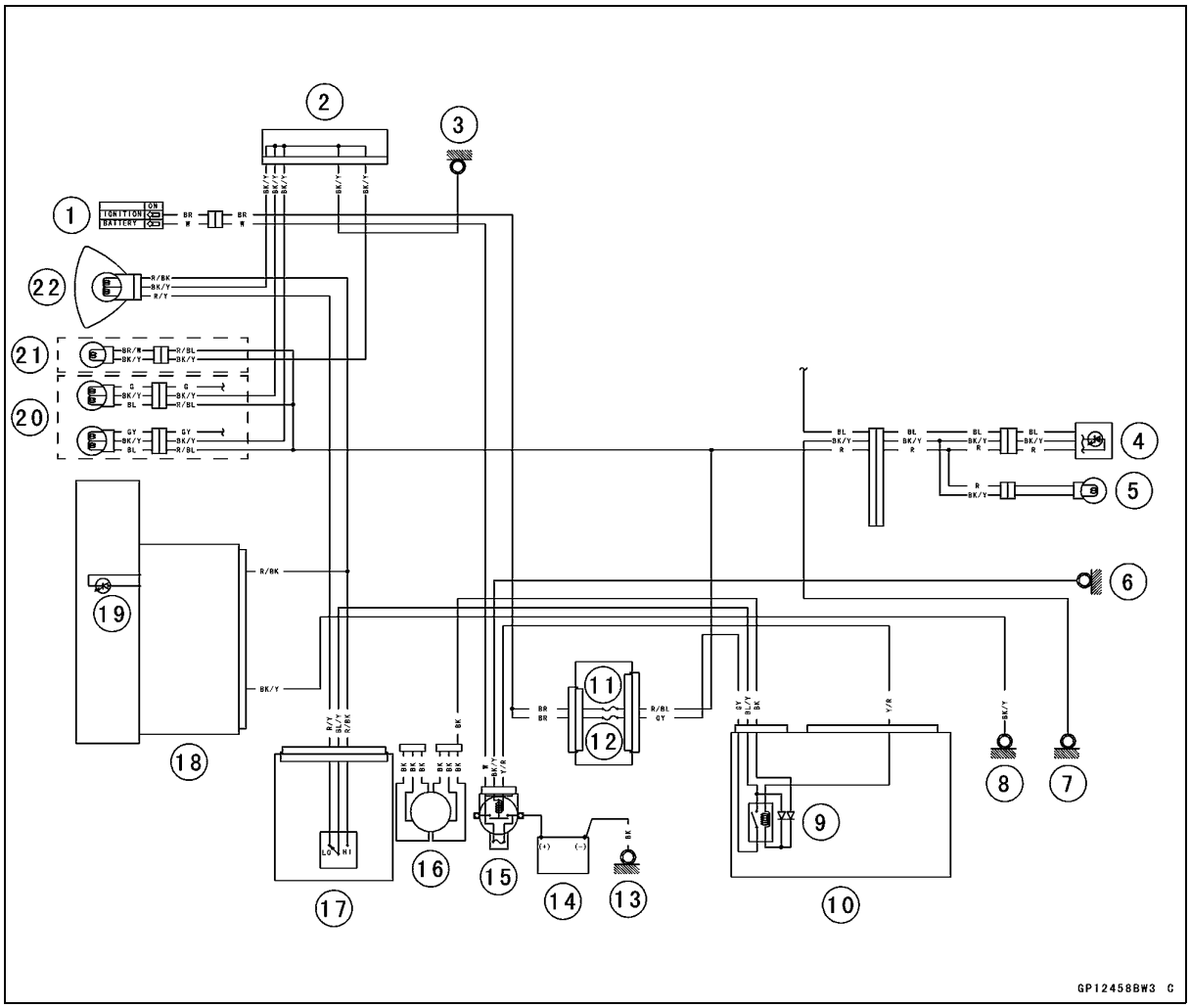

1. Ignition Switch
2. Joint Connector 1
3. Frame Ground 1
4. Tail/Brake Lights (LED)
5. License Plate Light 12 V 5 W
6. Frame Ground 4
7. Frame Ground 5
8. Frame Ground 3
9. Headlight Relay
10. Relay Box
11. Taillight Fuse 10 A
12. Headlight Fuse 10 A
13. Engine Ground
14. Battery
15. Main Fuse 30 A
16. Alternator
17. Dimmer Switch
18. Meter Unit
19. High Beam Indicator Light (LED)
20. Running Position Lights 12 V 21/5 W (US, CA and CAL Models)
21. City Light 12 V 5 W (EUR Models)
22. Headlight

Downloaded from www.vulcanriders-sweden.org

Automatic Turn Signal Canceling System

Automobiles use a turn signal canceling system actuated by steering wheel turn. But, motorcycles turn with a bank additionally, and so have a smaller steer angle. This makes difficult to adopt an automobile type turn signal canceling system because of inaccurate operation in motorcycles. So, motorcycles adopt time & distance counting system.

The canceling system consists of a battery, turn signal control relay, distance sensor, and turn signal switch. When the turn signal switch is pushed onto the right or left, the turn signals start flashing and the control relay starts counting off **8 seconds**. At the end of this time, the control relay starts calculating distance traveled using pulses from the distance sensor in the speedometer. The control relay keeps working even after the turn signal switch was released and returned to the neutral position by spring force. When the motorcycle has traveled an additional **65 meters (213 foots)**, the control relay shuts off the current, turns off the turn signal lights, and resets itself.

★If the turn signal canceling system does not function properly, first check on the turn signal light and switch in Second Step section in Lights and Switches Operation in the Periodic Maintenance chapter.

● Next, inspect the following parts.
Turn Signal Control Relay
Distance Sensor (in Meter Unit) System

Turn Signal Control Relay Inspection

CAUTION
Never drop the turn signal control relay, especially on a hard surface. Such a shock to the unit can damage it.

● Remove:
Battery Case Cover (see Battery Removal)
Turn Signal Control Relay [A]



● Connect one 12 V battery and turn signal lights as indicated in the figure, and count how many times the lights flash for one minute.
Turn Signal Control Relay Connector [A]
Turn Signal Lights [B]
12 V Battery [C]

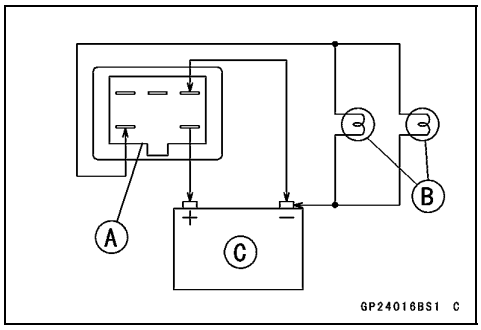

★If the lights do not flash as specified, replace the turn signal control relay.
★If the lights flash as specified, inspect the distance sensor system (see Distance Sensor System Inspection).

Testing Turn Signal Control Relay Inspection

Load		Flashing Times (c/m*)
The Number of Turn Signal Lights	Wattage (W)	
1**	21 ~ 23	140 ~ 250
2	42 ~ 46	75 ~ 95

(*): Cycle(s) per minute
(**): Corresponds to “one light burned out”

Downloaded from www.vulcanriders-sweden.org

Automatic Turn Signal Canceling System

Distance Sensor System Inspection

● Remove:
Battery Case Cover (see Battery Removal)
Turn Signal Control Relay
○Do not disconnect the connector.
● Use the jack to lift the rear wheel (see Rear Wheel Removal in the Wheel/Tires chapter).

Special Tool - Jack: 57001-1238

● Set the hand tester [A] to the DC 25 V range and connect it to the LB lead terminal [B] and battery (–) terminal [C] as shown.

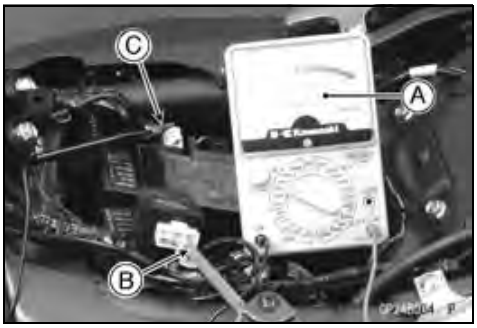

Connections
Hand Tester (+) → LB Lead Terminal
Hand Tester (–) → Battery (–) Terminal

● Turn the rear wheel slowly to see that the tester's pointer fluctuates repeated by reading 0.5 V and 12 V.
★If the tester's pointer fluctuates, distance sensor is normal.
★If the tester's pointer does not fluctuate, inspect the following parts.
Speed Sensor (see Speed Sensor Output Voltage Inspection in the Fuel System (DFI) chapter)
Speed Signal Inspection (see Meter Unit Inspection)
Harness (see Wiring Inspection)
★If the above parts are good, replace the turn signal control relay.

Turn Signal Light Bulb Replacement

● Remove:
Turn Signal Light Lens Screw [A]



● Turn the lens [A] counterclockwise and remove the turn signal light assembly.

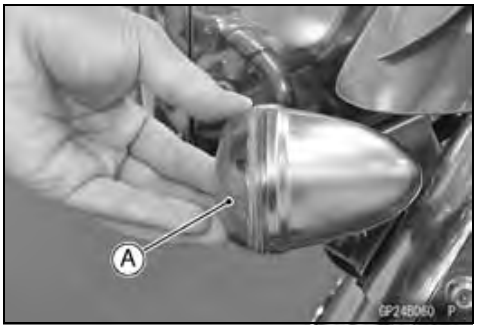

Downloaded from www.vulcanriders-sweden.org

Automatic Turn Signal Canceling System

- Remove:
  Screw [A]
  Socket Assembly [B]

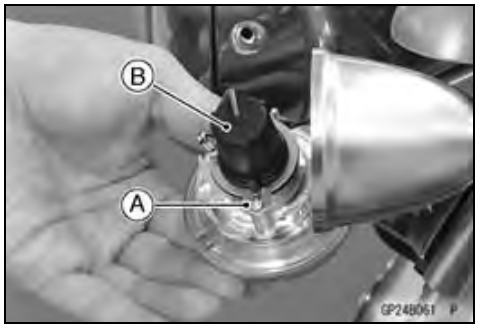

- Push and turn the bulb [A] counterclockwise [B] and remove it.
- Replace the bulb with a new one.

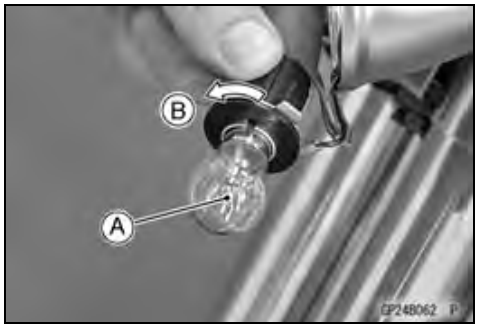

- Insert the new bulb [A] by aligning its upper and lower pins [B] with the upper and lower grooves [C] in the socket, and turn the bulb clockwise about 15°.

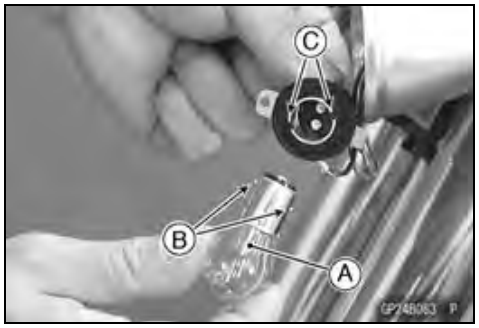

- Insert the projection [A] of the socket into the groove in the lens assembly.
- Tighten the screw [B].

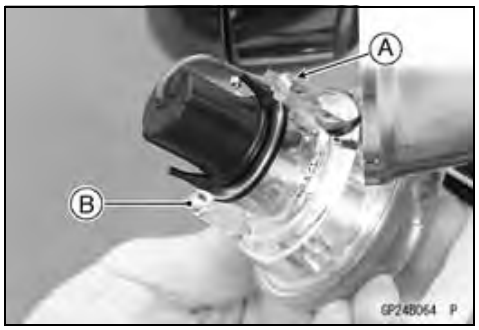

- Position the leads [A] inside the pins [B] as shown.

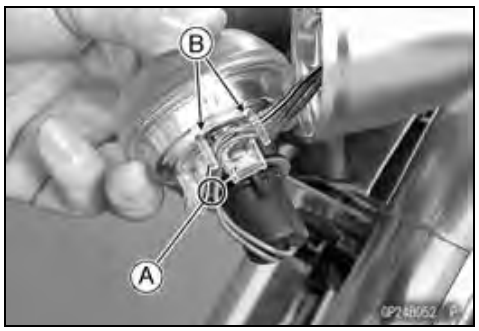

Downloaded from www.vulcanriders-sweden.org

Automatic Turn Signal Canceling System

- Insert the lens [A] by aligning projections [B] with the grooves [C] and turn the lens clockwise until it is stopped.
- Tighten the screw.

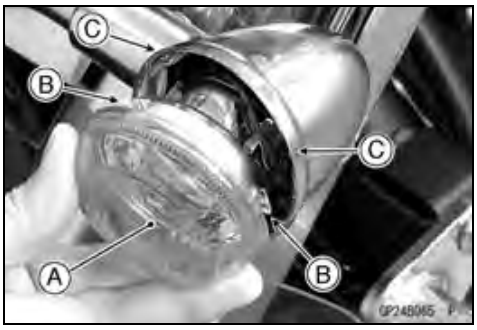

Downloaded from www.vulcanriders-sweden.org

Automatic Turn Signal Canceling System

Turn Signal Cancelling System Circuit

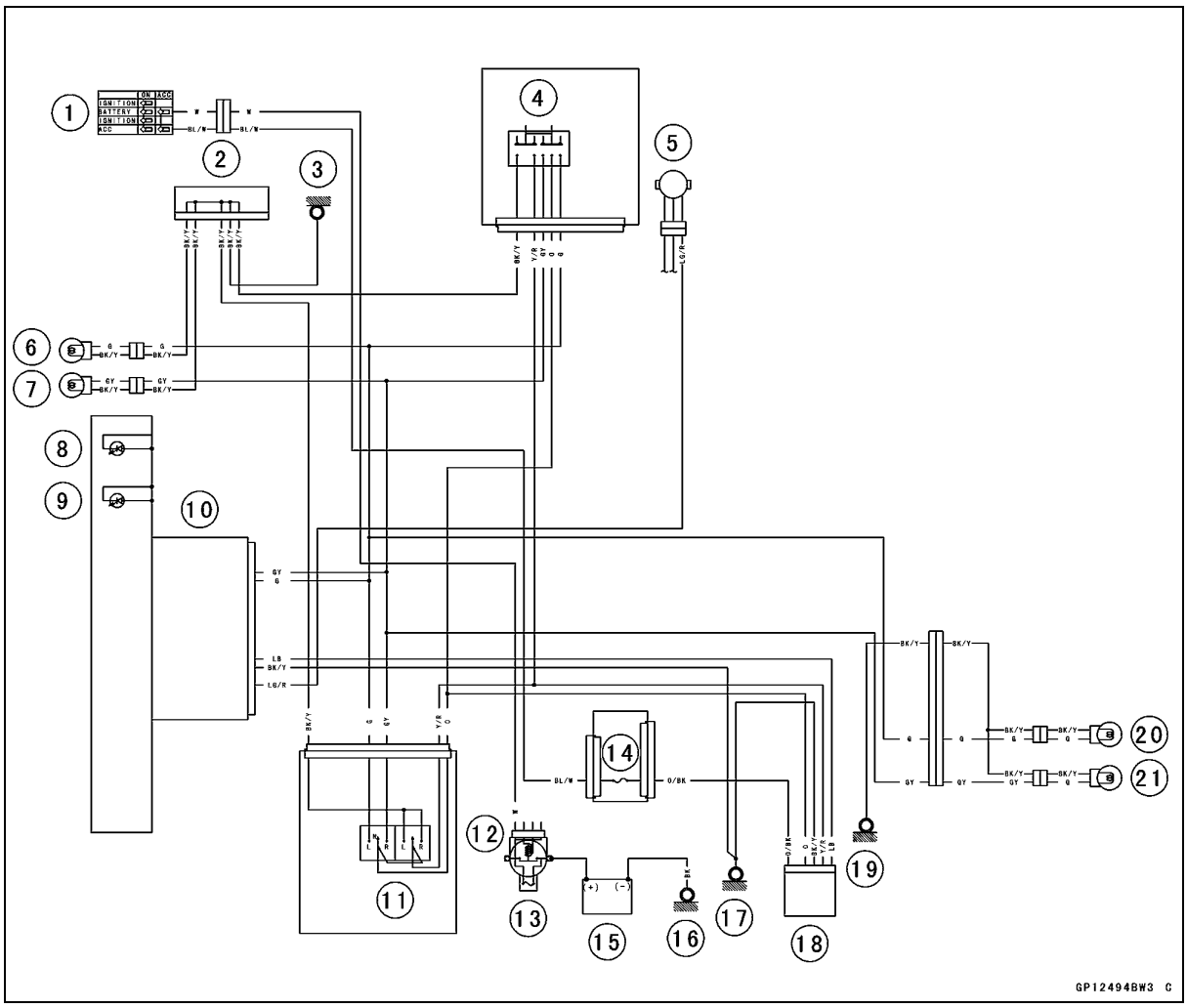

1. Ignition Switch
2. Joint Connector 1
3. Frame Ground 1
4. Hazard Button
5. Speed Sensor
6. Front Left Turn Signal Light 12 V 21 W
7. Front Right Turn Signal Light 12 V 21 W
8. Left Turn Signal Indicator Light (LED)
9. Right Turn Signal Indicator Light (LED)
10. Meter Unit
11. Turn Signal Switch
12. Starter Relay
13. Main Fuse 30 A
14. Turn Signal Control Relay Fuse 10 A
15. Battery
16. Engine Ground
17. Frame Ground 3
18. Turn Signal Control Relay
19. Frame Ground 5
20. Rear Left Turn Signal Light 12 V 21 W
21. Rear Right Turn Signal Light 12 V 21 W

Downloaded from www.vulcanriders-sweden.org

Air Switching Valve

Air Switching Valve Operation Test

● Refer to the Air Suction System Damage Inspection in the Periodic Maintenance chapter.

Air Switching Valve Unit Test

● Remove the air switching valve (see Air Switching Valve Removal in the Engine Top End chapter).

● Set the hand tester [A] to the × 1 Ω range and connect it to the air switching valve terminals as shown in the figure.

Special Tool - Hand Tester: 57001-1394

Air Switching Valve Resistance
Standard: 18 ~ 22 Ω at 20°C (68°F)

★If the resistance reading is out of the specified value, replace it with a new one.

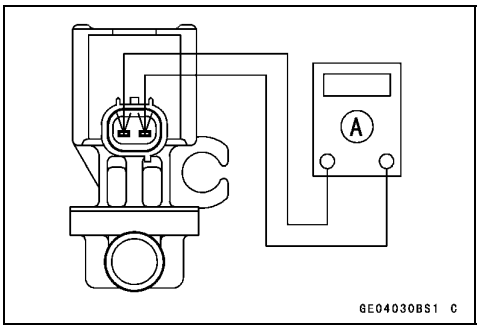

● Connect the 12 V battery [A] to the air switching valve terminals as shown.

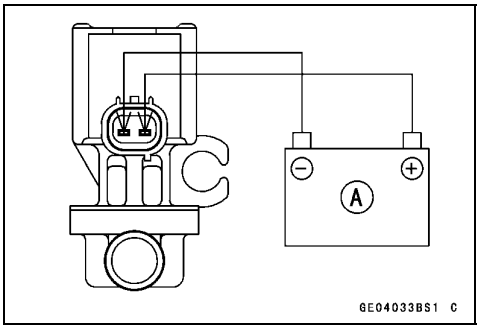

● Blow the air to the inlet air duct [A], and make sure does not flow the blown air from the outlet air ducts [B].

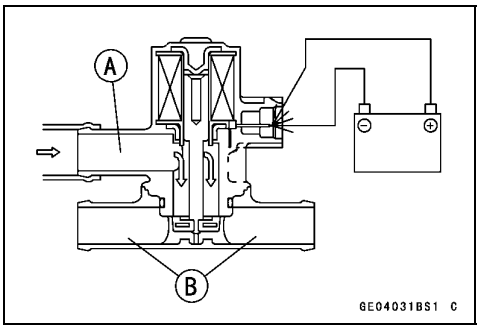

● Disconnect the 12 V battery.

● Blow the air to the inlet air duct [A] again, and make sure flow the blown air from the outlet air ducts [B].

★If the air switching valve dose not operate as described, replace it with a new one.

NOTE

○*To check air flow through the air switching valve, just blow through the air switching valve hose (inlet side) [C].*

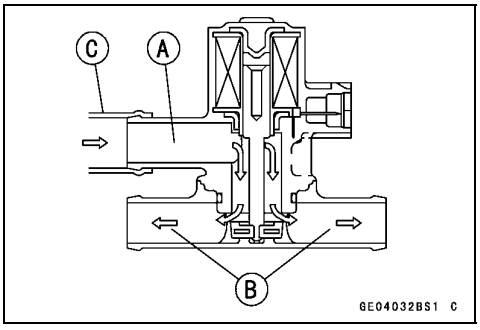

Downloaded from www.vulcanriders-sweden.org

Air Switching Valve

Air Switching Valve Circuit

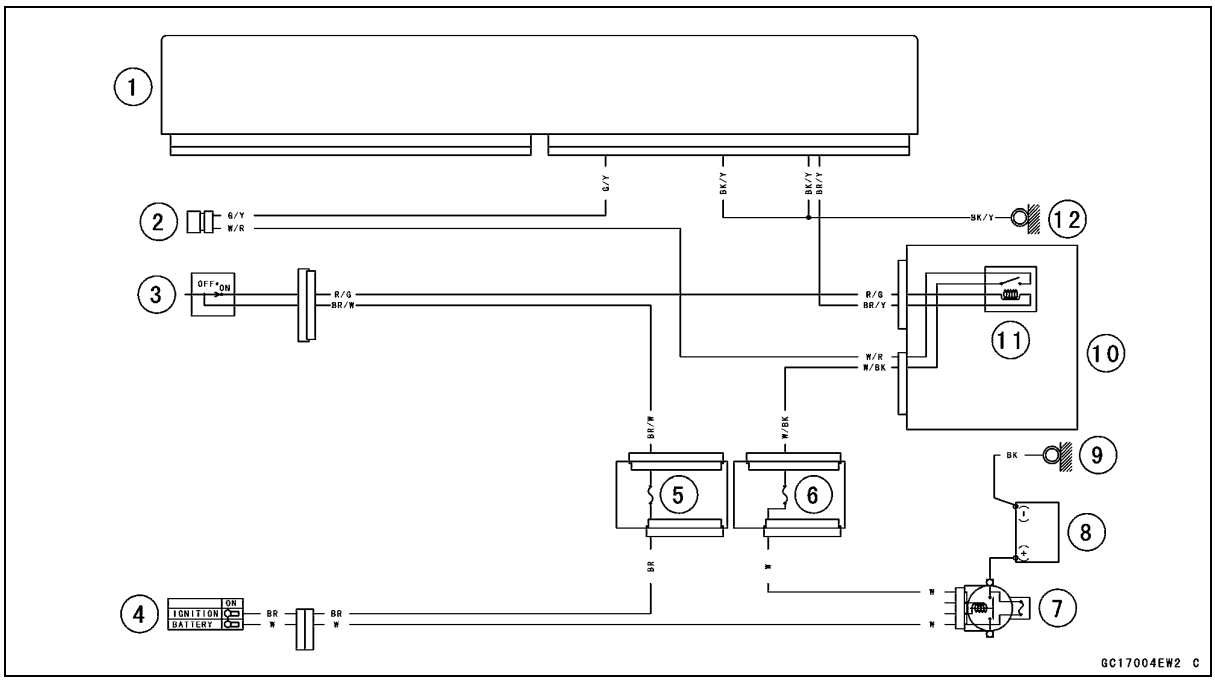

1. ECU
2. Air Switching Valve
3. Engine Stop Switch
4. Ignition Switch
5. Ignition Fuse 10 A
6. ECU Fuse 10 A
7. Main Fuse 30 A
8. Battery
9. Engine Ground
10. Relay Box
11. Fuel Pump Relay
12. Frame Ground 3

Downloaded from www.vulcanriders-sweden.org

Radiator Fan System

Fan System Circuit Inspection

● Remove:
Front Seat (see Front Seat Removal in the Frame chapter)
Battery Case Cover (see Battery Removal)
● Take out the relay box [A] from battery case.
● Disconnect the 4-pin connector [B]

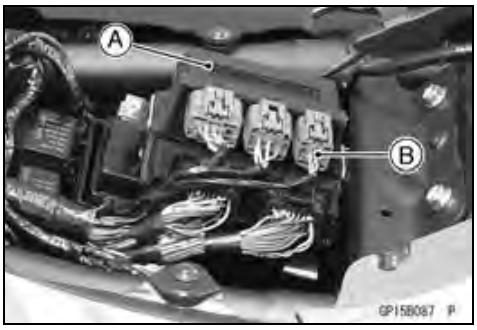

● Using an auxiliary leads [A], connect G and BL/W terminals in the relay box lead connector [B] of the harness side.

NOTE

○*The ignition switch need not be turned on.*

★If the fan does not rotate, inspect the following.
Main Fuse 30 A and Fan Fuse 10 A (see Fuse Inspection)
Fan Motor (see Fan Motor Inspection)
★When the fan system is abnormal even if the above inspection is normal, check the following items.
Water Temperature Sensor (see Water Temperature Sensor Inspection)
Fan Relay (see Relay Circuit Inspection)
Wiring (see Wiring Inspection)
★If their parts are normality, replace the ECU (see ECU Removal/Installation in the Fuel System (DFI) chapter).

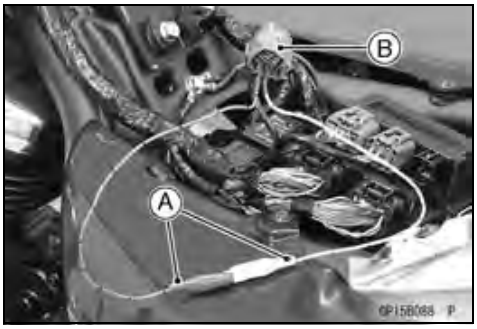

Fan Motor Inspection

● Remove:
Right Footboard (see Footboard Removal in the Frame chapter)
● Disconnect:
Fan Motor Lead Connector [A]

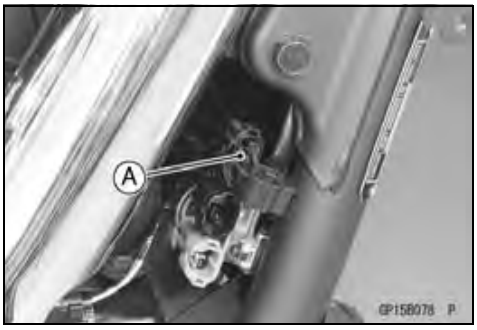

● Using an auxiliary lead, supply battery [A] power to the fan motor.
Battery (+) → BK/BL Lead Terminal
Battery (–) → BK Lead Terminal
★If the fan does not rotate, the fan motor is defective and must be replaced.

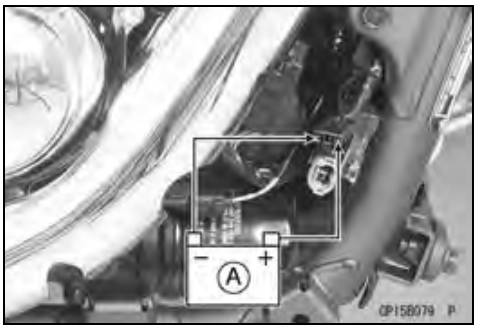

Downloaded from www.vulcanriders-sweden.org

Radiator Fan System

Radiator Fan Circuit

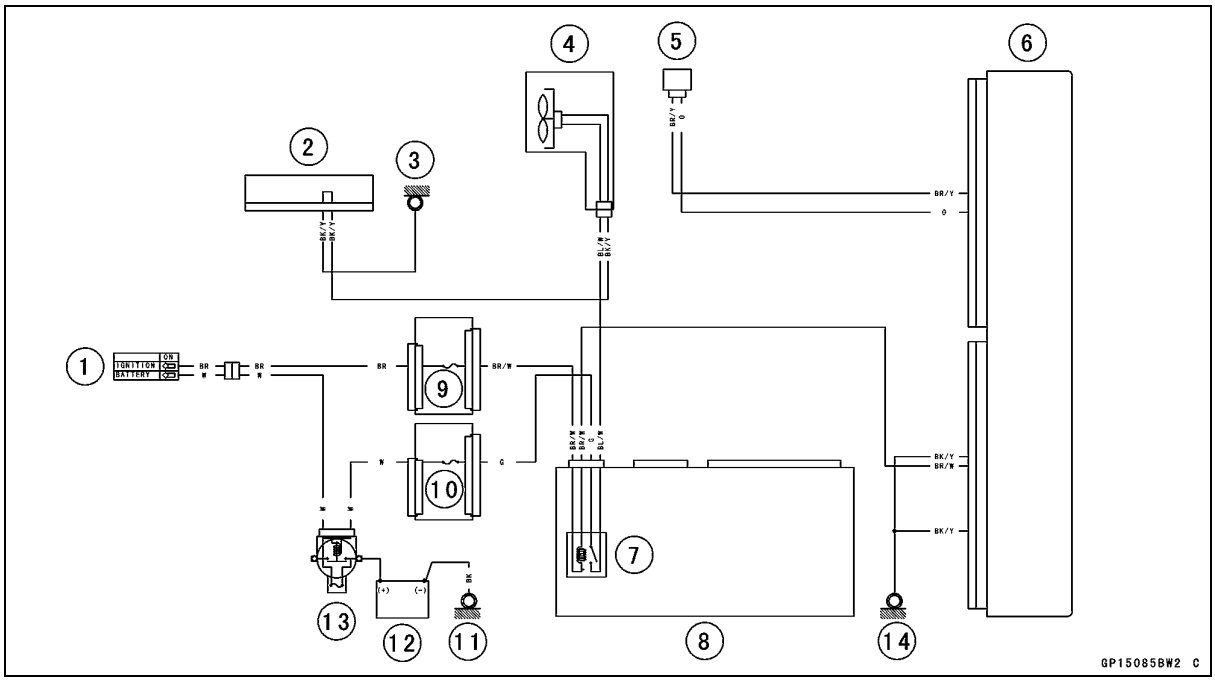

1. Ignition Switch
2. Joint Connector 1
3. Frame Ground 1
4. Fan Motor
5. Water Temperature Sensor
6. ECU
7. Fan Relay
8. Relay Box
9. Ignition Fuse 10 A
10. Fan Fuse 10 A
11. Engine Ground
12. Battery
13. Main Fuse 30 A
14. Frame Ground 3

Downloaded from www.vulcanriders-sweden.org

Meter, Gauge

Meter Unit Removal

- Remove:
  Key Cylinder Cover [A]
  Bolts [B]
  Meter Cover [C] with Meter Unit

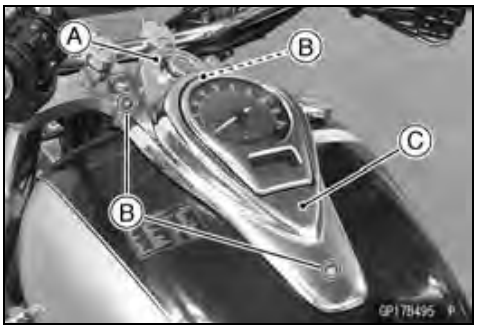

- Side the dust cover [A] and disconnect the meter unit connector.



- Remove the screws [A] and separate the meter unit [B] and cover.

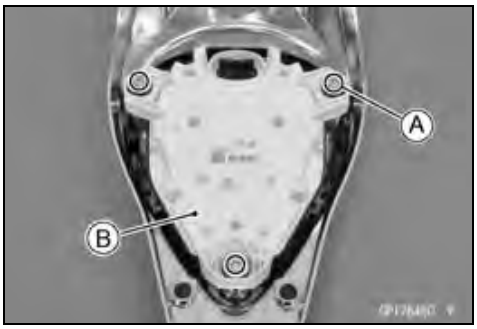

Meter Unit Installation

- Installation is basically the reverse of removal.

Meter Unit Disassembly

- Remove:
  Meter Unit (see Meter Unit Removal)
  Screws [A]
  Meter Case [B]

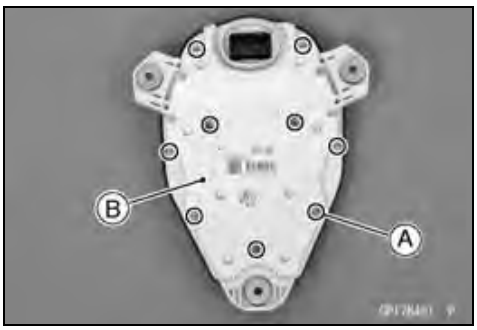

Downloaded from www.vulcanriders-sweden.org

Meter, Gauge

● Separate the meter base assembly [A] and cover [B].

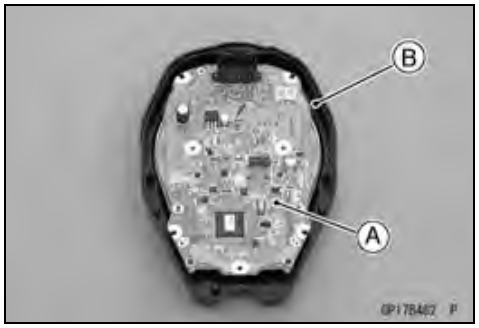

Meter Operation Inspection

NOTE

○*Be sure the battery is fully charged.*
○*Be sure the ignition switch and meter unit switch are normality (see Switch Inspection).*
○*Be sure the DFI/ETV system is normality.*
○*Be sure the wiring is normality (see Wiring Inspection).*

● Turn the ignition switch to ON.
● Check the following items.
○The needle [A] of the speedometer momentarily points its last reading and back to the minimum position.
○The all LCD segments appear for three seconds.
○The following indicator lights go on for three seconds.
Fuel Level Warning Indicator Light (LED) [B]
○The following indicator lights go on.
Cruise Control Indicator Light (LED) [C]
Cruise Control Set Indicator Light (LED) [D]
Neutral Indicator Light (LED) [E]
Warning Indicator Light (LED) [F]
○The neutral and oil pressure warning symbols appear.
★If the meter function does not work, replace the meter base. (see Meter Unit Disassembly).

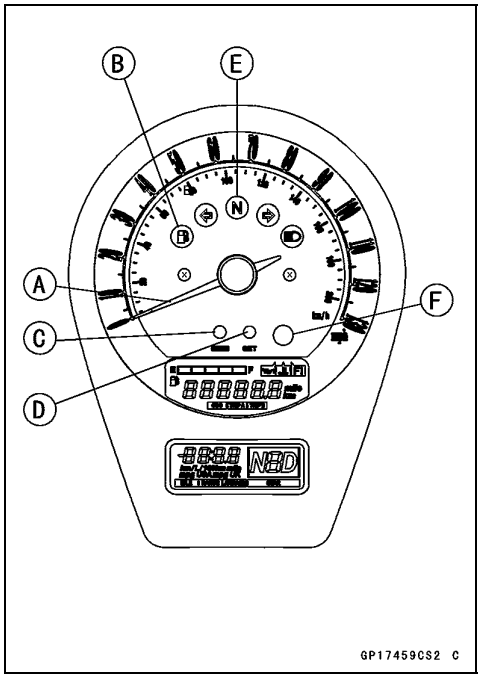

Downloaded from www.vulcanriders-sweden.org

Meter, Gauge

● By pushing the meter unit switch [A] to MODE-A position [B] each time, check that the display [C] changes as follows.

○This display is ordinary indication.

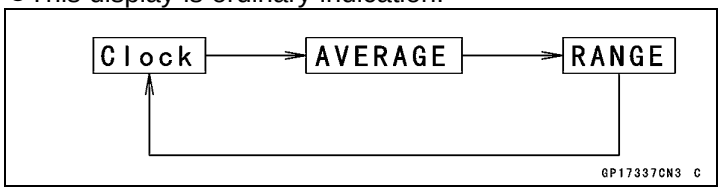

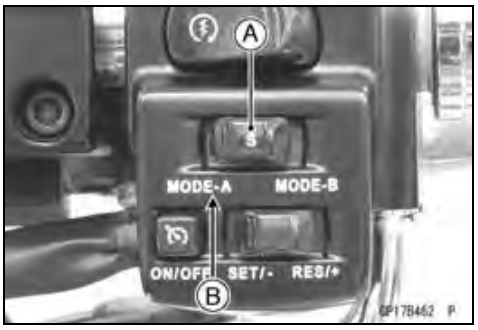

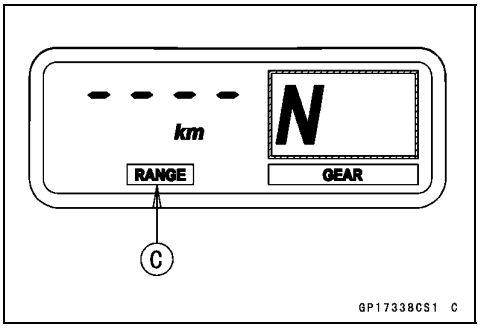

● By pushing the meter unit switch [A] to MODE-B position [B] each time, check that the display [C] changes as follows.

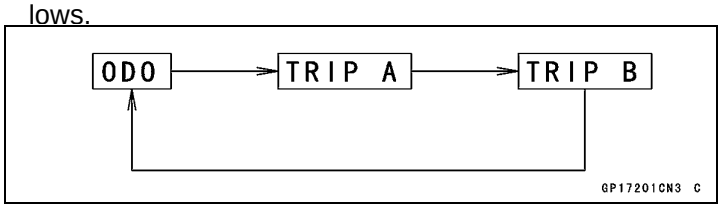

★If the display function does not work, replace the meter base (see Meter Unit Disassembly).

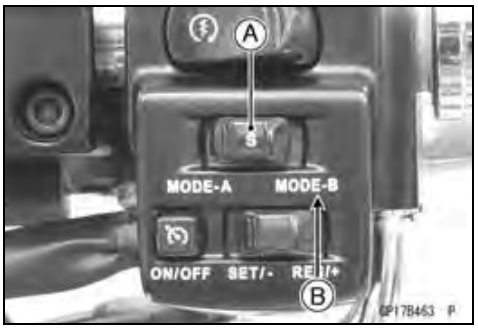

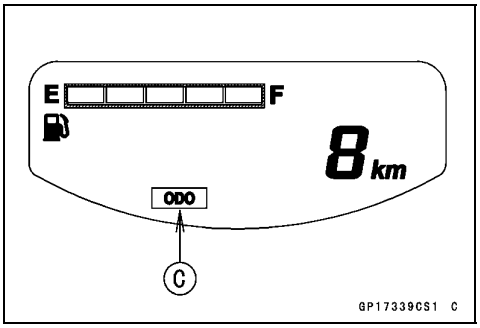

● While the ordinary indication, push and hold the meter unit switch [A] more than two seconds.



Downloaded from www.vulcanriders-sweden.org

Meter, Gauge

- Check that the display changes to the setting mode [A].
- By pushing the meter unit switch each time, check that the display changes as follows.

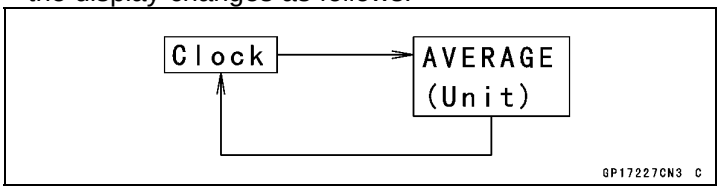

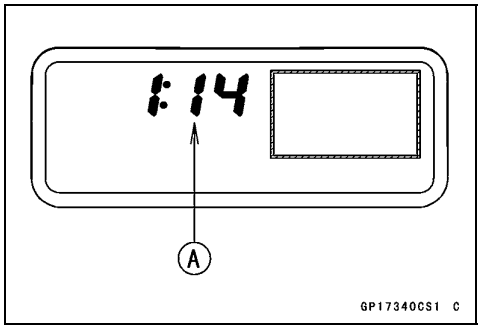

- Push and hold the meter unit switch more than two seconds.

○The display will change to the ordinary indication.

★If the display function does not work, replace the meter base (see Meter Unit Disassembly).

- Set to the setting mode, and push the meter unit switch [A] to MODE-A position [B].



- The hour display starts flashing.

○The display changes to the setting mode of the clock.

- By pushing the meter unit switch to MODE-B position each time, check that the hour display changes.

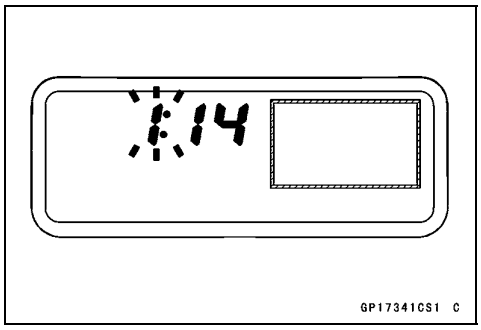

- Push the meter unit switch to MODE-A position, and check that the hour display is decided and minute display starts flashing.
- By pushing the meter unit switch to MODE-B position each time, check that the minute display changes.

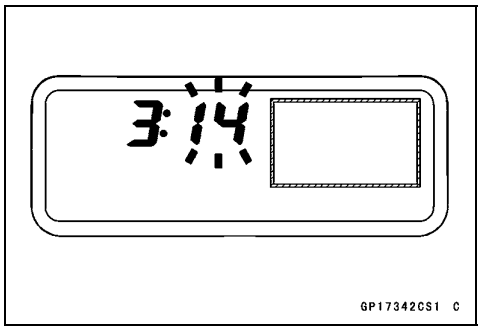

Downloaded from www.vulcanriders-sweden.org

Meter, Gauge

● Push the meter unit switch to MODE-A position, and check that the minute display is decided.

★If the display function does not work, replace the meter base (see Meter Unit Disassembly).

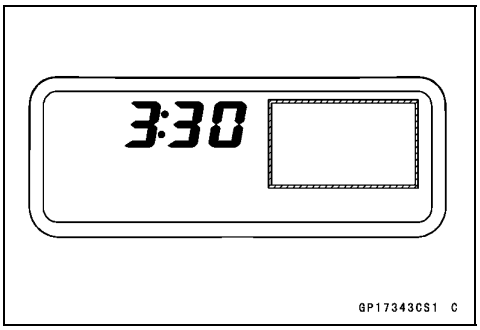

● Set to the setting mode, and push the meter unit switch [A].



● Check that the display changes to the unit setting mode [A].

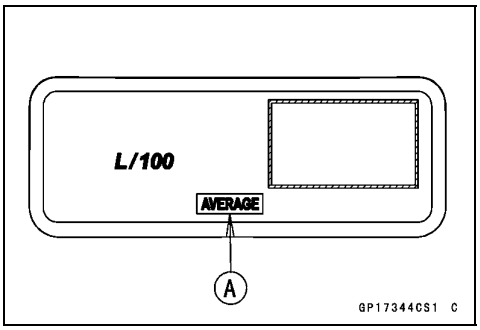

● By pushing the meter unit switch [A] to MODE-B position [B] each time, check that the display changes as follows.

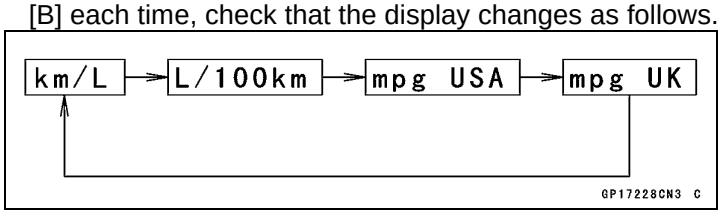

★If the display function does not work, replace the meter base (see Meter Unit Disassembly).

○To return to the ordinary indication, push and hold the meter unit switch more than two seconds.

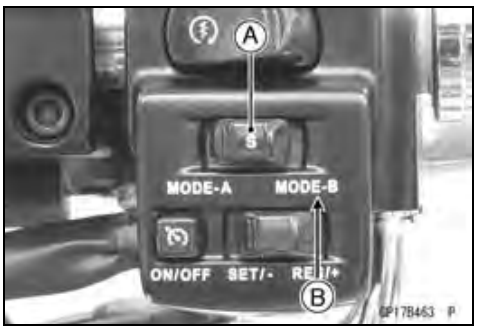

Downloaded from www.vulcanriders-sweden.org

Meter, Gauge

Can Communication Item Inspection

Cruise Control Indicator Light (LED) Inspection

- Turn the ignition switch to ON.
- Push the cruise control ON/OFF button [A].

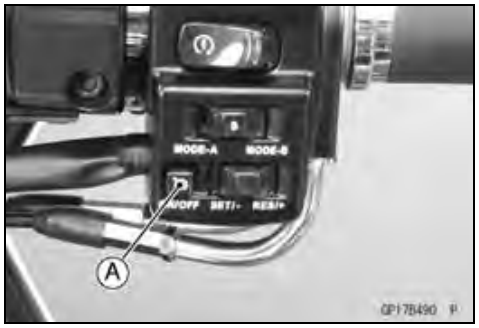

- Check that the cruise control indicator light (LED) [A] goes on.
- Push the cruise control ON/OFF button.
- Check that the cruise control indicator light (LED) goes off.

★If the cruise control indicator light (LED) does not function, check the right handlebar switch housing (see Switch Inspection).

★If the switch housing is good, replace the meter base and/or ECU.

○The cruise control indicator light (LED) goes on at the check of the cruise control cancel switches too (see Cruise Control Cancel Switches Inspection).

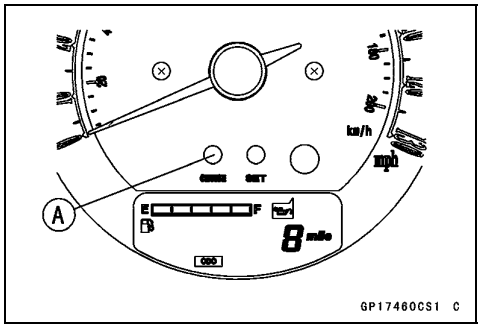

Service Code Indication Inspection

○When the DFI/ETV system parts have trouble, the service code appears (see Fuel System (DFI) chapter).

- For example, disconnect the gear position switch lead connector [A].

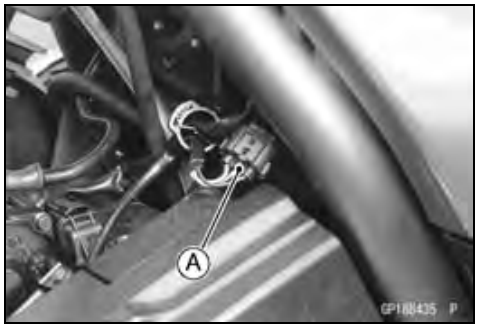

- Turn the ignition switch to ON.
- Check that the “Error” [A], “25” and “FI” symbol [B] appear in the display.

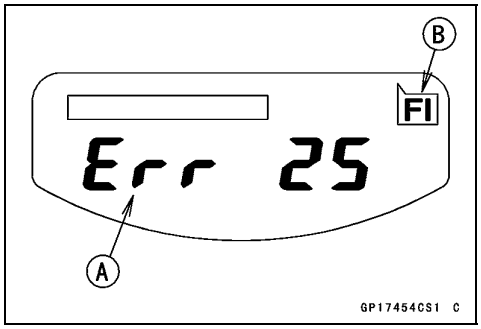

Downloaded from www.vulcanriders-sweden.org

Meter, Gauge

● Push and hold the meter unit switch [A] more than two seconds.
● Check that the display changes to the ordinary indication.
★If the display function does not work, replace the meter base and/or ECU.
● Connect the gear position switch lead connector.



Water Temperature Warning Indication Inspection

● Remove:
Front Seat (see Front Seat Removal in the Frame chapter)
Fuel Tank Mounting Bolts [A]
Bracket [B]
● Lift up the rear end of the fuel tank, using a suitable wood block.



● Disconnect the water temperature sensor connector [A].
● Connect the variable rheostat [B] to the connector of the harness.

NOTE

○*Note that the radiator fan rotates when connecting the resistance of 120 Ω (115°C (239°F)).*

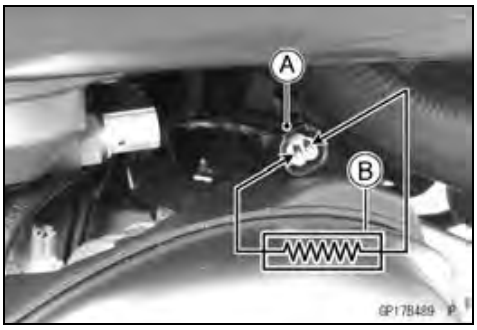

● Turn the ignition switch to ON.
● Check that the warning indicator light (LED) [A] goes on, and the water temperature warning symbol [B] appears in the display when the variable rheostat is set the resistance of 90 Ω (120°C (248°F)).
★If the display function does not work, replace the meter base and/or ECU.

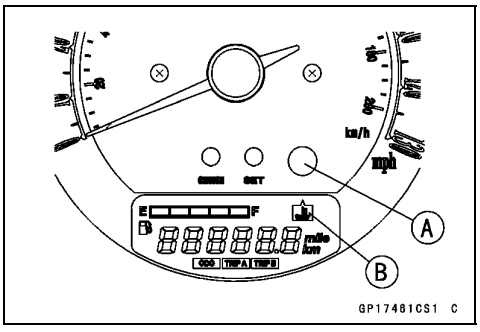

Idle Speed Indication Inspection

● Refer to the Idle Speed Adjustment in the Periodic Maintenance chapter.
★If the idle speed cannot adjust, check the following items.
Water Temperature Sensor (see Water Temperature Sensor Inspection)
Right Handlebar Switch Housing (see Switch Inspection)
★If the above items are good, replace the meter base and/or ECU.

Downloaded from www.vulcanriders-sweden.org

Meter, Gauge

Gear Position Indication Inspection

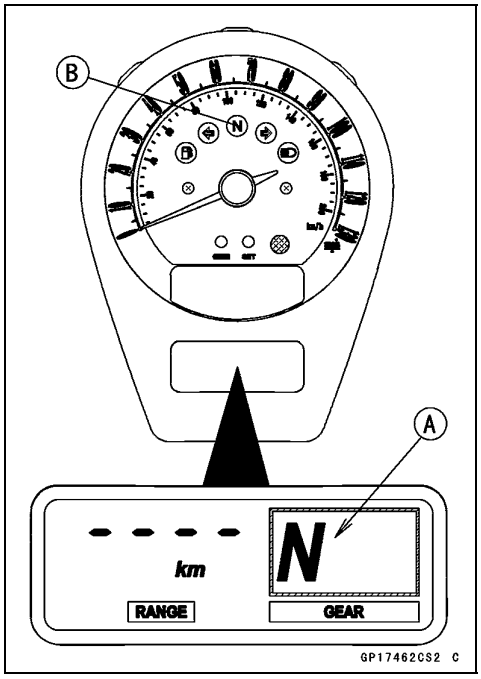

- Turn the ignition switch to ON in the neutral position.
- The N mark [A] appears and the neutral indicator light [B] (LED) goes on in the display.
- Set the low gear position, check that the display changes to 1 mark.
- Using the center stand, raise the rear wheel off the ground.
- Start the engine, and change the gear position.
- Check that the display corresponding to each gear position (1, 2, 3, 4, 5 or OD) appears.

★If the display function does not work, check the gear position switch (see Gear Position Switch Inspection)

★If the switch is good, replace the meter base and/or ECU.

Cruise Control Set Indicator Light (LED) Inspection

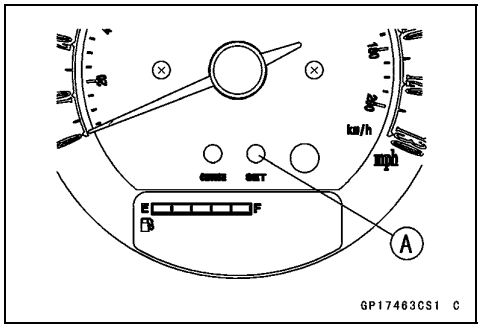

○The cruise control set indicator light (LED) [A] actually goes on at the cruise control condition.

Cruise Control Main Conditions:

The cruise control ON/OFF button is ON position.
The vehicle speed is 48 ~ 137 km/h (30 ~ 85 mph).
The gear position is 3rd, 4th, 5th or OD (6th).
Any service code does not appear.
The cruise control switch (SET/–) pushed to ON.

★If the cruise control set indicator light (LED) does not go on at the cruise control condition, check the following items.

Right Handlebar Switch Housing (see Switch Inspection)
Speed Sensor (see Speed Sensor Inspection)
Gear Position Switch (see Gear Position Switch Inspection)
Cruise Control System Switches (see Cruise Control System Switch Inspection)

★If the above items are good, replace the meter base and/or ECU.

Other Inspection

○The following items are displayed while running.

AVERAGE
RANGE

- When the above item is faulty indication, check the following items.

Fuel Injectors (see Fuel Injectors section in the Fuel System (DFI) chapter)
Fuel Level Sensor (see Fuel Level Sensor Inspection)

★If the above items are good, replace the meter base and/or ECU.

Downloaded from www.vulcanriders-sweden.org

Meter, Gauge

Meter Unit Inspection

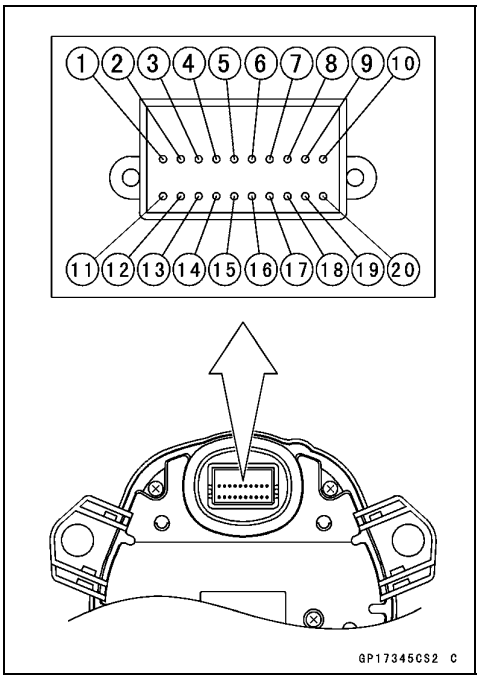

- Remove the meter unit (see Meter Unit Removal).

[1] Right Turn Signal Indicator Light (LED) (+)
[2] High Beam Indicator Light (LED) (+)
[3] Unused
[4] Unused
[5] Unused
[6] CAN Communication Line (High)
[7] CAN Communication Line (Low)
[8] Unused
[9] Left Turn Signal Indicator Light (LED) (+)
[10] Fuel Level Sensor
[11] Battery (+)
[12] Ignition (+)
[13] Ground (–)
[14] Neutral Indicator Light (LED) (–)
[15] Meter Switch 1
[16] Meter Switch 2
[17] Meter Switch 3
[18] Oil Pressure Warning Indicator Light (LED) (–)
[19] Speed Sensor Signal
[20] Speed Sensor Supply Voltage (+)

CAUTION

Do not drop the meter unit. Place the meter unit so that it faces upward. If the meter assembly is left upside down or sideways for a long time or dropped, it will malfunction. Do not short each terminal.

Check 1: CAN Communication Line Resistance Inspection

- Set the hand tester [A] to the ×1 Ω range and connect it to the terminal [7] and [6] in the meter unit.

Special Tool - Hand Tester: 57001-1394

CAN Communication Line Resistance (at Meter Unit)
Standard: 122 ~ 126 Ω

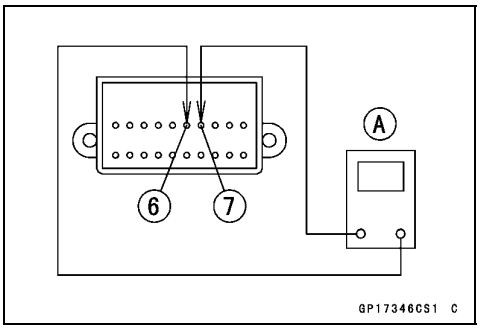

★If the tester reading is not specified, replace the meter base (see Meter Unit Disassembly).

Check 2: Meter Unit Power Supply Inspection

- Using the auxiliary leads, the 12 V battery [A] to the meter unit connector as follows.

○Connect the battery positive (+) terminal to the terminal [11].
○Connect the battery negative (–) terminal to the terminal [13].

- Connect terminal [12] to the battery (+) terminal.

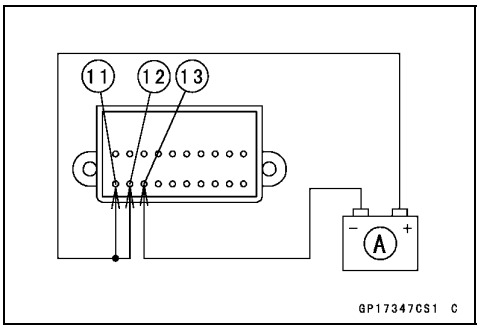

Downloaded from www.vulcanriders-sweden.org

Meter, Gauge

● Check the following items.
○The needle [A] of the speedometer momentarily points its last reading and back to the minimum position.
★If the meter unit does not work, replace the meter base (see Meter Unit Disassembly).

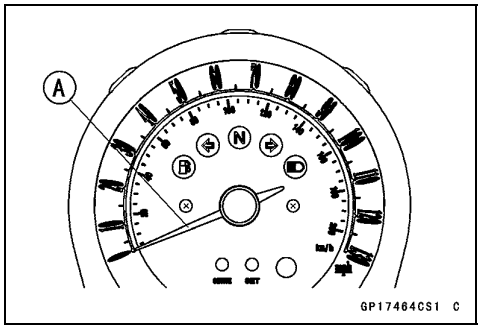

NOTE

○The flashings of the fuel level warning indicator light (LED), fuel gauge, "FUEL" and "– – –" do not failure of the meter unit.
○The lighting of the warning indicator light (LED) and coolant temperature warning symbol do not failure of the meter unit.
○Currently, for the meter is disconnected from the main harness each flashing and lighting occur.
○The flashings of the fuel level warning indicator light (LED), fuel gauge, "FUEL" and "– – –" are open of the fuel level gauge.
○The lighting of the warning indicator light (LED) and coolant temperature warning symbol are communication error to the ECU.
○Normally, each flashing and lighting disappears when the meter unit is connected to main harness.

Check 3: Right Turn Signal Indicator Light (LED) Inspection

● Connect the leads in the same circuit as Check 2.
● Connect the terminal [1] to the battery (+) terminal.

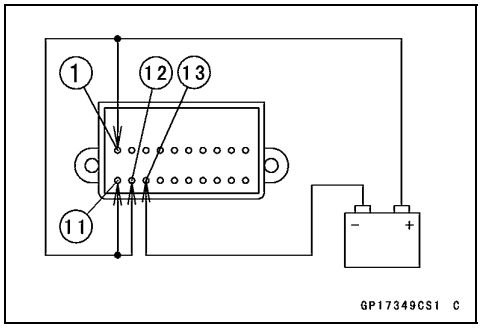

● Check that the right turn signal indicator light (LED) [A] goes on.
★If the indicator light does not go on, replace the meter base (see Meter Unit Disassembly).

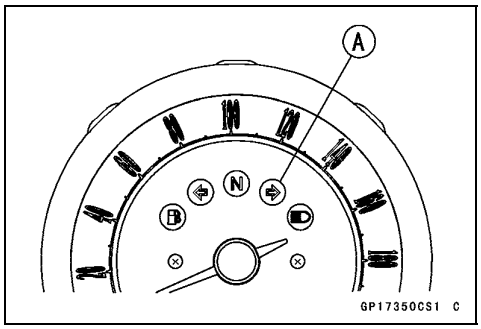

Downloaded from www.vulcanriders-sweden.org

Meter, Gauge

Check 4: High Beam Indicator Light (LED) Inspection
- Connect the leads in the same circuit as Check 2.
- Connect the terminal [2] to the battery (+) terminal.

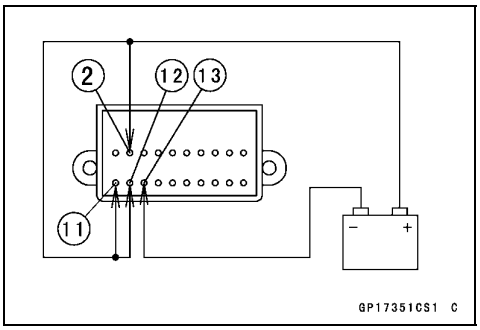

- Check that the high beam indicator light (LED) [A] goes on.

★If the indicator light does not go on, replace the meter base (see Meter Unit Disassembly).

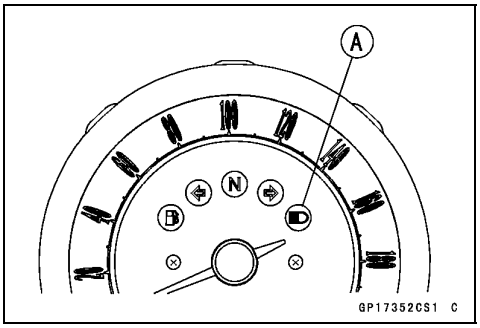

Check 5: Left Turn Signal Indicator Light (LED) Inspection
- Connect the leads in the same circuit as Check 2.
- Connect the terminal [9] to the battery (+) terminal.

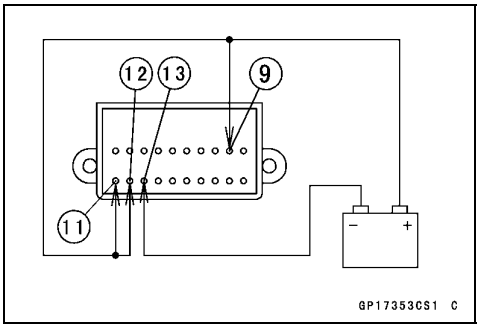

- Check that the left turn signal indicator light (LED) [A] goes on.

★If the indicator light does not go on, replace the meter base (see Meter Unit Disassembly).

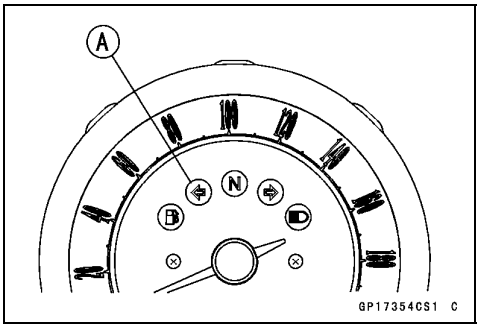

Check 6: Neutral Indicator Light (LED) Inspection
- Connect the leads in the same circuit as Check 2.
- Connect the terminal [14] to the battery (–) terminal.

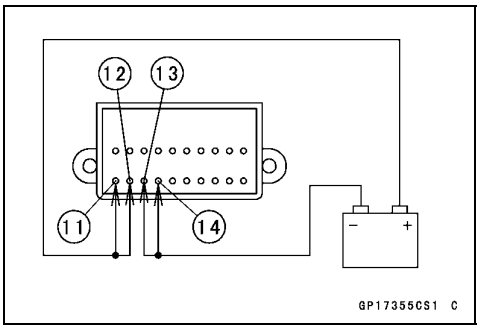

Downloaded from www.vulcanriders-sweden.org

Meter, Gauge

● Check that the neutral indicator light (LED) [A] goes on.
★If the indicator light does not go on, replace the meter base (see Meter Unit Disassembly).

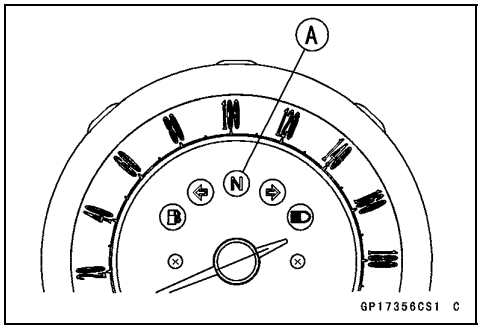

Check 7: Oil Pressure Warning Symbol Inspection
● Connect the leads in the same circuit as Check 2.
● Connect the terminal [18] to the battery (–) terminal.

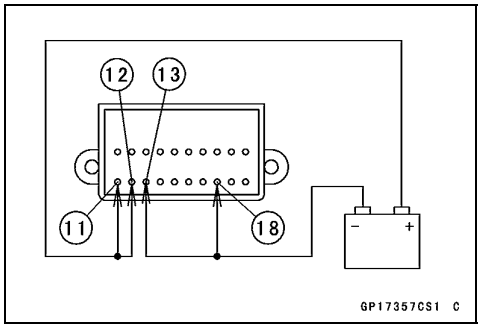

● After about 3 seconds, check that the oil pressure warning symbol [A] appears in the display.
★If the oil pressure warning symbol does not appear, replace the meter base (see Meter Unit Disassembly).

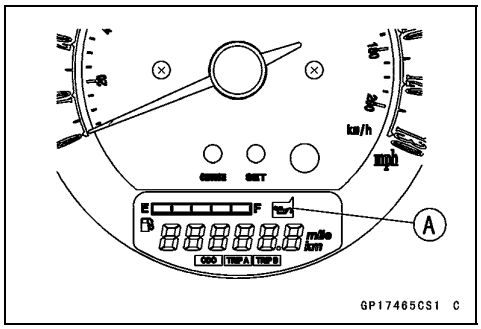

Check 8: Fuel Gauge Inspection
● Connect the leads in the same circuit as Check 2.
● Connect the variable rheostat [A] to the terminal [10] and the battery (–) terminal.

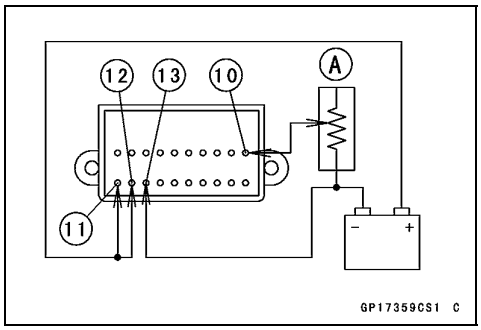

● Check that the number of segments [A] matches the resistance value of the variable rheostat.
○When the terminal [10] is connected, one segment in the fuel level gauge should appear about every 5 seconds.

Variable Rheostat Resistance (Ω)	Display Segments
50	5
100	3
160	1

★If the display function does not work, replace the meter base (see Meter Unit Disassembly).

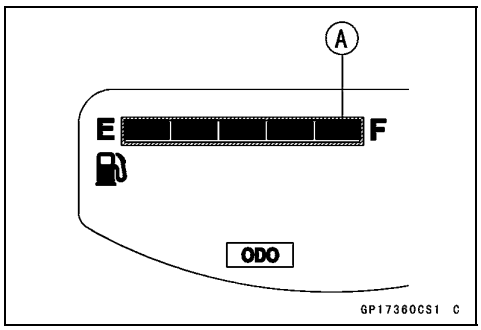

Downloaded from www.vulcanriders-sweden.org

Meter, Gauge

Check 9: Fuel Level Warning Inspection

- Connect the leads in the same circuit as Check 2.
- Connect the variable rheostat [A] (about 213 Ω) to the terminal [10] and the battery (–) terminal.

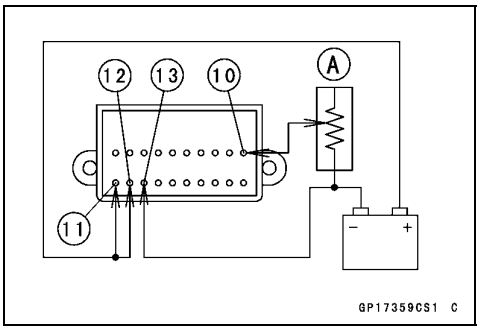

- After about 5 seconds, check that the fuel level warning indicator light (LED) [A] goes on, and the “FUEL” [B] and one segment [C] flash in the display.

★If the indicator light does not go on and/or the “FUEL” and one segment do not flash, replace the meter base (see Meter Unit Disassembly).

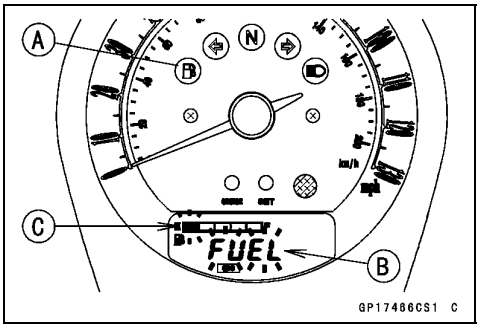

- By connecting the terminal [16] to the battery (+) terminal each time, check that the display changes as follows.

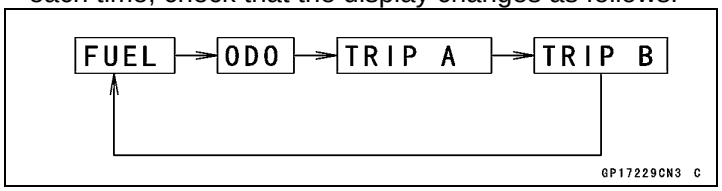

★If the display function does not work, replace the meter base (see Meter Unit Disassembly).

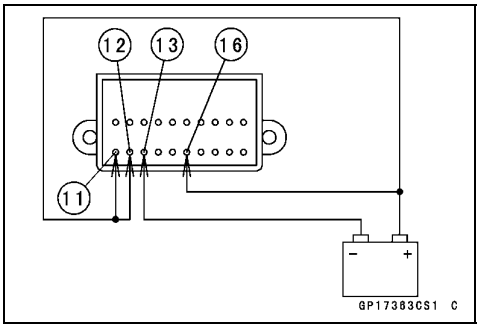

Check 10: Speedometer Inspection

- Connect the leads in the same circuit as Check 2.
- The speed equivalent to the input frequency is indicated in the oscillator [A], if the square wave is input into terminal [19].

○Indicates approximately 60 mph if the input frequency is approximately 877 Hz.

○Indicates approximately 60 km/h if the input frequency is approximately 548 Hz.

★If the display function does not work, replace the meter base (see Meter Unit Disassembly).

NOTE

○*The input frequency of the oscillator adds the integrated value of the odometer.*

○*The integrated value of the odometer cannot be reset.*

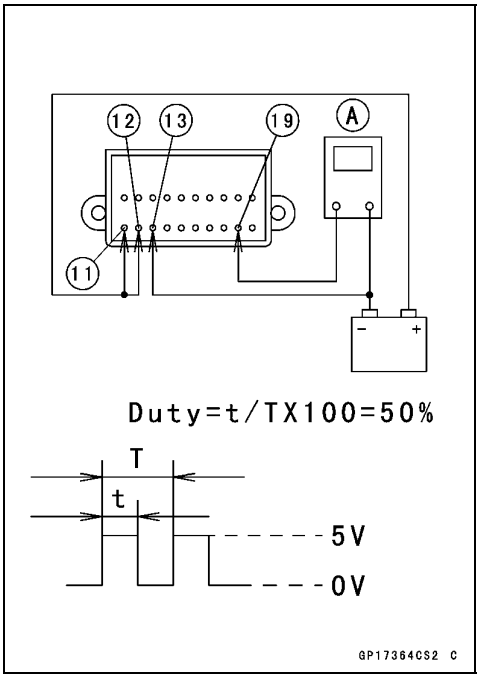

Downloaded from www.vulcanriders-sweden.org

Meter, Gauge

Check 11: Odometer Inspection

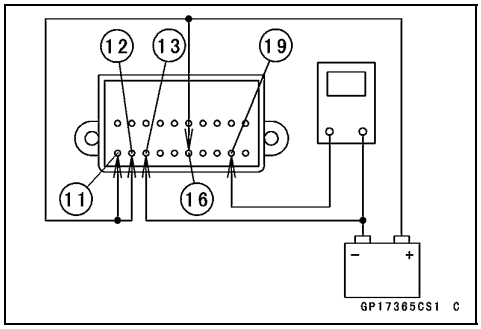

- Connect the leads in the same circuit as Check 10.
- Set the odometer mode by connecting the terminal [16] to the battery (+) terminal each time.
- Raise the input frequency of the oscillator to see the result of odometer inspection.

○Example: Indicates the increase of approximately 1 mile, if the input frequency is approximately 877 Hz for one minute.

○Example: Indicates the increase of approximately 1 km, if the input frequency is approximately 548 Hz for one minute.

★If the value indicated by the odometer does not increase, replace the meter base (see Meter Unit Disassembly).

NOTE

○*The integrated value of the odometer cannot be reset.*

Check 12: Trip A/B Meter Inspection

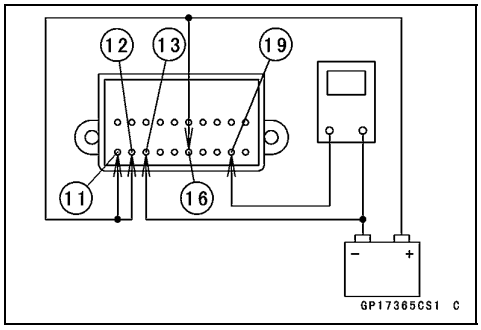

- Connect the leads in the same circuit as Check 10.
- Set the TRIP A or B meter mode by connecting the terminal [16] to the battery (+) terminal each time.
- Raise the input frequency of the oscillator to see the result of trip meter A/B inspection.

★If the value indicated by the trip meter A/B do not increase, replace the meter base (see Meter Unit Disassembly).

- Connect the terminal [16] to the battery (+) terminal more than two seconds and check that each TRIP meter resets to 0.0.

★If the display function does not change, replace the meter base (see Meter Unit Disassembly).

NOTE

○*The integrated value of the odometer cannot be reset.*

Downloaded from www.vulcanriders-sweden.org

Meter, Gauge

Meter Unit Circuit

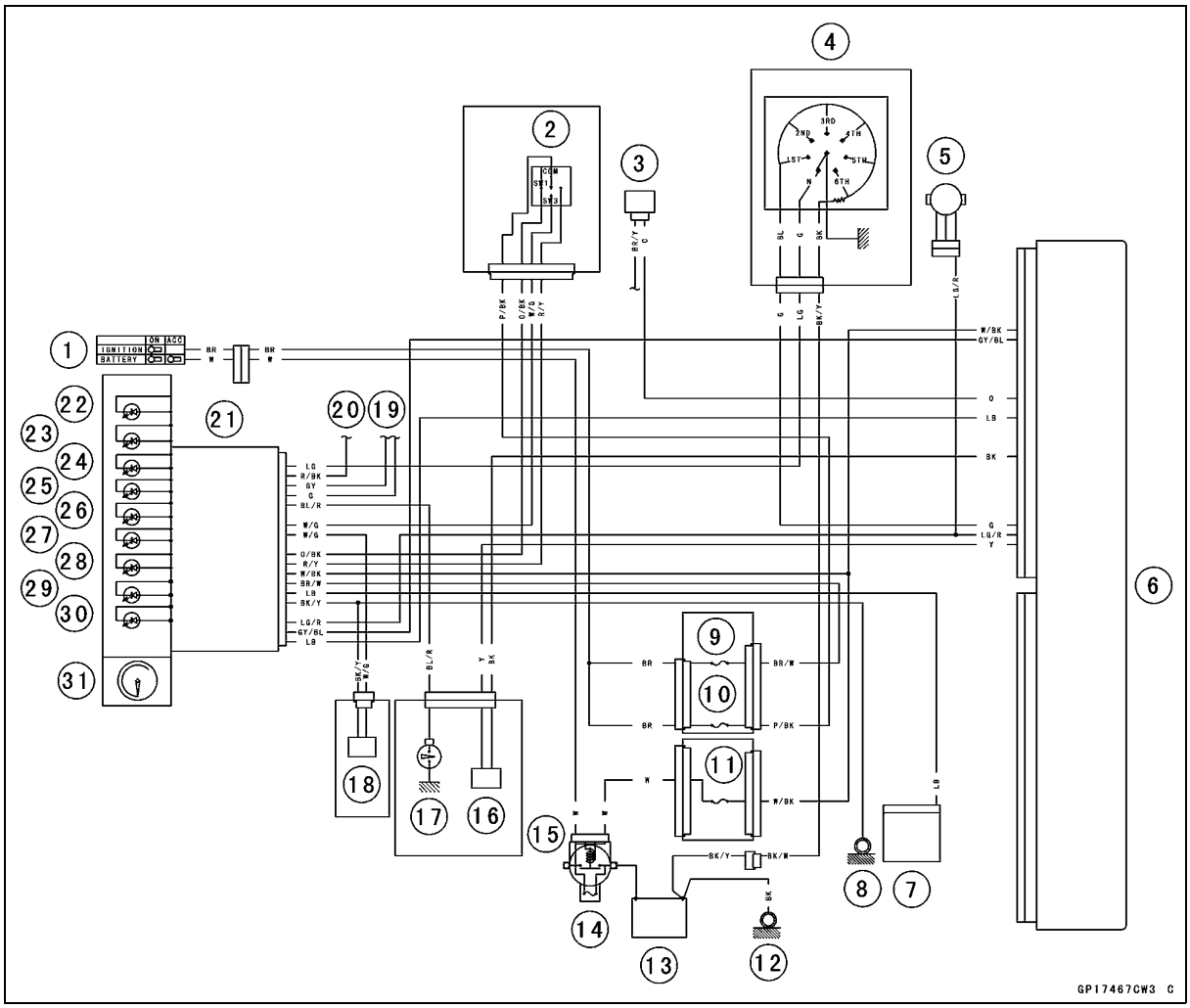

1. Ignition Switch
2. Meter Unit Switch
3. Water Temperature Sensor
4. Gear Position Switch
5. Speed Sensor
6. ECU
7. Turn Signal Control Relay
8. Frame Ground 3
9. Ignition Fuse 10 A
10. Cruise Control Fuse 5 A
11. ECU Fuse 10 A
12. Engine Ground
13. Battery
14. Main Fuse 30 A
15. Starter Relay
16. Crankshaft Sensor
17. Oil Pressure Switch
18. Fuel Level Sensor
19. to Turn Signal Switch
20. to Dimmer Switch
21. Meter Unit
22. Left Turn Signal Indicator Light (LED)
23. Right Turn Signal Indicator Light (LED)
24. Neutral Indicator Light (LED)
25. High Beam Indicator Light (LED)
26. Warning Indicator Light (LED)
27. Fuel Level Warning Indicator Light (LED)
28. Illumination Light (LED)
29. Cruise Control Indicator Light (LED)
30. Cruise Control Set Indicator Light (LED)
31. Speedometer

Downloaded from www.vulcanriders-sweden.org

Cruise Control System Switches

Cruise Control System Switch Inspection

NOTE

- *Refer to the Fuel System (DFI) chapter for the information of the cruise control system parts.*
- *The inspection of cruise control system switches can check by the following the cancel switch inspection mode and the operating of each switch.*

Cruise Control System Switches

Number	Name	Place
1	Cruise Control Cancel Switch (Throttle) [A]	Throttle Body
2	Cruise Control Cancel Switch (Front [B]/Rear [C] Brake)	Right Handlebar Switch Housing and Brake Pedal
3	Front Brake Light Switch [D] or Rear Brake Light Switch [E]	
4	Cruise Control Cancel Switch (Clutch) [F]	Left Handlebar Switch Housing
5	Neutral Switch [G]	Gear Position Switch
6	Cruise Control Switch (SET/-) [H]	Right Handlebar Switch Housing
7	Cruise Control Switch (RES/+) [I]	Right Handlebar Switch Housing

NOTE

- *The number that appears in the cancel switch diagnostic mode does not disappear until the diagnostic mode is finished.*



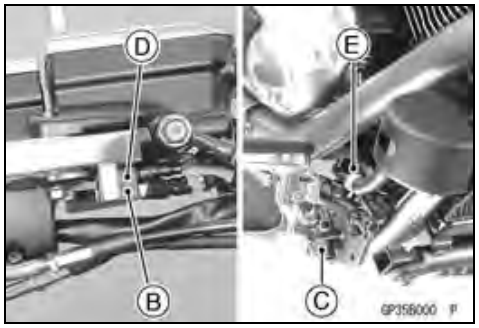





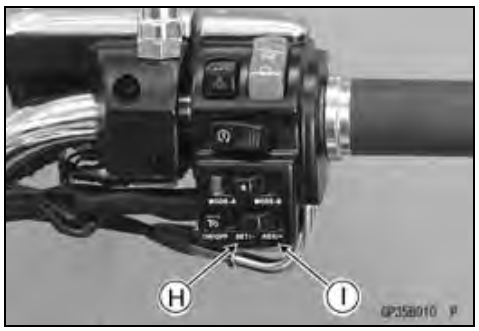

Downloaded from www.vulcanriders-sweden.org

Cruise Control System Switches

- Shift the transmission to 1st gear.
- While pushing in meter switch [A], turn the ignition switch [B] to ON.

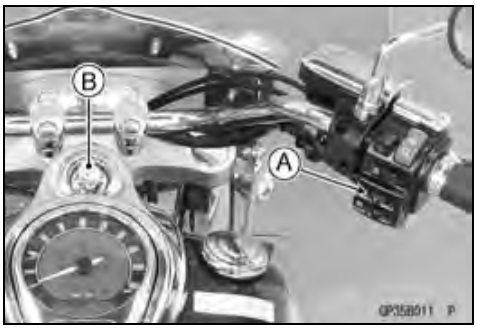

○The meter display will enter the cancel switch diagnostic mode [A].
○"CHEC" [B] will appear on the display.

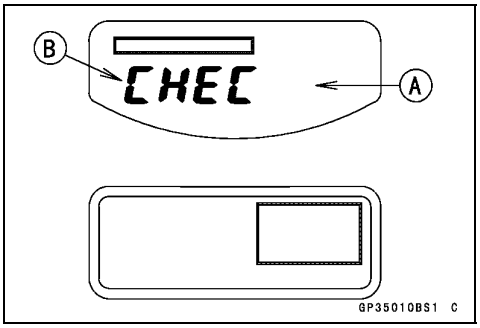

★If a number [A] is flashed, inspect the switch that matches the number according to the above table (see Switch Inspection).

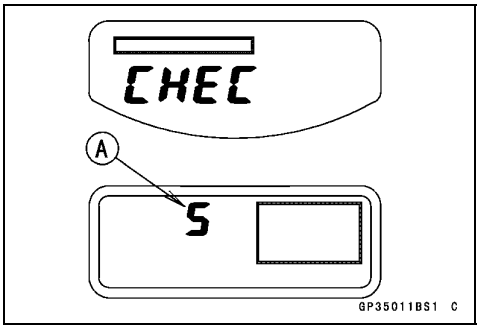

- Close the throttle [A] to the stop.

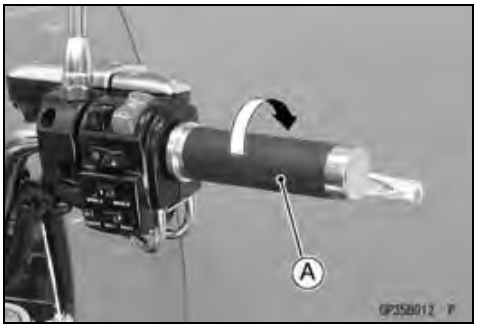

- The number 1 [A] will appear and the "CRUISE" indicator light (LED) will come ON.
- While returning the throttle to the stop, the indicator light (LED) will go OFF.

★If number 1 does not appear, inspect the cruise control cancel switch (throttle) (see Switch Inspection).
★If the switch is good, check the throttle cable condition (see Cable Installation in the Fuel System (DFI) chapter).

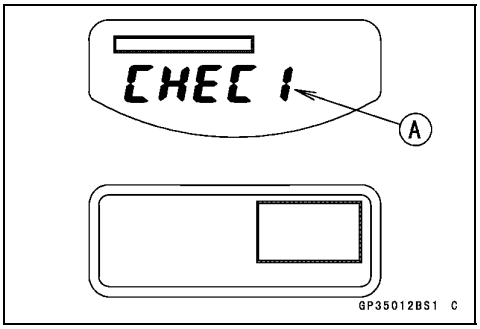

Downloaded from www.vulcanriders-sweden.org

Cruise Control System Switches

- Pull in the front brake lever.
- The number 2 [A] and 3 [B] will appear and the “CRUISE” indicator light (LED) will come ON.
- While releasing the brake lever, the indicator light (LED) will go OFF.

★If number 2 does not appear, inspect the cruise control cancel switch (front brake) (see Switch Inspection).

★If number 3 does not appear, inspect the front brake light switch (see Switch Inspection).

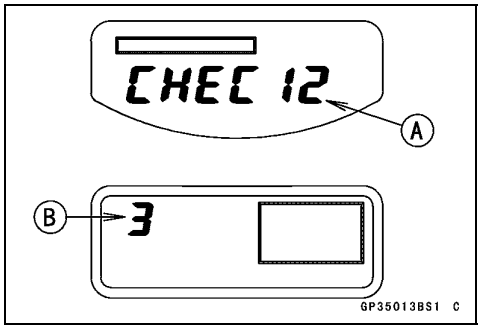

- Turn the ignition switch to OFF and reset the meter to the cancel switch diagnostic mode.

- Depress the brake pedal.
- The number 2 [A] and 3 [B] will appear and the “CRUISE” indicator light (LED) will come ON.
- While releasing the brake pedal, the indicator light (LED) will go OFF.

★If number 2 does not appear, inspect the cruise control cancel switch (rear brake) (see Switch Inspection).

★If number 3 does not appear, inspect the rear brake light switch (see Switch Inspection).

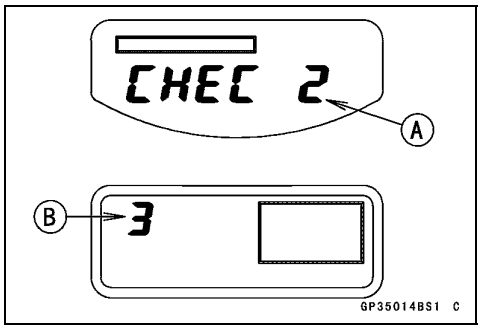

- Pull in the clutch lever.
- The number 4 [A] will appear and the “CRUISE” indicator light (LED) will come ON.
- While releasing the clutch lever, the indicator light (LED) will go OFF.

★If number 4 does not appear, inspect the cruise control cancel switch (clutch) (see Switch Inspection).

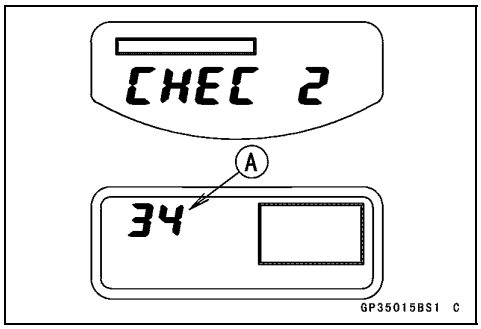

- Shift the transmission to the neutral position.
- The number 5 [A] will appear and the “CRUISE” indicator light (LED) will come ON.
- While shifting to 1st gear, the indicator light (LED) will go OFF.

★If number 5 does not appear, inspect the gear position switch (see Gear Position Switch Inspection).

- Shift the transmission to 1st gear.

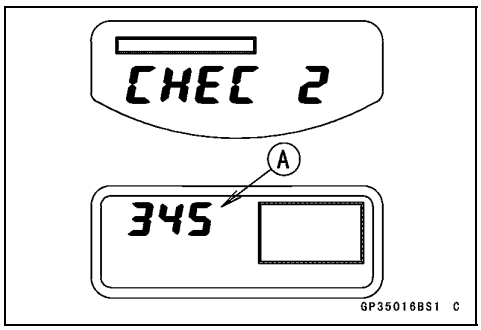

Downloaded from www.vulcanriders-sweden.org

Cruise Control System Switches

● Push the cruise control switch to the “SET/-” position [A].

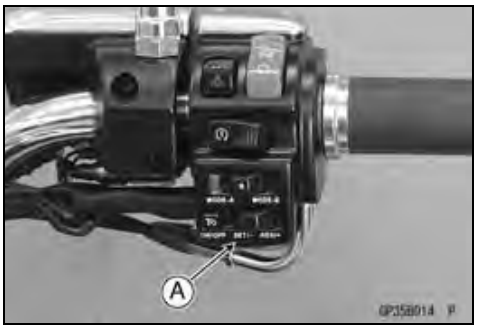

● The number 6 [A] will appear and the “CRUISE” indicator light (LED) will come ON.
● While returning the switch to its original position, the indicator light (LED) will go OFF.
★If number 6 does not appear, inspect the cruise control switch (see Switch Inspection).

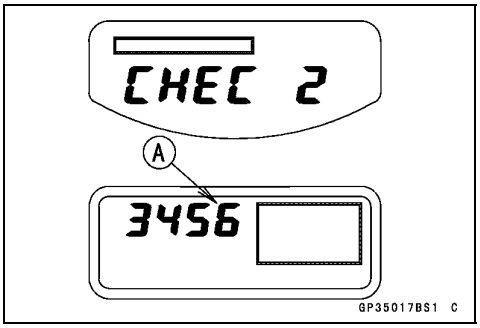

● Push the cruise control switch to the “RES/+” position [A].

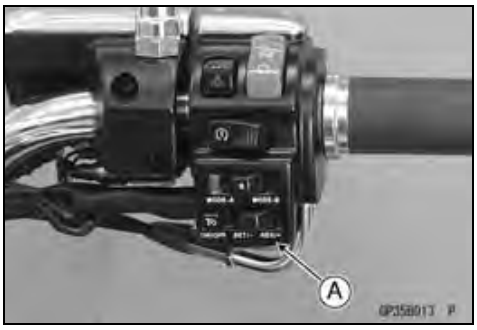

● The number 7 [A] will appear and the “CRUISE” indicator light (LED) will come ON.
● While returning the switch to its original position, the indicator light (LED) will go OFF.
★If number 7 does not appear, inspect the cruise control switch (see Switch Inspection).

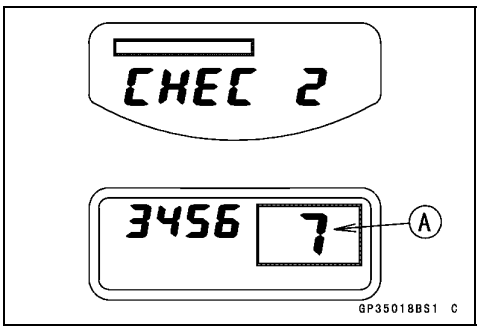

● To exit the cancel switch diagnostic mode:
○Push the meter switch IN for more than 2 seconds.
○Operate the motorcycle above than 3.1 mph (5 km/h).
○Or when the ECU does not receive a signal from the cancel switches for 10 minutes while in the cancel switch diagnostic mode.

Downloaded from www.vulcanriders-sweden.org

Cruise Control System Switches

Cruise Control System Switch Circuit

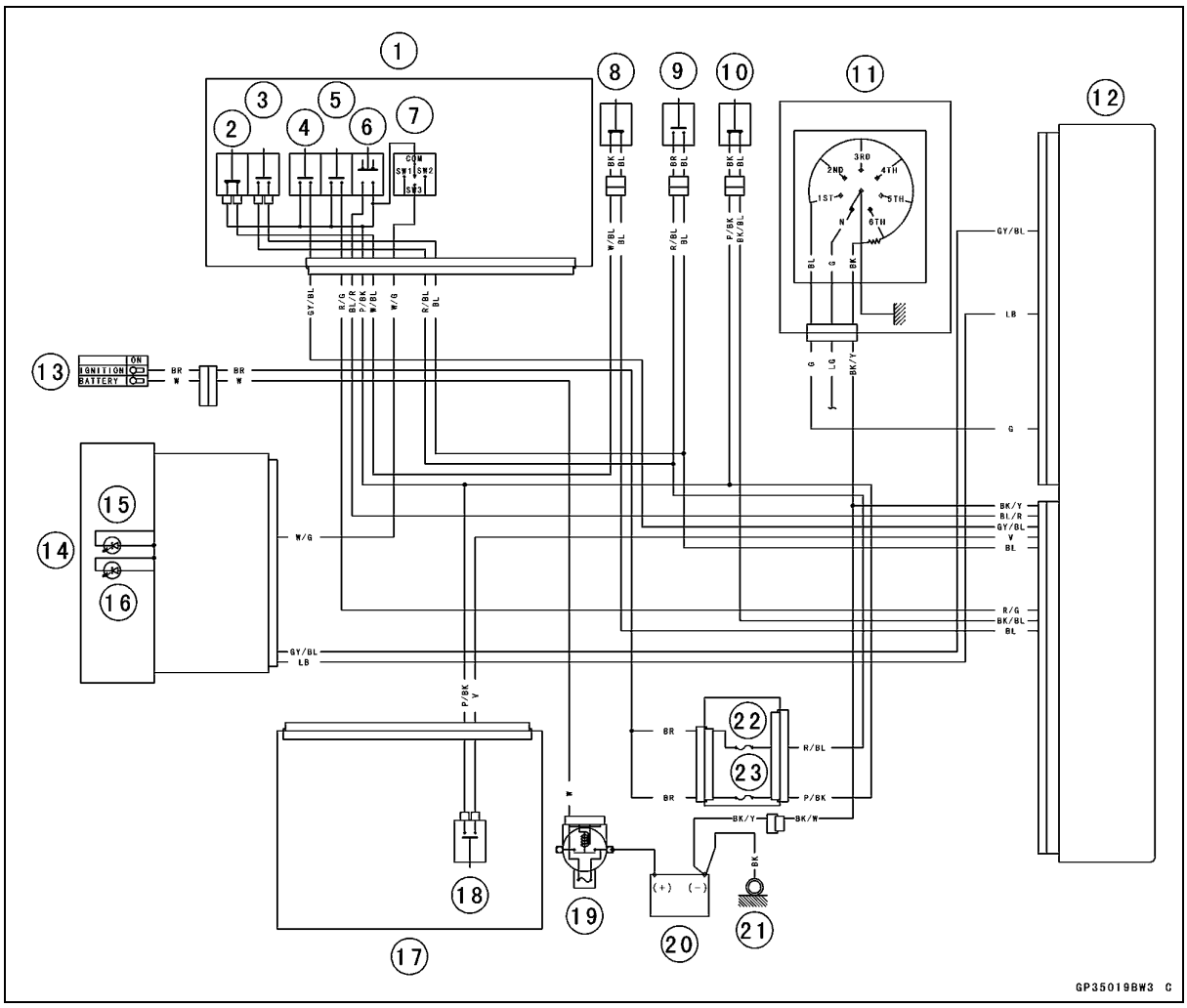

1. Right Handlebar Switch Housing
2. Cruise Control Cancel Switch (Front Brake)
3. Front Brake Light Switch
4. Cruise Control Switch (RES/+)
5. Cruise Control Switch (SET/–)
6. Cruise Control ON/OFF Button
7. Meter Unit Switch
8. Cruise Control Cancel Switch (Rear Brake)
9. Rear Brake Light Switch
10. Cruise Control Cancel Switch (Throttle)
11. Gear Position Switch
12. ECU
13. Ignition Switch
14. Meter Unit
15. Cruise Control Indicator Light (LED)
16. Cruise Control Set Indicator Light (LED)
17. Left Handlebar Switch Housing
18. Cruise Control Cancel Switch (Clutch)
19. Main Fuse 30 A
20. Battery
21. Engine Ground
22. Taillight Fuse 10 A
23. Cruise Control Fuse 5 A

Downloaded from www.vulcanriders-sweden.org

Switch and Sensors

Fuel Level Sensor Inspection

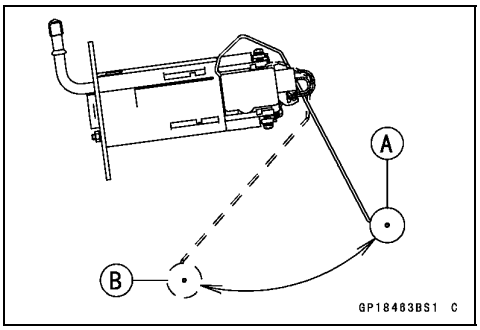

- Remove:
  Fuel Pump (see Fuel Pump Removal in the Fuel System (DFI) chapter)
- Check that the float moves up and down smoothly without binding. It should go down under its own weight.

★If the float does not move smoothly, replace the fuel pump.
Float in Full Position [A]
Float in Empty Position [B]

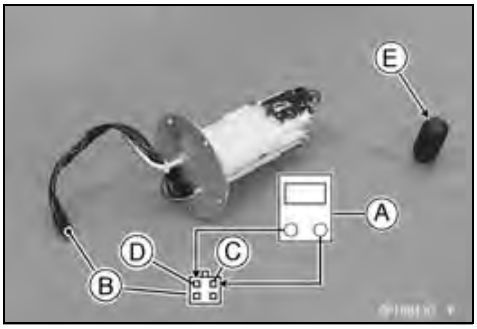

- Using the hand tester [A], measure the resistance across the terminals in the fuel level sensor lead connector [B].
  Black/White [C]
  Red/Black [D]

Special Tool - Hand Tester: 57001-1394

★If the tester readings are not as specified, replace the fuel pump.

Fuel Level Sensor Resistance
Standard: Full position [E]: 9 ~ 11 Ω
Empty position: 213 ~ 219 Ω

Water Temperature Sensor Inspection

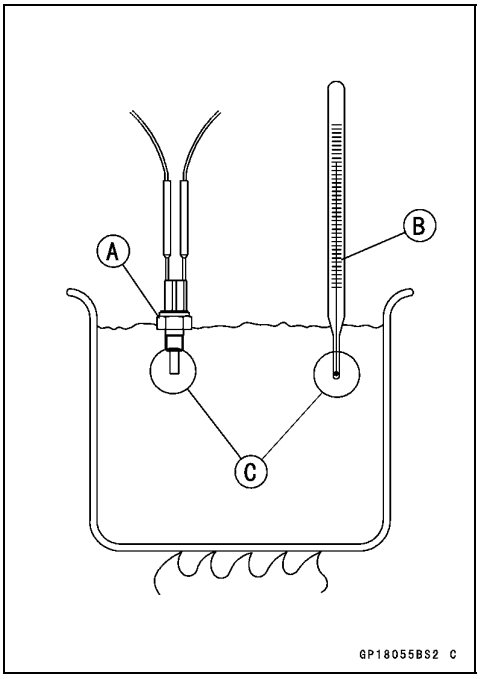

- Remove:
  Water Temperature Sensor (see Water Temperature Sensor Removal in the Fuel System (DFI) chapter)
- Suspend the sensor [A] in a container of machine oil so that the heat-sensitive portion and threaded portion are submerged.
- Suspend an accurate thermometer [B] with heat-sensitive portions [C] located in almost the same depth.

NOTE

○*The sensor and thermometer must not touch the container side or bottom.*

- Place the container over a source of heat and gradually raise the temperature of the oil while stirring the oil gently for even temperature.
- Using the hand tester, measure the internal resistance of the sensor across the terminal and the body at the temperatures shown in the table.

★If the measurement is out of the range, replace the sensor.

Water Temperature Sensor Resistance

Temperature	Resistance (kΩ)
−20°C (−4°F)	*18.80 ±2.37
0°C (32°F)	*(about 6.544)
40°C (104°F)	1.136 ±0.095
100°C (212°F)	0.1553 ±0.0070

*: Reference Information

Downloaded from www.vulcanriders-sweden.org

Switch and Sensors

Speed Sensor Removal

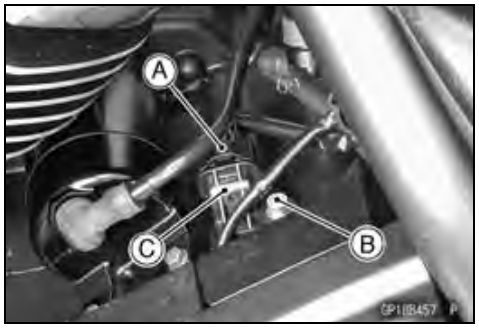

- Remove:
  Speed Sensor Lead Connector [A]
  Speed Sensor Mounting Bolt [B]
  Speed Sensor [C]

Speed Sensor Installation

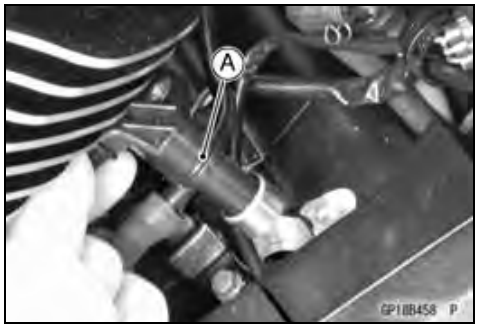

- Apply grease to the O-ring [A] on the speed sensor.
- Fit the speed sensor into the crankcase surely.
- Apply a non-permanent locking agent to the threads of the speed sensor mounting bolt.
- Tighten:

Torque - Speed Sensor Mounting Bolt: 9.8 N·m (1.0 kgf·m, 87 in·lb)

Speed Sensor Inspection

- Refer to the speed sensor Output Voltage Inspection in the Fuel System (DFI) chapter.

Oxygen Sensor Removal (Equipped Models)



- Remove:
  Right Side Covers (see Side Covers Removal in the Frame chapter)
  Oxygen Sensor Lead Connector [A] (disconnect)
  Oxygen Sensor [B]

CAUTION
Do not pull strongly, twist, or bend the oxygen sensor lead. This may cause the wiring open.

Oxygen Sensor Installation (Equipped Models)

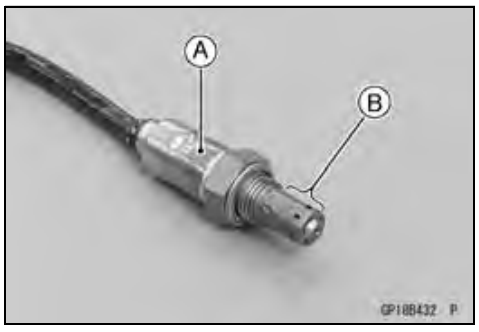

CAUTION
Never drop the oxygen sensor [A], especially on a hard surface. Such a shock to the unit can damage it. Do not touch the sensing part [B] to prevent oil contact. Oil contamination from hands can reduce sensor performance. **Do not pull strongly, twist, or bend the oxygen sensor lead. This may cause the wiring open.**

- Tighten:

Torque - Oxygen Sensor: 25 N·m (2.5 kgf·m, 18 ft·lb)

- Connect the oxygen sensor lead connector to the oxygen sensor.

Oxygen Sensor Inspection (Equipped Models)

- Refer to the Oxygen Sensor Inspection in the Fuel System (DFI) chapter.

Downloaded from www.vulcanriders-sweden.org

Switch and Sensors

Oxygen Sensor Heater Inspection (Equipped Models)

● Refer to the Oxygen Sensor Heater Inspection in the Fuel System (DFI) chapter.

Gear Position Switch Removal

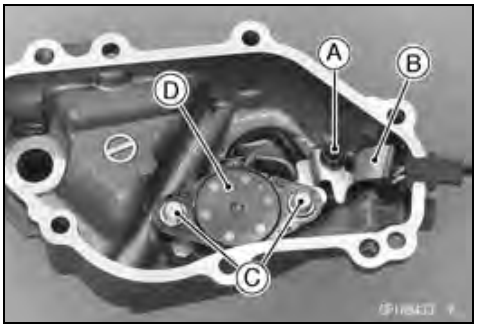

● Remove:
External Shift Mechanism Cover (see External Shift Mechanism Removal in the Crankshaft/Transmission chapter)
Gear Position Switch Lead Holding Plate Bolt [A]
Gear Position Switch Lead Holding Plate [B]
Gear Position Switch Bolts [C]
Gear Position Switch [D]

Gear Position Switch Installation

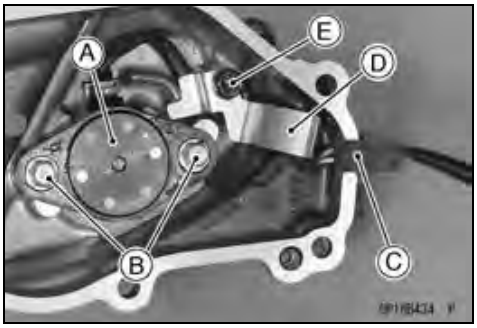

● Install the gear position switch [A].
● Apply a non-permanent locking agent to the threads of the gear position switch bolts [B].
● Tighten:

Torque - Gear Position Switch Bolts: 3.9 N·m (0.40 kgf·m, 35 in·lb)

● Apply silicone sealant to the circumference of the gear position switch lead grommet [C], and fit the grommet into the notch of the cover securely.

Sealant - Kawasaki Bond (Silicone Sealant): 92104-0004

● Secure the gear position switch lead with the holding plate [D], and apply a non-permanent locking agent to the thread of the gear position switch lead holding plate bolt [E] and tighten it.

Torque - Gear Position Switch Lead Holding Plate Bolt: 4.9 N·m (0.50 kgf·m, 43 in·lb)

● Install the removed parts (see appropriate chapters).

Gear Position Switch Inspection

NOTE

○*Be sure the transmission and external shift mechanism are good condition.*

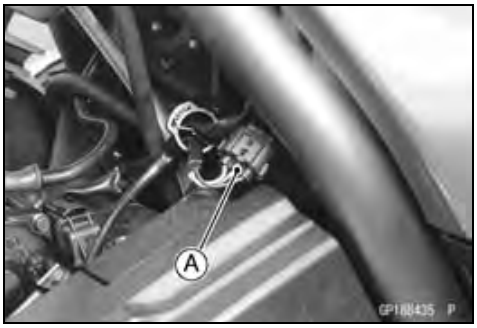

● Disconnect the gear position switch lead connector [A].

Downloaded from www.vulcanriders-sweden.org

Switch and Sensors

● Set the hand tester [A] to the × 1 kΩ or × 100 Ω range and connect it to the terminals in the gear position switch lead connector [B] and ground.

Special Tool - Hand Tester: 57001-1394

● When changing the gear position from lower gear to higher gear, raise the rear wheel off the ground with the stand and rotate the rear wheel by hand.

[C] Internal Circuit
[1] Green Lead
[2] Blue Lead
[3] Black Lead

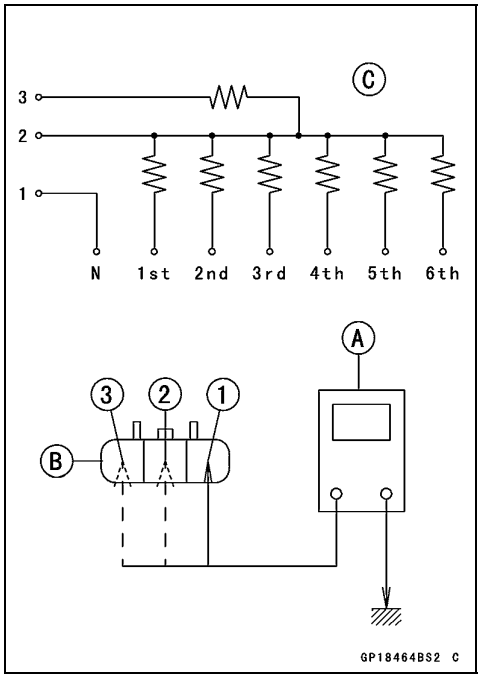

Gear Position Switch Resistance **(Unit: kΩ)**

	Connections		
Gear Position	[1] - Ground	[2] - Ground	[3] - Ground
Neutral	About 0	–	–
1st	–	3.00 ~ 3.32	11.64 ~ 12.87
2nd	–	1.71 ~ 1.89	10.35 ~ 11.44
3rd	–	1.07 ~ 1.19	9.71 ~ 10.74
4th	–	0.695 ~ 0.769	9.33 ~ 10.31
5th	–	0.430 ~ 0.476	9.07 ~ 10.02
6th	–	0.248 ~ 0.274	8.88 ~ 9.82

★If the tester reading is not as specified, replace the gear position switch with a new one.

Front Brake Light Switch Inspection

● Refer to the Brake Light Switch Operation in the Periodic Maintenance chapter.

Rear Brake Light Switch Check/Adjustment

● Refer to the Brake Light Switch Operation in the Periodic Maintenance chapter.

Downloaded from www.vulcanriders-sweden.org

Switch and Sensors

Switch Inspection

● Using a hand tester, check to see that only the connections shown in the table have continuity (about zero ohms).

Special Tool - Hand Tester: 57001-1394

○For the handlebar switches and the ignition switch, refer to the tables in the Wiring Diagram.

★If the switch has an open or short, repair it or replace it with a new one.

Rear Brake Light Switch Connections

Color	BR	BL
When brake pedal is pushed down.	○	○
When brake pedal is released.		

Sidestand Switch Connections

Color	G	BK
When sidestand is up.	○	○
When sidestand is down.		

Cruise Control Cancel Switch (Rear Brake) Connections

Color	BK	BL
When brake pedal is pushed down.		
When brake pedal is released.	○	○

Cruise Control Cancel Switch (Throttle) Connections

Color	BK	BL
When throttle grip is closed.		
When throttle grip is not closed.	○	○

Oil Pressure Switch Connections*

Color	SW. Terminal	Ground
When engine is stopped.	○	○
When engine is running.		

*: Engine lubrication system is in good condition.

Downloaded from www.vulcanriders-sweden.org

Relay Box

Relay Box Removal

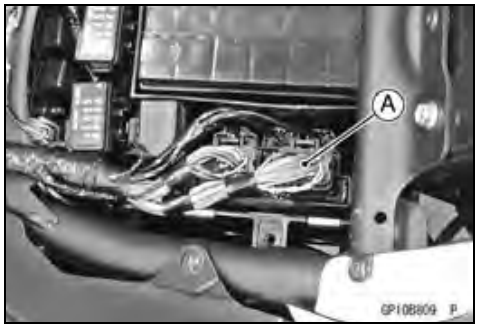

- Remove:
  Front Seat (see Front Seat Removal in the Frame chapter)
  Battery Case Cover (see Battery Removal)
  ECU Assembly [A] (with Bracket)

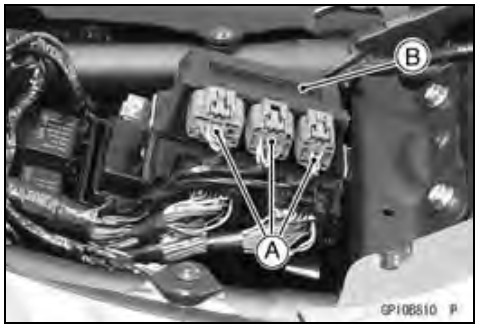

- Disconnect the connectors [A].
- Remove:
  Relay Box [B]

NOTE

○*The relay box has relays and diodes. The relays and diodes can not be removed.*

Relay Box Installation

- Connect the connector and refer to the ECU Installation in the Fuel System (DFI) chapter.

Relay Circuit Inspection

- Remove the relay box (see Relay Box Removal).
- Check conductivity of the following numbered terminals by connecting the hand tester and one 12 V battery to the relay box as shown in the figure (see Relay Box Internal Circuit).

Special Tool - Hand Tester: 57001-1394

★If the tester does not read as specified, replace the relay box.

Downloaded from www.vulcanriders-sweden.org

Relay Box

Relay Circuit Inspection (with the battery disconnected)

	Tester Connection	Tester Reading (Ω)
Headlight Circuit Relay	1-3	∞
ECU Main Relay**	6-7	∞
	4-5	Not ∞*
Fuel Pump Relay	7-8	∞
	9-10	Not ∞*
Starter Circuit Relay	11-16	∞
	11-12	∞
Fan Relay	17-20	∞
	18-19	Not ∞*

*: The actual reading varies with the hand tester used.
**: In this motorcycle, the ECU main relay is not used.

Relay Circuit Inspection (with the battery connected)

	Battery Connection (+) (–)	Tester Connection	Tester Reading (Ω)
ECU Main Relay	2-11	1-3	0
	4-5	7-6	0
Fuel Pump Relay	9-10	7-8	0
Fan Relay	18-19	17-20	0

	Battery Connection (+) (–)	Tester Connection DC 25 V Range (+) (–)	Tester Reading (V)
Starter Circuit Relay	16-12	11-12	Battery Voltage

(+): Apply positive lead.
(–): Apply negative lead.

Diode Circuit Inspection

- Remove the relay box (see Relay Box Removal).
- Check conductivity of the following pairs of terminals (see Relay Box Internal Circuit).

Diode Circuit Inspection

Tester Connection	1-11, 2-11, 12-13, 12-15, 12-16, 13-14, 13-15

★The resistance should be low in one direction and more than ten times as much in the other direction. If any diode shows low or high in both directions, the diode is defective and the relay box must be replaced.

NOTE

○*The actual meter reading varies with the meter or tester used and the individual diodes, but generally speaking, the lower reading should be from zero to one half the scale.*

Downloaded from www.vulcanriders-sweden.org

Relay Box

Relay Box Internal Circuit

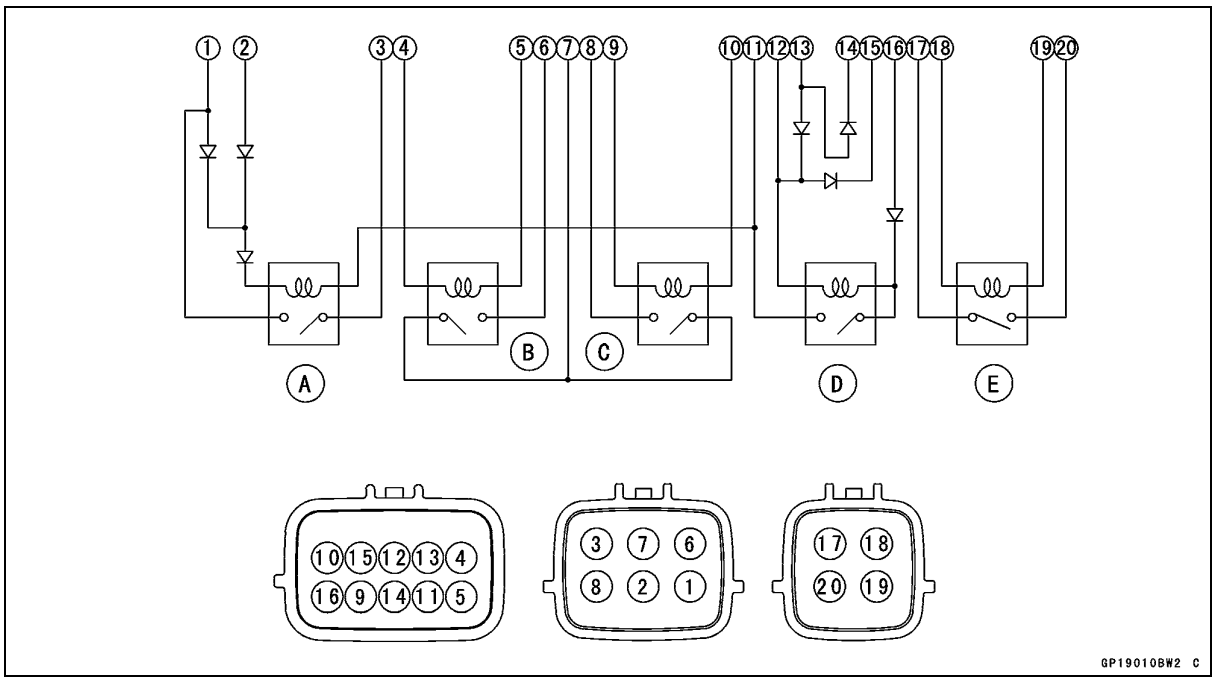

A. Headlight Circuit Relay
B. ECU Main Relay (Unused)
C. Fuel Pump Relay
D. Starter Circuit Relay
E. Fan Relay

Accessory Relay Inspection

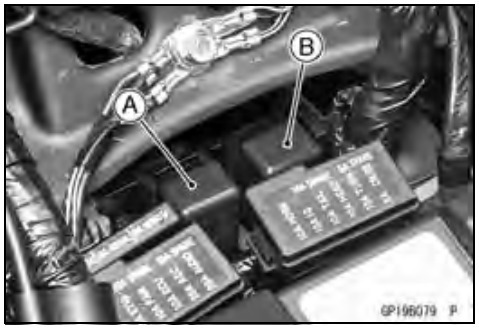

- Remove:
  Front Seat (see Front Seat Removal in the Frame chapter)
  Accessory Relay [A]

○The acceory relay is identical to the ETV actuator relay [B].

- Refer to the ETV Actuator Relay Inspection in the Fuel System (DFI) chapter for the accessory relay inspection.

Downloaded from www.vulcanriders-sweden.org

Fuse

30 A Main Fuse Removal

- Remove:
  Front Seat (see Front Seat Removal in the Frame chapter)
  Battery Case Cover (see Battery Removal)
- Disconnect:
  Starter Relay Connector [A]
- Pull out the 30 A main fuse [B] from the starter relay with needle nose pliers.

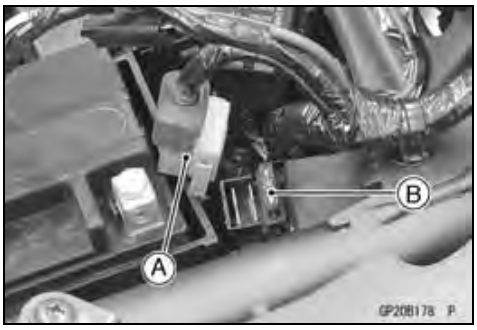

Fuse Box Fuse Removal

- Remove the front seat (see Front Seat Removal in the Frame chapter)
  Fuse Box 1 [A]
  Fuse Box 2 [B]

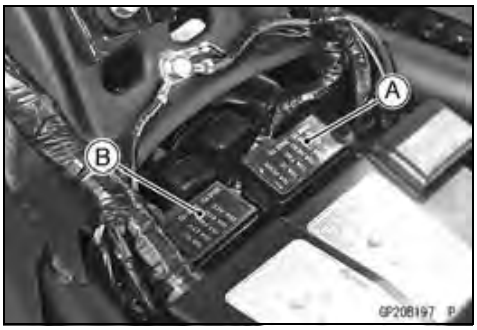

- Push the hook [A] to lift up the lid [B].



- Pull the fuses [A] straight out of the fuse box with needle nose pliers.

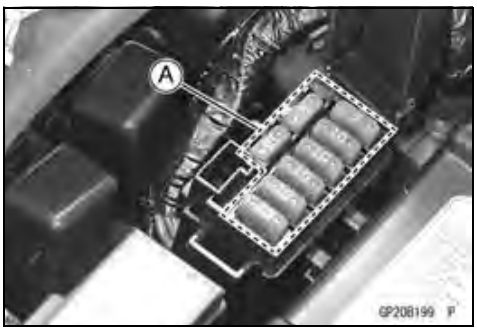

Fuse Installation

★If a fuse fails during operation, inspect the electrical system to determine the cause, and then replace it with a new fuse of proper amperage.

- Install the fuse box fuses on the original position as specified on the lid.

Downloaded from www.vulcanriders-sweden.org

Fuse

Fuse Inspection

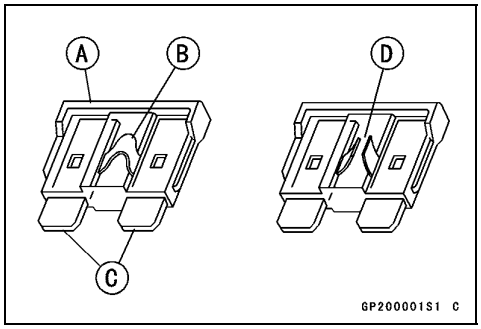

- Remove the fuse.
- Inspect the fuse element.

★If it is blown out, replace the fuse. Before replacing a blown fuse, always check the amperage in the affected circuit. If the amperage is equal to or greater than the fuse rating, check the wiring and related components for a short circuit.

Housing [A]
Fuse Element [B]
Terminals [C]
Blown Element [D]

NOTE

○*If the engine is operated under the condition which the battery needs refreshing charge, a main fuse may blow out due to a mass current flows to the battery.*

CAUTION

When replacing a fuse, be sure the new fuse matches the specified fuse rating for that circuit. Installation of a fuse with a higher rating may cause damage to wiring and components.

Downloaded from www.vulcanriders-sweden.org

Downloaded from www.vulcanriders-sweden.org

Appendix

Table of Contents

Cable, Wire, and Hose Routing 17-2
Troubleshooting Guide 17-38

Downloaded from www.vulcanriders-sweden.org

Cable, Wire, and Hose Routing

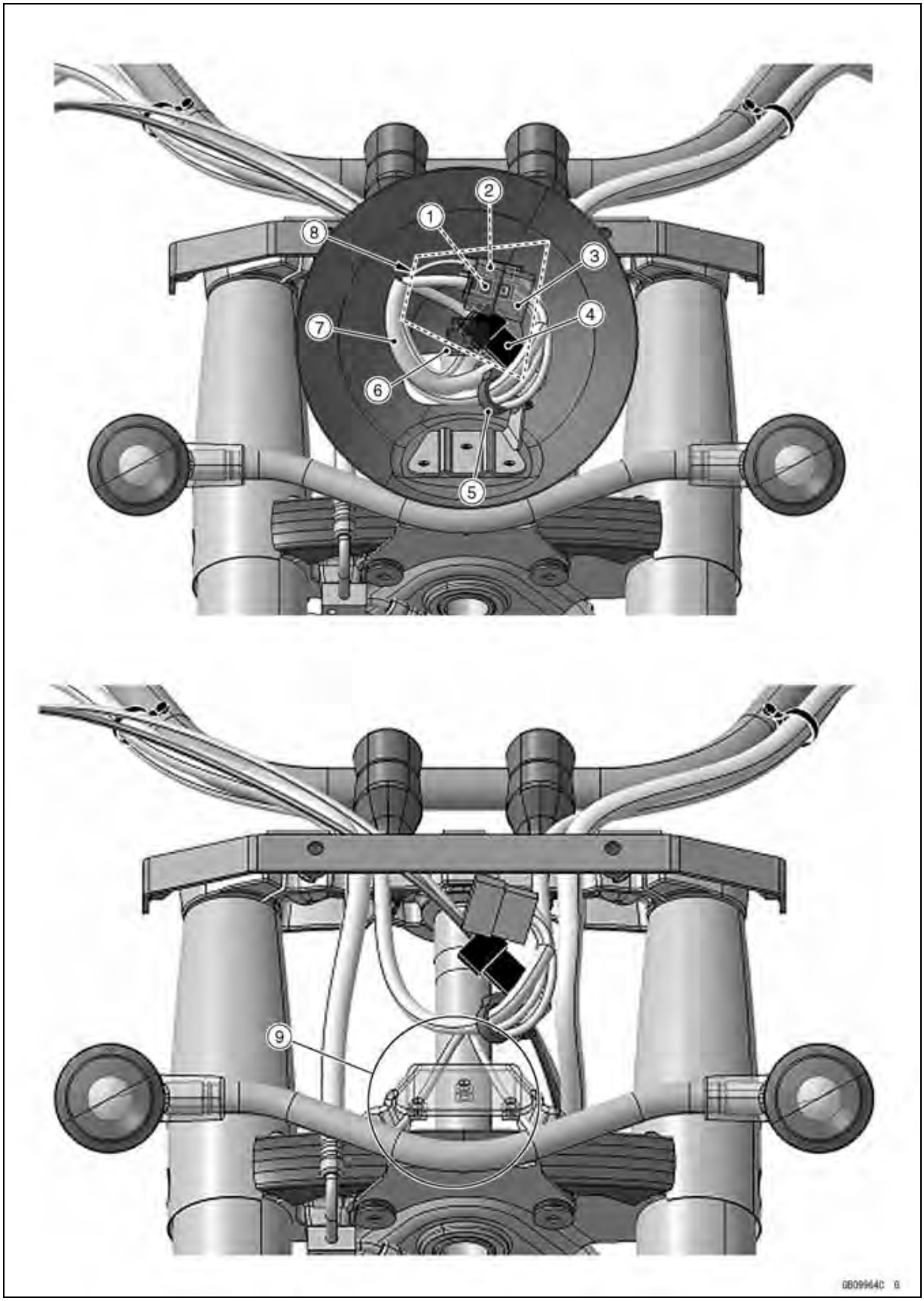

Downloaded from www.vulcanriders-sweden.org

Cable, Wire, and Hose Routing

1. Front Left Turn Signal Light Lead Connector (Black)
2. Front Right Turn Signal Light Lead Connector (Gray)
3. Right Switch Housing Lead Connector (White)
4. Left Switch Housing Lead Connector (Black)
5. Clamp (Clamp the front left and right turn signal light leads and left and right switch housing leads.)
6. Headlight
7. Main Harness
8. Cover the front left and right turn signal light lead connectors and left and right switch housing lead connectors with the cover of the main harness attachment after the lead connectors are connected.
9. Run the front left and right turn signal light leads inside the headlight bracket and install them into the headlight housing.

Downloaded from www.vulcanriders-sweden.org

Cable, Wire, and Hose Routing

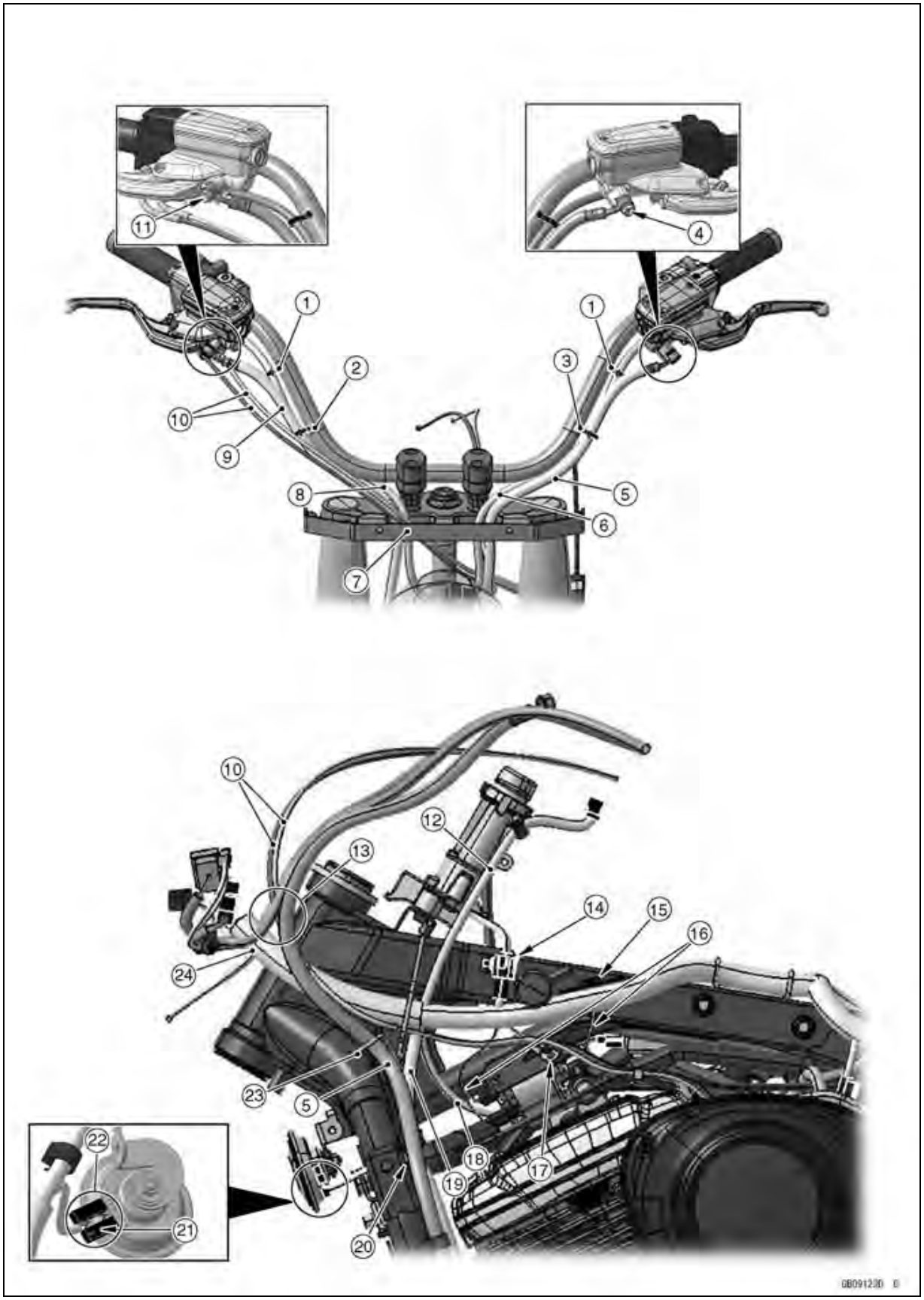

Downloaded from www.vulcanriders-sweden.org

Cable, Wire, and Hose Routing

1. Clamps (Clamp the left or right switch housing leads.)
2. Clamp (Clamp the right switch housing lead and front brake hose.)
3. Clamp (Clamp the left switch housing lead and clutch hose.)
4. Install the clutch hose in the direction as shown.
5. Clutch Hose
6. Left Switch Housing Lead
7. Run the front brake hose, right switch housing lead, and throttle cables between the right side of the bracket and steering stem head, and run the left switch housing lead and clutch hose between the left side of the bracket and the steering stem.
8. Right Switch Housing Lead Connector
9. Brake Hose
10. Throttle Cables
11. Install the brake hose in the direction as shown.
12. Run the meter lead between the front dent of the fuel tank and the left side of the ignition switch (Put in the slack mater lead between the ignition switch rearward and fuel tank.).
13. Run the throttle cables inside of the clutch hose and switch housing lead, and run the cables forward of the head pipe and to the right side of the frame.
14. Insert the ignition switch lead connector (main harness side) to the welding clamp of the frame from the rear side of the frame as shown.
15. Insert the clamp of the main harness to the welding clamp of the frame.
16. Connect the ignition coil lead connectors so that the red/green leads face outside of the frame (front and rear).
17. Tighten the ignition coil mounting bolt together with the engine ground terminal.
18. Run the main harness for air switching valve between the front and rear ignition coils.
19. Harness to the downtube.
20. Clamp (Clamp the harness.)
21. Projection
22. Connect the horn connectors so that the projection of the connector faces rear side of the frame as shown.
23. Clamp (Clamp the main harness, clutch hose, and throttle cables.)
24. Main Harness

Downloaded from www.vulcanriders-sweden.org

Cable, Wire, and Hose Routing

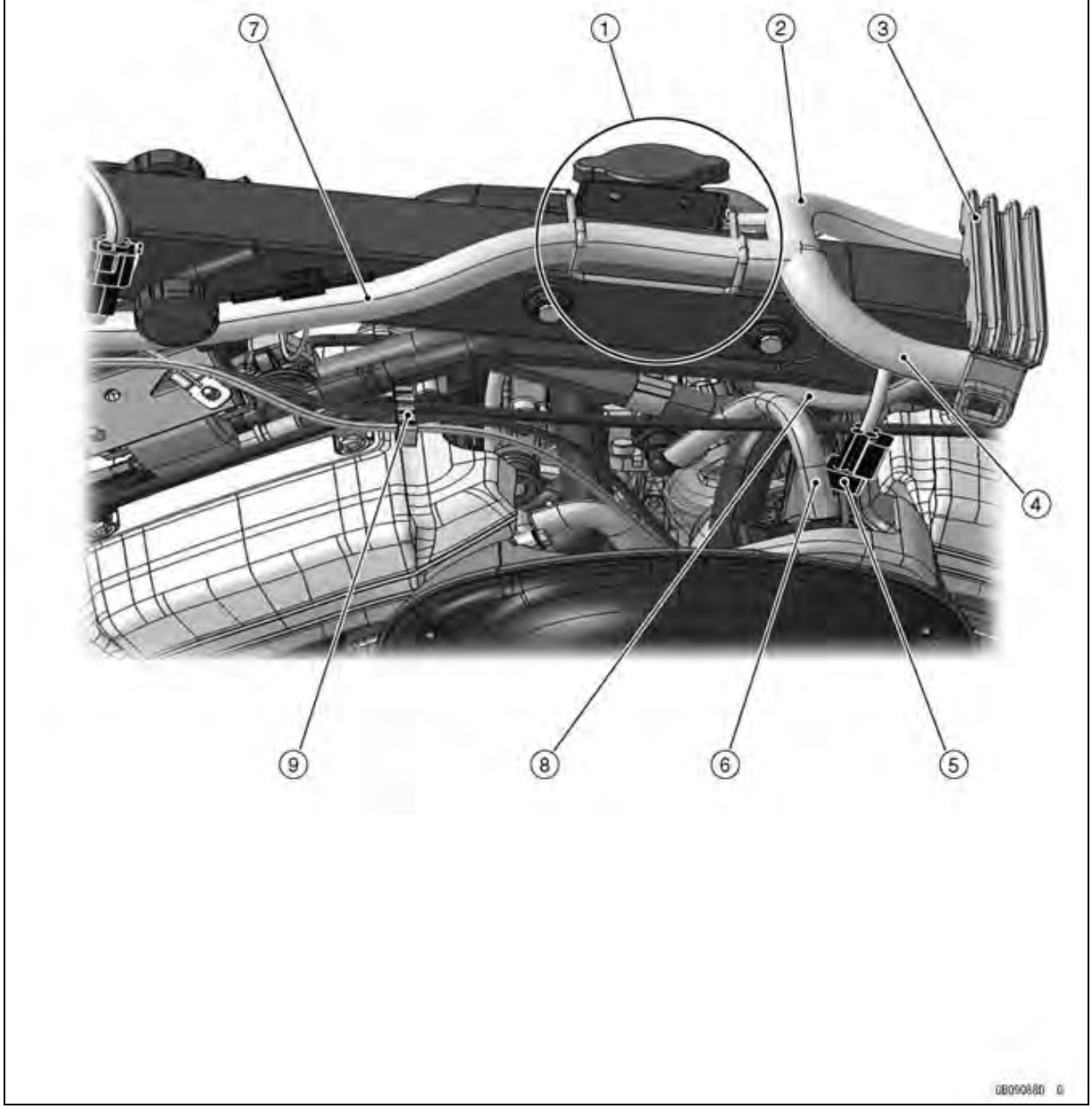

Downloaded from www.vulcanriders-sweden.org

Cable, Wire, and Hose Routing

1. Clamp the main harness with the thermostat housing bracket.
2. Run the main harness for the fuse box to the right side of the frame.
3. Clamp the left side and right side main harness, and reserve tank hose (at left side) with the damper.
4. Run the main harness for ECU to the left side of the frame.
5. Connect the fuel pump lead connector, and put it under the fuel hose.
6. Fuel Hose
7. Main Harness
8. Reserve Tank Hose
9. Clamp (Clamp the ignition coil leads and throttle cables.)

Downloaded from www.vulcanriders-sweden.org

Cable, Wire, and Hose Routing

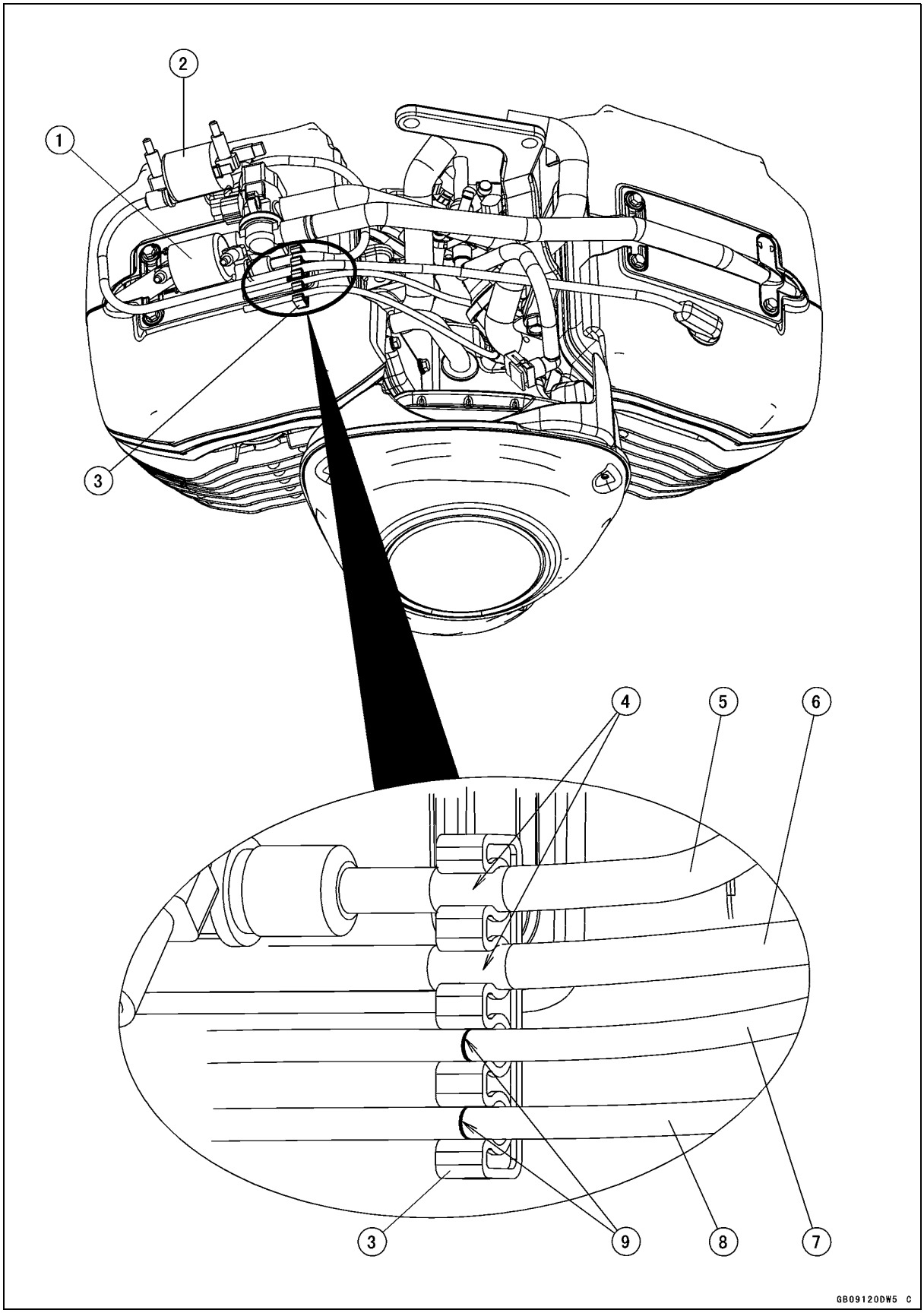

Downloaded from www.vulcanriders-sweden.org

Cable, Wire, and Hose Routing

1. Ignition Coil #1
2. Ignition Coil #2
3. Clamp (Clamp the ignition coil leads and throttle cables at the lines and tapes portions as shown.)
4. Tapes
5. Ignition Coil #1 Lead
6. Ignition Coil #2 Lead
7. Throttle Cable (Accelerator)
8. Throttle Cable (Decelerator)
9. White Lines

Downloaded from www.vulcanriders-sweden.org

Cable, Wire, and Hose Routing

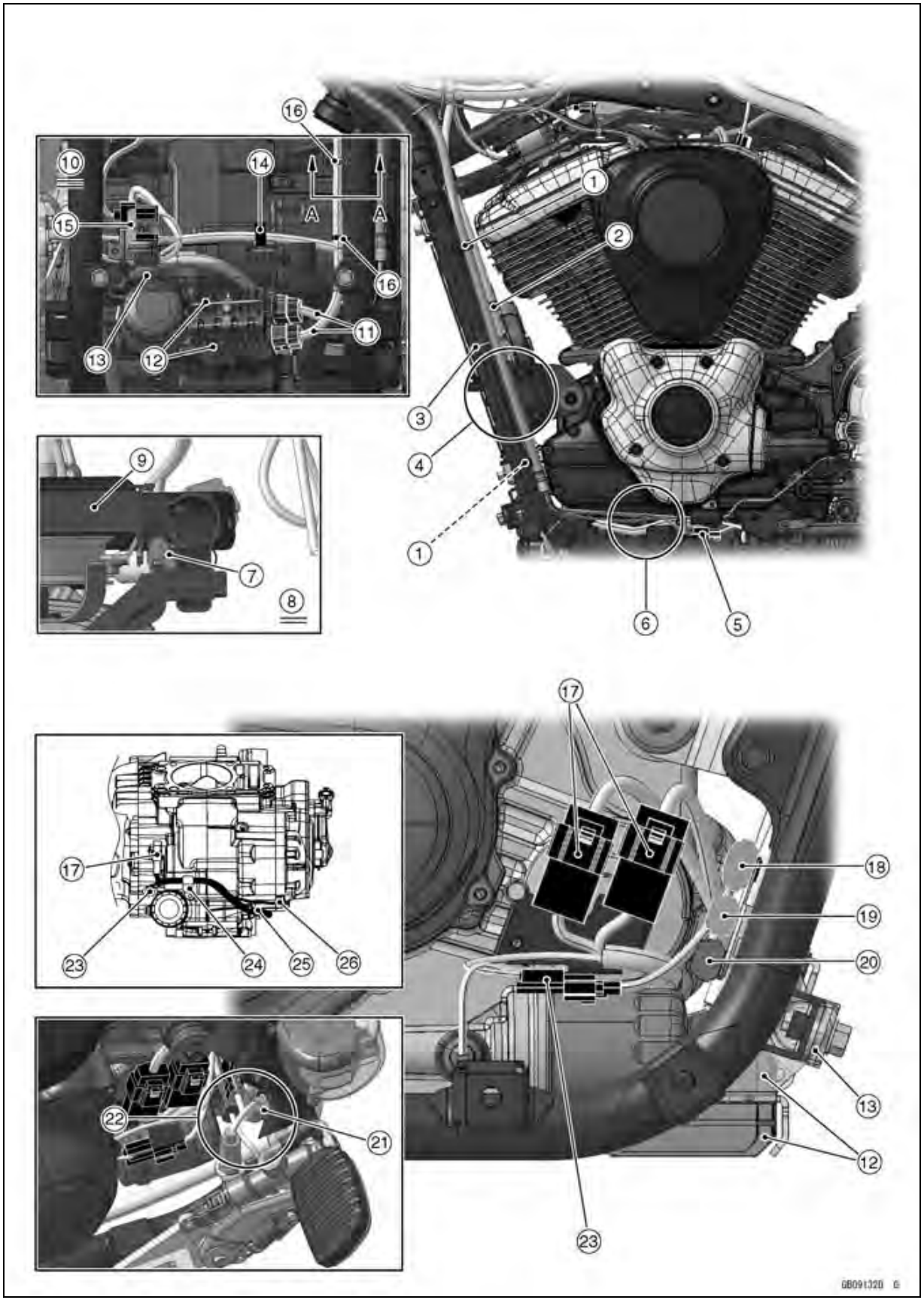

Downloaded from www.vulcanriders-sweden.org

Cable, Wire, and Hose Routing

1. Clamps (Clamp the clutch hose with the welding clamps of the frame. Cover the white paint mark of the clutch hose with the upper clamp.)
2. Clamp (Clamp the main harness.)
3. Clamp (Align the separate portion of the main harness with the top of the engine bracket, and clamp the main harness at the top of the engine bracket together with the frame pipe.)
4. Run the main harness inside of the engine mounting bracket, and run the clutch hose outside of the engine mounting bracket.
5. Insert the sidestand switch lead connector to the clutch hose holding bracket.
6. Run the sidestand switch lead inside of the left front footboard bracket.
7. Clamp (Clamp the main harness in the direction as shown. Do not damage the main harness when installing the radiator.)
8. Viewed from A-A
9. Radiator
10. Viewed from front
11. Run the regulator/rectifier leads under the water pipe. Regulator/rectifier leads do not enter between the downtube and water hose.
12. Regulator/Rectifier
13. Front Cross Pipe
14. Insert the clamp of the harness to the hole of the front cross pipe bracket from upside.
15. Insert the fan motor lead connector (3-pin, black) , rear brake light switch lead connector (2-pin, black) , and cruise control cancel switch (rear brake) lead connector (2-pin, green) to the bracket in order from the top.
16. Clamps (Clamp the main harness.)
17. Alternator Lead Connectors (Each lead connector can be connected to both connectors.)
18. Fan Motor Lead Connector
19. Rear Brake Light Switch Lead Connector
20. Cruise Control Cancel Switch (Rear Brake) Lead Connector
21. Clamp (Clamp the rear brake light switch lead.)
22. Run the rear brake light switch lead and cruise control cancel switch (rear brake) lead over the brake hose.
23. Crankshaft Sensor and Oil Pressure Switch Lead Connector
24. Clamp (Clamp the crankshaft sensor and alternator leads.)
25. Alternator Lead
26. Crankshaft Sensor Lead

Downloaded from www.vulcanriders-sweden.org

Cable, Wire, and Hose Routing

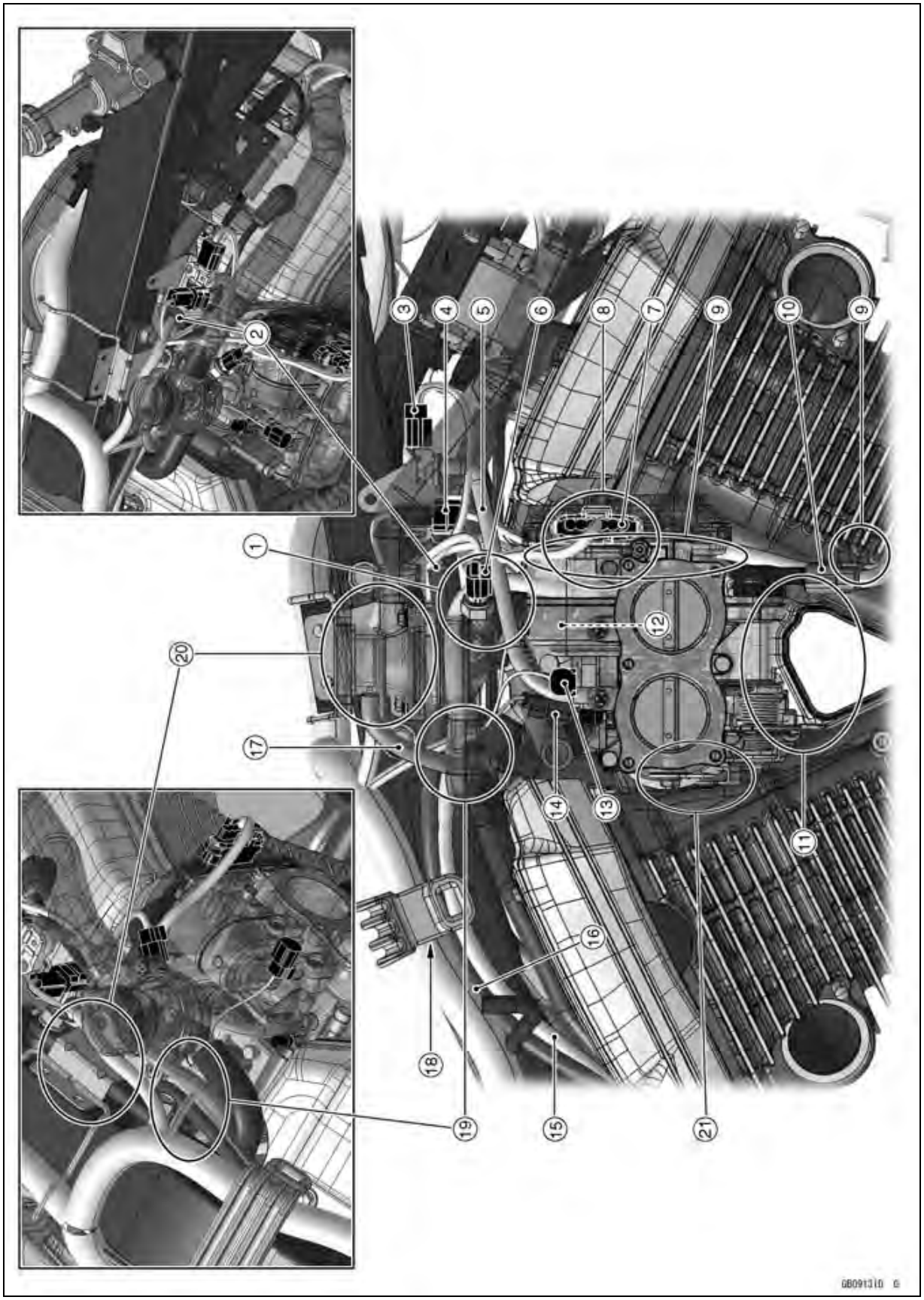

Downloaded from www.vulcanriders-sweden.org

Cable, Wire, and Hose Routing

1. Run the white hose (vacuum) inside of the inlet air pressure sensor vacuum hose, and over the water hose, and rear side of the frame as shown (CAL and SEA models).
2. Clamp (Clamp the harness for throttle position sensors and accelerator position sensors, and insert the clamp into the bracket hole.)
3. Inlet Air Pressure Sensor Connector
4. Insert the cruise control cancel switch (throttle) lead connector to the bracket.
5. Vacuum Hose of the Inlet Air Pressure Sensor
6. Water Temperature Sensor Lead Connector
7. Throttle Position Sensor Lead Connector
8. When installing the air cleaner housing, hold the throttle position sensor lead backward so as not to pinch the lead with the air cleaner housing.
9. Run the accelerator position sensor lead to inside of the engine fins and throttle body after connecting the connector, so as not to pinch the lead with the air cleaner housing and engine fins.
10. Accelerator Position Sensor Lead Connector
11. Take care not to pinch the accelerator position sensor lead with the air cleaner connection ducts.
12. Fuel Injector Lead Connector (#1, Gray)
13. Inlet Air Temperature Sensor Lead Connector
14. Fuel Injector Lead Connector (#2, Brown)
15. White Hose (Vacuum, CAL and SEA Models)
16. Green Hose (Purge, CAL and SEA Models)
17. Reserve Tank Hose
18. Clamp the white hose (Vacuum) and green hose (Purge) together with the main harness with the damper (CAL and SEA Models).
19. Run the harness for fuel injectors to inside of the water hose and reserve tank hose, and outside of the green hose (purge) and white hose (vacuum). Run the reserve tank hose to inside of the water hose and under the green hose (purge) and white hose (vacuum).
20. Run the harness to between the thermostat housing bracket and thermostat housing.
21. Run the throttle cables under the inlet manifold.

Downloaded from www.vulcanriders-sweden.org

Cable, Wire, and Hose Routing

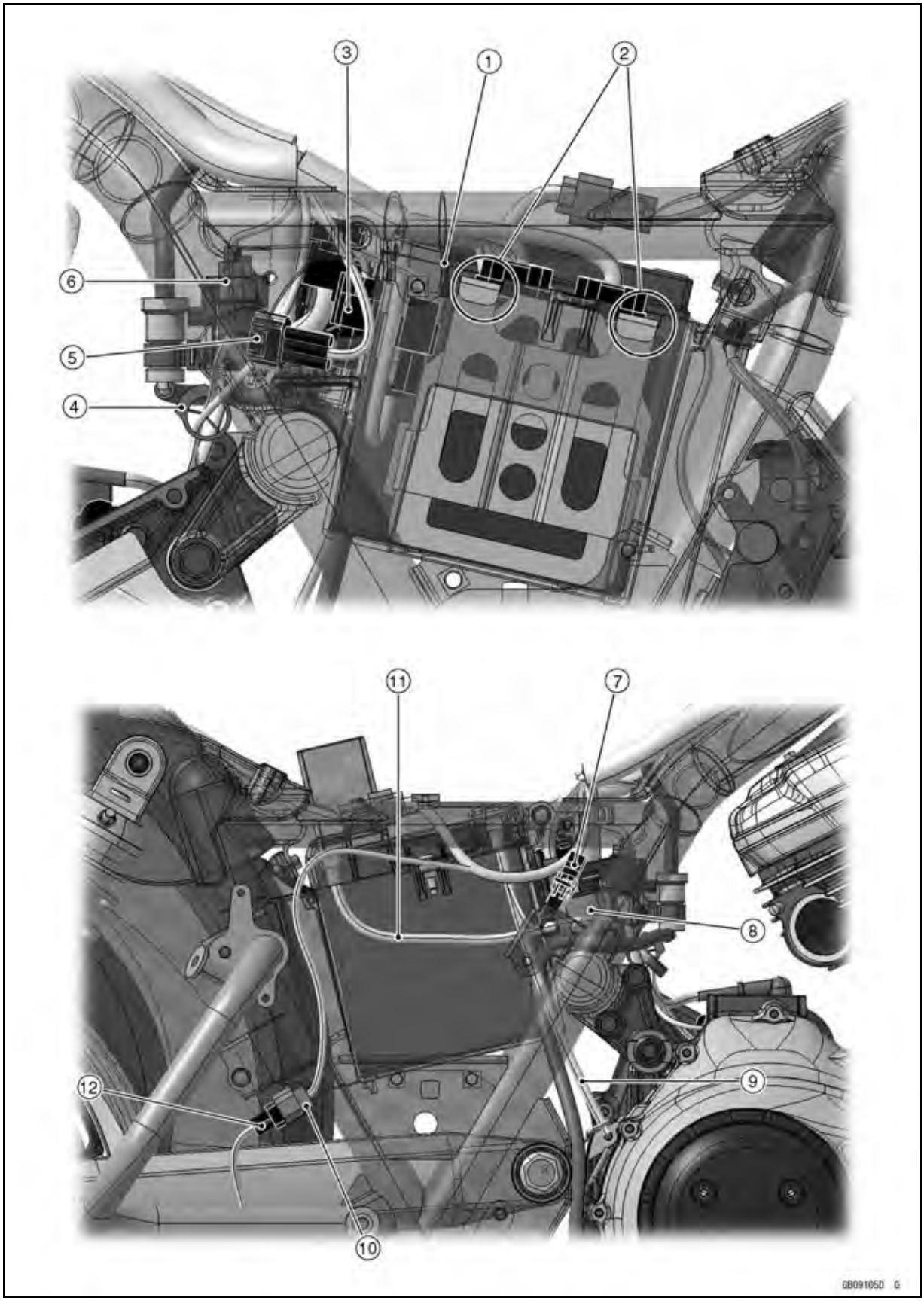

Downloaded from www.vulcanriders-sweden.org

Cable, Wire, and Hose Routing

1. Turn Signal Control Relay
2. Assemble the damper of the ECU and Relay Box to the bracket, and insert the bracket hooks to the grooves of the battery case.
3. Kawasaki Diagnostic System Connector
4. Clamp (Insert the clamp to the front left side hole of the battery case, and clamp the speed sensor lead and gear position switch lead.)
5. Gear Position Switch Lead Connector
6. Vehicle-down Sensor
7. Connect the battery negative (–) lead connector (black), and put it into the right side of the starter relay.
8. Starter Relay
9. Battery Negative (–) Cable
10. Insert the oxygen sensor lead connector to the welding bracket of the frame (Other than US and CA models).
11. Battery Positive (+) Cable
12. Oxygen Sensor Lead Connector

Downloaded from www.vulcanriders-sweden.org

Cable, Wire, and Hose Routing

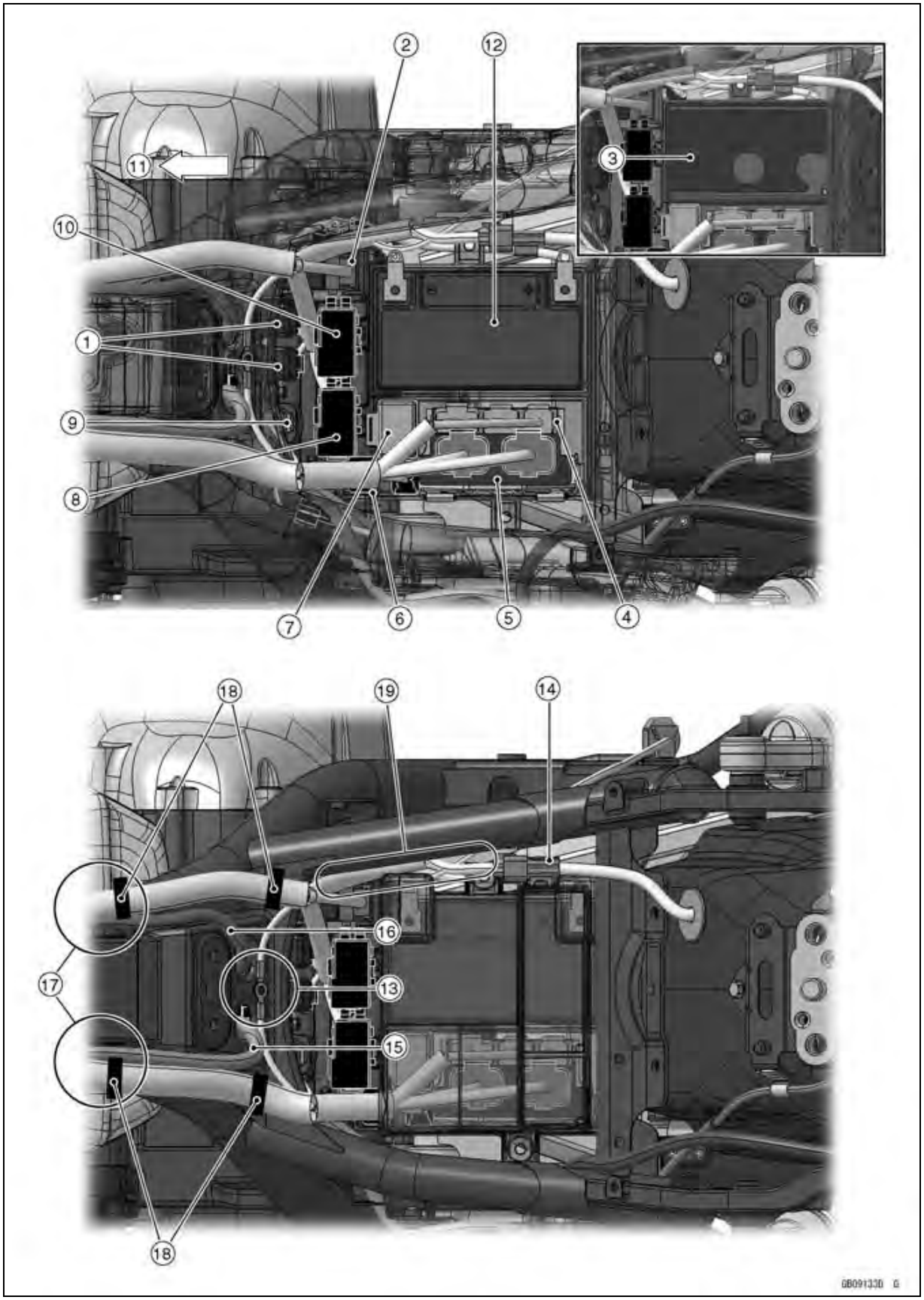

Downloaded from www.vulcanriders-sweden.org

Cable, Wire, and Hose Routing

1. Insert the accessory relay and ETV motor relay to the projections of the battery case so that the connectors of the relays face downward. The positions of the two relays can be switched.
2. Starter Relay
3. Stick the damper on the battery case as shown.
4. Relay Box
5. ECU
6. Kawasaki Diagnostic System Connector
7. Install the turn signal control relay so that its connector faces downward.
8. Fuse Box 2
9. Vehicle-down Sensor
10. Fuse Box 1
11. Front
12. Battery
13. Tighten the frame ground terminals together from the left side and right side main harness.
14. Insert the rear sub harness connector to the projection of the tool case.
15. Run the reserve tank hose through into the left hole of the frame bracket.
16. Run the breather hose through into the right hole of the frame bracket.
17. Run the breather hose and reserve tank hose through from inside of the main harness to the lower side, at the front of the front clamps.
18. Insert the clamps of the main harness to the holes of the frame pipe.
19. Run each harness under the battery cover, and do not run them over the frame pipe.

Downloaded from www.vulcanriders-sweden.org

Cable, Wire, and Hose Routing

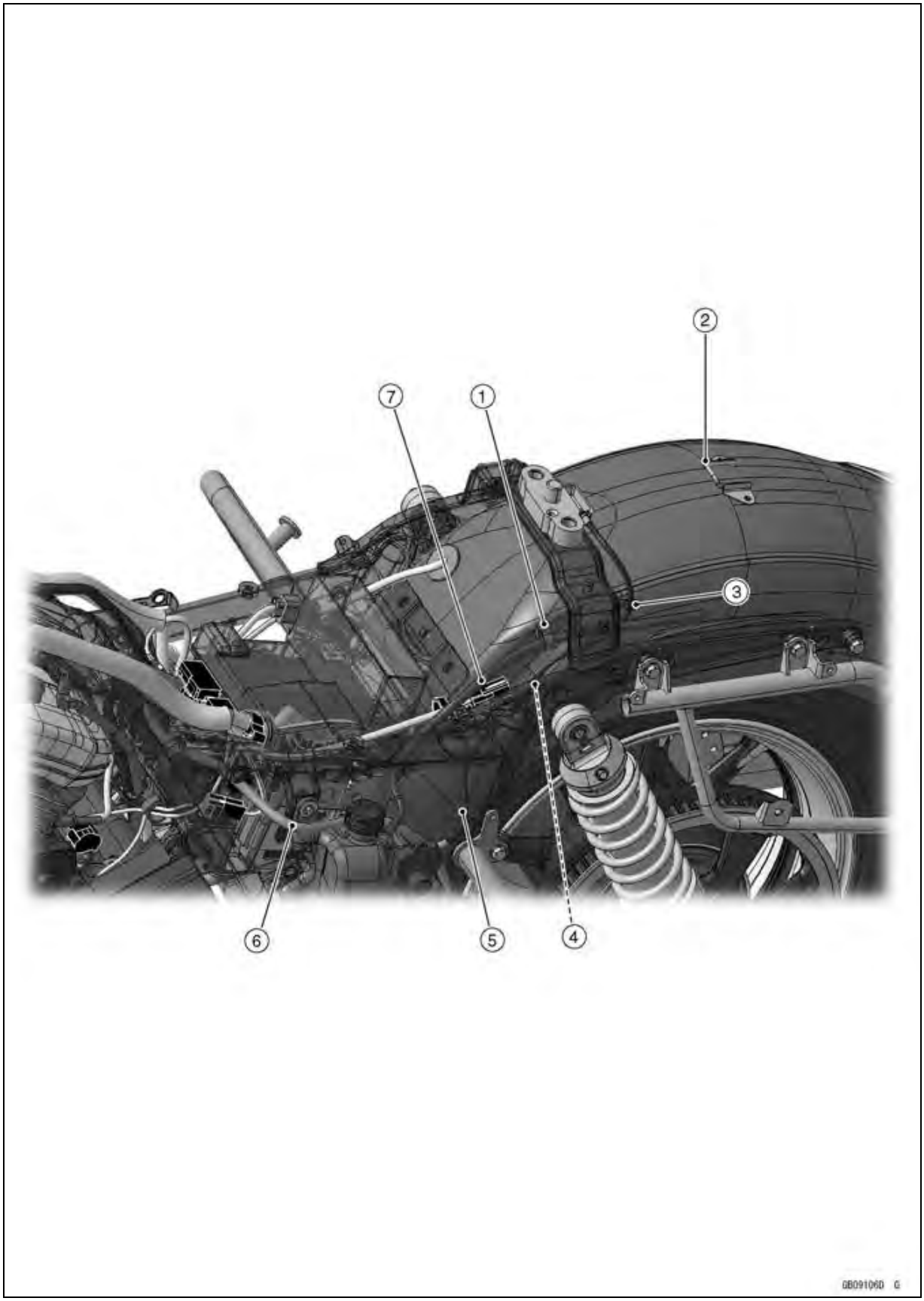

Downloaded from www.vulcanriders-sweden.org

Cable, Wire, and Hose Routing

1. Clamp (Clamp the reserve tank overflow hose.)
2. Install the seat bracket so that the wire faces front side as shown.
3. Clamp (Clamp the red painted portion of the seat lock cable.)
4. Clamp (Clamp the seat lock cable.)
5. Assemble the seat lock cable so that the protector side faces side cover.
6. Reserve Tank Hose
7. Reserve Tank Overflow Hose

Downloaded from www.vulcanriders-sweden.org

Cable, Wire, and Hose Routing

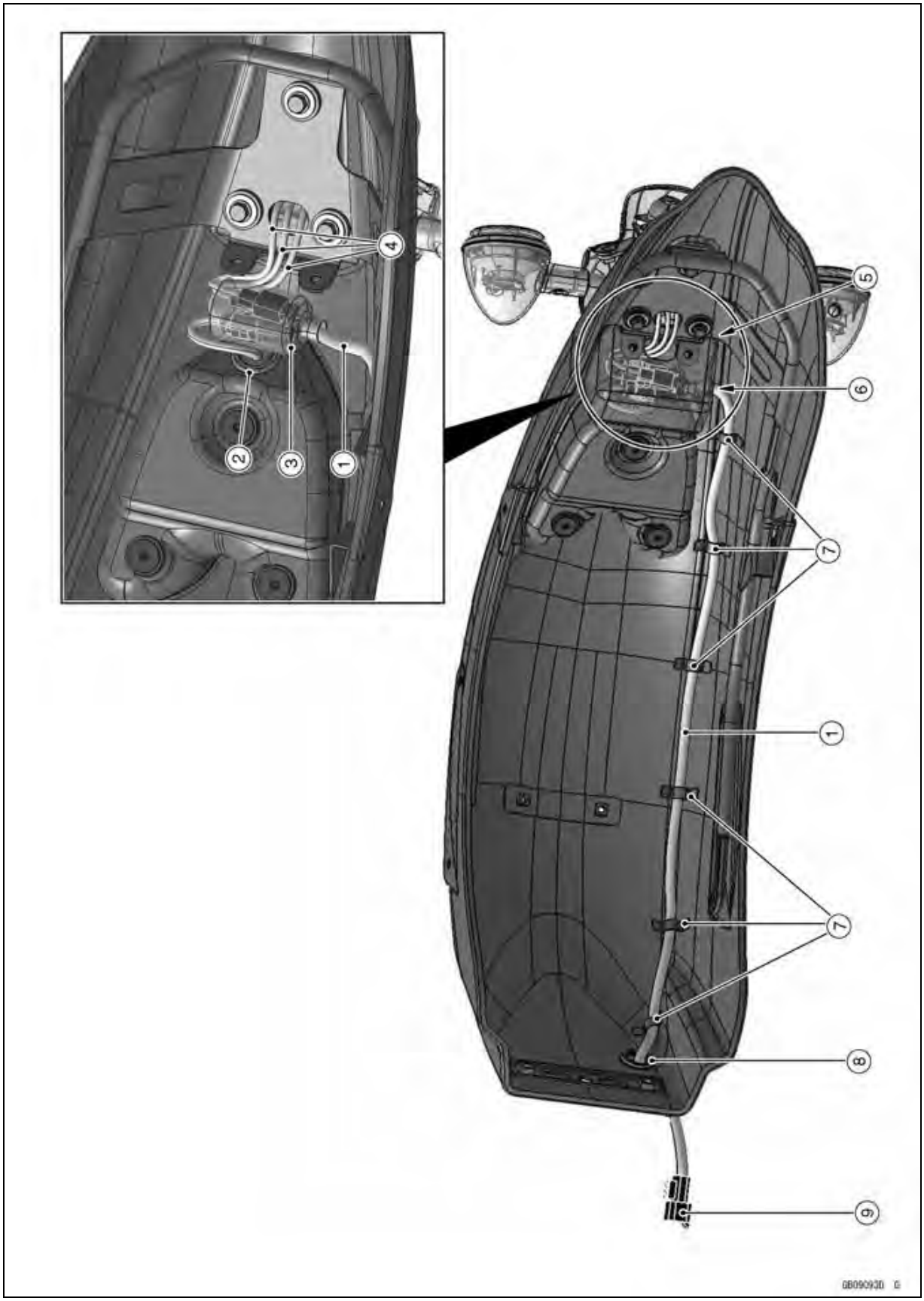

Downloaded from www.vulcanriders-sweden.org

Cable, Wire, and Hose Routing

1. Rear Sub Harness (for Rear Left and Right Turn Signal Lights, License Plate Light, and Tail/Brake Light)
2. Put the tail/brake light lead into the grommet, and insert the grommet to the rear fender hole.
3. Connect the tail/brake light lead connector, rear left and right turn signal light lead connector, and license plate light lead connector, and then insert them into the cover of the rear sub harness.
4. Rear Left and Right Turn Signal Light Leads and License Plate Light Lead
5. Cover
6. Run the rear sub harness to the groove of the cover.
7. Clamp the rear sub harness with the welding clamps of the rear fender.
8. Put the 6-pin connector into the grommet, and insert the grommet to the rear fender hole.
9. 6-pin Connector

Downloaded from www.vulcanriders-sweden.org

Cable, Wire, and Hose Routing

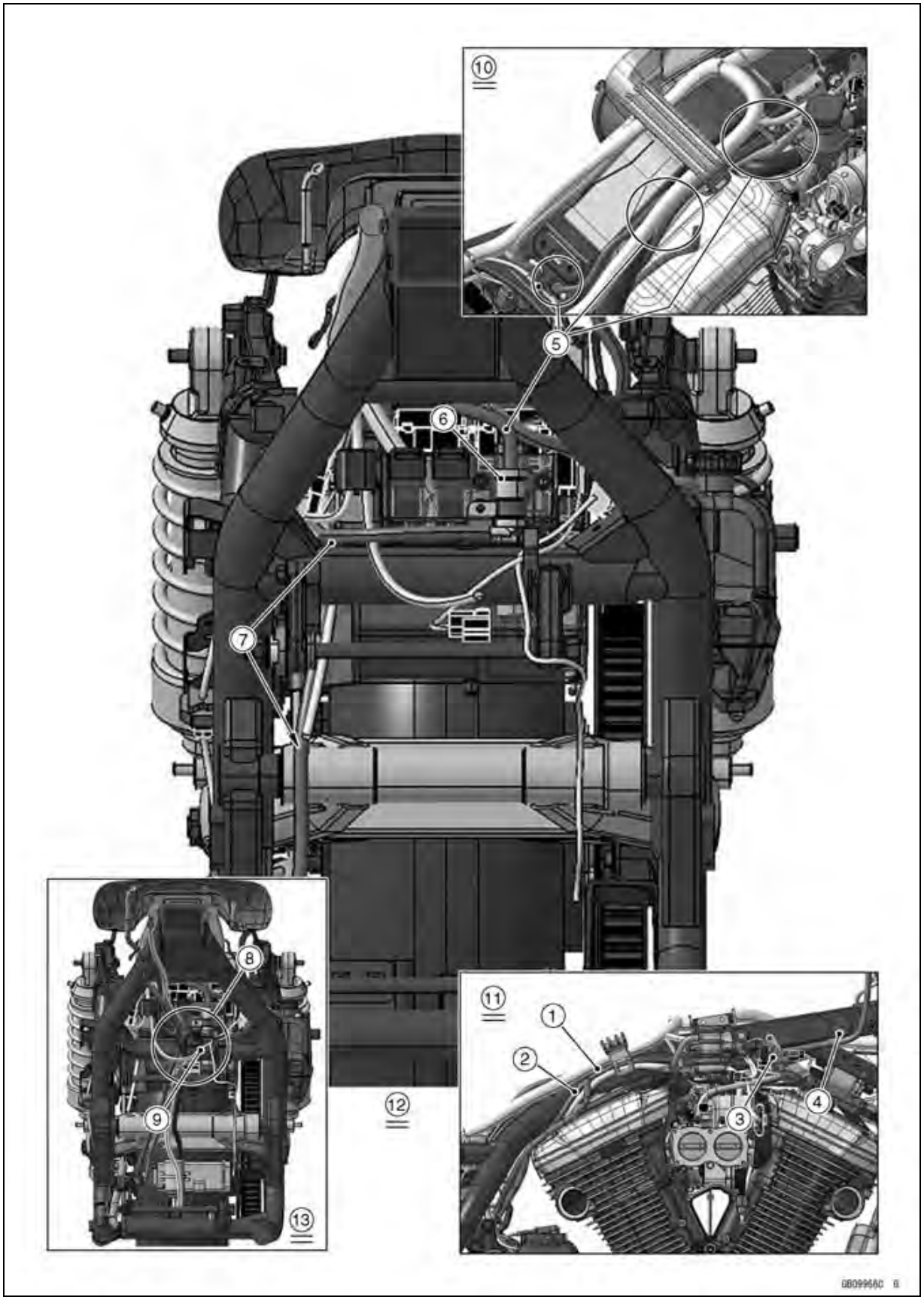

Downloaded from www.vulcanriders-sweden.org

Cable, Wire, and Hose Routing

1. Purge Hose (Green)
2. Vacuum Hose (White)
3. Inlet Air Pressure Sensor Bracket
4. Damper (Right)
5. Run the breather hose (blue) into the right side hole of the frame, and inside of the front harness clamp, injector lead, cylinder head mounting bracket and inlet air pressure sensor bracket, and run it to the front of the damper (right) and connect it to the fuel tank breather pipe. Run the breather hose (blue) inside of the purge hose (green) and the vacuum hose (white). (CAL and SEA Models)
6. Check Valve
7. Run the breather hose (blue) to backward of the upper cross pipe as shown, and forward of the swingarm pivot cross pipe and rear brake hose clamp bracket, and backward of the lower cross pipe and out of the rear right lower engine mounting bracket.
8. Run the all of the evaporative emission control system hoses to rear side of the speed sensor lead and starter motor cable.
9. Clamp (Run the three evaporative emission control system hoses (except blue hose) into the clamp and to hole of the battery case.)
10. Viewed from upper right
11. Viewed from right
12. Viewed from front
13. CAL and SEA Models

Downloaded from www.vulcanriders-sweden.org

Cable, Wire, and Hose Routing

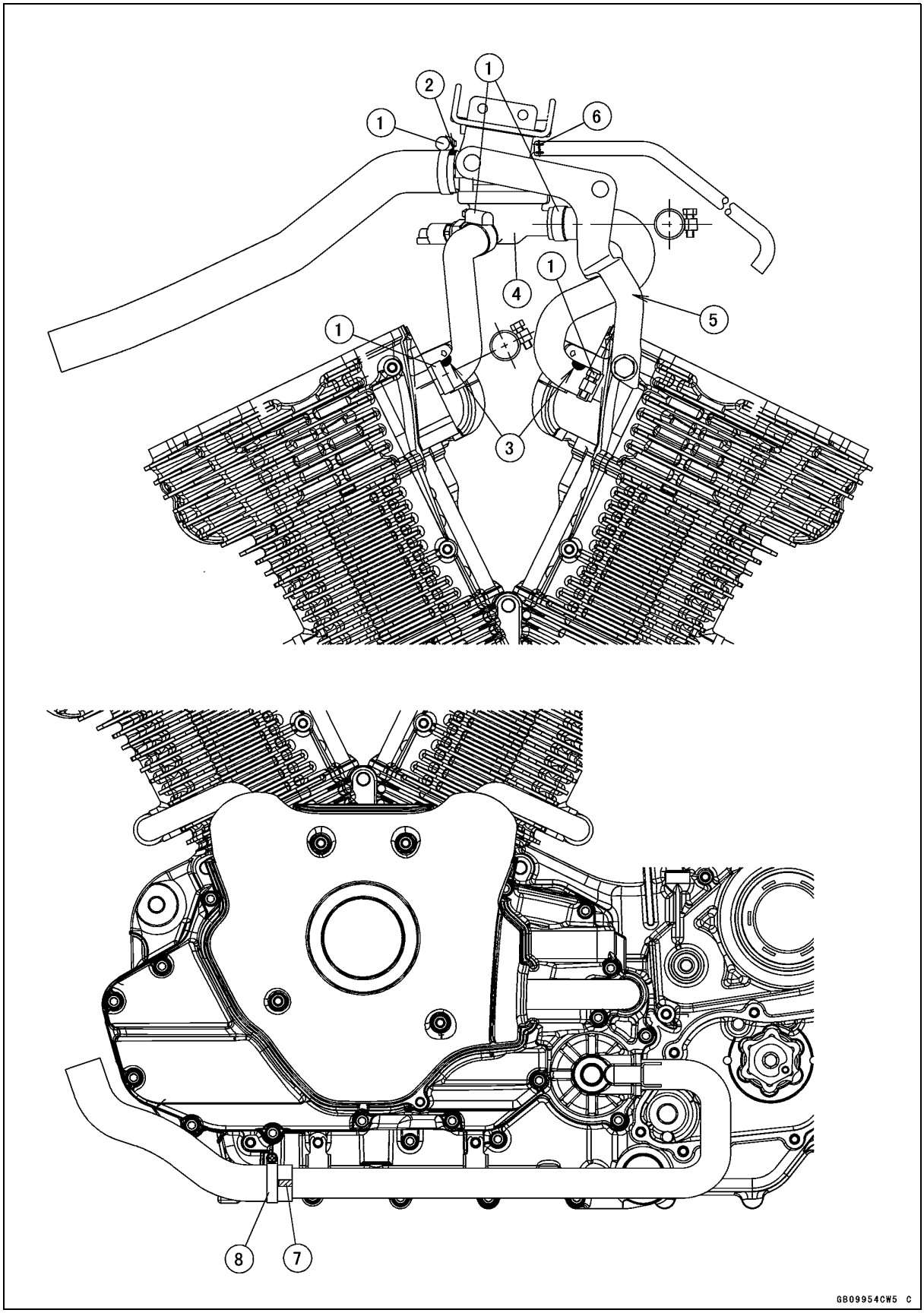

Downloaded from www.vulcanriders-sweden.org

Cable, Wire, and Hose Routing

1. Clamps (Install the clamps so that the screw heads face each direction as shown.)
2. White Paint Mark (Install the radiator hose to the thermostat housing so that the white paint mark on the hose faces upside.)
3. White Paint Marks (Install the water hoses to the cylinder heads so that the white paint marks on the hoses face upside.)
4. Thermostat Housing
5. Run the water hose inside of the bracket.
6. Clamp (Install the clamp so that the knob faces left side.)
7. White Paint Mark (Install the radiator hose so that the white paint mark on the hose faces left side.)
8. Clamp (Install the clamp so that the screw head faces left side.)

Downloaded from www.vulcanriders-sweden.org

Cable, Wire, and Hose Routing

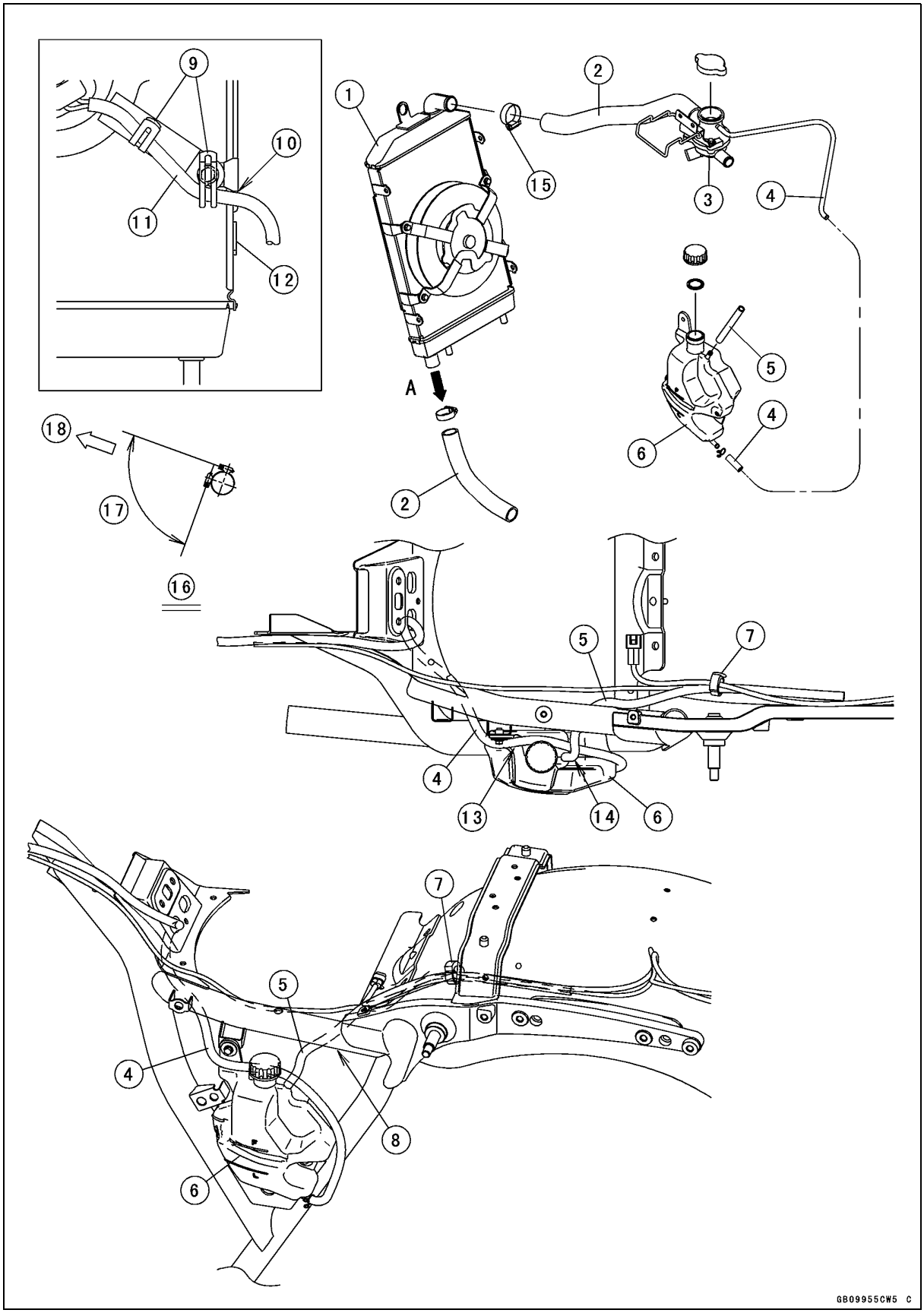

Downloaded from www.vulcanriders-sweden.org

Cable, Wire, and Hose Routing

1. Radiator
2. Radiator Hoses
3. Thermostat Housing
4. Reserve Tank Hose
5. Reserve Tank Overflow Hose
6. Reserve Tank
7. Run the reserve tank overflow hose to between the frame bracket and rear fender cover as shown.
8. Run the reserve tank overflow hose under the frame pipe as shown.
9. Clamps
10. Run the radiator fan lead to this portion.
11. Radiator Fan Lead
12. Bracket for Radiator Screen
13. Run the reserve tank hose as shown.
14. Insert the reserve tank overflow hose in the direction as shown.
15. Install the clamp so that the clamp screw faces downward.
16. Viewed form A
17. Within 90°
18. Front

Downloaded from www.vulcanriders-sweden.org

Cable, Wire, and Hose Routing

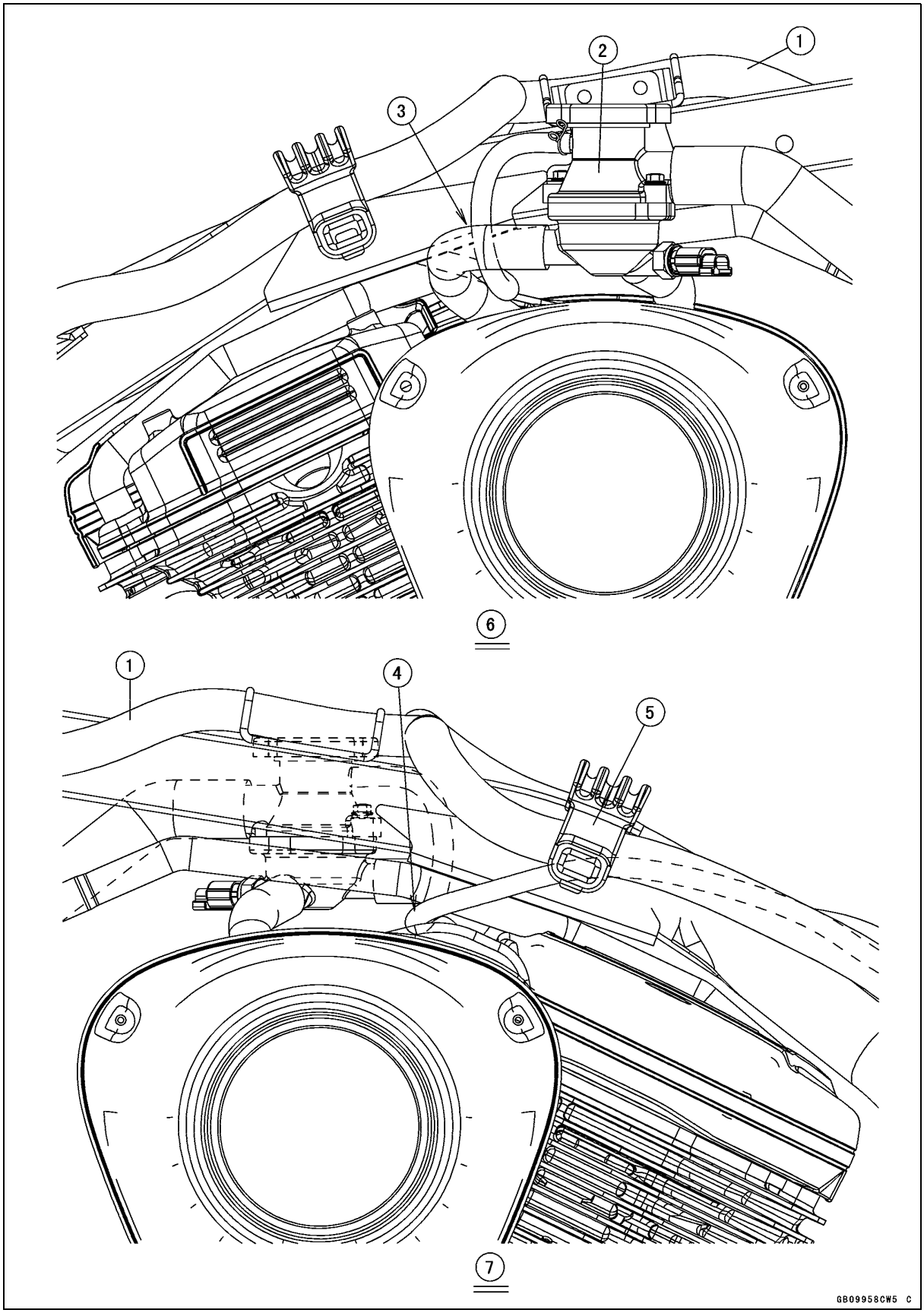

Downloaded from www.vulcanriders-sweden.org

Cable, Wire, and Hose Routing

1. Main Harness
2. Thermostat Housing
3. Run the reserve tank hose between the water hose and frame pipe as shown.
4. Run the reserve tank hose under the air switching valve hose as shown.
5. Fix the reserve tank hose together with main harness with the damper.
6. Right Side
7. Left Side

Downloaded from www.vulcanriders-sweden.org

Cable, Wire, and Hose Routing

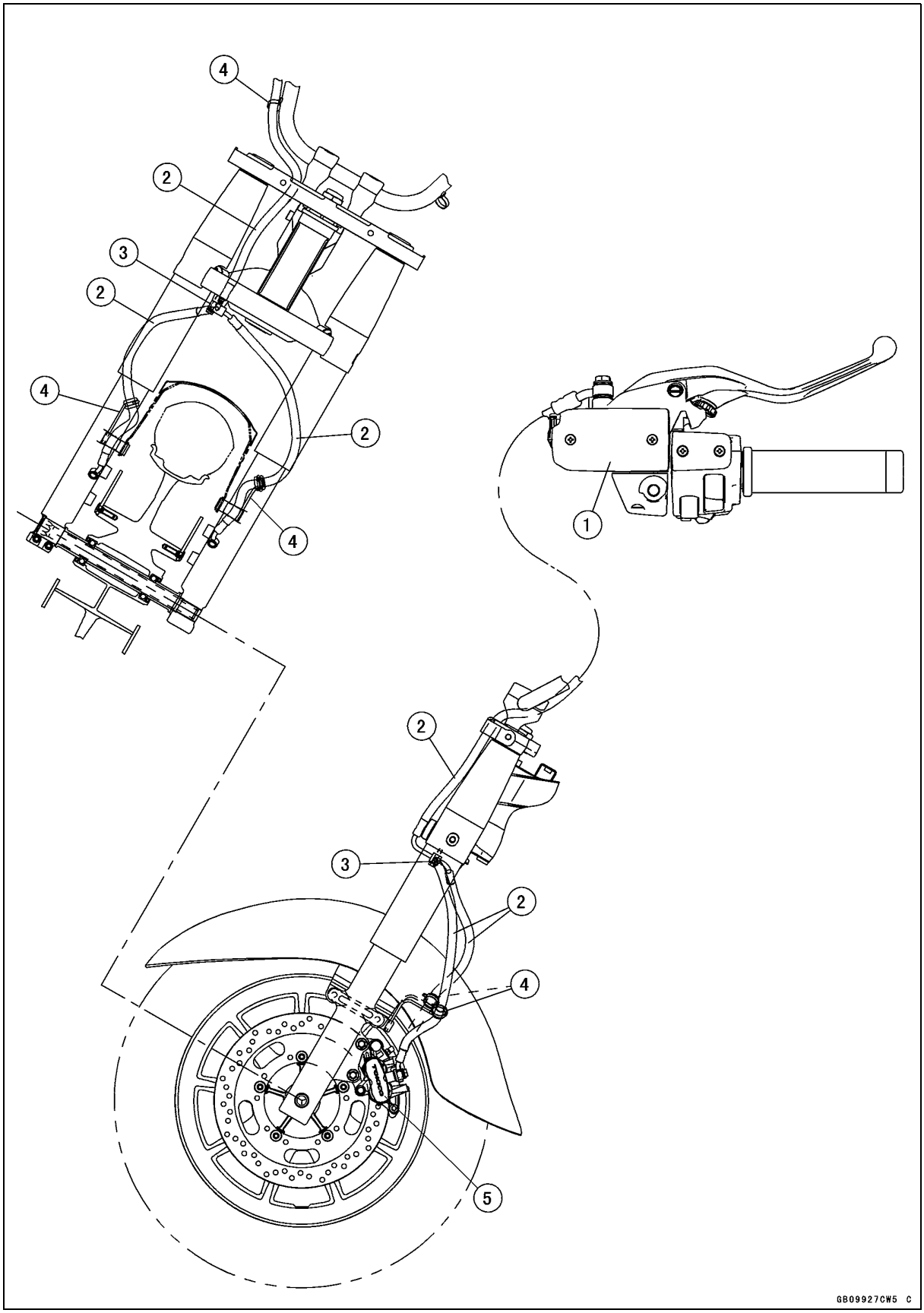

Downloaded from www.vulcanriders-sweden.org

Cable, Wire, and Hose Routing

1. Front Brake Master Cylinder
2. Brake Hoses
3. Three-way Joint of Hose Assembly
4. Clamps (Hold the brake hoses.)
5. Front Brake Caliper

Downloaded from www.vulcanriders-sweden.org

Cable, Wire, and Hose Routing

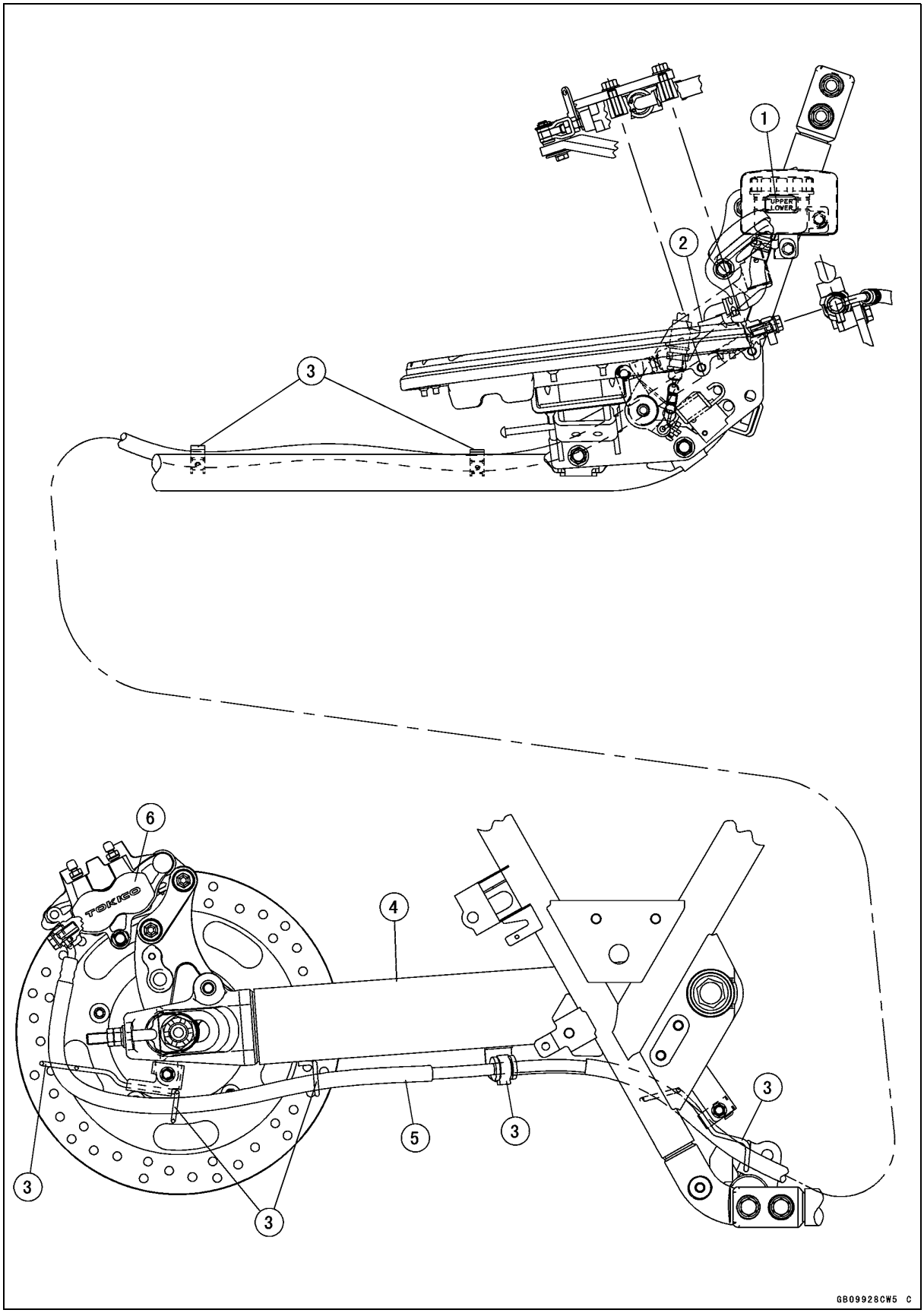

Downloaded from www.vulcanriders-sweden.org

Cable, Wire, and Hose Routing

1. Rear Brake Reservoir tank
2. Rear Brake Master Cylinder
3. Clamps (Hold the brake hose.)
4. Swingarm
5. Brake Hose
6. Rear Brake Caliper

Downloaded from www.vulcanriders-sweden.org

Cable, Wire, and Hose Routing

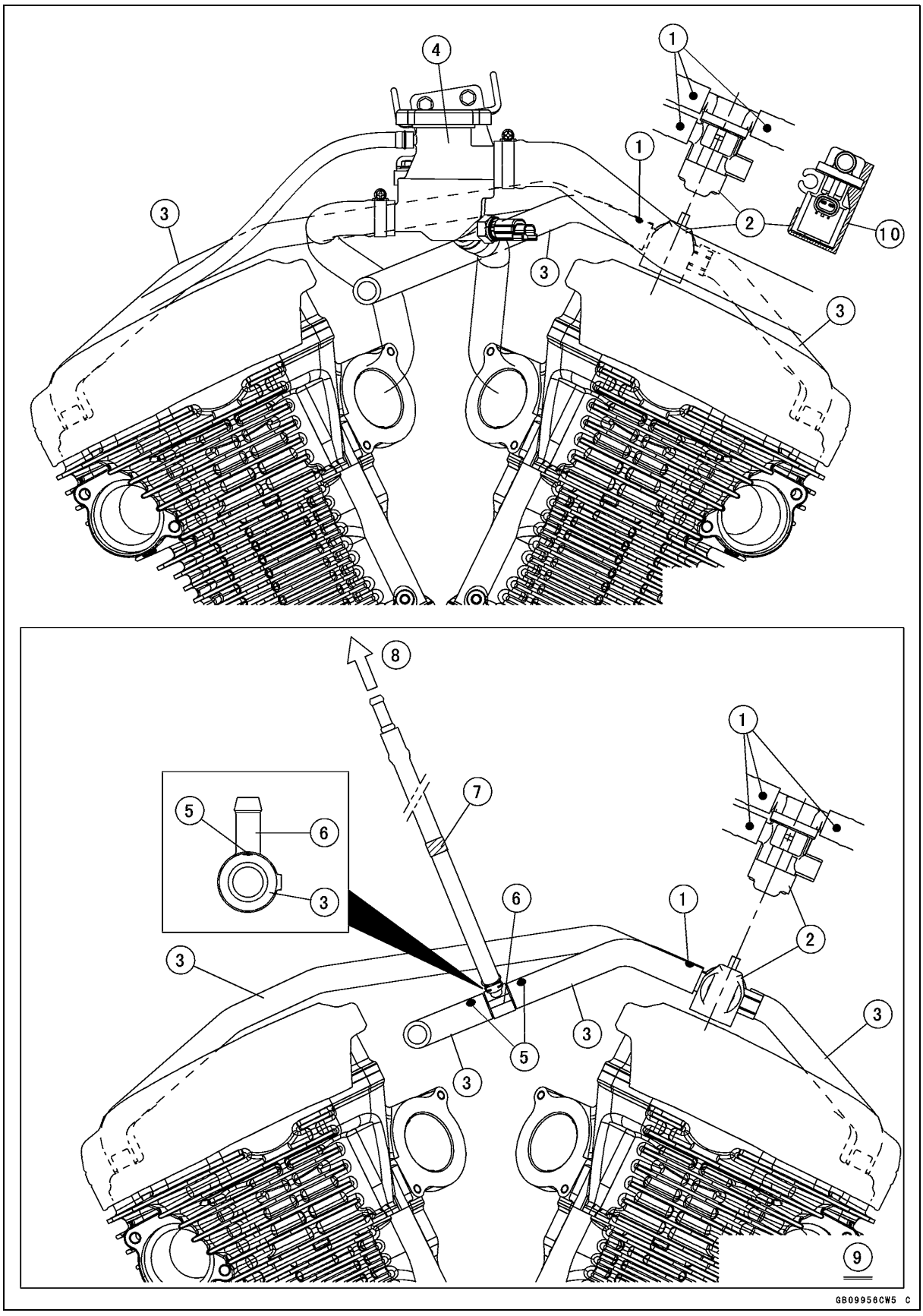

Downloaded from www.vulcanriders-sweden.org

Cable, Wire, and Hose Routing

1. White Paint Marks (Insert the air switching valve hoses to the air switching valve so that the white paint marks of the hoses face upside.)
2. Air Switching Valve
3. Air Switching Valve Hoses
4. Thermostat Housing
5. Red Paint Marks (Align the red paint marks with the fitting pipe as shown.)
6. Fitting
7. Green Tape
8. To the green tape hose of the canister
9. CAL and SEA Models
10. Damper

Downloaded from www.vulcanriders-sweden.org

Cable, Wire, and Hose Routing

CAL and SEA Models

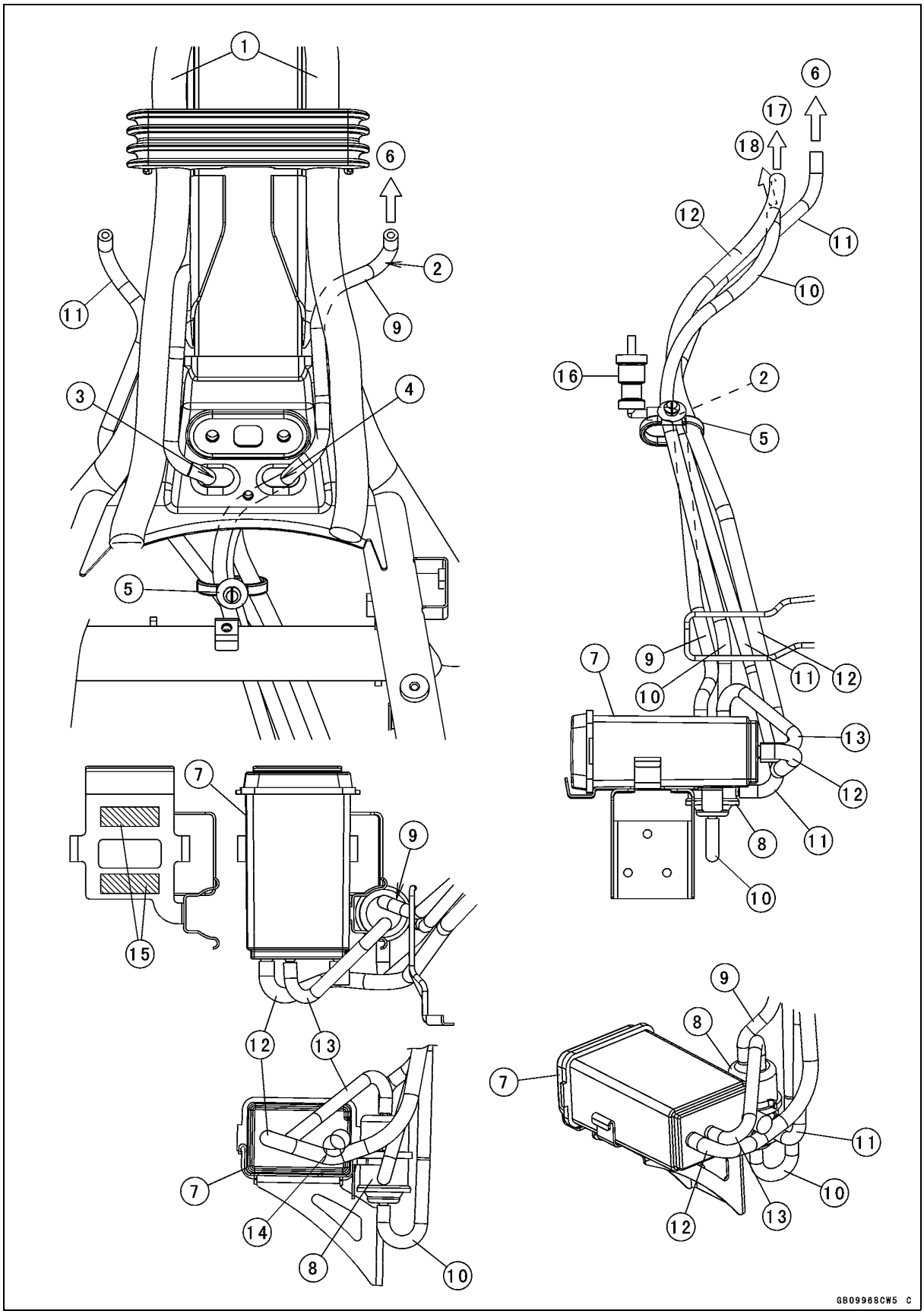

Downloaded from www.vulcanriders-sweden.org

Cable, Wire, and Hose Routing

1. Main Harness
2. Curve Side
3. Run the reserve tank hose through into the left hole of the frame bracket as shown.
4. Run the blue hose (breather) through into the right hole of the frame bracket as shown.
5. Clamp (Clamp the hoses and insert the clamp to the frame.)
6. To Fuel Tank
7. Canister
8. Separator
9. Blue Hose (Breather)
10. White Hose (Vacuum)
11. Red Hose (Return)
12. Green Hose (Purge)
13. Blue Hose (Breather)
14. Insert the green hose (Purge) so that the hose contacts the plug.
15. Put the dampers on the canister bracket as shown.
16. Breather Check Valve
17. To the green tape hose fitting of the air switching valve
18. To the fitting of the throttle body hose (white)

Downloaded from www.vulcanriders-sweden.org

Troubleshooting Guide

NOTE

○*Refer to the Fuel System (DFI) chapter for most of DFI trouble shooting guide.*

○*This is not an exhaustive list, giving every possible cause for each problem listed. It is meant simply as a rough guide to assist the troubleshooting for some of the more common difficulties.*

Engine Doesn't Start, Starting Difficulty:

Starter motor not rotating:
- Ignition and engine stop switch not ON
- Starter lockout switch or gear position switch trouble
- Starter motor trouble
- Battery voltage low
- Starter relay not contacting or operating
- Starter button not contacting
- Starter system wiring open or shorted
- Ignition switch trouble
- Engine stop switch trouble
- Main 30 A or ignition fuse blown

Starter motor rotating but engine doesn't turn over:
- Vehicle-down sensor (DFI) coming off
- Immobilizer system trouble
- Starter clutch trouble

Engine won't turn over:
- Valve seizure
- Rocker arm seizure
- Cylinder, piston seizure
- Crankshaft seizure
- Connecting rod small end seizure
- Connecting rod big end seizure
- Transmission gear or bearing seizure
- Camshaft seizure
- Balancer bearing seizure

No fuel flow:
- No fuel in tank
- Fuel pump trouble
- Fuel tank air vent obstructed
- Fuel filter clogged
- Fuel line clogged

No spark; spark weak:
- Vehicle-down sensor (DFI) coming off
- Ignition switch not ON
- Engine stop switch turned OFF
- Clutch lever not pulled in or gear not in neutral
- Battery voltage low
- Spark plug dirty, broken, or gap maladjusted
- Spark plug cap or high tension wiring trouble
- Spark plug cap shorted or not in good contact
- Spark plug incorrect
- Ignition coil shorted or not in good contact
- Ignition coil trouble
- ECU trouble
- Gear position, starter lockout, or side stand switch trouble
- Crankshaft sensor trouble
- Ignition switch or engine stop switch shorted
- Starter system wiring shorted or open
- Main 30 A or ignition fuse blown

Fuel/air mixture incorrect:
- Air cleaner clogged, poorly sealed, or missing
- Leak from oil filler cap, breather hose or air cleaner drain cap.

Compression Low:
- Spark plug loose
- Cylinder head not sufficiently tightened down
- Cylinder, piston worn
- Piston ring bad (worn, weak, broken, or sticking)
- Piston ring/groove clearance excessive
- Cylinder head gasket damaged
- Cylinder head warped
- Valve spring broken or weak
- Valve not seating properly (valve bent, worn, or carbon accumulation on the seating surface)
- KACR sticks open (engine stalls when moving off)
- HLA damaged (worn, seizure, or spring broken)
- HLA oil passage clogged

Poor Running at Low Speed:

Spark weak:
- Battery voltage low
- Ignition coil trouble
- Ignition coil shorted or not in good contact
- Spark plug dirty, broken, or maladjusted
- Spark plug cap or high tension wiring trouble
- Spark plug cap shorted or not in good contact
- Spark plug incorrect
- ECU trouble
- Crankshaft sensor trouble

Fuel/air mixture incorrect:
- Air cleaner clogged, poorly sealed, or missing
- Fuel tank air vent obstructed
- Fuel pump trouble
- Throttle body assy loose
- Air cleaner housing loose

Downloaded from www.vulcanriders-sweden.org

Troubleshooting Guide

Compression low:
- Spark plug loose
- Cylinder head not sufficiently tightened down
- Cylinder, piston worn
- Piston ring bad (worn, weak, broken, or sticking)
- Piston ring/groove clearance excessive
- Cylinder head gasket damaged
- Cylinder head warped
- Valve spring broken or weak
- Valve not seating properly (valve bent, worn, or carbon accumulation on the seating surface)
- Camshaft cam worm
- KACR weights open (engine stalls when moving off)
- HLA seizure

Run-on (dieseling):
- Ignition switch trouble
- Engine stop switch trouble
- Fuel injector trouble
- Loosen terminal of battery (–) cable or ECU ground lead
- Carbon accumulating on valve seating surface
- Engine overheating

Other:
- ECU trouble
- Engine vacuum not synchronizing
- Engine oil viscosity too high
- Drive train trouble
- Brake dragging
- Clutch slipping
- Engine overheating
- Air suction valve trouble
- Air switching valve trouble
- Blowby gas system trouble

Poor Running or No Power at High Speed:

Firing incorrect:
- Spark plug dirty, broken, or maladjusted
- Spark plug cap or high tension wiring trouble
- Spark plug cap shorted or not in good contact
- Spark plug incorrect
- Ignition coil shorted or not in good contact trouble
- Ignition coil trouble
- ECU trouble

Fuel/air mixture incorrect:
- Air cleaner clogged, poorly sealed, or missing
- Air cleaner housing loose
- Water or foreign matter in fuel
- Throttle body assy loose
- Fuel to injector insufficient
- Fuel tank air vent obstructed
- Fuel line clogged
- Fuel pump trouble

Compression low:
- Spark plug loose
- Cylinder head not sufficiently tightened down
- Cylinder, piston worn
- Piston ring bad (worn, weak, broken, or sticking)
- Piston ring/groove clearance excessive
- Cylinder head gasket damaged
- Cylinder head warped
- Valve spring broken or weak
- Valve not seating properly (valve bent, worn, or carbon accumulation on the seating surface.)
- KACR weights open (engine stalls when moving off)
- HLA seizure

Knocking:
- Carbon built up in combustion chamber
- Fuel poor quality or incorrect
- Spark plug incorrect
- ECU trouble

Miscellaneous:
- Throttle valve won't fully open
- Brake dragging
- Clutch slipping
- Engine overheating
- Engine oil level too high
- Engine oil viscosity too high
- Drive train trouble
- Camshaft cam worm
- Air suction valve trouble
- Air switching valve trouble
- Catalytic converter melt down due to muffler overheating (KLEEN)

Overheating:

Firing incorrect:
- Spark plug dirty, broken, or maladjusted
- Spark plug incorrect
- ECU trouble

Muffler overheating:
- For KLEEN, do not run the engine even if with only one cylinder misfiring or poor running (Request the nearest service facility to correct it)
- For KLEEN, do not push-start with a dead battery (Connect another full-charged battery with jumper cables, and start the engine using the electric starter)

Downloaded from www.vulcanriders-sweden.org

For KLEEN, do not start the engine under misfire due to spark plug fouling or poor connection of the stick coil
For KLEEN, do not coast the motorcycle with the ignition switch off (Turn the ignition switch ON and run the engine)
ECU trouble

Fuel/air mixture incorrect:
Throttle body assy loose
Air cleaner housing loose
Air cleaner poorly sealed, or missing
Air cleaner clogged

Compression high:
Carbon built up in combustion chamber
KACR weights close

Engine load faulty:
Clutch slipping
Engine oil level too high
Engine oil viscosity too high
Drive train trouble
Brake dragging

Lubrication inadequate:
Engine oil level too low
Engine oil poor quality or incorrect

Water temperature gauge incorrect:
Water temperature gauge broken
Water temperature sensor broken

Coolant incorrect:
Coolant level too low
Coolant deteriorated
Wrong coolant mixed ratio

Cooling system component incorrect:
Radiator fin damaged
Radiator clogged
Thermostat trouble
Radiator cap trouble
Radiator fan relay trouble
Fan motor broken
Fan blade damaged
Water pump not turning
Water pump impeller damaged

Over Cooling:

Water temperature meter incorrect:
Water temperature meter broken
Water temperature sensor broken

Cooling system component incorrect:
Thermostat trouble

Clutch Operation Faulty:

Clutch slipping:
Friction plate worn or warped
Steel plate worn or warped
Clutch spring broken or weak
Clutch slave cylinder trouble
Clutch hub or housing unevenly worn
Clutch master cylinder trouble

Clutch not disengaging properly:
Clutch plate warped or too rough
Clutch spring compression uneven
Engine oil deteriorated
Engine oil viscosity too high
Engine oil level too high
Clutch housing frozen on drive shaft
Clutch hub nut loose
Clutch hub spline damaged
Clutch friction plate installed wrong
Clutch fluid leakage
Clutch fluid deteriorated
Clutch master cylinder primary or secondary cup damaged
Clutch master cylinder scratched inside
Air in the clutch fluid line

Gear Shifting Faulty:

Doesn't go into gear; shift pedal doesn't return:
Clutch not disengaging
Shift fork bent or seized
Gear stuck on the shaft
Gear positioning lever binding
Shift return spring weak or broken
Shift return spring pin loose
Shift mechanism arm spring broken
Shift mechanism arm broken

Jumps out of gear:
Shift fork ear worn, bent
Gear groove worn
Gear dogs and/or dog holes worn
Shift drum groove worn
Gear positioning lever spring weak or broken
Shift fork guide pin worn
Drive shaft, output shaft, and/or gear splines worn

Overshifts:
Gear positioning lever spring weak or broken
Shift mechanism arm return spring weak or broken

Abnormal Engine Noise:

Knocking:
ECU trouble
Carbon built up in combustion chamber
Fuel poor quality or incorrect
Spark plug incorrect
Overheating

Piston slap:
Cylinder/piston clearance excessive
Cylinder, piston worn
Connecting rod bent
Piston pin, piston pin hole worn

Downloaded from www.vulcanriders-sweden.org

Troubleshooting Guide

Valve noise:
- Engine not sufficiently warmed up after HLA installation
- HLA damaged (worn, seizure, or spring broken)
- HLA aeration due to low oil level
- Air in HLA
- Metal chips or dust jammed in HLA
- Valve spring broken or weak
- Camshaft bearing worn

Other noise:
- Connecting rod small end clearance excessive
- Connecting rod big end clearance excessive
- Piston ring/groove clearance excessive
- Piston ring worn, broken, or stuck
- Piston ring groove worn
- Piston seizure, damage
- Cylinder head gasket leaking
- Exhaust pipe leaking at cylinder head connection
- Crankshaft runout excessive
- Engine mounting portions loose
- Crankshaft bearing worn
- Primary gear worn or chipped
- Camshaft chain tensioner trouble
- Camshaft chain, sprocket, guide worn
- Air suction valve damaged
- Air switching valve damaged
- Alternator rotor loose
- Catalytic converter melt down due to muffler overheating (KLEEN)
- Balancer gear worn or chipped
- Balancer shaft position maladjusted
- Balancer bearing worn
- Balancer shaft coupling rubber damper damaged

Abnormal Drive Train Noise:

Clutch noise:
- Clutch damper weak or damaged
- Clutch housing/friction plate clearance excessive
- Clutch housing gear worn
- Wrong installation of outside friction plate

Transmission noise:
- Bearings worn
- Transmission gear worn or chipped
- Metal chips jammed in gear teeth
- Engine oil insufficient

Drive line noise:
- Drive belt adjusted improperly
- Drive belt worn
- Rear and/or engine pulley worn
- Rear wheel misaligned

Abnormal Frame Noise:

Front fork noise:
- Oil insufficient or too thin
- Spring weak or broken

Rear shock absorber noise:
- Shock absorber damaged

Disc brake noise:
- Pad installed incorrectly
- Pad surface glazed
- Disc warped
- Caliper trouble

Other noise:
- Bracket, nut, bolt, etc. not properly mounted or tightened

Warning Indicator Light (Oil Pressure Warning) Doesn't Go OFF:

- Engine oil pump damaged
- Engine oil screen clogged
- Engine oil filter clogged
- Engine oil level too low
- Engine oil viscosity too low
- Camshaft bearing worn
- Crankshaft bearing worn
- Oil pressure switch damaged
- Wiring faulty
- Relief valve stuck open
- O-ring at the oil passage in the crankcase damaged

Exhaust Smokes Excessively:

White smoke:
- Piston oil ring worn
- Cylinder worn
- Valve oil seal damaged
- Valve guide worn
- Engine oil level too high
- Blowby gas system trouble

Black smoke:
- Air cleaner clogged

Brown smoke:
- Air cleaner housing holder loose
- Air cleaner poorly sealed or missing

Handling and/or Stability Unsatisfactory:

Handlebar hard to turn:
- Cable routing incorrect
- Hose routing incorrect
- Wiring routing incorrect
- Steering stem nut too tight
- Steering stem bearing damaged
- Steering stem bearing lubrication inadequate
- Steering stem bent
- Tire air pressure too low

Downloaded from www.vulcanriders-sweden.org

Troubleshooting Guide

Handlebar shakes or excessively vibrates:
Tire worn
Swingarm pivot bearing worn
Rim warped, or not balanced
Wheel bearing worn
Handlebar holder bolt loose
Steering stem nut loose
Front, rear axle runout excessive
Engine mounting portions loose

Handlebar pulls to one side:
Frame bent
Wheel misalignment
Swingarm bent or twisted
Swingarm pivot shaft runout excessive
Steering maladjusted
Front fork bent
Right and left front fork oil level uneven

Shock absorption unsatisfactory:
(Too hard)
Front fork oil excessive
Front fork oil viscosity too high
Rear shock absorber adjustment too hard
Tire air pressure too high
Front fork bent
(Too soft)
Tire air pressure too low
Front fork oil insufficient and/or leaking
Front fork oil viscosity too low
Rear shock adjustment too soft
Front fork, rear shock absorber spring weak
Rear shock absorber oil leaking

Brake Doesn't Hold:

Air in the brake line
Pad or disc worn
Brake fluid leakage
Disc warped
Contaminated pad
Brake fluid deteriorated
Primary or secondary cup damaged in master cylinder
Master cylinder scratched inside

Battery Trouble:

Battery discharged:
Charge insufficient
Battery faulty (too low terminal voltage)
Battery cable making poor contact
Load excessive (e.g., bulb of excessive wattage)
Ignition switch trouble
Alternator trouble
Wiring faulty
Regulator/rectifier trouble

Battery overcharged:
Alternator trouble
Regulator/rectifier trouble
Battery faulty

Downloaded from www.vulcanriders-sweden.org

Downloaded from www.vulcanriders-sweden.org

MODEL APPLICATION

Year	Model	Beginning Frame No.
2009	VN1700C9F	JKBVNRC1□9A000001 or JKBVNT70CCA000001

□:This digit in the frame number changes from one machine to another.

KAWASAKI HEAVY INDUSTRIES, LTD.
Consumer Products & Machinery Company

Part No.99924-1414-01

Printed in Japan

Downloaded from www.vulcanriders-sweden.org