Kawasaki

VULCAN 1500 CLASSIC Fi

VN1500 CLASSIC Fi



Motorcycle Service Manual

Downloaded from www.vulcanriders-sweden.org

Downloaded from www.vulcanriders-sweden.org

Quick Reference Guide

General Information	1
Fuel System (DFI)	2
Cooling System	3
Engine Top End	4
Clutch	5
Engine Lubrication System	6
Engine Removal/Installation	7
Crankshaft/Transmission	8
Wheels/Tires	9
Final Drive	10
Brakes	11
Suspension	12
Steering	13
Frame	14
Electrical System	15
Appendix	16

This quick reference guide will assist you in locating a desired topic or procedure.

- Bend the pages back to match the black tab of the desired chapter number with the black tab on the edge at each table of contents page.
- Refer to the sectional table of contents for the exact pages to locate the specific topic required.

Downloaded from www.vulcanriders-sweden.org

LIST OF ABBREVIATIONS

A	ampere(s)	lb	pound(s)
ABDC	after bottom dead center	m	meter(s)
AC	alternating current	min	minute(s)
ATDC	after top dead center	N	newton(s)
BBDC	before bottom dead center	Pa	pascal(s)
BDC	bottom dead center	PS	horsepower
BTDC	before top dead center	psi	pound(s) per square inch
°C	degree(s) Celsius	r	revolution
DC	direct current	r/min, rpm	revolution(s) per minute
F	farad(s)	TDC	top dead center
°F	degree(s) Fahrenheit	TIR	total indicator reading
ft	foot, feet	V	volt(s)
g	gram(s)	W	watt(s)
h	hour(s)	Ω	ohm(s)
L	liter(s)		

Read OWNER'S MANUAL before operating.

Downloaded from www.vulcanriders-sweden.org

EMISSION CONTROL INFORMATION

To protect the environment in which we all live, Kawasaki has incorporated crankcase emission (1) and exhaust emission (2) control systems in compliance with applicable regulations of the United States Environmental Protection Agency and California Air Resources Board. Additionally, Kawasaki has incorporated an evaporative emission control system (3) in compliance with applicable regulations of the California Air Resources Board on vehicles sold in California only.

1. Crankcase Emission Control System

This system eliminates the release of crankcase vapors into the atmosphere. Instead, the vapors are routed through an oil separator to the inlet side of the engine. While the engine is operating, the vapors are drawn into combustion chamber, where they are burned along with the fuel and air supplied by the fuel injection system.

2. Exhaust Emission Control System

This system reduces the amount of pollutants discharged into the atmosphere by the exhaust of this motorcycle. The fuel, ignition, and exhaust systems of this motorcycle have been carefully designed and constructed to ensure an efficient engine with low exhaust pollutant levels.

The exhaust system of this model motorcycle manufactured primarily for sale in California includes a catalytic converter system.

3. Evaporative Emission Control System

Vapors caused by fuel evaporation in the fuel system are not vented into the atmosphere. Instead, fuel vapors are routed into the running engine to be burned, or stored in a canister when the engine is stopped. Liquid fuel is caught by a vapor separator and returned to the fuel tank.

The Clean Air Act, which is the Federal law covering motor vehicle pollution, contains what is commonly referred to as the Act's "tampering provisions."

"Sec. 203(a) The following acts and the causing thereof are prohibited...

(3)(A) for any person to remove or render inoperative any device or element of design installed on or in a motor vehicle or motor vehicle engine in compliance with regulations under this title prior to its sale and delivery to the ultimate purchaser, or for any manufacturer or dealer knowingly to remove or render inoperative any such device or element of design after such sale and delivery to the ultimate purchaser.

(3)(B) for any person engaged in the business of repairing, servicing, selling, leasing, or trading motor vehicles or motor vehicle engines, or who operates a fleet of motor vehicles knowingly to remove or render inoperative any device or element of design installed on or in a motor vehicle or motor vehicle engine in compliance with regulations under this title following its sale and delivery to the ultimate purchaser..."

NOTE

○ *The phrase "remove or render inoperative any device or element of design" has been generally interpreted as follows:*

1. *Tampering does not include the temporary removal or rendering inoperative of devices or elements of design in order to perform maintenance.*
2. *Tampering could include:*
   - *a. Maladjustment of vehicle components such that the emission standards are exceeded.*
   - *b. Use of replacement parts or accessories which adversely affect the performance or durability of the motorcycle.*
   - *c. Addition of components or accessories that result in the vehicle exceeding the standards.*
   - *d. Permanently removing, disconnecting, or rendering inoperative any component or element of design of the emission control systems.*

WE RECOMMEND THAT ALL DEALERS OBSERVE THESE PROVISIONS OF FEDERAL LAW, THE VIOLATION OF WHICH IS PUNISHABLE BY CIVIL PENALTIES NOT EXCEEDING $10 000 PER VIOLATION.

Downloaded from www.vulcanriders-sweden.org

TAMPERING WITH NOISE CONTROL SYSTEM PROHIBITED

Federal law prohibits the following acts or the causing thereof: (1) The removal or rendering inoperative by any person other than for purposes of maintenance, repair, or replacement, of any device or element of design incorporated into any new vehicle for the purpose of noise control prior to its sale or delivery to the ultimate purchaser or while it is in use, or (2) the use of the vehicle after such device or element of design has been removed or rendered inoperative by any person.

Among those acts presumed to constitute tampering are the acts listed below:

- Replacement of the original exhaust system or muffler with a component not in compliance with Federal regulations.
- Removal of the muffler(s) or any internal portion of the muffler(s).
- Removal of the air box or air box cover.
- Modifications to the muffler(s) or air inlet system by cutting, drilling, or other means if such modifications result in increased noise levels.

Downloaded from www.vulcanriders-sweden.org

Foreword

This manual is designed primarily for use by trained mechanics in a properly equipped shop. However, it contains enough detail and basic information to make it useful to the owner who desires to perform his own basic maintenance and repair work. A basic knowledge of mechanics, the proper use of tools, and workshop procedures must be understood in order to carry out maintenance and repair satisfactorily. Whenever the owner has insufficient experience or doubts his ability to do the work, all adjustments, maintenance, and repair should be carried out only by qualified mechanics.

In order to perform the work efficiently and to avoid costly mistakes, read the text, thoroughly familiarize yourself with the procedures before starting work, and then do the work carefully in a clean area. Whenever special tools or equipment are specified, do not use makeshift tools or equipment. Precision measurements can only be made if the proper instruments are used, and the use of substitute tools may adversely affect safe operation.

For the duration of the warranty period, we recommend that all repairs and scheduled maintenance be performed in accordance with this service manual. Any owner maintenance or repair procedure not performed in accordance with this manual may void the warranty.

To get the longest life out of your vehicle:

- Follow the Periodic Maintenance Chart in the Service Manual.
- Be alert for problems and non-scheduled maintenance.
- Use proper tools and genuine Kawasaki Motorcycle parts. Special tools, gauges, and testers that are necessary when servicing Kawasaki motorcycles are introduced by the Service Manual. Genuine parts provided as spare parts are listed in the Parts Catalog.
- Follow the procedures in this manual carefully. Don't take shortcuts.
- Remember to keep complete records of maintenance and repair with dates and any new parts installed.

How to Use This Manual

In this manual, the product is divided into its major systems and these systems make up the manual's chapters.

The Quick Reference Guide shows you all of the product's system and assists in locating their chapters. Each chapter in turn has its own comprehensive Table of Contents.

For example, if you want ignition coil information, use the Quick Reference Guide to locate the Electrical System chapter. Then, use the Table of Contents on the first page of the chapter to find the ignition coil section.

Whenever you see these WARNING and CAUTION symbols, heed their instructions! Always follow safe operating and maintenance practices.

⚠ WARNING

This warning symbol identifies special instructions or procedures which, if not correctly followed, could result in personal injury, or loss of life.

CAUTION

This caution symbol identifies special instructions or procedures which, if not strictly observed, could result in damage to or destruction of equipment.

This manual contains four more symbols (in addition to WARNING and CAUTION) which will help you distinguish different types of information.

NOTE

○ *This note symbol indicates points of particular interest for more efficient and convenient operation.*

- Indicates a procedural step or work to be done.

○ Indicates a procedural sub-step or how to do the work of the procedural step it follows. It also precedes the text of a NOTE.

★ Indicates a conditional step or what action to take based on the results of the test or inspection in the procedural step or sub-step it follows.

In most chapters an exploded view illustration of the system components follows the Table of Contents. In these illustrations you will find the instructions indicating which parts require specified tightening torque, oil, grease or a locking agent during assembly.

Downloaded from www.vulcanriders-sweden.org

Downloaded from www.vulcanriders-sweden.org

General Information

Table of Contents

Before Servicing 1-2
Model Identification 1-5
General Specifications 1-8
Periodic Maintenance Chart 1-11
Torque and Locking Agent 1-13
Special Tools and Sealants 1-20
Cable, Wire, and Hose Routing 1-27

Downloaded from www.vulcanriders-sweden.org

1-2 GENERAL INFORMATION

Before Servicing

Before starting to service a motorcycle, careful reading of the applicable section is recommended to eliminate unnecessary work. Photographs, diagrams, notes, cautions, warnings, and detailed descriptions have been included wherever necessary. Nevertheless, even a detailed account has limitations, a certain amount of basic knowledge is also required for successful work.

Especially note the following

(1) Dirt

Before removal and disassembly, clean the motorcycle. Any dirt entering the engine or other parts will work as an abrasive and shorten the life of the motorcycle. For the same reason, before installing a new part, clean off any dust or metal filings.

(2) Battery Cables

Remove the ground (−) cable from the battery before performing any disassembly operations on the motorcycle. When installing, connect the positive (+) cable first, then the negative (−) cable to the battery. This prevents: (a) the possibility of accidentally turning the engine over while partially disassembled. (b) sparks at electrical connections which will occur when they are disconnected. (c) damage to electrical parts.

(3) Installation, Assembly

Generally, installation or assembly is the reverse of removal or disassembly. But if this Service Manual has installation or assembly procedures, follow them. Note parts locations and cable, wire, and hose routing during removal or disassembly so they can be installed or assembled in the same way. It is preferable to mark and record the locations and routing as much as possible.

(4) Tightening Sequence

Generally, when installing a part with several bolts, nuts, or screws, start them all in their holes and tighten them to a snug fit. Then tighten them evenly in a cross pattern. This is to avoid distortion of the part and/or causing gas or oil leakage. Conversely when loosening the bolts, nuts, or screws, first loosen all of them by about a quarter turn and then remove them. Where there is a tightening sequence indication in this Service Manual, the bolts, nuts, or screws must be tightened in the order and method indicated.

(5) Torque

When torque values are given in this Service Manual, use them. Either too little or too much torque may lead to serious damage. Use a good quality, reliable torque wrench.

(6) Force

Common sense should dictate how much force is necessary in assembly and disassembly. If a part seems especially difficult to remove or install, stop and examine what may be causing the problem. Whenever tapping is necessary, tap lightly using a wooden or plastic-faced mallet. Use an impact driver for screws (particularly for the removal of screws held by a locking agent) in order to avoid damaging the screw heads.

(7) Edges

Watch for sharp edges, especially during major engine disassembly and assembly. Protect your hands with gloves or a piece of thick cloth when lifting the engine or turning it over.

(8) High-Flash Point Solvent

A high-flash point solvent is recommended to reduce fire danger. A commercial solvent commonly available in North America is Standard solvent (generic name). Always follow manufacturer and container directions regarding the use of any solvent.

(9) Gasket, O-ring

Do not reuse a gasket or O-ring once it has been in service. The mating surfaces around the gasket should be free of foreign matter and perfectly smooth to avoid oil or compression leakage.

(10) Liquid Gasket, Non-Permanent Locking Agent

Follow manufacturer's directions for cleaning and preparing surfaces where these compounds will be used. Apply sparingly. Excessive amounts may block engine oil passages and cause serious damage. An example of a non-permanent locking agent commonly available in North America is Loctite Lock'n Seal (Blue).

(11) Press

A part installed using a press or driver, such as a wheel bearing, should first be coated with oil on its outer or inner circumference so that it will go into place smoothly.

Downloaded from www.vulcanriders-sweden.org

Before Servicing

(12)Ball Bearing and Needle Bearing

Do not remove a ball bearing or a needle bearing unless it is absolutely necessary. Replace any ball or needle bearings that were removed with new ones, as removal generally damages bearings. Install bearings with the marked side facing out applying pressure evenly with a suitable driver. Only press on the race that forms the press fit with the base component to avoid damaging the bearings. This prevents severe stress on the balls or needles and races, and prevent races and balls or needles from being dented. Press a ball bearing until it stops at the stopper in the hole or on the shaft.

(13)Oil Seal and Grease Seal

Replace any oil or grease seals that were removed with new ones, as removal generally damages seals. When pressing in a seal which has manufacturer's marks, press it in with the marks facing out. Seals should be pressed into place using a suitable driver, which contacts evenly with the side of seal, until the face of the seal is even with the end of the hole. Before a shaft passes through a seal, apply a little high temperature grease on the lips to reduce rubber to metal friction.

(14)Circlip, Retaining Ring, and Cotter Pin

Replace any circlips and retaining rings, and cotter pins that were removed with new ones, as removal weakens and deforms them. When installing circlips and retaining rings, take care to compress or expand them only enough to install them and no more.

(15)Lubrication

Engine wear is generally at its maximum while the engine is warming up and before all the rubbing surfaces have an adequate lubricative film. During assembly, oil or grease (whichever is more suitable) should be applied to any rubbing surface which has lost its lubricative film. Old grease and dirty oil should be cleaned off. Deteriorated grease has lost its lubricative quality and may contain abrasive foreign particles.

Don't use just any oil or grease. Some oils and greases in particular should be used only in certain applications and may be harmful if used in an application for which they are not intended. This manual makes reference to molybdenum disulfide grease (MoS_2) and molybdenum disulfide oil in the assembly of certain engine and chassis parts. The molybdenum disulfide oil is a mixture of engine oil and molybdenum disulfide grease with a weight ratio (10 : 1), which can be made in your work shop. Always check manufacturer recommendations before using such special lubricants.

(16)Electrical Leads

All the electrical leads are either single-color or two-color and, with only a few exceptions, must be connected to leads of the same color. On any of the two-color leads there is a greater amount of one color and a lesser amount of a second color, so a two-color lead is identified by first the primary color and then the secondary color. For example, a yellow lead with thin red stripes is referred to as a "yellow/red" lead; it would be a "red/yellow" lead if the colors were reversed to make red the main color.

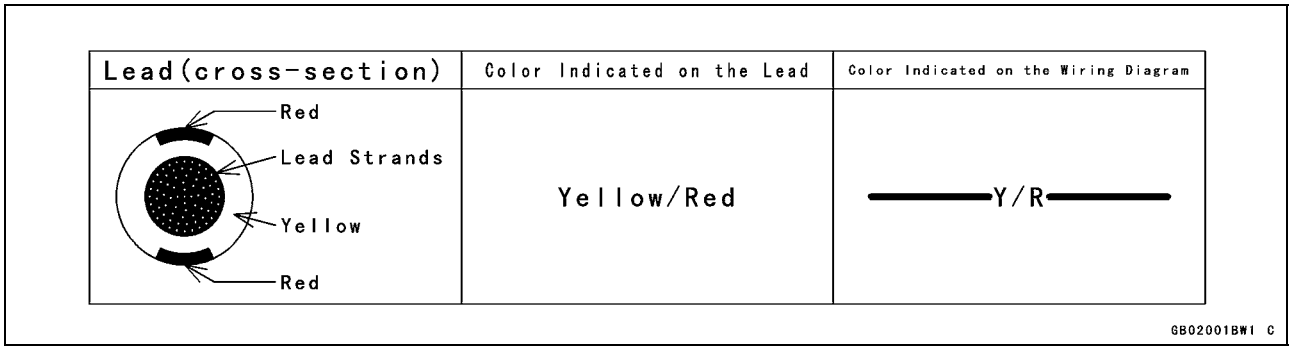

(17)Replacement Parts

When there is a replacement instruction, replace these parts with new ones every time they are removed. These replacement parts will be damaged or lose their original function once removed.

Downloaded from www.vulcanriders-sweden.org

Before Servicing

(18)Inspection

When parts have been disassembled, visually inspect these parts for the following conditions or other damage. If there is any doubt as to the condition of them, replace them with new ones.

Abrasion	Crack	Hardening	Warp
Bent	Dent	Scratch	Wear
Color change	Deterioration	Seizure	

(19)Specifications

Specification terms are defined as follows:

“Standards” show dimensions or performances which brand-new parts or systems have.

“Service Limits” indicate the usable limits. If the measurement shows excessive wear or deteriorated performance, replace the damaged parts.

Downloaded from www.vulcanriders-sweden.org

Model Identification

VN1500-N1 (US, and Canada) Left Side View



VN1500-N1 (US, and Canada) Right Side View



Downloaded from www.vulcanriders-sweden.org

Model Identification

VN1500-N1 (Europe) Left Side View



VN1500-N1 (Europe) Right Side View



Downloaded from www.vulcanriders-sweden.org

Model Identification

VN1500-T1 (US, and Canada) Left Side View



VN1500-T1 (US, and Canada) Right Side View



Downloaded from www.vulcanriders-sweden.org

General Specifications

Items	VN1500-N1 ~ N2	VN1500-N3 ~ N4, N6F/T6F	VN1500N7F ~
Dimensions			
Overall Length	2 505 mm (98.6 in.)		
Overall Width	995 mm (39.2 in.)		
Overall Height	1 140 mm (44.9 in.)		
Wheelbase	1 665 mm (65.6 in.)		
Road Clearance	125 mm (4.9 in.)		
Seat Height	700 mm (27.6 in.)		
Dry Mass	299 kg (659 lb), (CAL) 299.5 kg (660 lb)		
Curb Mass:			
Front	144 kg (318 lb)		
Rear	181 kg (399 lb), (CAL) 181.5 kg (400 lb)		
Fuel Tank Capacity	19 L (5.02 US gal)		
Fuel	Unleaded and high-octane gasoline (see Owner's Manual)		
Performance			
Minimum Turning Radius	3.0 m (9.8 ft)		
Engine			
Type	4-stroke, SOHC, V2-cylinder		
Cooling System	Liquid-cooled		
Bore and Stroke	102 × 90 mm (4.02 × 3.54 in.)		
Displacement	1 470 cm³ (89.7 cu in.)		
Compression Ratio	9.0 : 1		
Maximum Horsepower	48 kW (65 PS) @4 700 r/min (rpm)		
	(CA) (US) –		
Maximum Torque	114 N·m (11.6 kgf·m, 83.9 ft·lb) @2 800 r/min (rpm)		
	(CA) (US) –		
Carburetion System	DFI (Digital Fuel Injection) System		
Starting System	Electric starter		
Ignition System	Battery and coil (transistorized)		
Timing Advance	Electronically advanced (digital)		
Ignition Timing	From 5° BTDC @950 r/min (rpm) ~ 25° BTDC @4 500 r/min (rpm)		
Spark Plugs	NGK DPR6EA-9 or ND X20EPR-U9		
Cylinder Numbering Method	Front to Rear, 1-2		
Firing Order	1-2		
Valve Timing:			
Inlet:			
Open	22° BTDC		
Close	66° ABDC		
Duration	268°		
Exhaust:			
Open	66° BBDC		
Close	26° ATDC		
Duration	272°		

Downloaded from www.vulcanriders-sweden.org

General Specifications

Items	VN1500-N1 ~ N2	VN1500-N3 ~ N4, N6F/T6F	VN1500N7F ~
Lubrication System	Forced lubrication (wet sump)		
Engine Oil:			
Grade	API SE, SF or SG		API SE, SF or SG
	API SH or SJ with JASO MA		API SH, SJ or SL with JASO MA
Viscosity	SAE10W-40, 10W-50, 20W-40, or 20W-50	SAE10W-40	
Capacity	3.5 L (3.70 US) (when engine is completely disassembled and dry)		
Drive Train			
Primary Reduction System:			
Type	Gear		
Reduction Ratio	1.517 (85/56)		
Clutch Type	Wet multi disc		
Transmission:			
Type	5-speed, constant mesh, return shift		
Gear Ratios:			
1st	2.500 (40/16)		
2nd	1.590 (35/22)		
3rd	1.192 (31/26)		
4th	0.965 (28/29)		
5th	0.781 (25/32)		
Final Drive System:			
Type	Shaft		
Reduction Ratio	2.619 (15/21 × 33/9)		
Overall Drive Ratio	3.105 @Top gear		
Final Gear Case Oil:			
Grade	API: GL-5 Hypoid gear oil		
Viscosity	SAE90 (above 5°C), SAE80 (below 5°C)		
Capacity	200 mL (6.8 US oz)		
Frame			
Type	Tubular, double cradle		
Caster (Rake Angel)	32°		
Trail	165 mm (6.50 in.)		
Front Tire:			
Type	Tube-type		
Size	130/90-16 M/C 67H		
Rear Tire:			
Type	Tube-type		
Size	150/80B16 M/C 71H		
Rim Size:			
Front	16 × 3.00		
Rear	16 × 3.50		

Downloaded from www.vulcanriders-sweden.org

General Specifications

Items	VN1500-N1 ~ N2	VN1500-N3 ~ N4, N6F/T6F	VN1500N7F ~
Front Suspension:			
Type	Telescopic fork		
Wheel Travel	150 mm (5.90 in.)		
Rear Suspension:			
Type	Swingarm		
Wheel Travel	95 mm (3.74 in.)		
Brake Type:			
Front	Single disc		
Rear	Single disc		
Electrical Equipment			
Battery	12 V 18 Ah		
Headlight:			
Type	Semi-sealed beam		
Bulb	12 V 60/55 W (quartz-halogen)		
Tail/Brake Light	12 V 5/21 W × 2		
Alternator:			
Type	Three-phase AC, twin rotor		
Rated Output	42 A × 14 V @6 000 r/min (rpm)		

Specifications are subject to change without notice, and may not apply to every country.
CAL: California Model
CA: Canada Model
US: United States Model

Downloaded from www.vulcanriders-sweden.org

Periodic Maintenance Chart

The scheduled maintenance must be done in accordance with this chart to keep the motorcycle in good running condition. **The initial maintenance is vitally important and must not be neglected.**

FREQUENCY / INSPECTION	Whichever comes first ➡ / ⬇ Every	* ODOMETER READING × 1 000 km (× 1 000 mile) 1 (0.6)	6 (4)	12 (7.5)	18 (12)	24 (15)	30 (20)	36 (24)
Fuel hoses, connections-inspect †			●	●	●	●	●	●
Clutch hoses, connections-inspect †			●	●	●	●	●	●
Brake hoses, connections-inspect †			●	●	●	●	●	●
Throttle grip play inspect †		●	●	●	●	●	●	●
Idle speed-adjust		●		●		●		●
Air cleaner element-clean† #				●		●		●
Evaporative emission control system (CAL)-inspect †		●	●	●	●	●	●	●
Coolant-change	2 years					●		
Water hoses, connections-inspect †		●						
Air suction valve-inspect †			●	●	●	●	●	●
Clutch fluid level-inspect †	month	●	●	●	●	●	●	●
Clutch fluid-change	2 years					●		
Clutch master cylinder cup and dust cover-replace	4 years							
Clutch slave cylinder fluid seal-replace	4 years							
Engine oil-change #	6 months	●	●	●	●	●	●	●
Oil filter-replace		●		●		●		●
Spoke tightness and rim runout-inspect †		●	●	●	●	●	●	●
Tire wear-inspect †			●	●	●	●	●	●
Final gear case oil level-inspect †				●		●		●
Final gear case oil-change		●						●
Propeller shaft joint-lubricate				●				●
Caliper fluid seal and dust seal-replace	4 years							
Brake pad wear-inspect †#			●	●	●	●	●	●
Brake master cylinder cup and dust cover-replace	4 years							
Brake fluid level-inspect †	month	●	●	●	●	●	●	●
Brake fluid-change	2 years					●		
Front fork oil-change	2 years					●		
Front fork oil leak-inspect †				●		●		●
Rear shock absorber-inspect †				●		●		●
Swingarm pivot-lubricate				●				●
Steering-inspect †		●	●	●	●	●	●	●
Steering stem bearing-lubricate	2 years					●		
Spark plug-clean and gap †			●	●	●	●	●	●
Brake light switch-inspect †		●	●	●	●	●	●	●

Downloaded from www.vulcanriders-sweden.org

Periodic Maintenance Chart

FREQUENCY / INSPECTION	Whichever comes first ➡ / ⬇ Every	* ODOMETER READING × 1 000 km (× 1 000 mile) 1 (0.6)	6 (4)	12 (7.5)	18 (12)	24 (15)	30 (20)	36 (24)
General lubrication-perform				●		●		●
Nut, bolt, and fastener tightness-inspect †		●		●		●		●

#: Service more frequently when operating in severe conditions; dusty, wet, muddy, high speed, or frequent starting/stopping.

*: For higher odometer readings, repeat at the frequency interval established here.

†: Replace, add, adjust, clean, or torque if necessary.

Throttle grip play-inspect: Check the throttle grip play and the throttle body bores.

CAL: California Model only

Downloaded from www.vulcanriders-sweden.org

Torque and Locking Agent

The following tables list the tightening torque for the major fasteners requiring use of a non-permanent locking agent or liquid gasket.

Letters used in the “Remarks” column mean:
EO: Apply engine oil to the threads and the seating surface.
G: Apply grease to the threads.
L: Apply a non-permanent locking agent to the threads.
Lh: Left-hand threads
MO: Apply molybdenum disulfide oil to the threads and the seating surface.
S: Tighten the fasteners following the specified sequence.
SS: Apply silicone sealant.
St: Stake the fasteners to prevent loosening.
R: Replacement parts

○The molybdenum disulfide oil is a mixture of engine oil and molybdenum disulfide grease with a weight ratio (10 : 1).

Fastener	Torque			Remarks
	N·m	kgf·m	ft·lb	
Fuel System				
Vacuum Sensor Nut	9.8	1.0	87 in·lb	
Atmospheric Pressure Sensor Nut	9.8	1.0	87 in·lb	
High Pressure Fuel Hose Clamp Screws	1.5	0.15	13 in·lb	
Pressure Regulator Screws	4.9	0.50	43 in·lb	
Delivery Joint Screws	3.4	0.35	30 in·lb	Throttle Body
Throttle Cable Holder Screw	3.4	0.35	30 in·lb	L
Throttle Body Flange Bolts	4.9	0.50	43 in·lb	
Throttle Assy Holder Bolts	12	1.2	104 in·lb	Right Side
Inlet Manifold Bolts	12	1.2	104 in·lb	on Cyl. Head
Full Throttle Stopper Screw	–	–	–	L, Lh
Spark Plug Lead Holder Bolts	9.8	1.0	87 in·lb	Right Side
Air Cleaner Duct Holder Bolts	9.8	1.0	87 in·lb	Left Side
Right and Left Air Cleaner Base Bolts	12	1.2	104 in·lb	
Right and Left Air Cleaner Base Screws	2.2	0.22	19 in·lb	L, Lower Duct
Left Air Cleaner Duct Tapping Screws	2.2	0.22	19 in·lb	
Left Air Cleaner Cover Allen Bolt ϕ8	16	1.6	12	
Right Air Cleaner Cover Allen Bolt ϕ8	16	1.6	12	
Right Air Cleaner Allen Bolts	11	1.1	95 in·lb	Throttle Body
Choke Cable Plate Screw	2.9	0.30	26 in·lb	L, Throttle Body
Inlet Air Temperature Sensor Nut (DFI)	7.8	0.80	69 in·lb	
Water Temperature Sensor (DFI)	18	1.8	13	SS
Fuel Pump Bolts	6.9	0.70	61 in·lb	S, L
Return Fuel Check Valve	20	2.0	14	
Cooling System				
Water Hose Clamp Screws	2.5	0.25	22 in·lb	
Thermostat Air Bleeder Bolt	7.8	0.80	69 in·lb	
Radiator Fan Switch	18	1.8	13	
Water Temperature Switch	7.4	0.75	65 in·lb	SS
Water Pump Impeller Bolt	9.8	1.0	87 in·lb	Lh

Downloaded from www.vulcanriders-sweden.org

Torque and Locking Agent

Fastener	Torque			Remarks
	N·m	kgf·m	ft·lb	
Water Pump Cover Bolts	9.8	1.0	87 in·lb	
Water Pump Drain Bolt	9.8	1.0	87 in·lb	
Water Pump Air Bleeder Bolt	9.8	1.0	87 in·lb	
Water Pipe Bolts	9.8	1.0	87 in·lb	
Radiator Drain Bolt	7.4	0.75	65 in·lb	
Engine Top End				
Spark Plugs	18	1.8	13	
Spark Plug Retainer	12	1.2	104 in·lb	
Air Suction Valve Cover Bolts	7.4	0.75	65 in·lb	
Chain Tensioner Mounting Bolts	9.8	1.0	87 in·lb	S
Chain Tensioner Cap	20	2.0	14	S
Chain Tensioner Lockbolt	4.9	0.50	43 in·lb	S
Timing Inspection Plug	1.5	0.15	13 in·lb	
Rotor Bolt Plug	1.5	0.15	13 in·lb	
Camshaft Sprocket Bolts	15	1.5	11	L
Oil Hose Flange Bolts	9.8	1.0	87 in·lb	
Rocker Shafts	25	2.5	18	
Rocker Case Nuts:				
12 mm	78	8.0	58	MO, S
8 mm	25	2.5	18	S
Rocker Case Bolts:				
6 mm	8.8	0.90	78 in·lb	S
Cylinder Head Nuts	25	2.5	18	S
Cylinder Head Jacket Plugs	20	2.0	14	L
Rocker Case Cover Bolts	8.8	0.90	78 in·lb	S
Camshaft Chain Guide Bolts	9.8	1.0	87 in·lb	L
Cylinder Nuts	25	2.5	18	S
Exhaust Pipe Cover Clamp Bolts	6.9	0.70	61 in·lb	
Clutch				
Clutch Lever Pivot Bolt	1.0	0.10	8.7 in·lb	
Clutch Lever Pivot Bolt Locknut	5.9	0.60	52 in·lb	
Clutch Reservoir Cap Screws	1.5	0.15	13 in·lb	
Clutch Slave Cylinder Bleed Valve	7.8	0.80	69 in·lb	
Clutch Slave Cylinder Bolts	6.9	0.70	61 in·lb	L
Clutch Hose Banjo Bolts	25	2.5	18	
Clutch Master Cylinder Clamp Bolts	9.8	1.0	87 in·lb	S
Starter Lockout Switch Screws	1.2	0.12	10 in·lb	
Clutch Push Rod Guide Bolts	9.8	1.0	87 in·lb	L
Clutch Cover Bolts	9.8	1.0	87 in·lb	
Clutch Cover Damper Bolts (outside)	9.8	1.0	87 in·lb	L
Clutch Cover Damper Bolts (inside)	9.8	1.0	87 in·lb	EO (tip)
Clutch Cover Damper Screws	4.9	0.50	43 in·lb	L
Clutch Hub Nut	147	15.0	108	MO

Downloaded from www.vulcanriders-sweden.org

Torque and Locking Agent

Fastener	Torque			Remarks
	N·m	kgf·m	ft·lb	
Engine Lubrication System				
Oil Filler Cap	1.5	0.15	13 in·lb	
Oil Screen Plug	20	2.0	15	
Engine Oil Drain Bolt	20	2.0	15	
Oil Filter (Cartridge type)	18	1.8	13	R, EO
Oil Filter Bolt	25	2.5	18	SS
Oil Pressure Relief Valve	15	1.5	11	L
Oil Pressure Switch Terminal Bolt	1.5	0.15	13 in·lb	
Oil Pressure Switch	15	1.5	11	SS
Oil Pump Mounting Bolts	9.8	1.0	87 in·lb	
Oil Hose Banjo Bolts	9.8	1.0	87 in·lb	
Oil Hose Flange Bolt (outside)	9.8	1.0	87 in·lb	
Oil Pipe Holder Bolts (inside)	8.8	0.90	78 in·lb	L
Oil Pipe Clamp Bolts (inside)	9.8	1.0	87 in·lb	L
Right & Left Crankcase Oil Nozzles	3.4	0.35	30 in·lb	× 3
Right Crankcase Oil Nozzle	3.4	0.35	30 in·lb	× 1, Lh
Oil Reserve Tank Bolt (VN1500-N1 ~ N2)	8.8	0.90	78 in·lb	L
Crankcase Breather Hoses Clamp Screw	1.5	0.15	13 in·lb	
Engine Removal/Installation				
Downtube Bolts	44	4.5	32	
Engine Mounting Bolts and Nuts	44	4.5	32	
Engine Mounting Bracket Bolts	25	2.5	18	
Engine Ground Terminal Bolt	7.8	0.80	69 in·lb	
Crankshaft/Transmission				
Crankcase Bolts:				
10 mm	39	4.0	29	S
8 mm	21	2.1	15	S
6 mm	9.8	1.0	87 in·lb	S
Jumper Cable Ground Bracket Bolt	9.8	1.0	87 in·lb	Left Crankcase
Crankcase Bearing Retainer Bolts	9.8	1.0	87 in·lb	L
Camshaft Chain Guide Bolts	9.8	1.0	87 in·lb	L
Right, Left Crankcase Oil Nozzles	3.4	0.35	30 in·lb	× 3
Left Crankcase Oil Nozzles	3.4	0.35	30 in·lb	× 1, Lh
Connecting Rod Big End Nuts	59	6.0	43	MO
Oil Pressure Relief Valve	15	1.5	11	L
Oil Hose Banjo Bolts	9.8	1.0	87 in·lb	
Primary Gear Bolt	147	15.0	108	MO
Water Pump Chain Guide Spring Hook Bolt	2.9	0.30	26 in·lb	
Water Pump Chain Guide Bolt	7.8	0.80	69 in·lb	
Idle Shaft Holder Bolts	7.8	0.80	69 in·lb	
Oil Pressure Switch Terminal Bolt	1.5	0.15	13 in·lb	
Oil Pressure Switch	15	1.5	11	SS
Oil Pipe Clamp Bolts (inside)	9.8	1.0	87 in·lb	L

Downloaded from www.vulcanriders-sweden.org

Torque and Locking Agent

Fastener	Torque			Remarks
	N·m	kgf·m	ft·lb	
Left Balancer Gear Bolt	85	8.7	63	MO
Starter Clutch Bolt	85	8.7	63	MO
Starter Clutch Coupling Bolts	15	1.5	11	L
Gear Set Lever Bolt	9.8	1.0	87 in·lb	
Shift Shaft Return Spring Pin (Bolt)	20	2.0	14	L
Shift Shaft Return Spring Pin (Bolt) (Bolt with punch mark)	39	4.0	29	L
Front Shift Pedal Clamp Bolt	17	1.7	12	mark 10
Rear Shift Pedal Clamp Bolt	17	1.7	12	mark 10
Rear Shift Lever Clamp Bolt	9.8	1.0	87 in·lb	
Shift Rod Locknuts	9.8	1.0	87 in·lb	(Rear: Lh)
Shift Drum Bearing Holder Bolts	9.8	1.0	87 in·lb	L
Shift Drum Cam Screw	–	–	–	L
Damper Cam Nut (Front Gear)	196	20.0	145	MO (threads)
Clutch Push Rod Guide Bolts	9.8	1.0	87 in·lb	L
Water Pump Drainge Bolt	9.8	1.0	87 in·lb	
Wheels/Tires				
Front Axle Clamp Bolt	34	3.5	25	S
Front Axle Nut	108	11.0	80	S
Rear Axle Nut	108	11.0	80	
Rear Tire Air Valve Stem Nuts	1.5	0.15	13 in·lb	
Spoke Nipples	2.9 ~ 7.4	0.30 ~ 0.75	26 ~ 65 in·lb	
Final Drive				
Oil Pipe Banjo Bolts (Front Gear)	12	1.2	104 in·lb	
Oil Nozzle (Front Gear)	2.9	0.30	26 in·lb	
Oil Nozzle (Front Gear)	18	1.8	13	
Neutral Switch	15	1.5	11	
Front Gear Case Bolts:				
6 mm	12 (8.8)	1.2 (0.90)	104 in·lb (78 in·lb)	mark 9 (no mark)
8 mm	29	3.0	22	
Speed Sensor Bolt	9.8	1.0	87 in·lb	L
Damper Cam Nut (Front Gear)	196	20.0	145	MO (threads)
Drive Gear Nut (Front Gear)	265	27.0	195	MO, St
Driven Gear Assy Mounting Bolts	25	2.5	18	
Driven Gear Bolt (Front Gear)	118	12.0	87	MO, St
Bearing Retainer Bolts (Front Gear)	8.8	0.90	78 in·lb	L
Final Gear Case Drain Bolt	8.8	0.90	78 in·lb	
Final Gear Case Mounting Nuts	34	3.5	25	
Final Gear Case Studs	–	–	–	L
Final Gear Case Cover Bolts:				
8 mm	23	2.3	17	L
10 mm	34	3.5	25	L

Downloaded from www.vulcanriders-sweden.org

Torque and Locking Agent

Fastener	Torque			Remarks
	N·m	kgf·m	ft·lb	
Pinion Gear Nut (Final Gear)	127	13.0	94	St, MO
Pinion Bearing Retainer (Final Gear)	245	25.0	181	Lh
Retainer Stop Screw	16	1.6	12	L
Brakes				
Caliper Bleed Valves	7.8	0.80	69 in·lb	
Brake Hose Banjo Bolts	25	2.5	18	
Brake Lever Pivot Bolt	1.0	0.10	8.7 in·lb	
Brake Lever Pivot Bolt Locknut	5.9	0.60	52 in·lb	
Front Brake Reservoir Cap Screws	1.5	0.15	13 in·lb	
Front Brake Light Switch Screw	1.2	0.12	10 in·lb	
Front Master Cylinder Clamp Bolts	8.8	0.90	78 in·lb	S
Front Caliper Mounting Bolts	34	3.5	25	
Rear Caliper Mounting Bolts	34	3.5	25	
Rear Caliper Holder Bolt	64	6.5	47	
Brake Disc Bolts	27	2.8	20	L
Rear Master Cylinder Mounting Bolts	25	2.5	18	
Rear Master Cylinder Push Rod Locknut	18	1.8	13	
Brake Pedal Clamp Bolt	25	2.5	18	
Suspension				
Front Fork Clamp Bolts (Upper)	20	2.0	14	
Front Fork Clamp Bolts (Lower)	20	2.0	14	
Headlight Cover Bolts ϕ6	7.4	0.75	65 in·lb	
Upper Fork Cover Bolts ϕ5	4.4	0.45	39 in·lb	
Front Fork Bottom Allen Bolts	20	2.0	14	L
Front Axle Clamp Bolt	34	3.5	25	S
Spacer Bolt	3.9	0.40	35 in·lb	
Rear Shock Absorber Nuts	34	3.5	25	
Shock Absorber Air Valves	5.4	0.55	47 in·lb	
Swingarm Pivot Shaft	108	11.0	80	G
Steering				
Steering Stem Head Nut (VN1500-N1 ~ N3)	54	5.5	40	
Steering Stem Head Nut (VN1500-N4 ~)	88	9.0	65	
Steering Stem Nut	4.9	0.50	43 in·lb	
Handlebar Holder Bolts	34	3.5	25	S
Handlebar Holder Nuts	34	3.5	25	
Handlebar End Caps	–	–	–	Lh, L
Handlebar Switch Housing Screws	3.4	0.35	30 in·lb	
Front Fork Clamp Bolts (Upper)	20	2.0	14	
Front Fork Clamp Bolts (Lower)	20	2.0	14	
Headlight Cover Bolts ϕ6	7.4	0.75	65 in·lb	
Upper Fork Cover Bolts ϕ5	4.4	0.45	39 in·lb	
Turn Signal Light Holder Bolts	7.4	0.75	65 in·lb	

Downloaded from www.vulcanriders-sweden.org

Torque and Locking Agent

Fastener	Torque			Remarks
	N·m	kgf·m	ft·lb	
Frame				
Downtube Bolts	44	4.5	32	
Front Footboard Bracket Bolts	34	3.5	25	
Rear Footpeg Bracket Bolts	20	2.0	14	
Sidestand Nut	44	4.5	32	
Electrical System				
Spark Plugs	18	1.8	13	
Pickup Coil Screws	2.9	0.30	26 in·lb	
Stator Lead Holder Screw	9.8	1.0	87 in·lb	L
Pickup Coil Lead Holder Bolt	9.8	1.0	87 in·lb	L
Alternator Outer Cover Bolts	12	1.2	104 in·lb	
Alternator Outer Cover Joint Bolts	12	1.2	104 in·lb	
Alternator Outer Cover Damper Bolts	9.8	1.0	87 in·lb	EO (tip)
Alternator Cover Bolts	9.8	1.0	87 in·lb	
Alternator Inner Cover Bolts	9.8	1.0	87 in·lb	
Alternator Rotor Bolt	78	8.0	57	MO
Alternator Outer Stator Bolts	13	1.3	113 in·lb	L
Alternator Inside Stator Bolts	13	1.3	113 in·lb	L
Timing Inspection Plug	1.5	0.15	13 in·lb	
Rotor Bolt Plug	1.5	0.15	13 in·lb	
Starter Motor Terminal Locknut	11	1.1	95 in·lb	
Starter Motor Terminal Nut	4.9	0.50	43 in·lb	
Starter Motor Assy Bolts	4.9	0.50	43 in·lb	
Starter Motor Mounting Bolts	9.8	1.0	87 in·lb	
Headlight Body Mounting Screws (inside)	2.9	0.30	26 in·lb	L
Headlight Rim Screws	1.0	0.10	8.7 in·lb	
Handlebar Switch Housing Screws	3.4	0.35	30 in·lb	
Starter Lockout Switch Screw	1.2	0.12	10 in·lb	
Front Brake Light Switch Screw	1.2	0.12	10 in·lb	
Sidestand Switch Bolt	8.8	0.90	78 in·lb	L
Radiator Fan Switch	18	1.8	13	
Water Temperature Switch	7.4	0.75	65 in·lb	SS
Oil Pressure Switch Terminal Bolt	1.5	0.15	13 in·lb	
Oil Pressure Switch	15	1.5	11	SS
Neutral Switch	15	1.5	11	
Turn Signal Light Lens Screws	1.0	0.10	8.7 in·lb	
Turn Signal Light Mounting Nuts	5.9	0.60	52 in·lb	
Speed Sensor Mounting Bolt	9.8	1.0	87 in·lb	

Downloaded from www.vulcanriders-sweden.org

Torque and Locking Agent

The table below, relating tightening torque to thread diameter, lists the basic torque for the bolts and nuts. Use this table for only the bolts and nuts which do not require a specific torque value. All of the values are for use with dry solvent-cleaned threads.

Basic Torque for General Fasteners

Threads dia. (mm)	Torque		
	N·m	kgf·m	ft·lb
5	3.4 ~ 4.9	0.35 ~ 0.50	30 ~ 43 in·lb
6	5.9 ~ 7.8	0.60 ~ 0.80	52 ~ 69 in·lb
8	14 ~19	1.4 ~1.9	10.0 ~ 13.5
10	25 ~ 34	2.6 ~ 3.5	19.0 ~ 25
12	44 ~ 61	4.5 ~ 6.2	33 ~ 45
14	73 ~ 98	7.4 ~ 10.0	54 ~ 72
16	115 ~ 155	11.5 ~ 16.0	83 ~ 115
18	165 ~ 225	17.0 ~ 23.0	125 ~ 165
20	225 ~ 325	23 ~ 33	165 ~ 240

Downloaded from www.vulcanriders-sweden.org

Special Tools and Sealants

Oil Pressure Gauge, 5 kgf/cm²:
57001-125

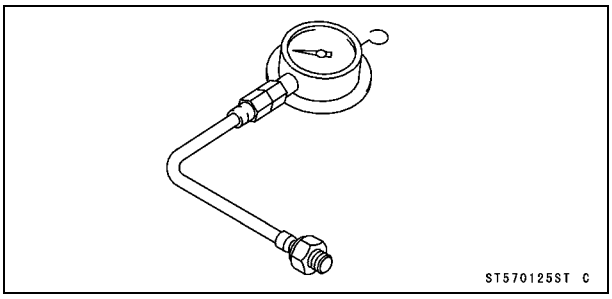

Inside Circlip Pliers:
57001-143

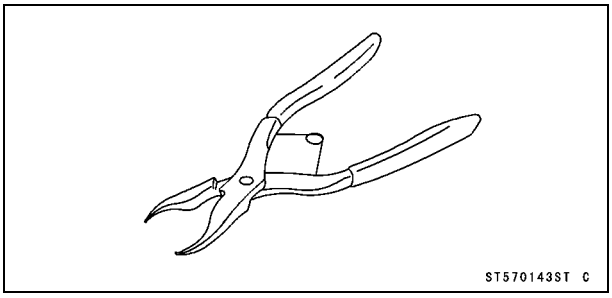

Outside Circlip Pliers:
57001-144

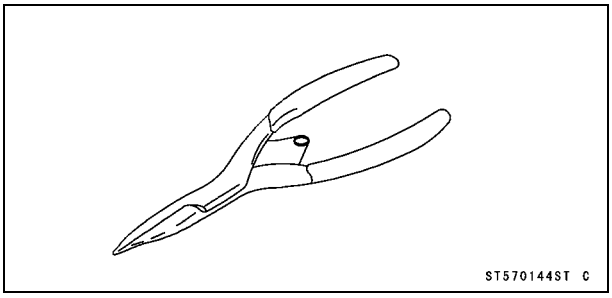

Bearing Puller:
57001-158

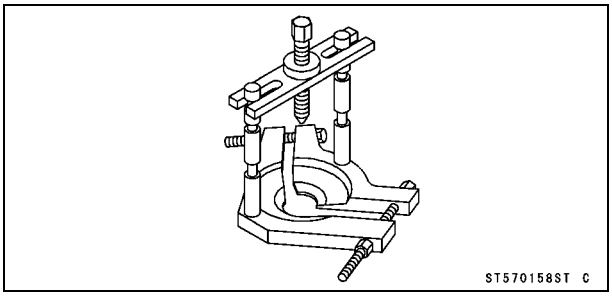

Valve Guide Reamer, ϕ7:
57001-162

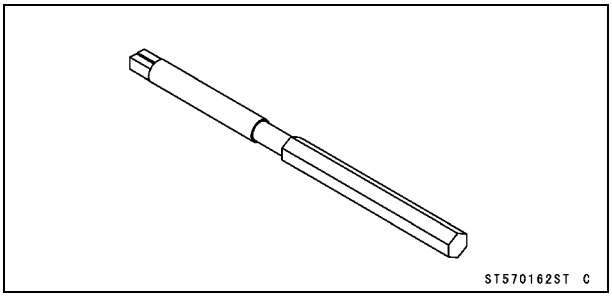

Valve Guide Arbor, ϕ7:
57001-163

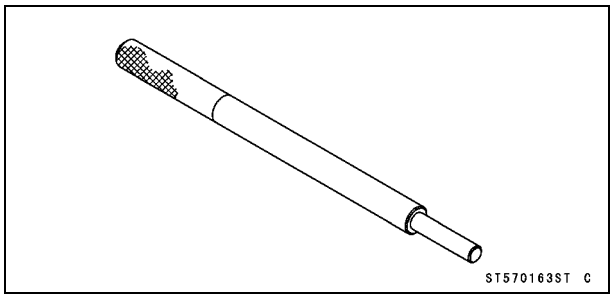

Fork Cylinder Holder Handle:
57001-183

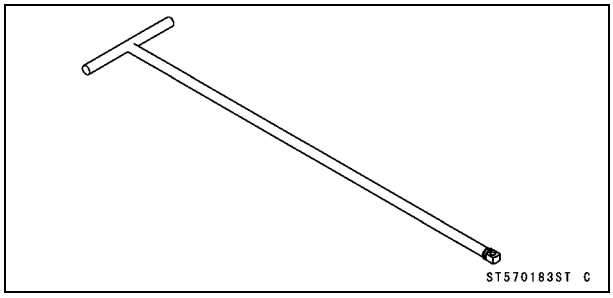

Compression Gauge, 20 kgf/cm²:
57001-221

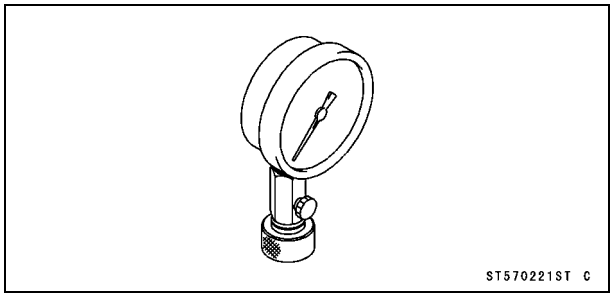

Valve Spring Compressor Assembly:
57001-241

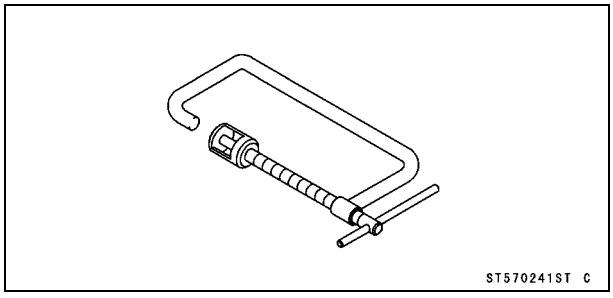

Valve Spring Compressor Adapter, ϕ28.2:
57001-243

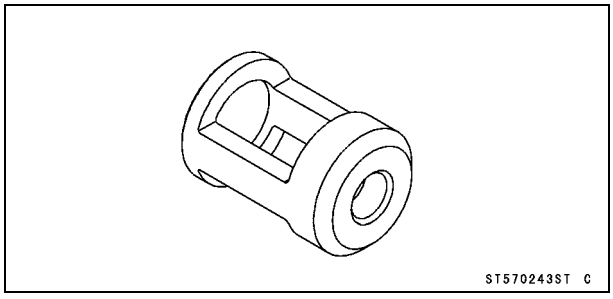

Downloaded from www.vulcanriders-sweden.org

Special Tools and Sealants

Bearing Puller Adapter:
57001-317

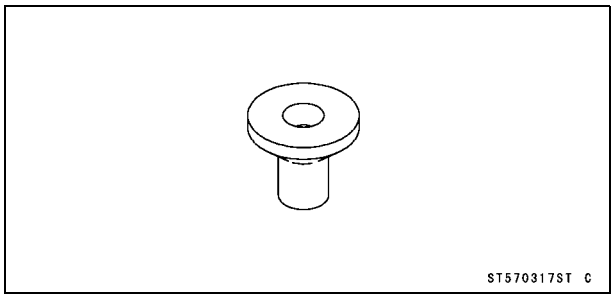

Bearing Driver, ϕ32:
57001-382

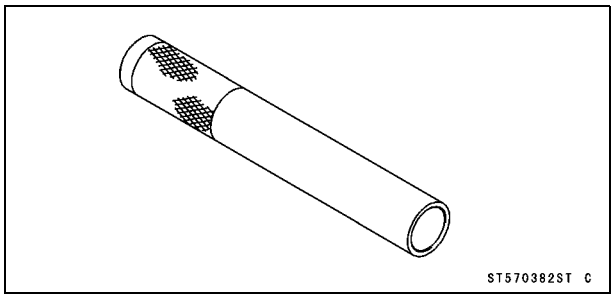

Piston Pin Puller Assembly:
57001-910

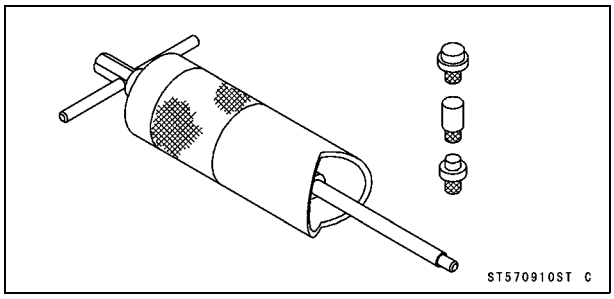

Gear Holder, m1.75:
57001-1015

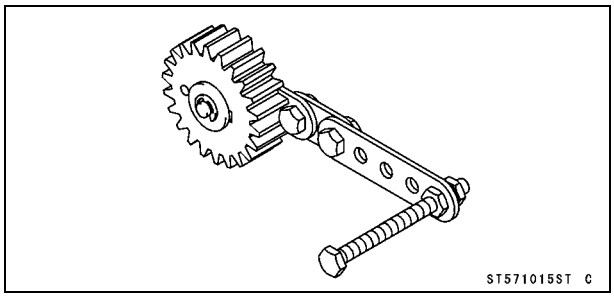

Compression Gauge Adapter, M12 × 1.25:
57001-1018

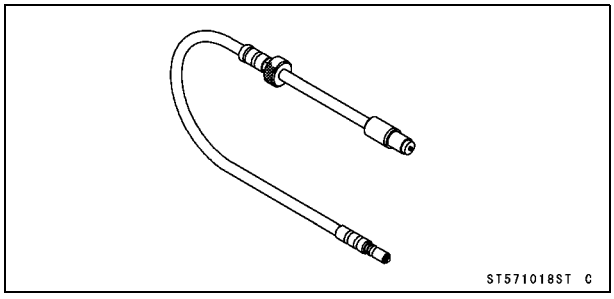

Spark Plug Wrench, Hex 18:
57001-1024

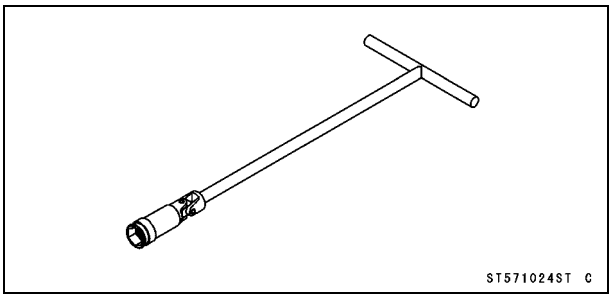

Damper Cam Holder:
57001-1025

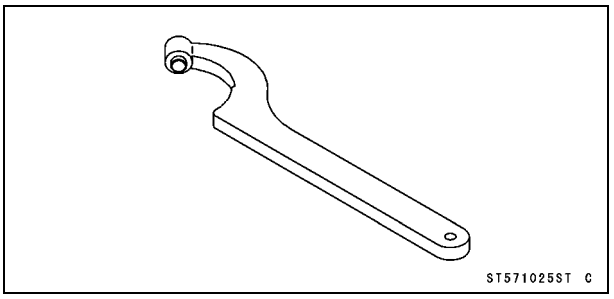

Driven Gear Holder, m2:
57001-1027

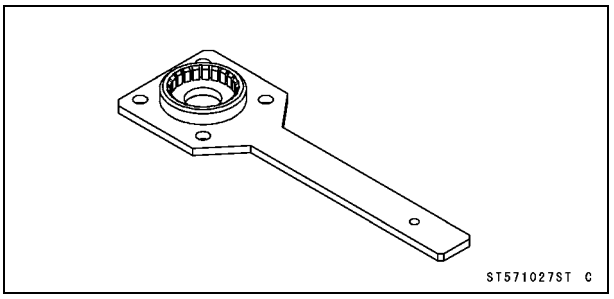

Oil Pressure Gauge Adapter, PT 1/8:
57001-1033

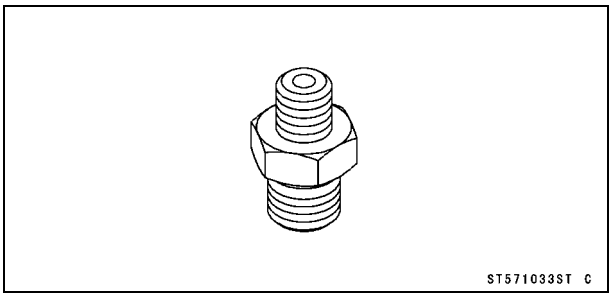

Fork Cylinder Holder Adapter:
57001-1057

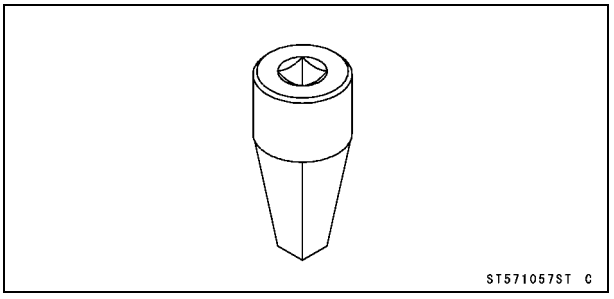

Downloaded from www.vulcanriders-sweden.org

Special Tools and Sealants

Oil Seal & Bearing Remover:
57001-1058

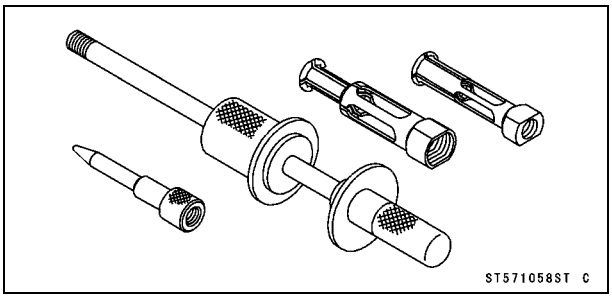

Head Pipe Outer Race Press Shaft:
57001-1075

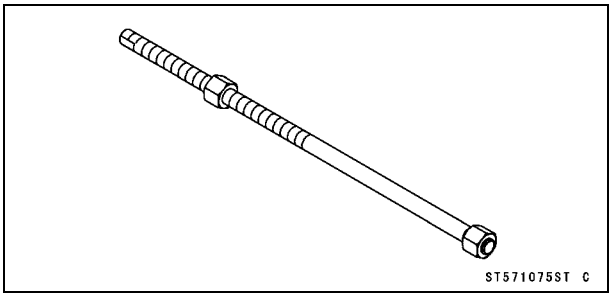

Head Pipe Outer Race Driver, ϕ54.5:
57001-1077

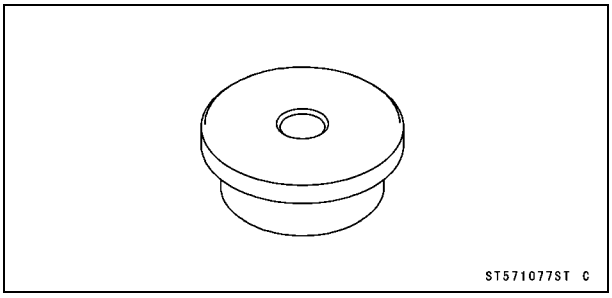

Piston Ring Compressor Grip:
57001-1095

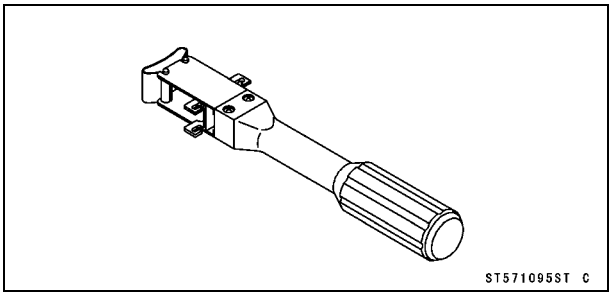

Steering Stem Nut Wrench:
57001-1100

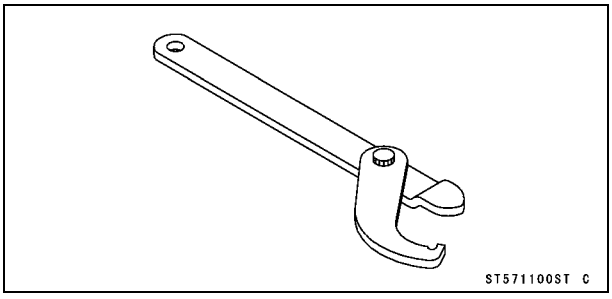

Head Pipe Outer Race Remover ID > 37 mm:
57001-1107

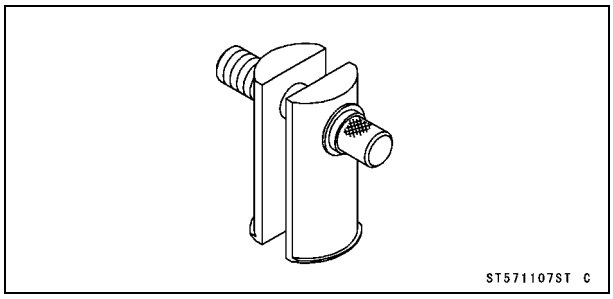

Valve Seat Cutter, 45° - ϕ32:
57001-1115

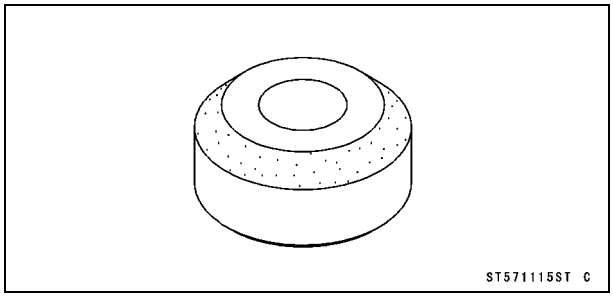

Valve Seat Cutter, 45° - ϕ35:
57001-1116

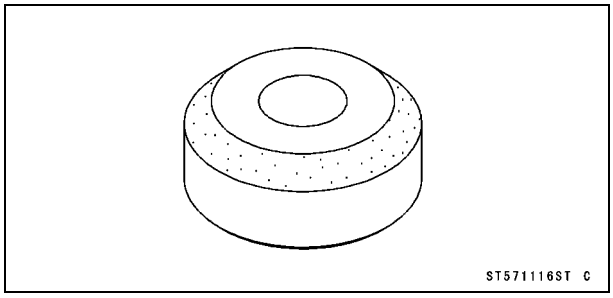

Valve Seat Cutter, 32° - ϕ35:
57001-1121

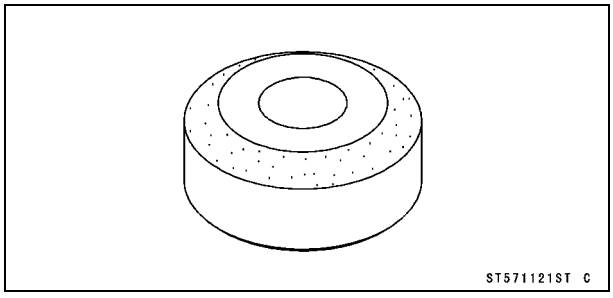

Valve Seat Cutter Holder, ϕ7:
57001-1126

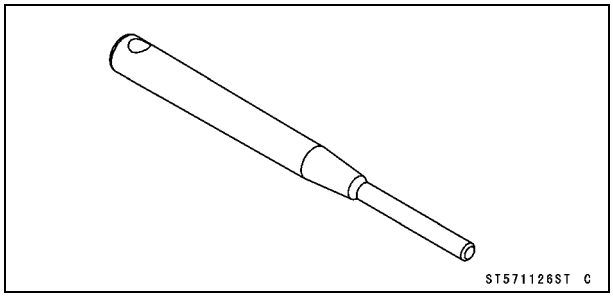

Downloaded from www.vulcanriders-sweden.org

Special Tools and Sealants

Valve Seat Cutter Holder Bar:
57001-1128

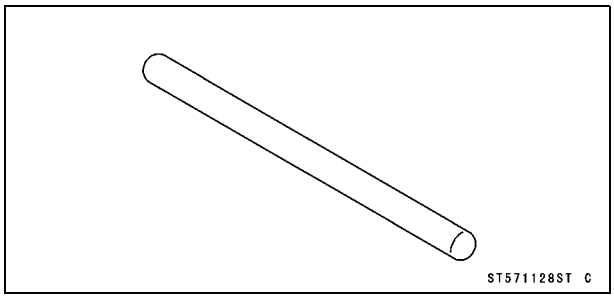

Bearing Driver Set:
57001-1129

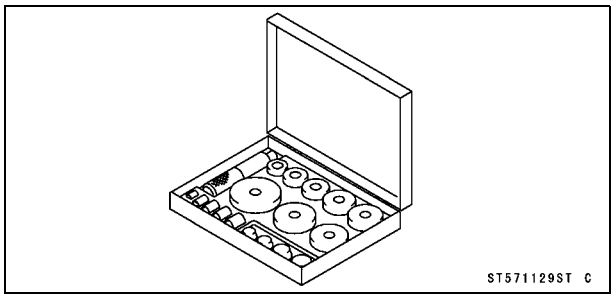

Pinion Gear Holder, m1.9:
57001-1165

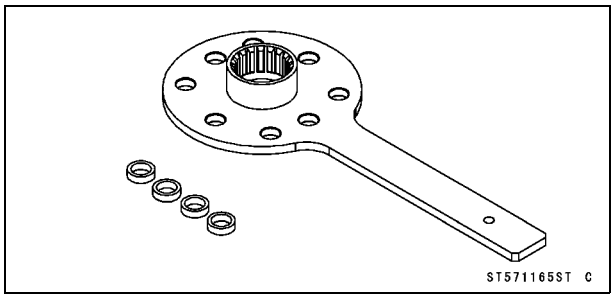

Valve Seat Cutter, 32° - ϕ33:
57001-1199

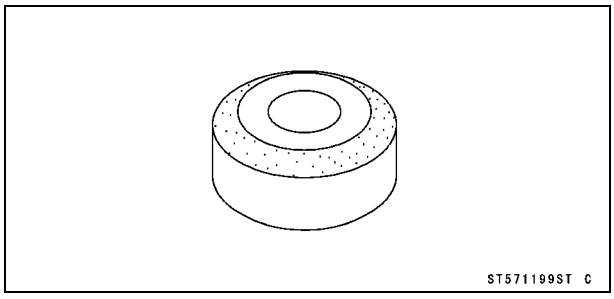

Hexagon Wrench, Hex 27:
57001-1210

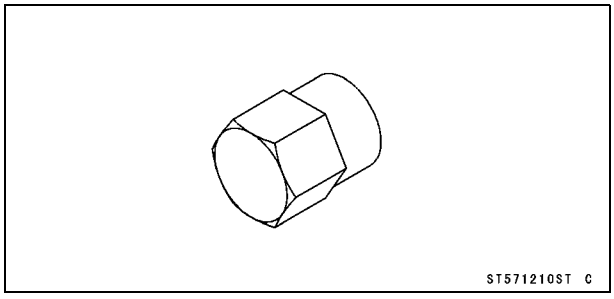

Piston Pin Puller Adapter, ϕ14:
57001-1211

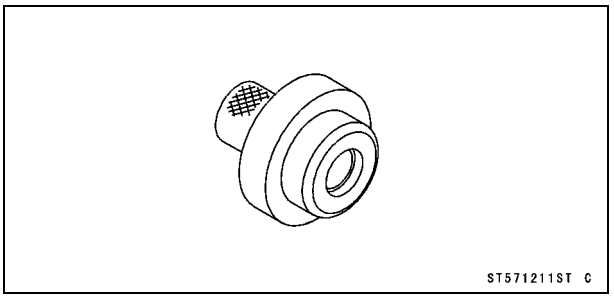

Fork Outer Tube Weight:
57001-1218

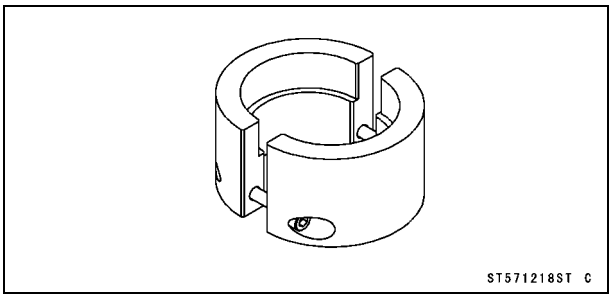

Front Fork Oil Seal Driver:
57001-1219

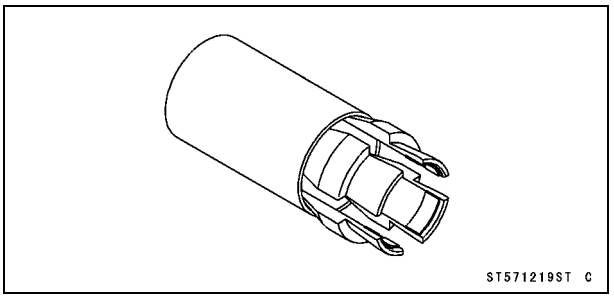

Jack:
57001-1238

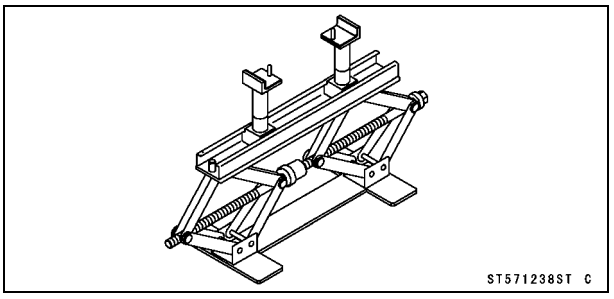

Timing Light:
57001-1241

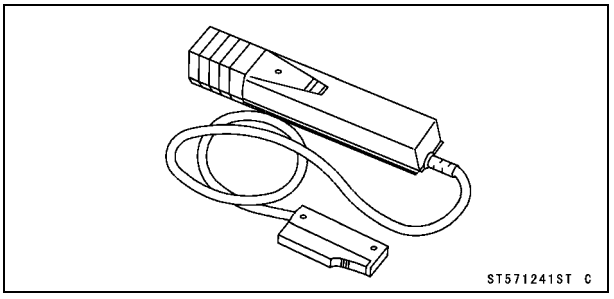

Downloaded from www.vulcanriders-sweden.org

Special Tools and Sealants

Valve Seat Cutter, 55° - ϕ35:
57001-1247

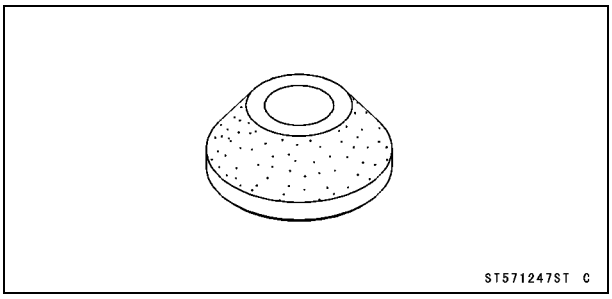

Oil Filter Wrench:
57001-1249

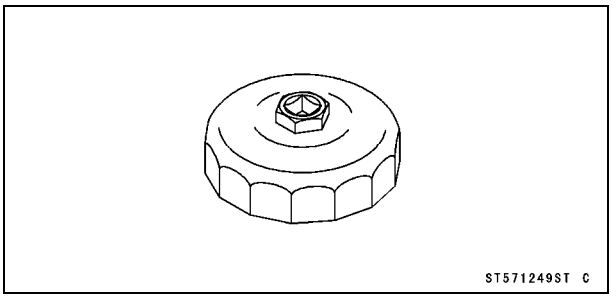

Final Gear Case Holder:
57001-1250

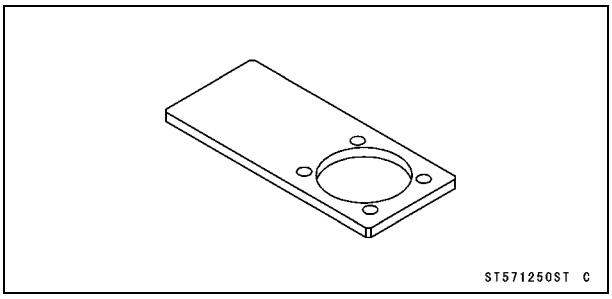

Bearing Retainer Wrench:
57001-1251

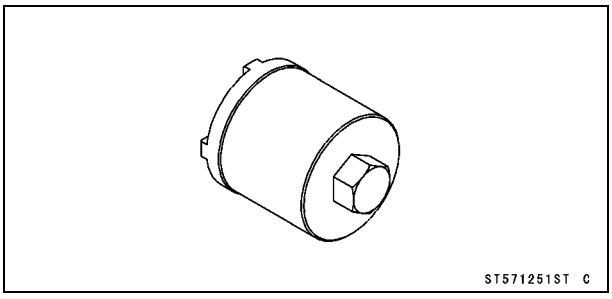

Bearing Remover Shaft, ϕ9:
57001-1265

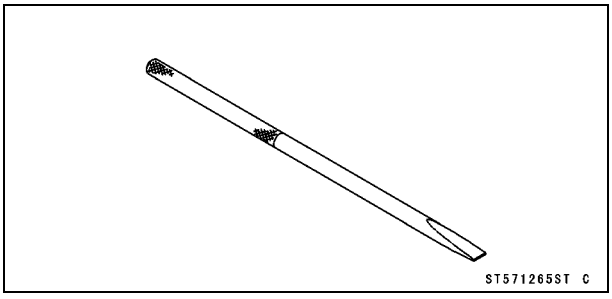

Bearing Remover Head, ϕ10 × ϕ12:
57001-1266

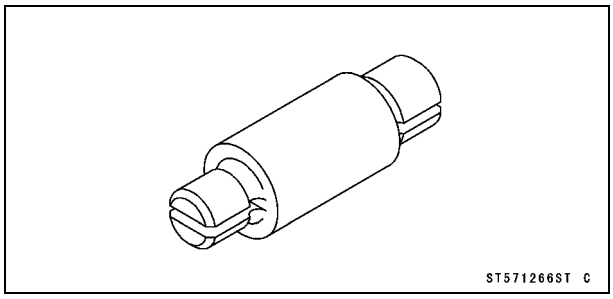

Fork Oil Level Gauge:
57001-1290

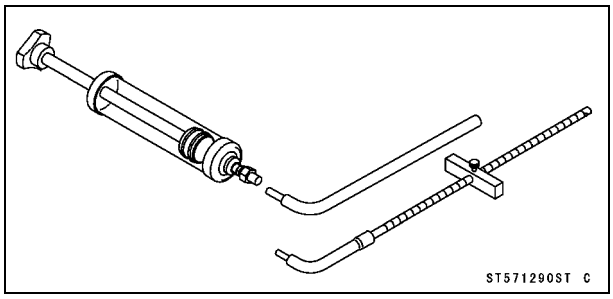

Bearing Remover Head, ϕ20 × ϕ22:
57001-1293

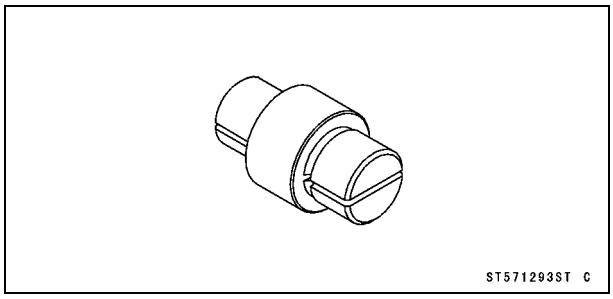

Steering Stem Bearing Driver, ϕ42.5:
57001-1344

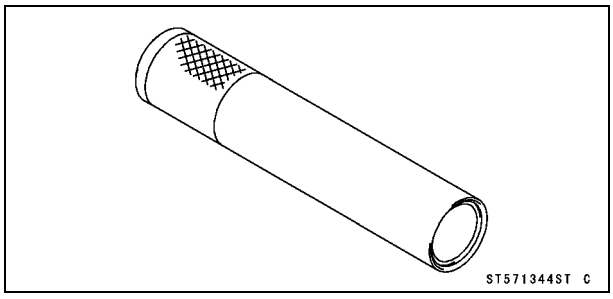

Flywheel Holder:
57001-1313

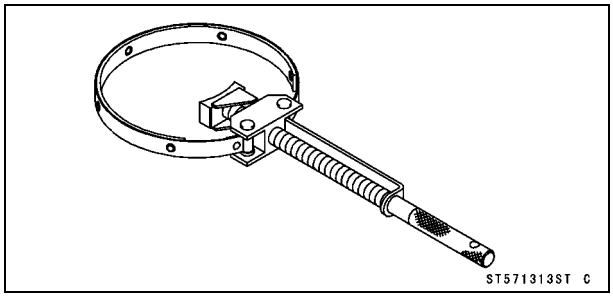

Downloaded from www.vulcanriders-sweden.org

Special Tools and Sealants

Steering Stem Bearing Driver Adapter, ϕ41.5:
57001-1345

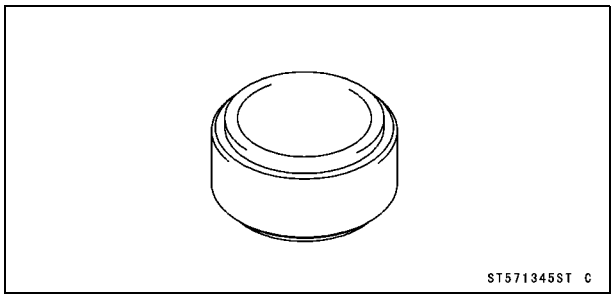

Piston Ring Compressor Belt, ϕ95 ~ ϕ108:
57001-1358

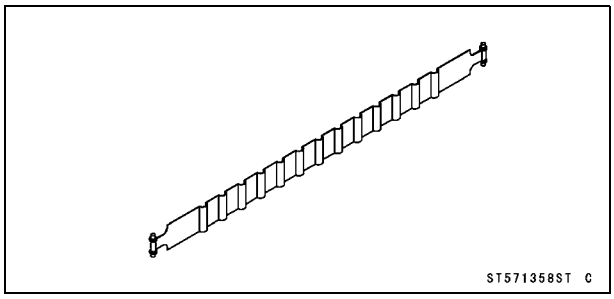

Bearing Remover Shaft, ϕ13:
57001-1377

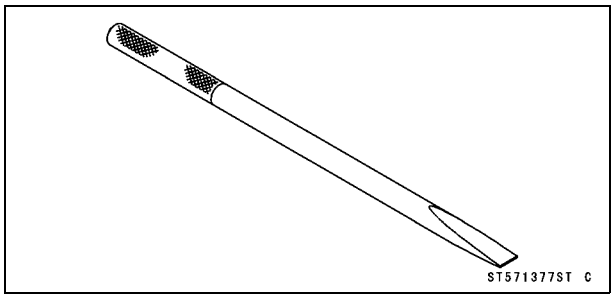

Hand Tester:
57001-1394

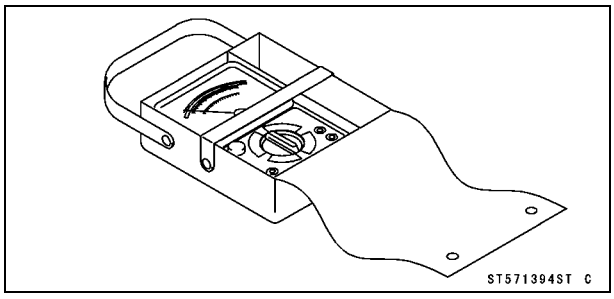

Attachment Jack:
57001-1398

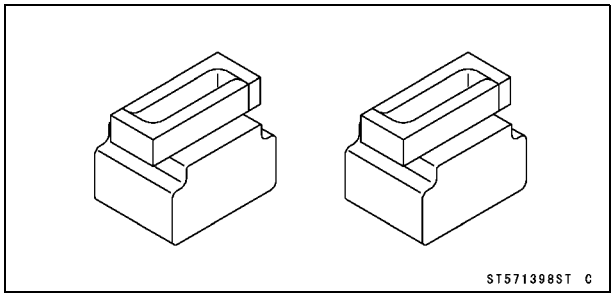

Drive Shaft Holder:
57001-1407

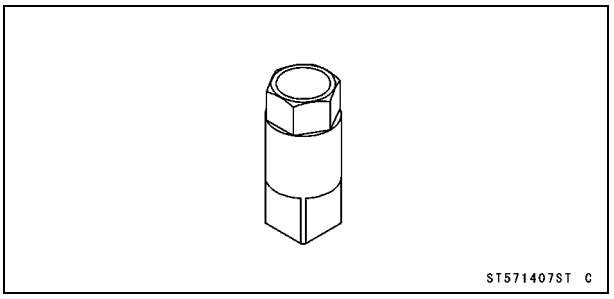

Flywheel Holder:
57001-1410

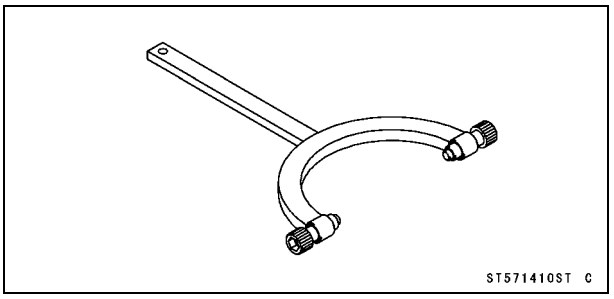

Peak Voltage Adapter:
57001-1415

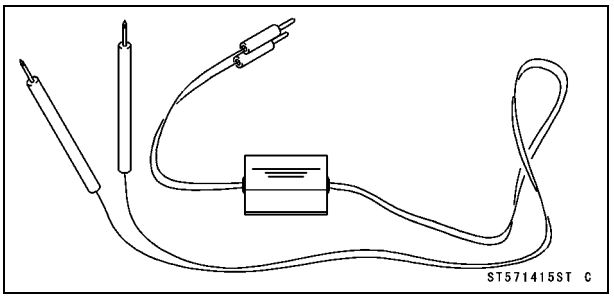

Filler Cap Driver:
57001-1454

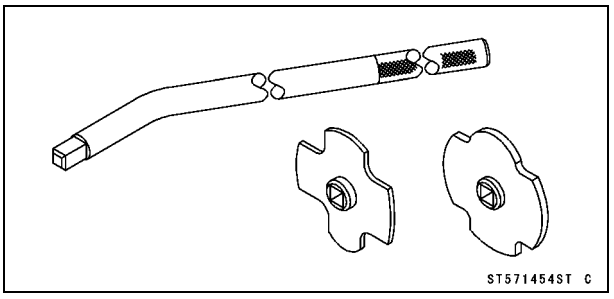

Needle Adapter Set:
57001-1457

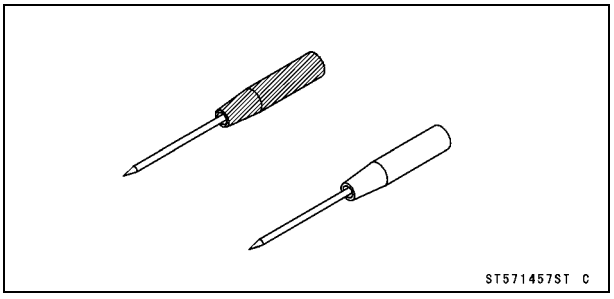

Downloaded from www.vulcanriders-sweden.org

Special Tools and Sealants

Fuel Pressure Gauge Adapter:
57001-1593

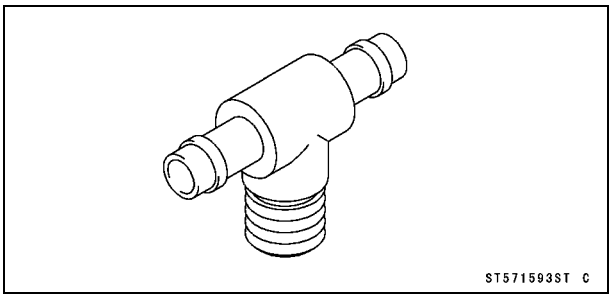

Fuel Hose:
57001-1607

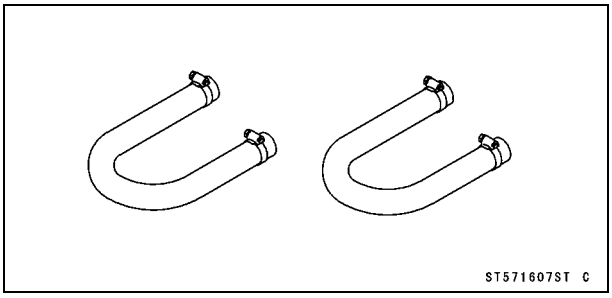

Kawasaki Bond (Silicone Sealant):
56019-120

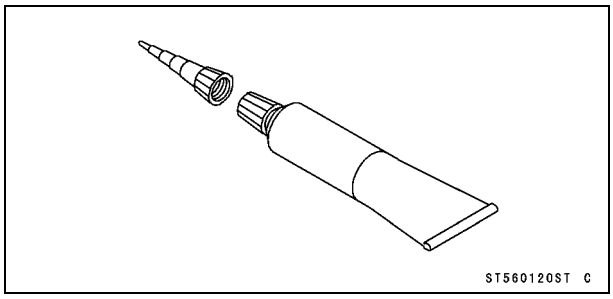

Kawasaki Bond(Liquid Gasket - Black):
92104-1003

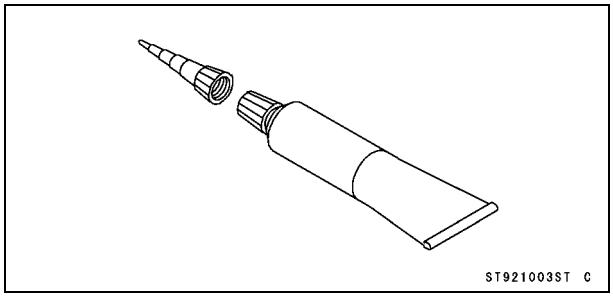

Downloaded from www.vulcanriders-sweden.org

Cable, Wire, and Hose Routing

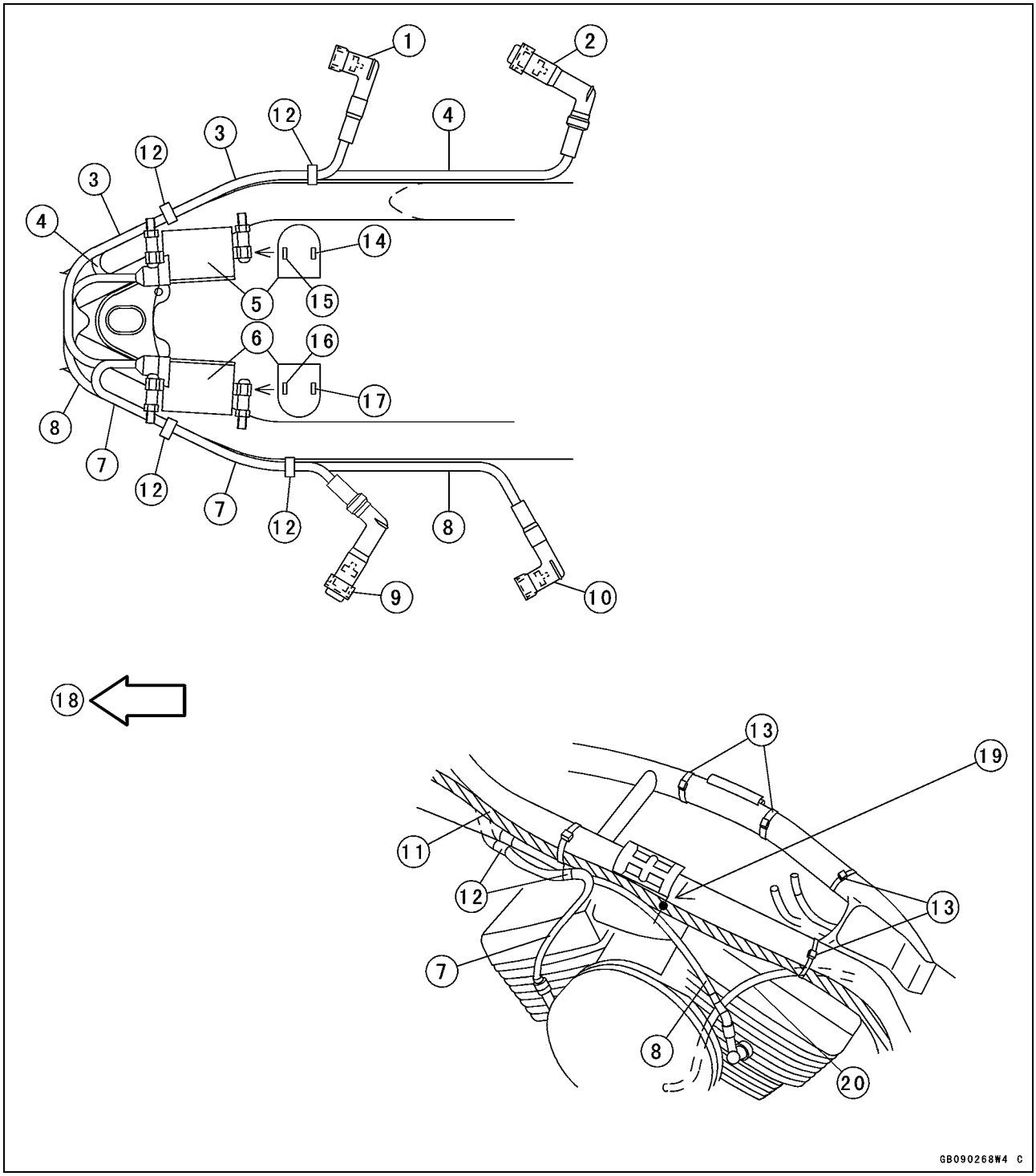

1. Front Right Spark Plug Cap
2. Rear Right Spark Plug Cap
3. 2nd Lead from the left ignition coil lower side
4. 2nd Lead from the right ignition coil lower side
5. Ignition Coil for Rear Spark Plugs
6. Ignition Coil for Front Spark Plugs
7. 2nd Lead from the left ignition coil upper side
8. 2nd Lead from the right ignition coil upper side
9. Front Left Spark Plug Cap
10. Rear Left Spark Plug Cap
11. Clutch Hose
12. Plastic Clamps
13. Straps
14. BK/G Primary Lead
15. R/G Primary Lead
16. BK Primary Lead
17. R/G Primary Lead
18. Front
19. Align the white mark with the back of the damper.
20. Canister Purge Hose (green, CAL)

Downloaded from www.vulcanriders-sweden.org

Cable, Wire, and Hose Routing

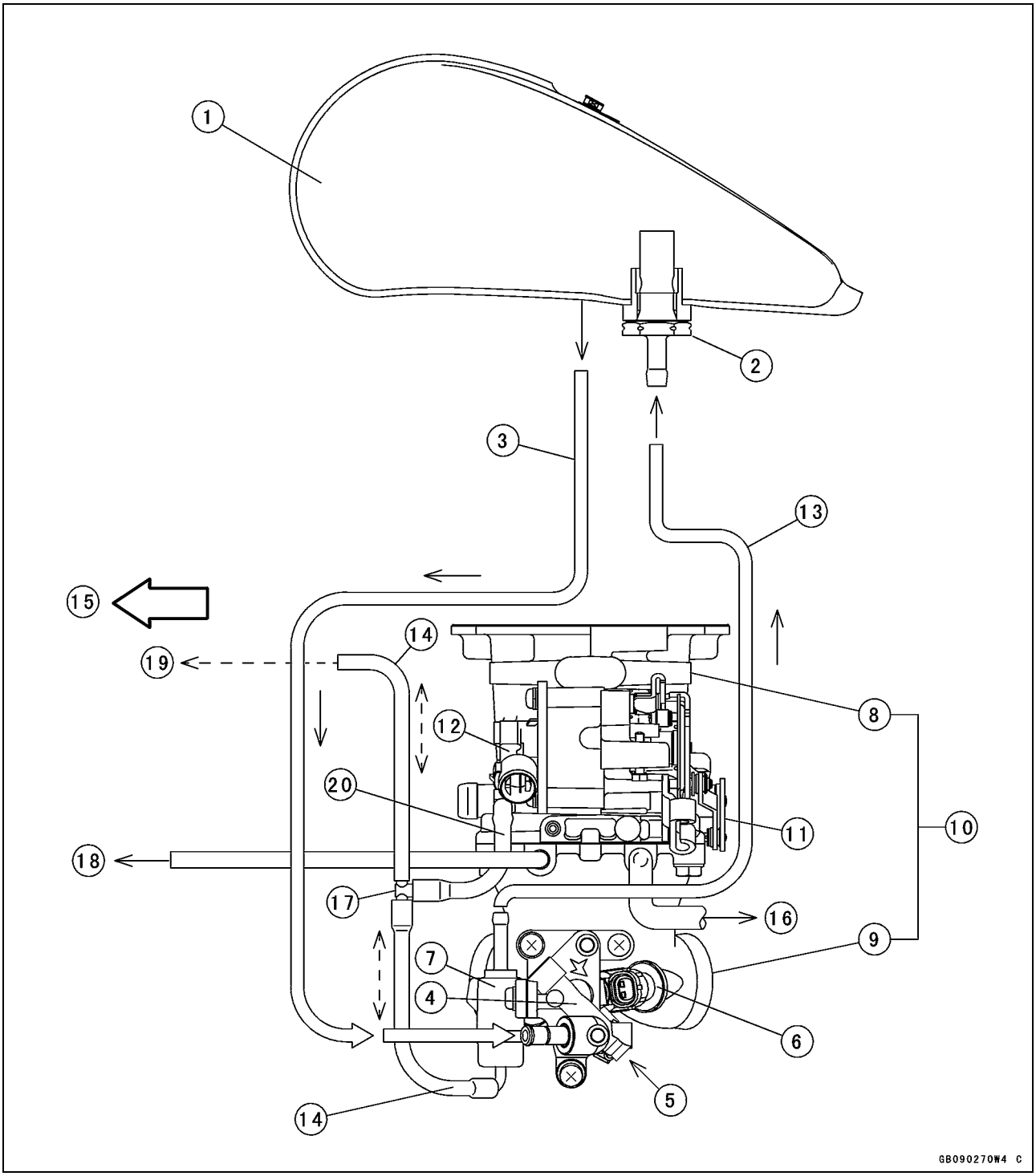

Downloaded from www.vulcanriders-sweden.org

Cable, Wire, and Hose Routing

- - >: Vacuum Pulsation
→: Fuel Flow
#1: For Front Cylinder
#2: For Rear Cylinder
1. Fuel Tank (left view)
2. Return Fuel Check Valve
3. High Pressure Fuel Hoses
4. Delivery Joint
5. Fuel Injector #1
6. Fuel Injector #2
7. Pressure Regulator
8. Throttle Body
9. Inlet Manifold
10. Throttle Assy (top view)
11. Throttle Pulley
12. Throttle Sensor
13. Low Pressure (Return) Fuel Hose
14. Vacuum Hoses from Throttle Body
15. Front
16. Vacuum Hose (white, CAL)
17. T-Joint
18. Vacuum Switch Valve
19. Vacuum Sensor
20. Vacuum Hose

Downloaded from www.vulcanriders-sweden.org

Cable, Wire, and Hose Routing

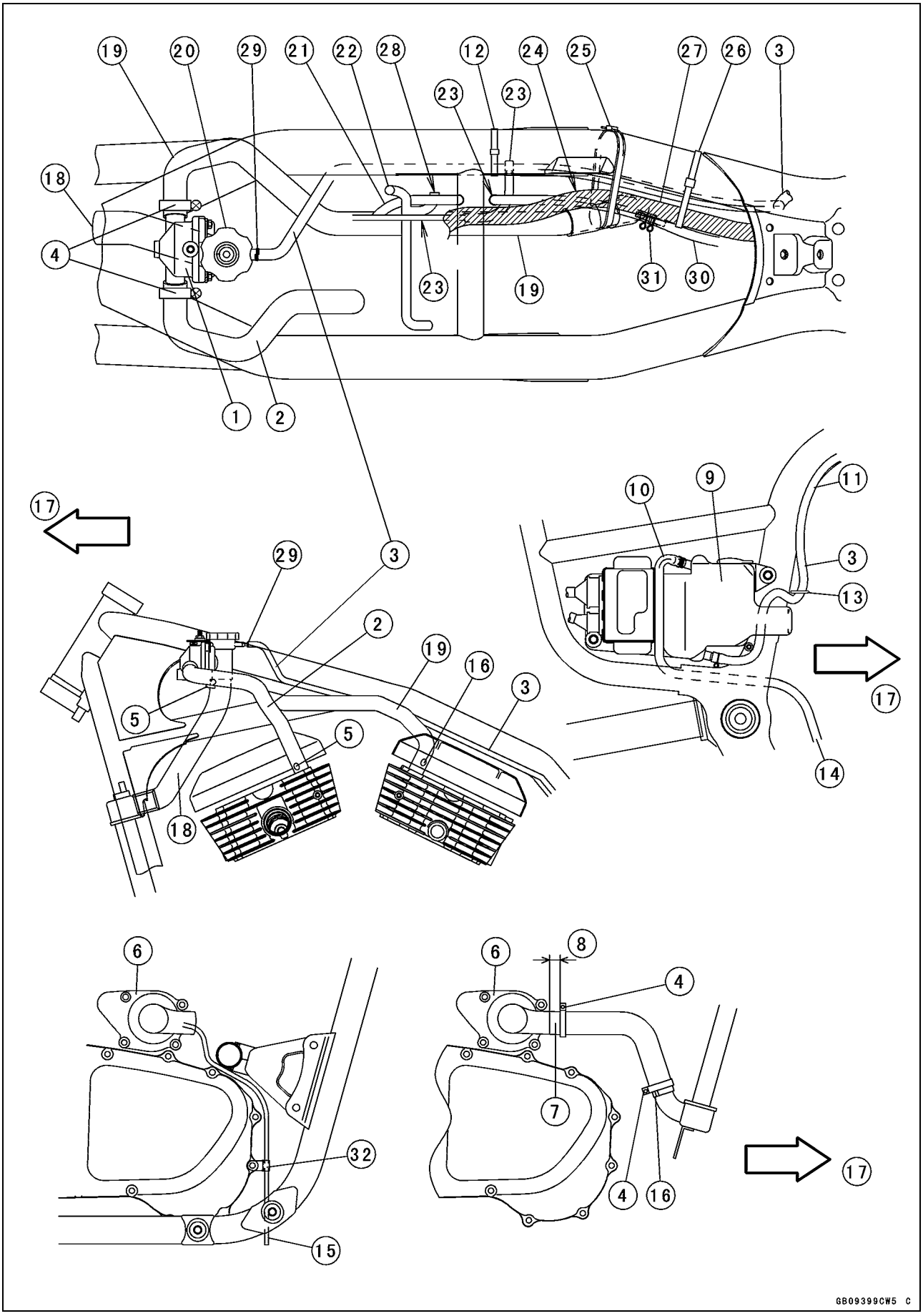

Downloaded from www.vulcanriders-sweden.org

Cable, Wire, and Hose Routing

#1: For Front Cylinder
#2: For Rear Cylinder
1. Thermostat Housing
2. Water Hoses #1
3. Reserve Tank Hose
4. Clamps: Position the screw head as shown.
5. White marks on the hose [2] face forward.
6. Water Pump
7. Insert the hose until the end touches the water pump inlet step.
8. Gap between Pump Inlet Step and Clamp End: 13 ~ 16 mm
9. Coolant Reserve Tank
10. Overflow Hose: Run the hose outside the reserve tank and under the main harness.
11. Run the hose inside the frame.
12. Straps (Clamp the coolant reserve tank hose)
13. Run the hose [3] through the holder.
14. Insert the hose [10] into the holder on the rear of the engine.
15. Water Pump Drainage Outlet Hose
16. White mark on the hose faces rear.
17. Front
18. Radiator Hose
19. Water Hose #2
20. Radiator Cap
21. Vacuum Switch Valve Hose
22. Vacuum Hose connected to Vacuum Senor, Pressure Regulator, and Throttle Body
23. Choke Cable over the hose [22]
24. Run the main harness [27] so it does not touch the edge of the frame pipe around here.
25. Band which holds [3], [19], [27] and [30]: Hold the water hose [19] so the band does not pinch [19].
26. Band which holds [27]
27. Main Harness
28. Run the hose [21] above the vacuum hose from the throttle body around here.
29. Clip
30. Vacuum Hose (white, CAL): Run over the throttle cables and the choke cable.
31. Fitting (CAL)
32. Clamp

CAL: California Model

Downloaded from www.vulcanriders-sweden.org

Cable, Wire, and Hose Routing

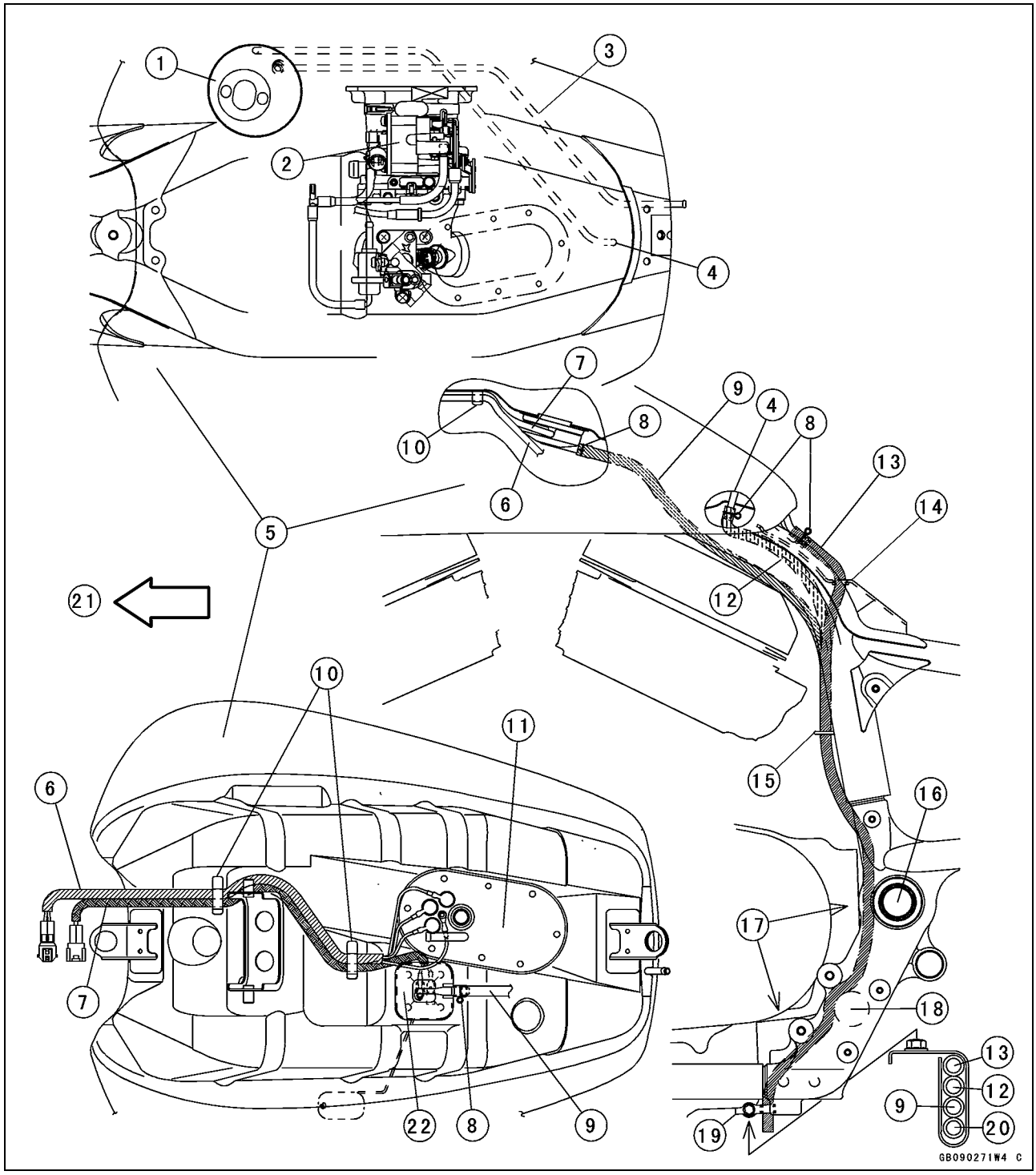

1. Fuel Tank Filler
2. Throttle Assy
3. Fuel Tank Breather Pipe
4. Filler Drain Pipe
5. Fuel Tank
6. Fuel Pump Leads
7. Fuel Level Sensor Leads
8. Clips
9. Fuel Level Sensor Drain Hose (Run it right and out side of the air vent hose.)
10. Welded Clamps (holds [6], [7])
11. Fuel Pump Base Plate
12. Fuel Tank Filler Drain Hose
13. Fuel Tank Breather Hose (Except for California Model)
14. Run the hose [13] into the right hole of the bracket.
15. Holder
16. Swingarm Pivot
17. Run these hoses in front of the [16], [18].
18. Cross Pipe
19. Clamp
20. Coolant Reserve Tank Overflow Hose
21. Front
22. Fuel Level Sensor: Install it so that the fitting of it faces to backward.

Downloaded from www.vulcanriders-sweden.org

Cable, Wire, and Hose Routing

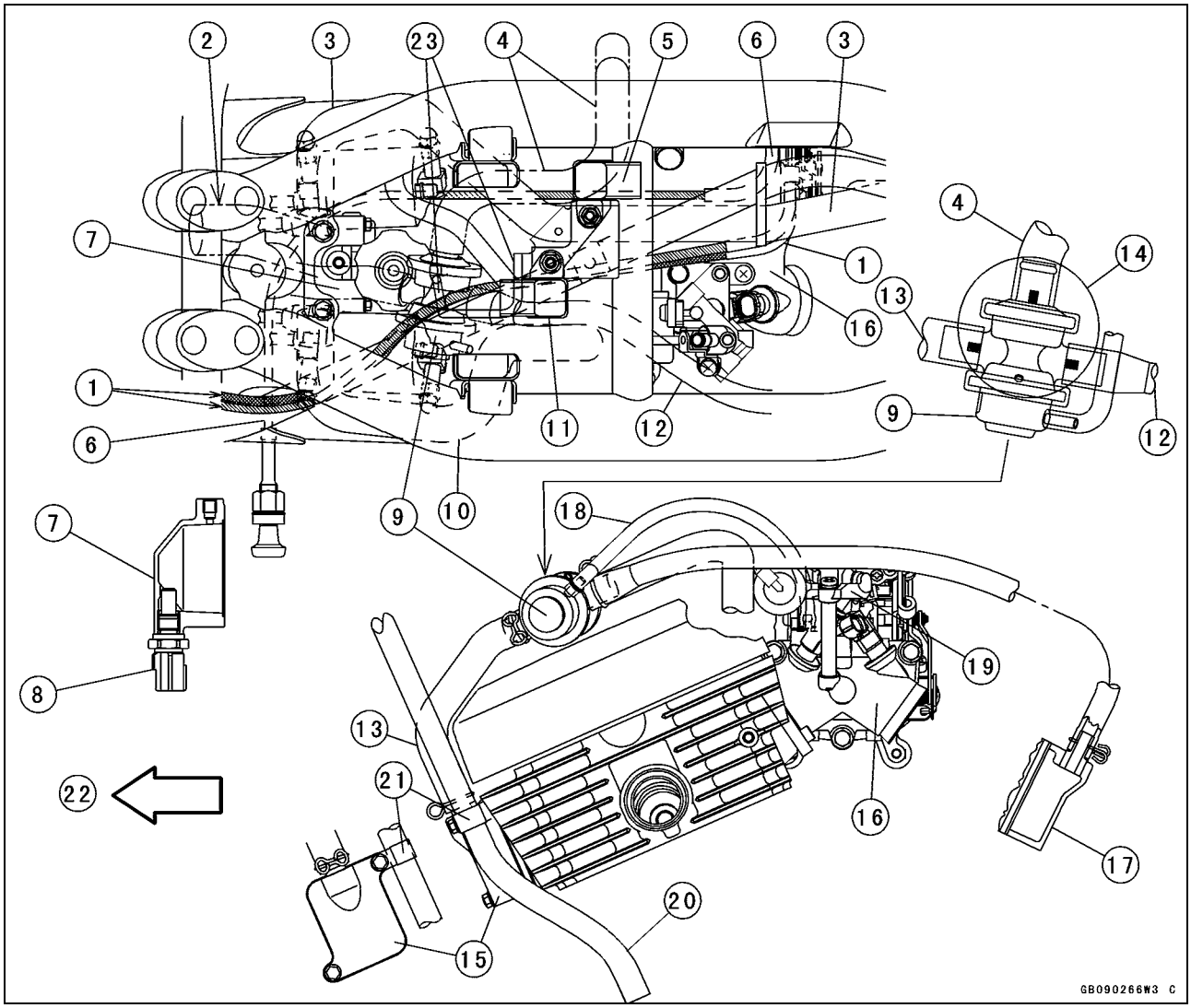

1. Throttle Cables: First, run these cables over the hose [10], inside the sensor holder hook [23], then under the hose [3], and connect these cables to the throttle pulley.
2. Radiator Hose to the radiator
3. Water Hose #2
4. Vacuum Switch Valve Hose to the right air cleaner base
5. Vacuum Sensor (DFI)
6. Choke Cable: First, run the cable over the Hose [2], then under the hose [3], over the hose [4], and then outside the hose [3], and connect the cable to the throttle pulley.
7. Thermostat Housing
8. Water Temperature Sensor (DFI)
9. Vacuum Switch Valve
10. Water Hose #1
11. Atmospheric Pressure Sensor (DFI)
12. Vacuum Switch Valve Hose #2
13. Vacuum Switch Valve Hose #1
14. Position the white marks as shown.
15. Air Suction Valve Cover #1
16. Throttle Assy
17. Air Suction Valve Cover #2
18. Vacuum Hose between Vacuum Switch Valve and Throttle Body
19. Delivery Joint
20. Crankcase Breather Hose
21. Clamp
22. Front
23. Sensor Holder Hook

Downloaded from www.vulcanriders-sweden.org

Cable, Wire, and Hose Routing

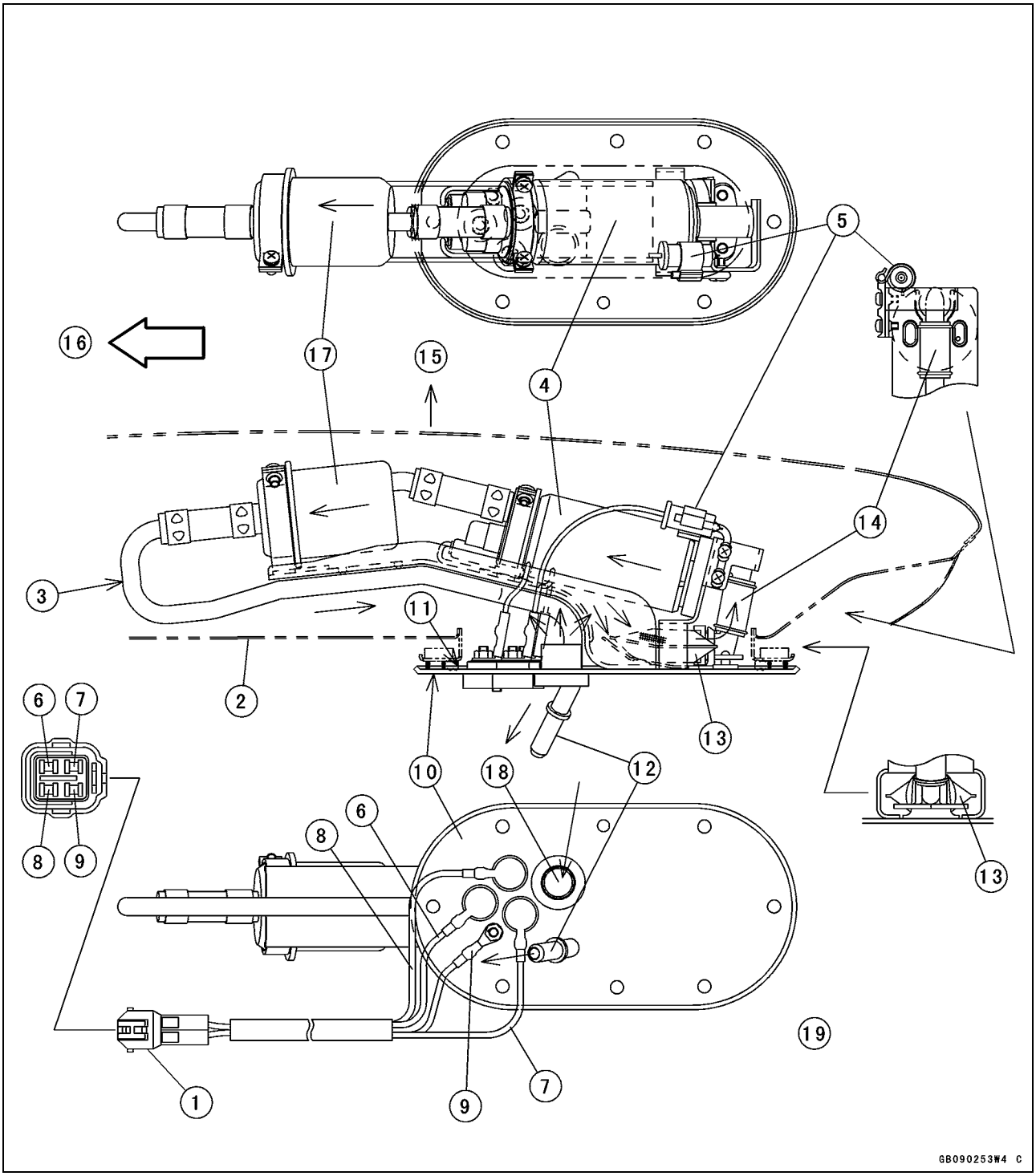

→: Fuel Flow
1. Fuel Pump Connector (outside the fuel tank)
2. Bottom of Fuel Tank
3. Outlet Fuel Pipe
4. In-tank Fuel Pump Body (DFI)
5. Fuel Reserve Switch (Thermostat)
6. Pump Motor (–) Lead (BK/W)
7. Pump Motor (+) W/R Lead
8. Fuel Reserve Switch R/BK (+) Lead
9. Fuel Reserve Switch BK/Y (–) Lead
10. Pump Base Plate
11. Base Plate Gasket
12. Outlet Fuel Pipe Joint
13. Fuel Pump Screen (Pump Inlet)
14. Inlet Fuel Hose
15. Top
16. Front
17. Fuel Filter
18. Return Fuel Check Valve
19. Bottom View

Downloaded from www.vulcanriders-sweden.org

Cable, Wire, and Hose Routing

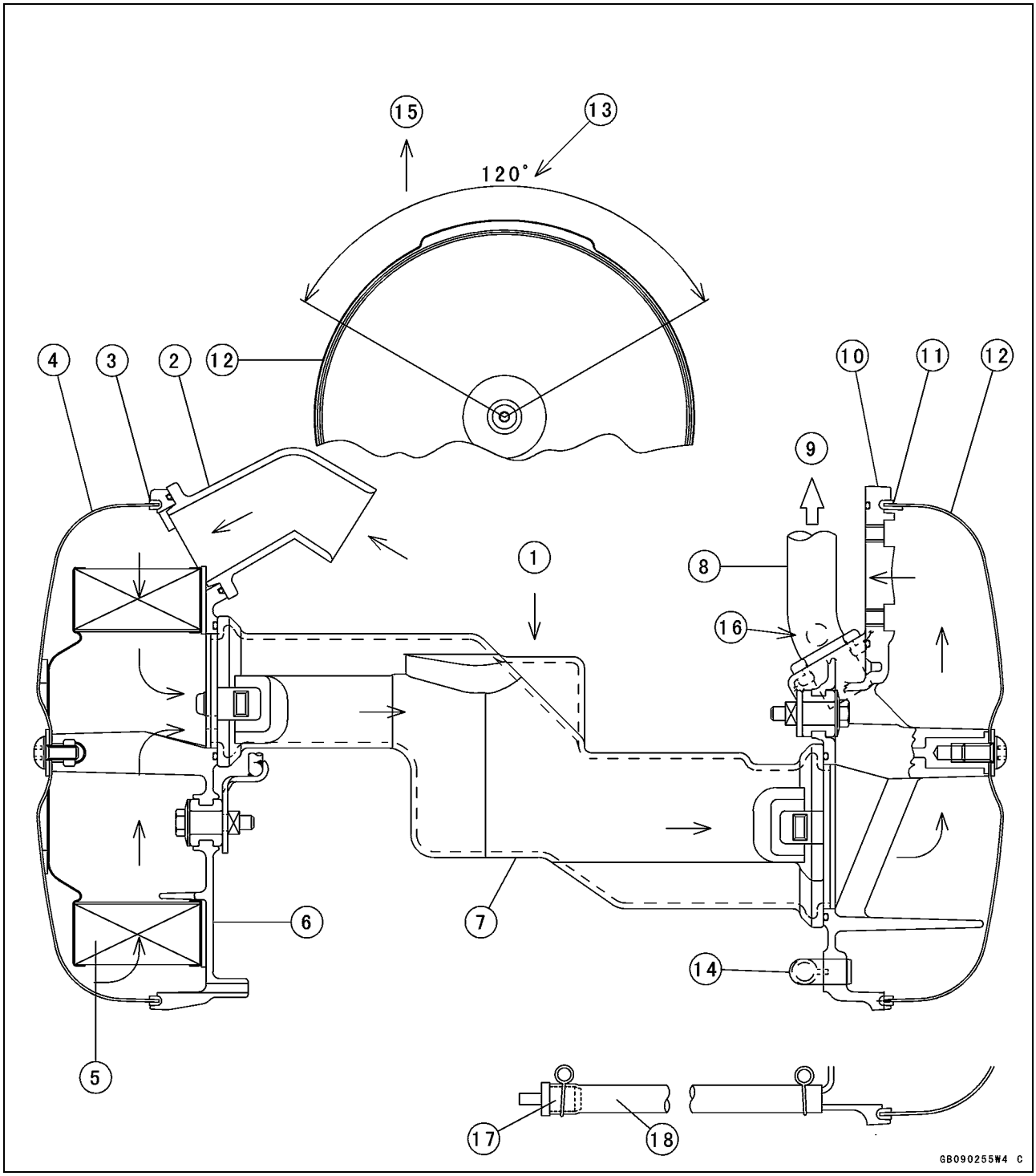

→: Inlet Air Flow
1. Rear View
2. Air Inlet
3. Left Rubber Gasket
4. Left Air Cleaner Cover
5. Air Cleaner Element
6. Left Air Cleaner Base
7. Lower Air Cleaner Duct
8. Vacuum Switch Valve Hose
9. To Vacuum Switch Valve
10. Right Air Cleaner Base
11. Right Rubber Gasket
12. Right Air Cleaner Cover
13. Locate the glued joint of the gasket within the angle.
14. Elbow Joint: connected to oil reserve tank
15. Top
16. White Mark on Hose [8] (front side): Position here.
17. Plug
18. Run this drain hose between cylinders.

Downloaded from www.vulcanriders-sweden.org

Cable, Wire, and Hose Routing

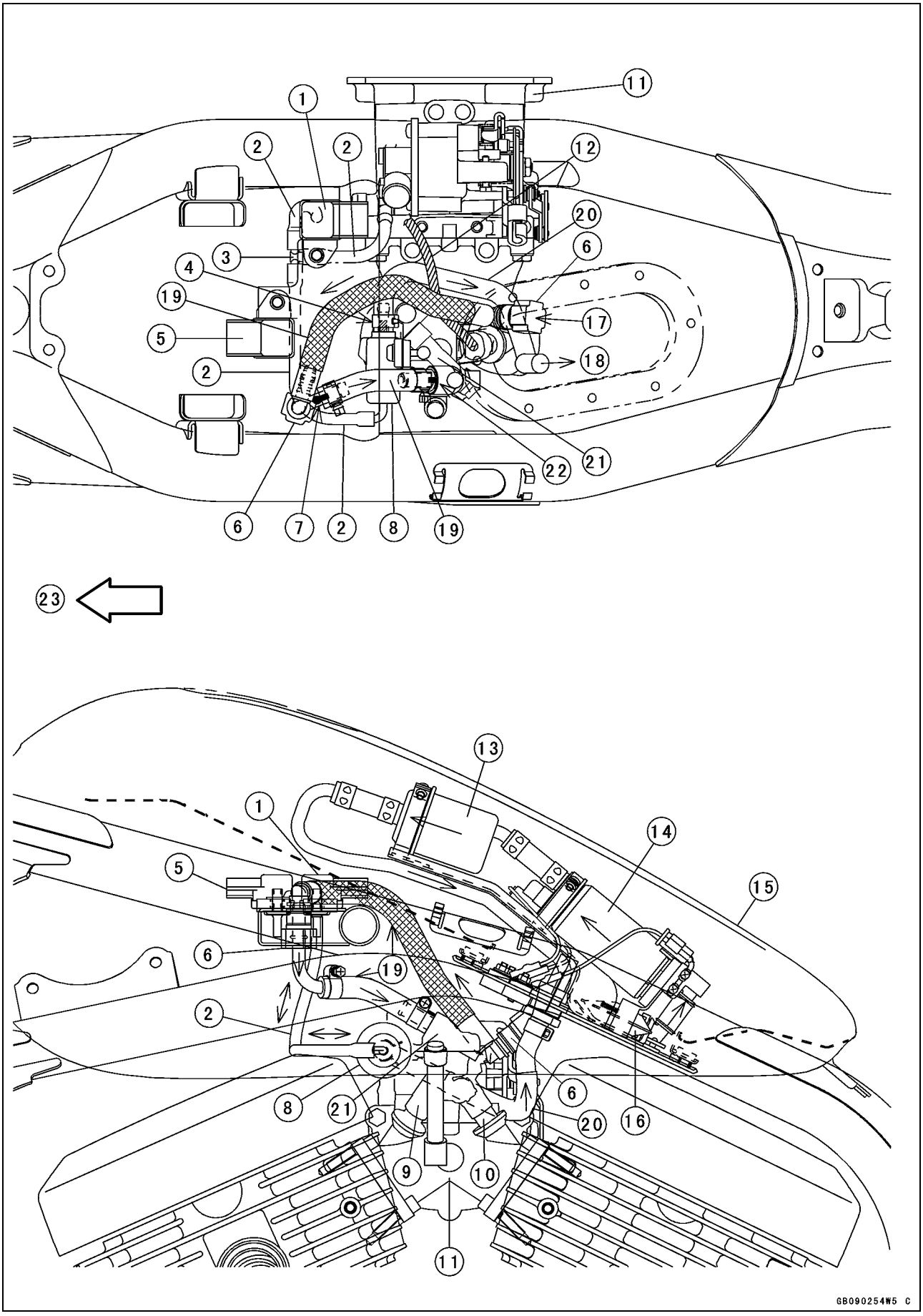

Downloaded from www.vulcanriders-sweden.org

Cable, Wire, and Hose Routing

→: Fuel Flow
1. Vacuum Sensor (with the vacuum hose)
2. Vacuum Hoses for the vacuum sensor and the pressure regulator
3. T-Joint
4. Insert the hose [20] with its mark up and hold the hose with the clamp.
5. Atmospheric Pressure Sensor
6. Outlet Hose Joints
7. Insert the hose [19] with its yellow mark up aligning with the mark on the pipe.
8. Pressure Regulator
9. Fuel Injector #1 for front cylinder
10. Fuel Injector #2 for rear cylinder
11. Throttle Assy
12. Harness for fuel injector #2
13. Intank-fuel Filter
14. Intank-fuel Pump
15. Fuel Tank
16. Fuel Pump Screen
17. Outlet Fuel from fuel tank
18. Return Fuel to fuel tank
19. High Pressure Fuel Hose (fuel supply)
20. Low Pressure Fuel Hose (fuel return)
21. Delivery Joint
22. Insert the hose [19] with its white mark up.
23. Front

Downloaded from www.vulcanriders-sweden.org

Cable, Wire, and Hose Routing

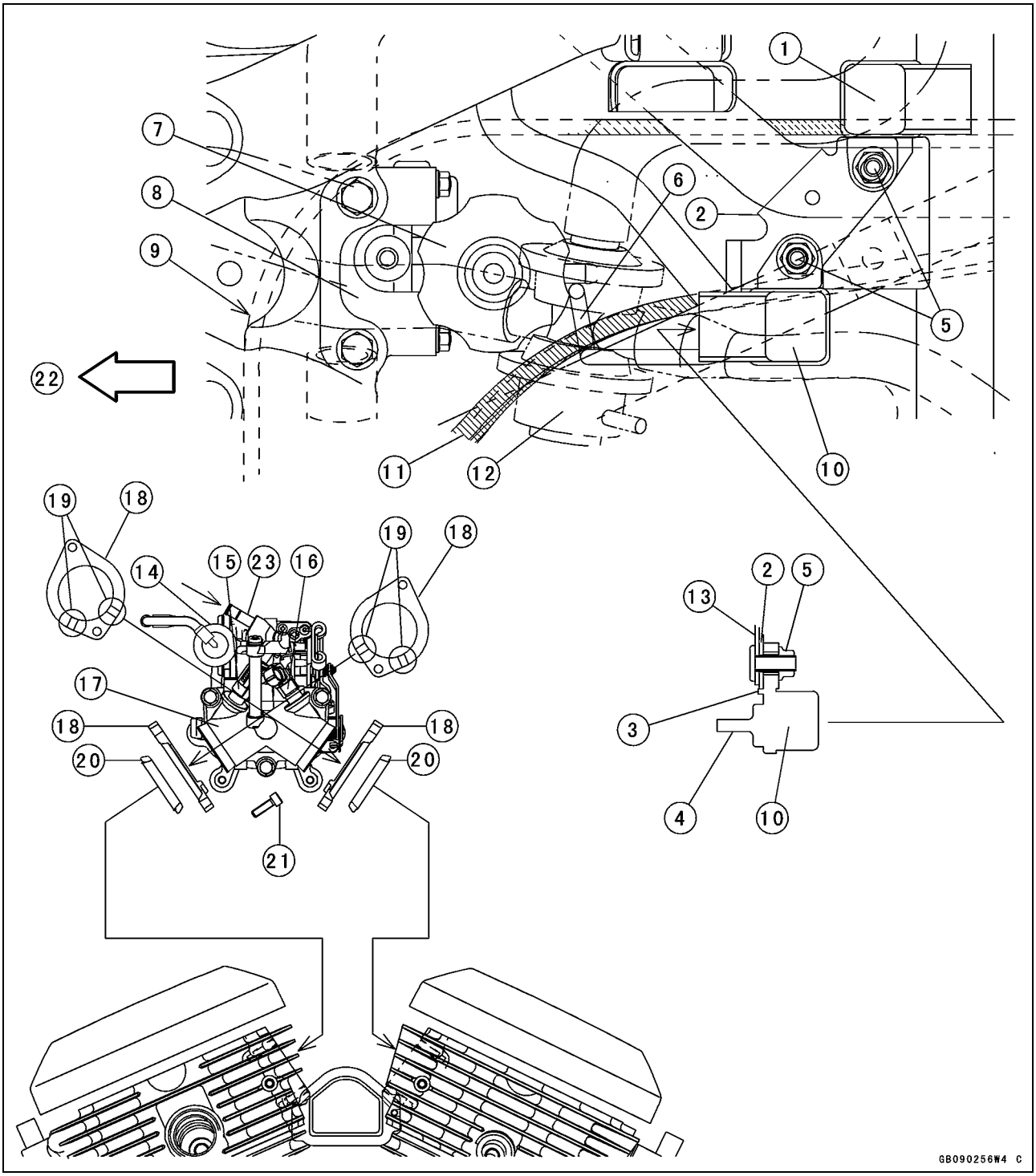

#1: For Front Cylinder
#2: For Rear Cylinder
1. Vacuum Sensor with vacuum hose
2. Sensor Holder
3. Stoppers: The stoppers must not be on the sensor holder [2].
4. Air Inlet of Sensors
5. Sensor Nuts
6. Run throttle cables inside this hook.
7. Radiator Cap
8. Thermostat Housing
9. Choke Cable
10. Atmospheric Pressure Sensor
11. Run the decelerator throttle cable above the accelerator cable from here to the throttle pulley.
12. Vacuum Switch Valve
13. Frame Bracket
14. Pressure Regulator
15. Fuel Injector #1
16. Fuel Injector #2
17. Throttle Assy
18. Manifold Flanges
19. Ribs
20. Seals: The smaller diameter side faces the flange.
21. Inlet Manifold Bolts
22. Front
23. Fuel Inlet of delivery joint

Downloaded from www.vulcanriders-sweden.org

Cable, Wire, and Hose Routing

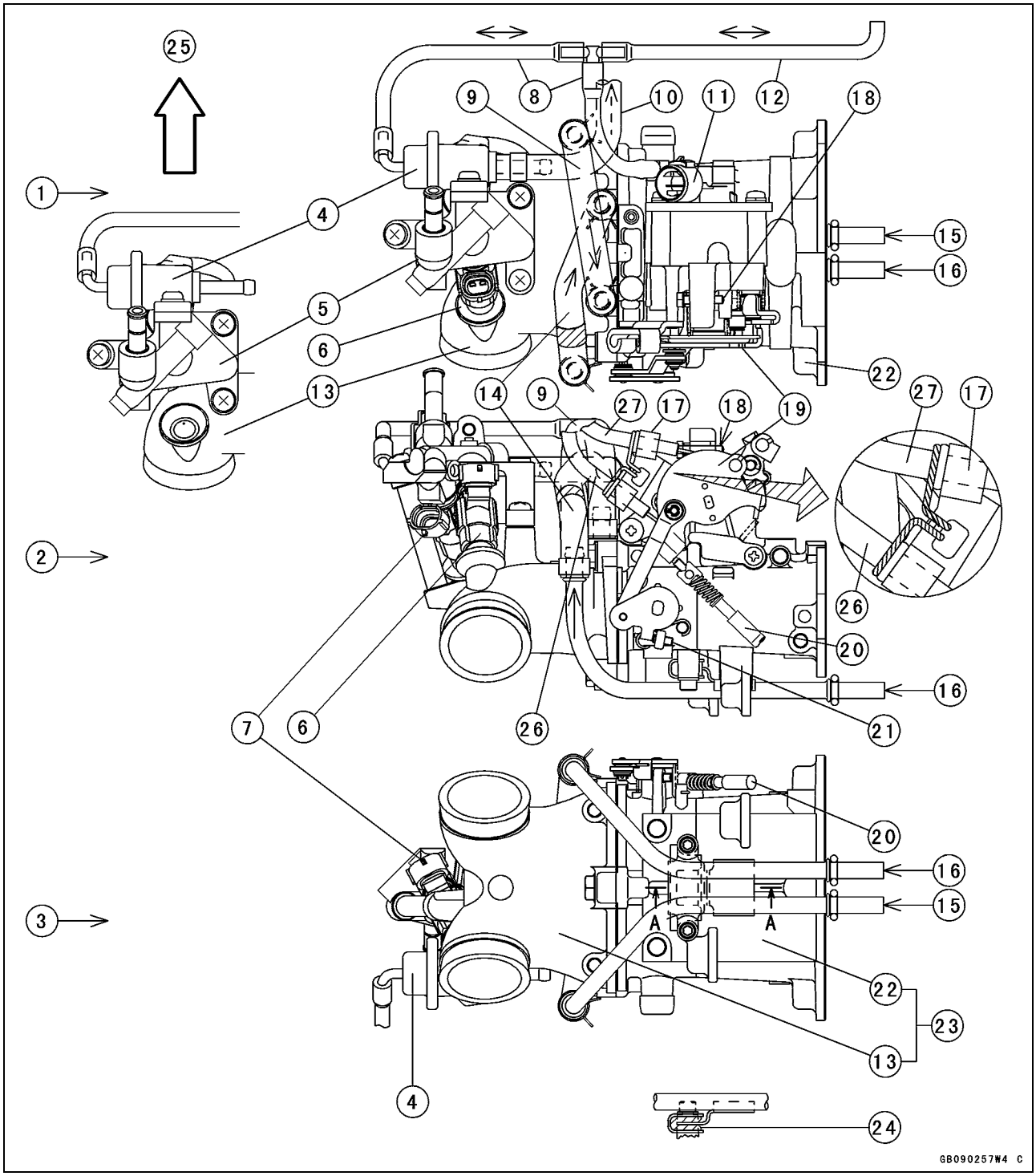

- - >: Fuel Flow
←→: Vacuum Pulsation
→: Bypass Air Flow
#1: For Front Cylinder
#2: For Rear Cylinder
1. Top View
2. Rear View
3. Bottom View
4. Pressure Regulator
5. Delivery Joint
6. Fuel Injector #2
7. Fuel Injector #1
8. Vacuum Hoses from Throttle Body
9. ISC Hose #2 (blue mark)
10. Low Pressure Fuel Hose (to Fuel Tank)
11. Throttle Sensor
12. Vacuum Hose to Vacuum Sensor
13. Inlet Manifold
14. ISC Hose #1 (red mark)
15. ISC Pipe #2
16. ISC Pipe #1
17. Throttle Cable Holder
18. Choke Lever Stop Screw
19. Throttle Pulley
20. Idle Adjusting Screw
21. Throttle Stop Screw
22. Throttle Body
23. Throttle Assy
24. ISC Pipe Damper (section A-A)
25. Front
26. Accelerator Cable
27. Decelerator Cable

Downloaded from www.vulcanriders-sweden.org

Cable, Wire, and Hose Routing

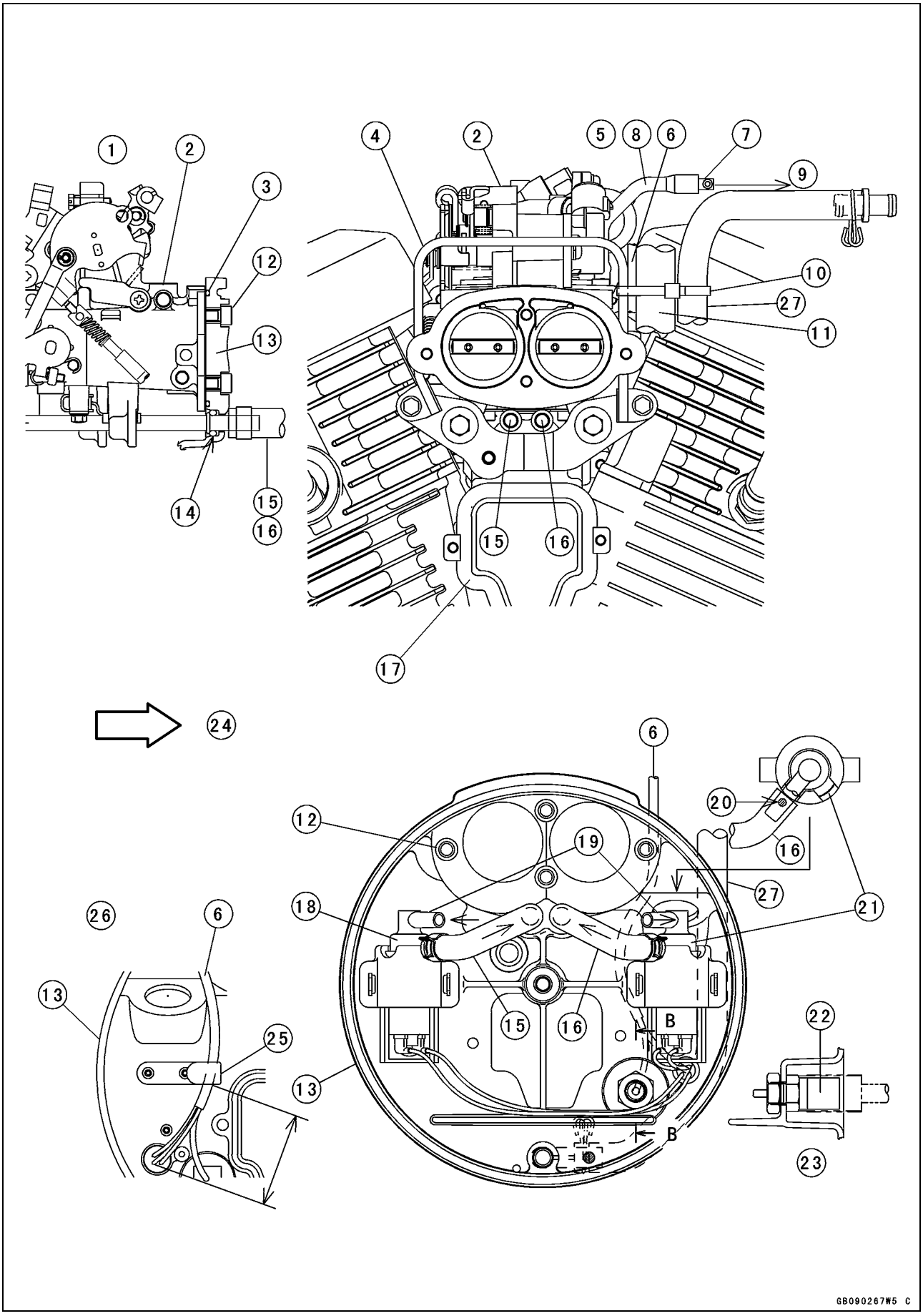

Downloaded from www.vulcanriders-sweden.org

Cable, Wire, and Hose Routing

→: Bypass Air Flow
#1: For Front Cylinder
#2: For Rear Cylinder
1. Rear View
2. Throttle Assy
3. Air Cleaner Base Seal
4. Ignition Coil 2nd Lead Holder
5. Right Side View
6. Harness of Inlet Air Temperature Sensor & ISC Valves
7. T-Joint
8. Vacuum Hose from Throttle Body
9. To Vacuum Sensor and Pressure Regulator
10. Strap (holds [4], [6], [27], and [11])
11. Vacuum Switch Valve Hose
12. Right Air Cleaner Base Bolts
13. Right Air Cleaner Base
14. O-rings
15. ISC Valve Hose #1 (red)
16. ISC Valve Hose #2 (blue)
17. Lower Air Cleaner Duct
18. ISC Valve #1
19. ISC Valve Inlets
20. Blue Mark on Top
21. ISC Valve #2
22. Inlet Air Temperature Sensor
23. Section B-B
24. Front
25. Clamp these leads [6] with a slack as little as possible.
26. Back of Right Air Cleaner Base
27. Oil Reserve Tank Hose

Downloaded from www.vulcanriders-sweden.org

Cable, Wire, and Hose Routing

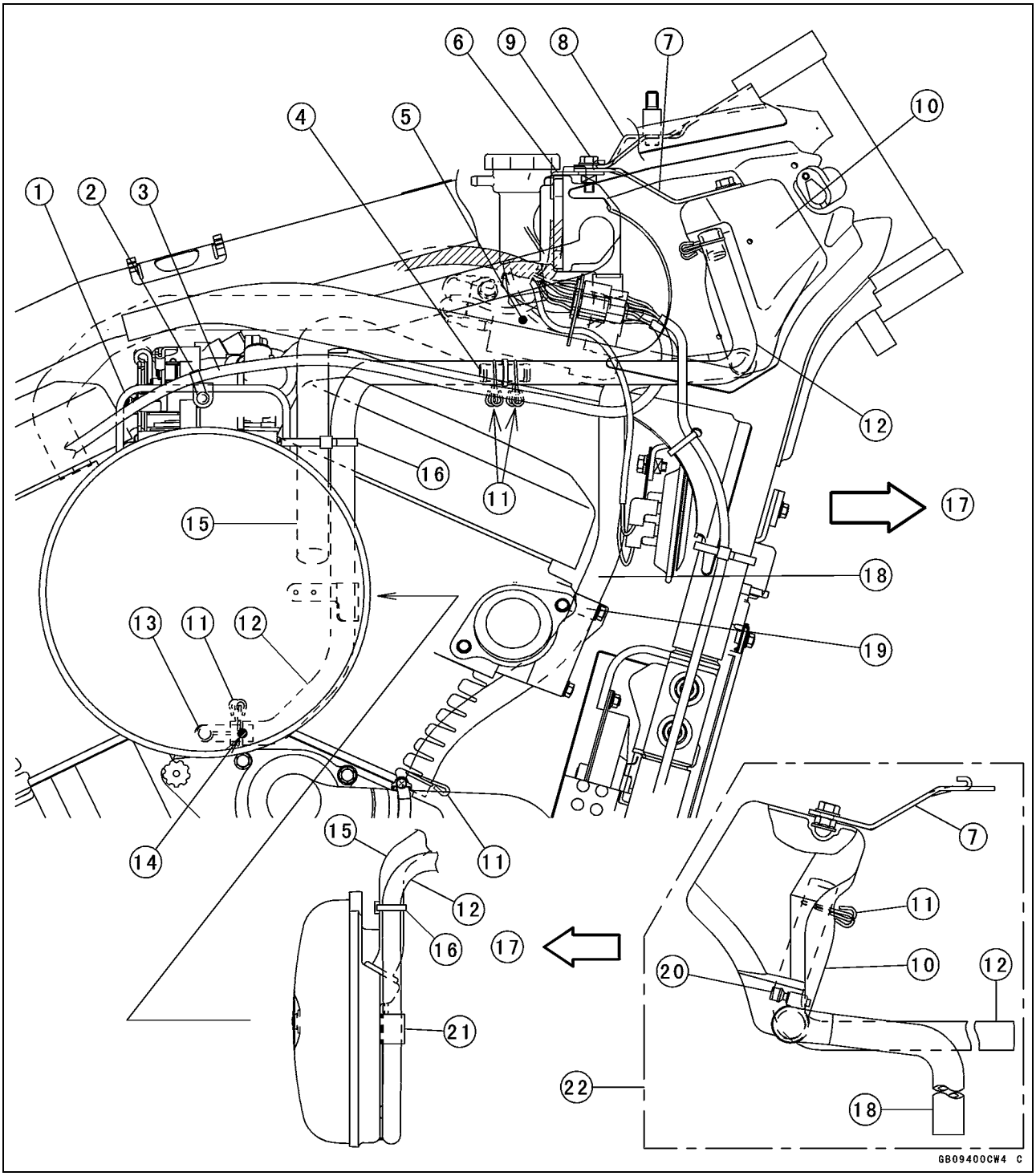

Downloaded from www.vulcanriders-sweden.org

Cable, Wire, and Hose Routing

1. Ignition Coil (Right) Hi-tension Cable Holder
2. Snap-on Strap
3. Ignition Coil (Right) Hi-tension Cable
4. Fitting
5. Right Ignition Coil
6. Thermostat Housing Bracket
7. Reserve Tank Bracket
8. Frame Gusset
9. Tighten the bolt together with the frame gusset, oil reserve tank bracket and thermostat housing bracket.
10. Oil Reserve Tank
11. Clips: Face the tabs as shown.
12. Oil Reserve Tank Hose
13. Elbow Joint
14. Run the oil reserve tank hose along with the air cleaner base and install it after aligning the white paint mark on it to right sideways.
15. Vacuum Switch Valve Hose
16. Band the vacuum switch valve hose, oil reserve tank hose and ISC & inlet air temperature sensor leads to the holder.
17. Front
18. Crankcase Breather Hose
19. Hose Clamp
20. Hose Clamp: place the screw along the tank [10] as shown.
21. Clamp (holds the hose [12].)
22. VN1500-N1 ~ N2 Models

Downloaded from www.vulcanriders-sweden.org

Cable, Wire, and Hose Routing

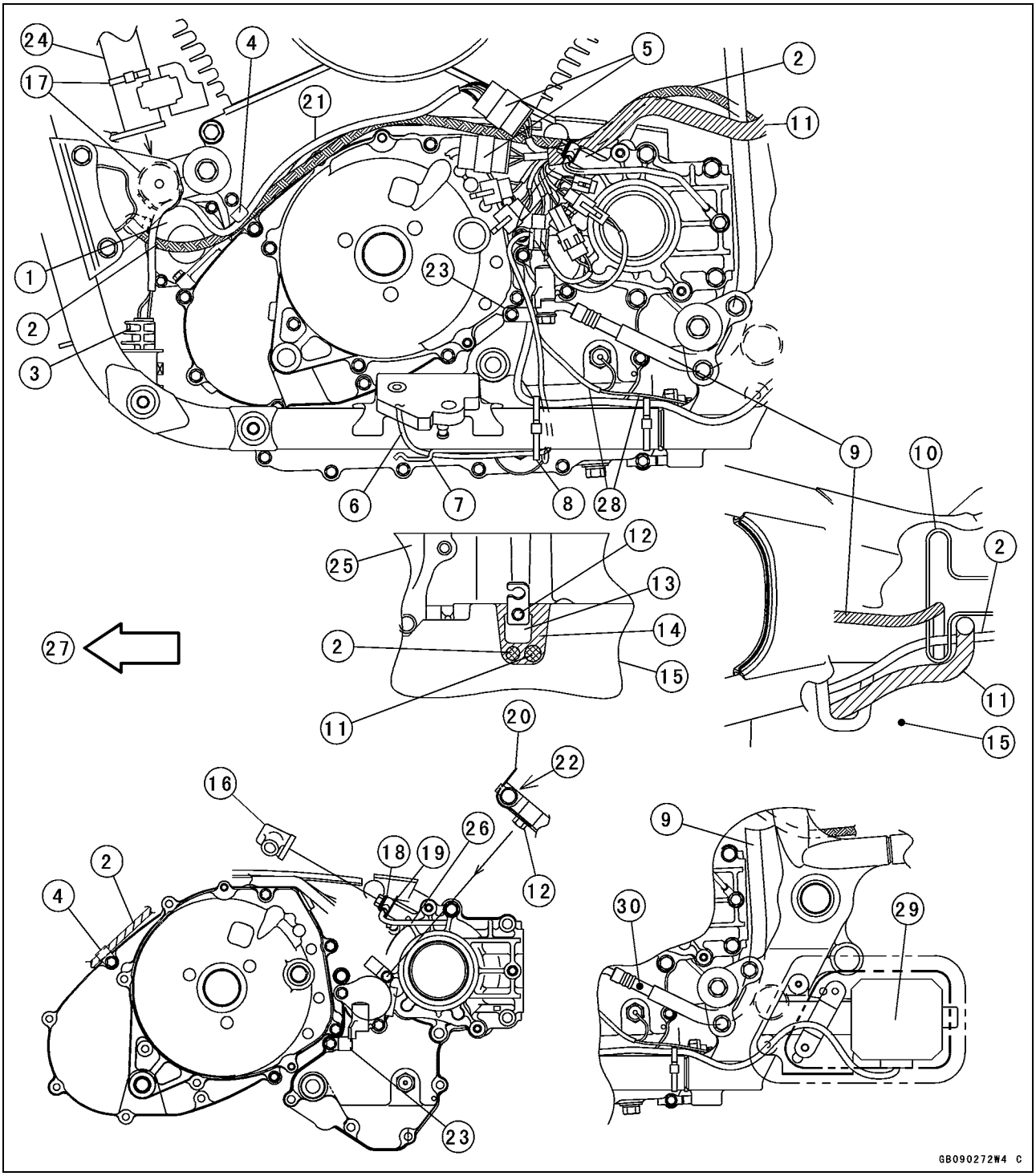

Downloaded from www.vulcanriders-sweden.org

Cable, Wire, and Hose Routing

1. Electric Starter
2. Starter Cable
3. Front Regulator/Rectifier
4. Clamp (Clamp the starter cable and front regulator/rectifier lead.)
5. Regulator/Rectifier Connectors
6. Sidestand Switch Leads
7. Welded Clamp
8. Clamp the leads [6] through the front and rear hooks with a slack as little as possible onto the frame pipe behind the side stand bracket.
9. Clutch Hose
10. Holder
11. Harness (Alternator and Pickup Coil Leads)
12. Bolt
13. Holder
14. Do not run wiring around here.
15. Alternator Outer Cover
16. Rubber Boot
17. Band (harness [21])
18. Upper Washer (ϕ14 × ϕ8.2 mm)
19. Lower Washer (ϕ25 × ϕ8.2 mm)
20. Clamp
21. Harness for [3]
22. Clutch Slave Cylinder Bleed Valve
23. Clamp (holds [6] and [28])
24. Pipe of Engine Mounting Bracket
25. Left Crankcase
26. Engine Oil Pipe
27. Front
28. Oil Pressure Switch/Neutral Switch Leads
29. Rear Regulator/Rectifier
30. White Mark next to the slave cylinder

Downloaded from www.vulcanriders-sweden.org

Cable, Wire, and Hose Routing

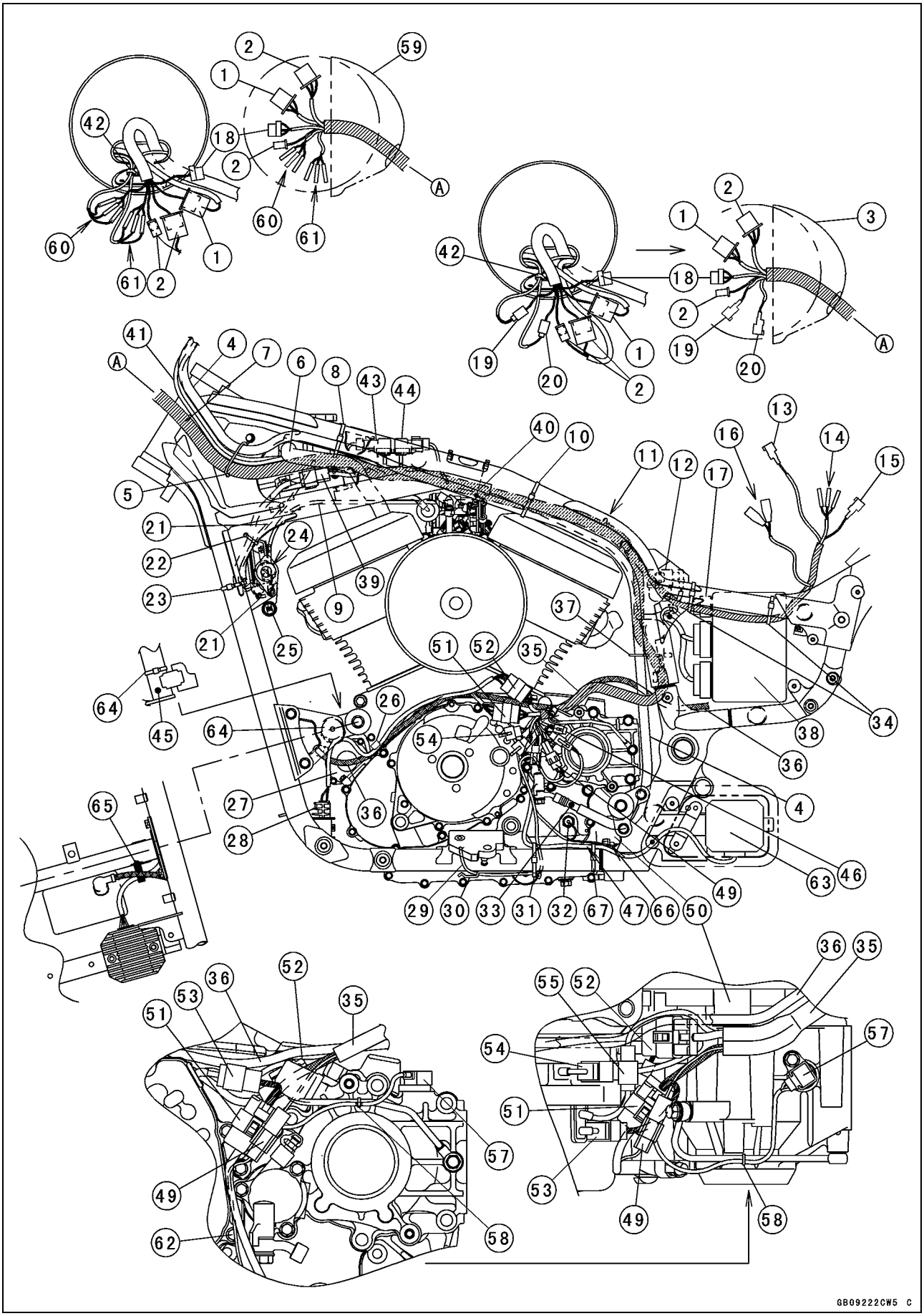

Downloaded from www.vulcanriders-sweden.org

Cable, Wire, and Hose Routing

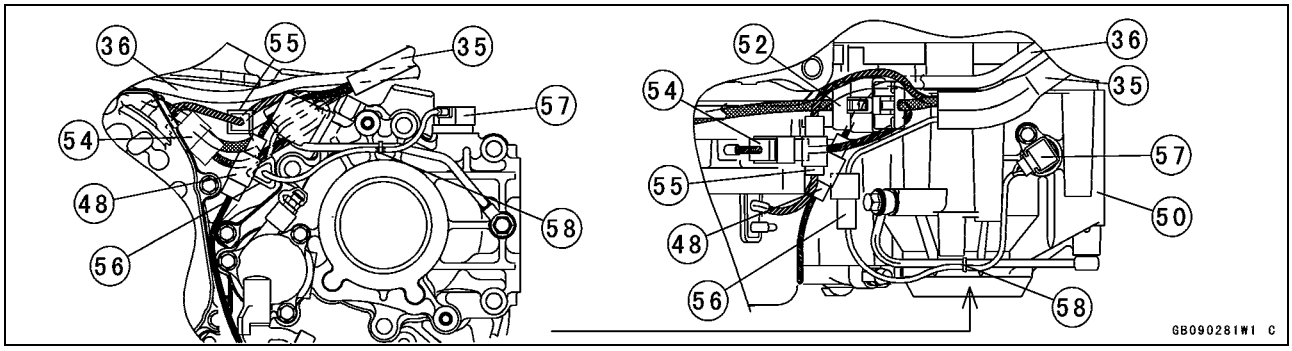

1. Right Handlebar Switch Lead Connector
2. Left Handlebar Switch Lead Connector
3. Headlight Unit (EUR, AU)
4. Clutch Hose (Run it outside of the frame pipe.)
5. Holder (main harness, clutch hose, and throttle cables)
6. Water Hose #1 (front)
7. Main Harness
8. Strap ([4], [7], Run them outside the frame pipe around here.)
9. Choke Cable
10. Strap (vacuum switch valve hose and [4], CAL: canister purge hose-green)
11. Right Frame Hole: Put the main harness clamp into this hole.
12. Vehicle-down Sensor
13. Right Rear Signal Light Snap-in Connector
14. Tail/Brake Light Connectors
15. Left Rear Signal Light Snap-in Connector
16. Accessory Connectors
17. Self-diagnosis Connector Cap
18. Headlight Connector
19. Right Front Turn Signal Light Connectors with Gray Lead (EUR, AU)
20. Left Front Turn Signal Light Connectors with Green Lead (EUR, AU)
21. Horn Leads (Insert the horn terminals so that both leads hang down).
22. Strap (Ignition switch and left horn leads are bound to the frame away from the horn.)
23. Strap (ignition switch lead)
24. Ignition Switch
25. Choke Knob
26. Clamp (Clamp the electric starter cable, regulator/rectifier leads)
27. Electric Starter
28. Front Regulator/Rectifier
29. Sidestand Switch Leads
30. Welded Clamp
31. Strap: Clamp the regulator/rectifier leads with the leads [29] through the front and rear hooks with a slack as little as possible behind the sidestand bracket.
32. Neutral Switch
33. The end of clutch hose with white mark shall be installed to engine side.
34. Straps (rear left main harness, under the frame pipe)
35. Harness (alternator, pickup coil leads, [29] and [47])
36. Electric Starter Cable
37. Holder (clutch hose and others)
38. ECU
39. Ignition Switch Connector
40. White Mark on the Clutch Hose (aligns with the back of the damper)
41. Throttle Cables
42. Clamp (Clamp the front turn signal leads)
43. Atmospheric Pressure Sensor
44. Vacuum Sensor
45. Engine Mounting Bracket
46. Speed Sensor Connector

Downloaded from www.vulcanriders-sweden.org

Cable, Wire, and Hose Routing

47. Regulator/Rectifier Lead
48. Oil Pressure Switch/Neutral Switch Connector
49. Sidestand Switch Connector
50. Front Gear Case
51. Rear Regulator/Rectifier Connector
52. Front Regulator/Rectifier Connector
53. Outside Alternator Connector
54. Inside Alternator Connector
55. Pickup Coil Connector
56. Speed Sensor Connector
57. Speed Sensor
58. Strap
59. Headlight Unit (CA, US)
60. Right Front Turn Signal Light Connectors with Gray Lead (CA, US)
61. Left Front Turn Signal Light Connectors with Green Lead (CA, US)
62. Insert the oil pressure/neutral switch leads, sidestand switch leads, and rear regulator/rectifier leads in order between the alternator cover and the clutch slave cylinder.
63. Rear Regulator/Rectifier
64. Strap (Regulator/Rectifier Lead, Starter Cable) (VN1500-N1)
65. Clamp (Clamp the regulator/Rectifier Lead only) (VN1500-N4 ~)
66. Oil Pressure Switch Leads
67. Clamp the regulator/rectifier lead to the frame pipe.

Downloaded from www.vulcanriders-sweden.org

Cable, Wire, and Hose Routing

Dummy Page

Downloaded from www.vulcanriders-sweden.org

Cable, Wire, and Hose Routing

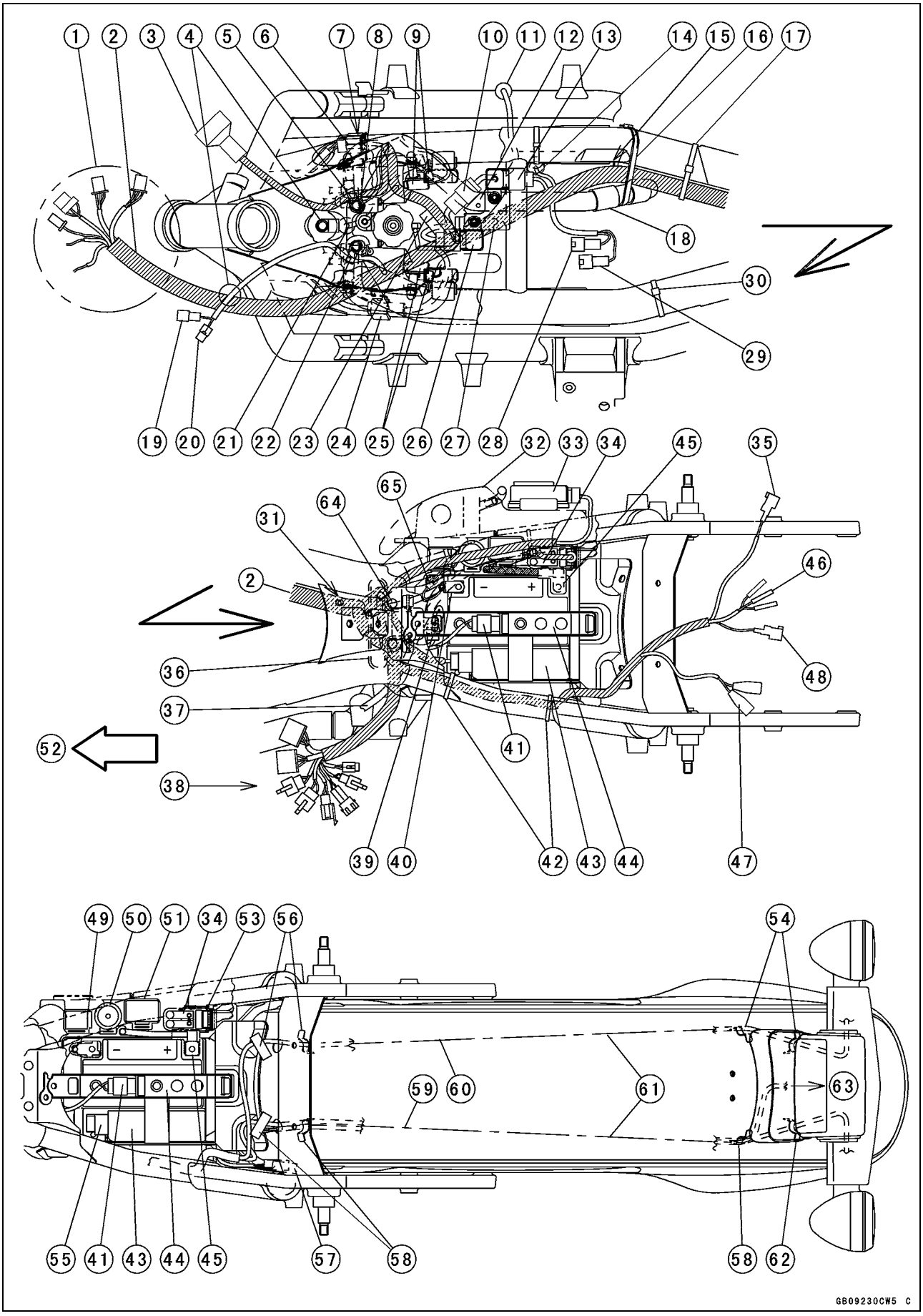

Downloaded from www.vulcanriders-sweden.org

Cable, Wire, and Hose Routing

1. Join the headlight, handlebar switch, and turn signal light leads connectors in the headlight unit.
2. Main Harness
3. Rubber-capped Speedometer Connector
4. Clamp the fuel level sensor and fuel pump leads connector (Put the clamp facing backward on the washer and tighten the clamp with the fuel tank mounting nut.)
5. Clamp the meter harness, tighten it with the ground lead terminal.
6. Rear Brake Light Switch Connector 2P (upper)
7. Radiator Fan Motor Connector 3P (lower)
8. Frame Ground Lead
9. Right Ignition Coil Terminals (upper: R/G lead, lower: BK/G lead)
10. Connector for inlet air temperature and ISC sensors (Run the ISC sensor lead through inside of the vacuum sensor tube.).
11. Grommet of Right Air Cleaner Base
12. Sensor Holder: Clamp the vacuum, atmospheric pressure sensors and tighten them.
13. Vacuum Sensor
14. Throttle Sensor Connector (Connect it to the throttle sensor on the throttle body.)
15. Run the main harness [2] so it does not touch the edge of the frame pipe here.
16. Band (holds [2], [18] and CA-white vacuum hose)
17. Band (Clamp the main harness [2])
18. Rear Water Hose
19. Fuel Level Sensor Connector
20. Fuel Pump 4P Connector (black)
21. Water Temperature Sensor Connector (Connect it under the thermostat housing)
22. Clamp (holds the leads of [19], [20], and accessory connectors).: Face the accessory connectors back and downwards.
23. Rectifier
24. Ignition Switch Connector: Insert the one of the main harness side into the switch holder.
25. Left Ignition Coil Terminals (upper: BK lead, lower: R/G lead)
26. Atmospheric Pressure Sensor
27. White Tape (location mark of main harness): Insert the clamp of the main harness into the frame bracket hole.
28. Fuel Injector #2 Connector
29. Fuel Injector #1 Connector
30. Strap (Clamp the clutch hose, vacuum switch valve hose, and CAL: canister purge hose-green)
31. Insert the pin with the main harness into the right hole of the frame gusset.
32. Coolant Reserve Tank
33. Junction Box
34. Starter Relay
35. Right Rear Turn Signal Light Connector (CA, US), Snap-in Connectors (AU, EUR)
36. Holder
37. Electric Starter Cable
38. Alternator Outer Cover (Join the alternator, pickup coil, neutral switch, oil pressure switch, and sidestand switch connectors in this cover).
39. Vehicle-down Sensor Connector
40. Battery (–) Terminal
41. DFI Main Fuse
42. Straps
43. ECU
44. Battery Holder
45. Battery (+) Terminal
46. Tail/Brake Light Connectors
47. Accessory Lead Connectors: Face them backwards.
48. Left Rear Turn Signal Light Connectors (CA, US), Snap-in Connectors (AU, EUR)
49. Oil Pressure Light Delay Unit
50. DFI Main Relay
51. Turn Signal Control Unit
52. Front
53. Main Fuse 30 A
54. Clamps (Clamp the right rear turn signal light leads)
55. ECU Connectors (The top connector is the self-diagnosis connector)
56. Clamps (Clamp the right rear turn signal lgith leads)
57. Insert the accessory leads between the frame gusset and the rear fender with the accessory connectors backward.
58. Clamp (Clamp the left rear turn signal and tail/brake light leads)
59. Left rear turn signal light and tail/brake light leads are clamped with 6 clamps.
60. Right rear turn signal light are clamped with 6 clamps
61. Run these leads with a slack as little as possible inside the rear fender.
62. Clamp (Clamp the left rear turn signal light leads)
63. Tail/Brake Light
64. Insert the fuel tank breather hose into right side hole of the frame bracket.
65. Battery Ground Lead Terminal

Downloaded from www.vulcanriders-sweden.org

Cable, Wire, and Hose Routing

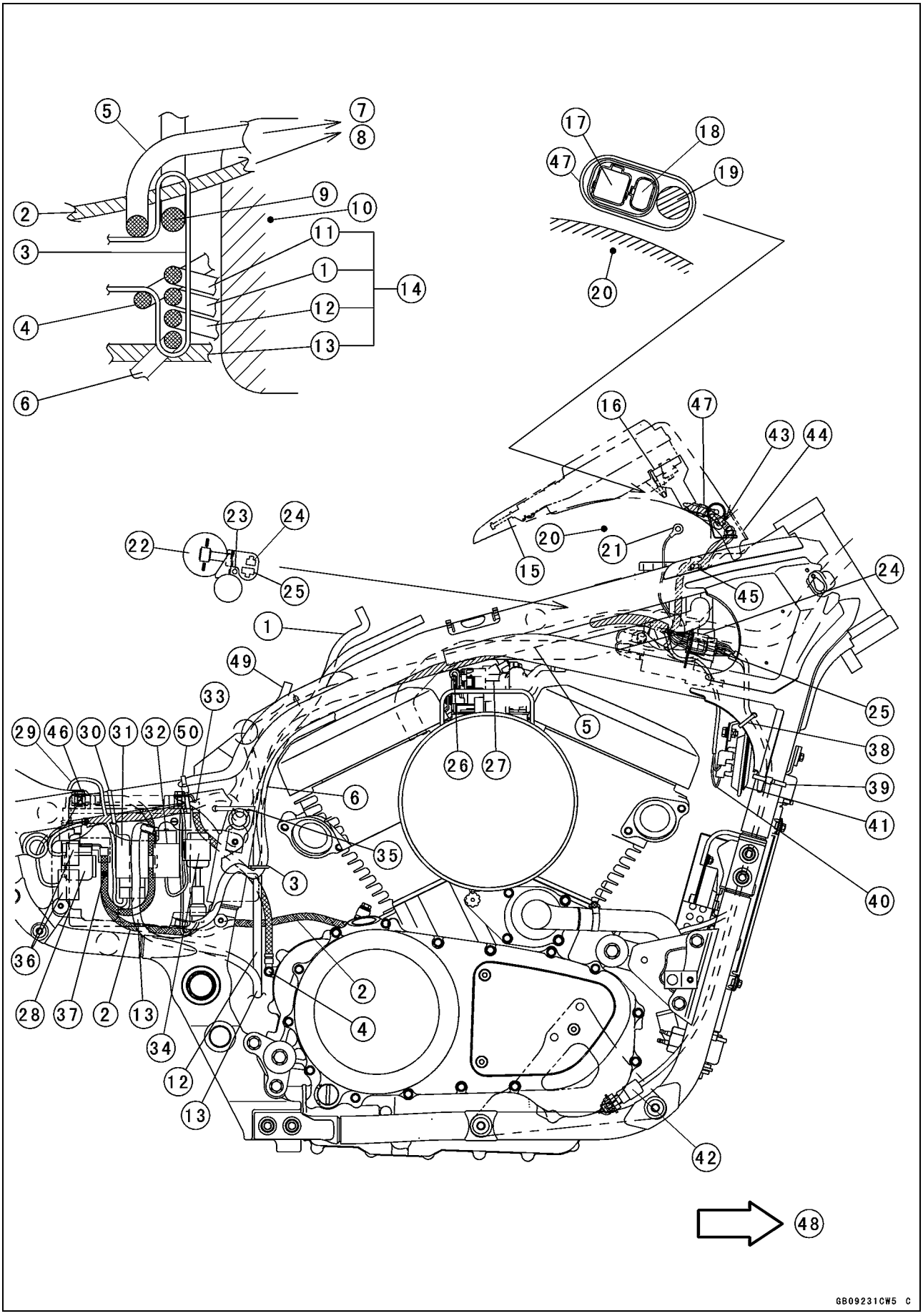

Downloaded from www.vulcanriders-sweden.org

Cable, Wire, and Hose Routing

1. Fuel Tank Filler Drain Hose
2. Electric Starter Motor Lead
3. Holder
4. Engine Ground, or Battery (–) Lead (Run it downward)
5. Main Harness
6. Coolant Reserve Tank Hose (from the thermostat housing to the coolant reserve tank)
7. To the inside of the alternator outer cover
8. Through the alternator outer cover to the starter motor
9. Clutch Hose
10. Crankcase
11. Fuel Tank Breather Hose (except CAL)
12. Fuel Level Sensor Drain Hose
13. Coolant Reserve Tank Overflow Hose
14. Put these hoses into the holder on the bottom of engine.
15. Electronic Meter Unit
16. Rubber-capped Meter Connector
17. Fuel Pump Connector with plastic cap
18. Fuel Level Sensor Connector with Plastic Cap
19. Meter Harness
20. Fuel Tank
21. Frame Ground Lead
22. Right Ignition Coil
23. Right Horn Lead
24. Rear Brake Light Switch Connector
25. Radiator Fan Connector
26. Throttle Pulley
27. Throttle Assy
28. Starter Relay
29. Starter Relay Lead
30. Strap (Hold the harness ahead of the branch to the unit [31].)
31. Turn Signal Control Unit
32. DFI Main Relay
33. Battery (–) Terminal
34. Oil Pressure Warning Light Delay Unit
35. Strap (Hold the upper part of the main harness branch to ECU. Do not hold the hose [6].)
36. Junction Box Connectors
37. Battery (+) Cable
38. Strap (rear brake light switch and radiator fan leads)
39. Strap (rear brake light switch and radiator fan leads): Pull up the rear brake light switch lead a bit tightly and clamp it.
40. Insert the horn terminals so both leads hang down.
41. Horn
42. Rear Brake Light Switch
43. Clamp: Clamp the fuel level sensor and fuel pump leads facing the clamp backward and tighten it with the fuel tank mounting nut.
44. Meter Cover
45. Right Clamp (Clamp the meter harness), Left Clamp (Clamp the fuel level sensor, fuel pump, and accessory connector harness)
46. Battery (+) Terminal
47. Rubber Band
48. Front
49. Fuel Tank Breather Hose (through the right hole)
50. Strap (rear main harness under the frame pipe)

Downloaded from www.vulcanriders-sweden.org

Cable, Wire, and Hose Routing

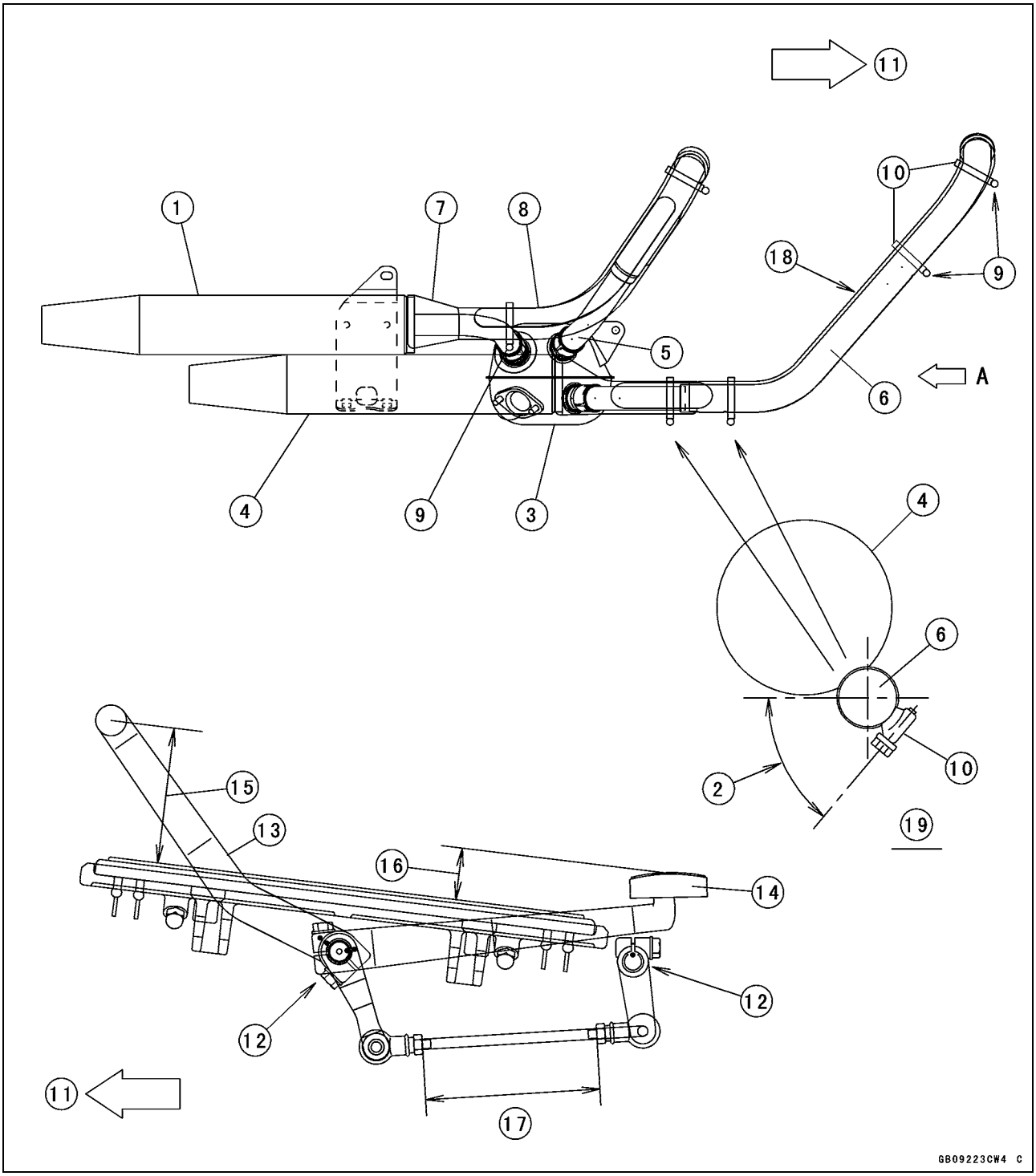

1. Upper Muffler
2. 50°
3. Muffler Chamber
4. Lower Muffler
5. Rear Exhaust Pipe
6. Front Exhaust Pipe
7. Upper Muffler Cover
8. Rear Exhaust Pipe Cover
9. Clamp Screws
10. Clamps
11. Front
12. Align marks.
13. Front Shift Pedal
14. Rear Shift Pedal
15. (80 mm) (3.15 in.)
16. (30 mm) (1.18 in.)
17. 112 ±1 mm (4.41 ±0.04 in.)
18. Front Exhaust Pipe Cover
19. View from A

Downloaded from www.vulcanriders-sweden.org

Cable, Wire, and Hose Routing

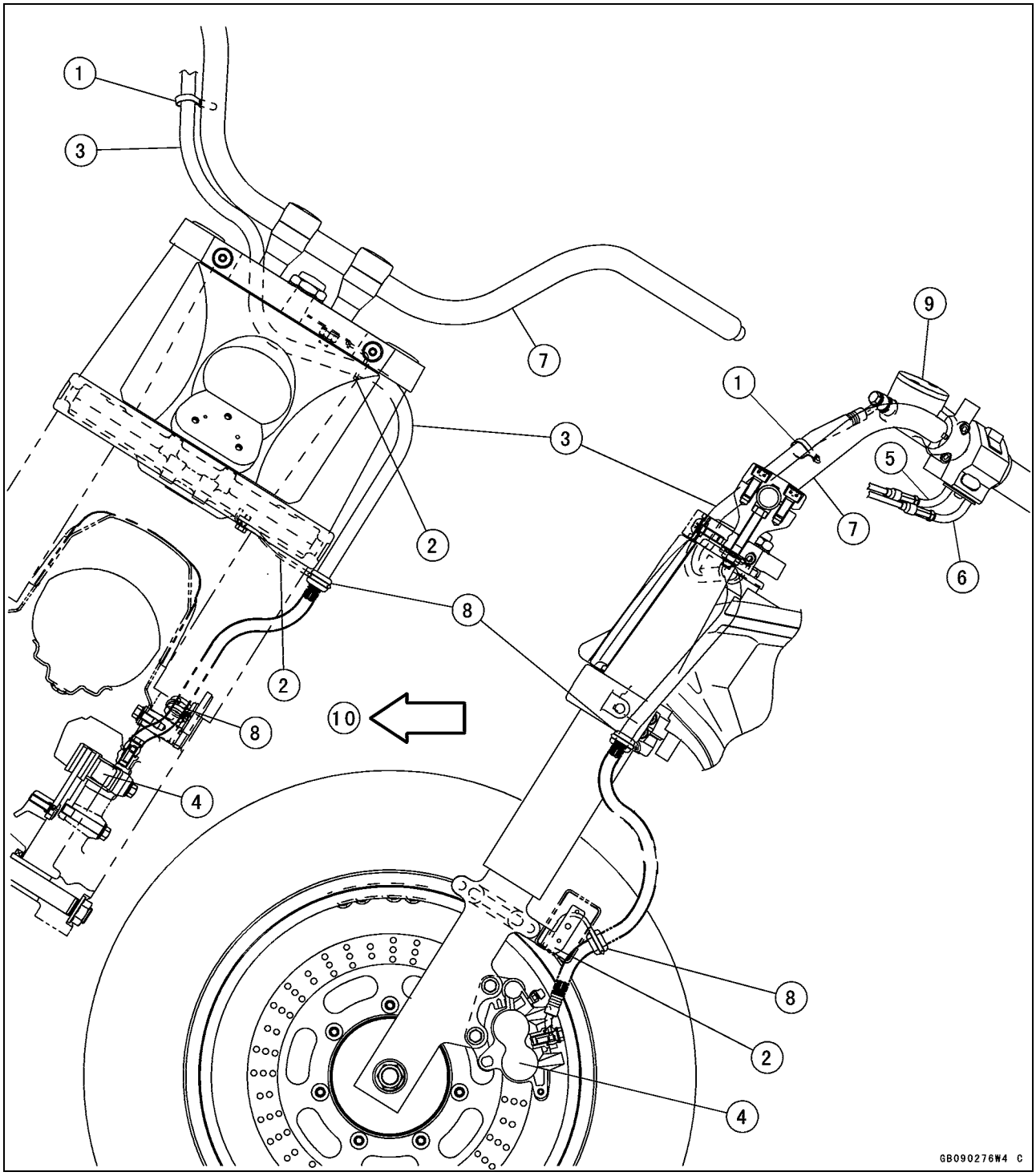

1. Snap-on Strap
2. Front Brake Hose Holders
3. Front Brake Hose
4. Front Brake Caliper
5. Throttle Cable (accelerator)
6. Throttle Cable (decelerator)
7. Handlebar
8. Grommets
9. Front Master Cylinder
10. Front

Downloaded from www.vulcanriders-sweden.org

Cable, Wire, and Hose Routing

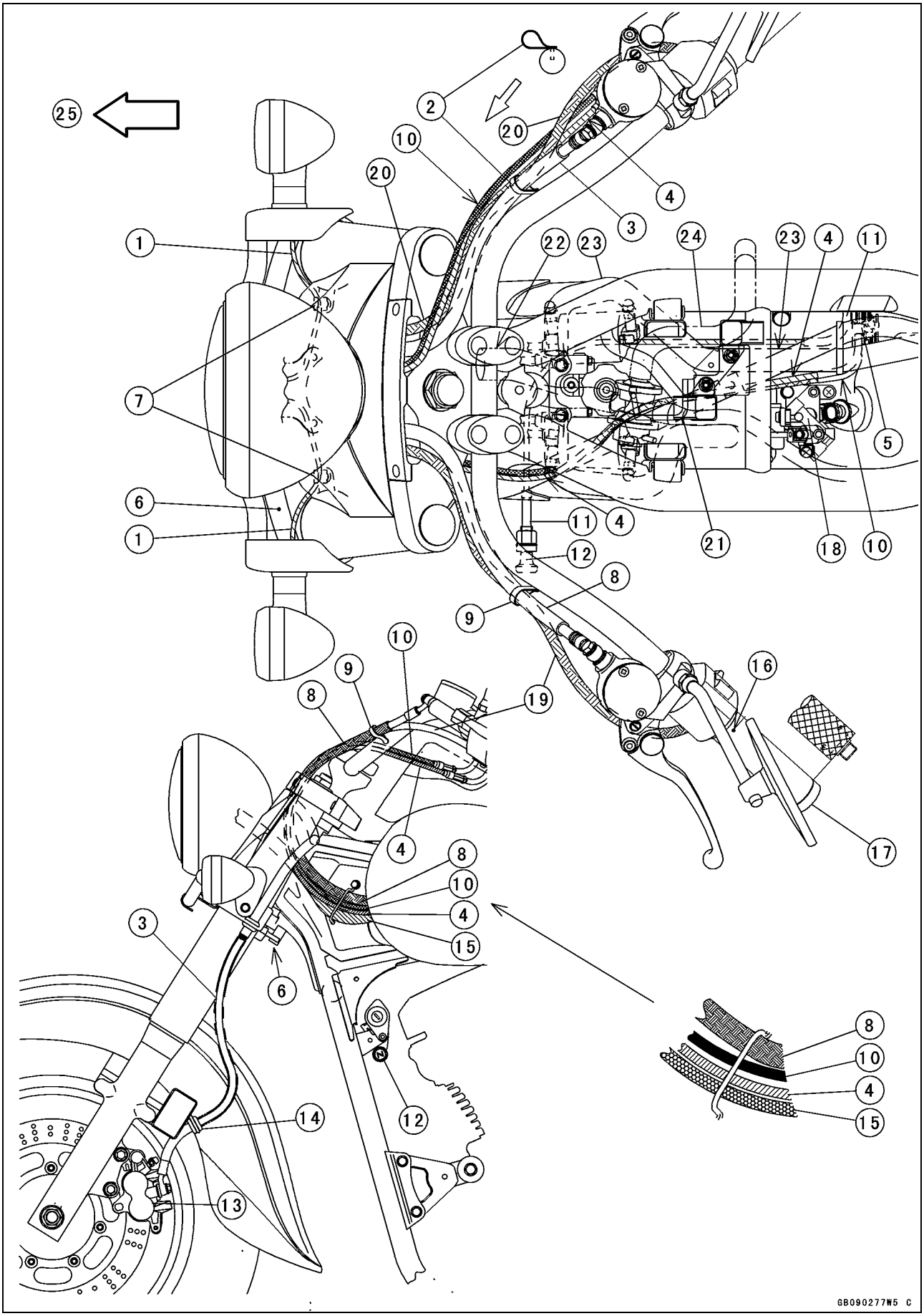

Downloaded from www.vulcanriders-sweden.org

Cable, Wire, and Hose Routing

1. Run the turn signal light lead in front of the upper brake hose [3].
2. Snap-on Strap ([3] and [20] except for throttle cables)
3. Front Brake Hose
4. Throttle Cable (decelerator)
5. Throttle Pulley
6. Lower Fork Holder or Steering Stem
7. Clamp (holds the turn signal leads [1]): Tighten the clamp along with the upper fork cover.
8. Clutch Hose
9. Snap-on Strap (holds [8] and [19])
10. Throttle Cable (accelerator)
11. Choke Cable: Run the choke cable above the water hose, and the cable comes from upper side of the vacuum switch valve and through out the left side of it and under the water hose for rear cylinder.
12. Choke Knob
13. Front Caliper
14. Grommet (holds [3])
15. Main Harness
16. Punch Mark: Insert the grip until its edge aligns with the mark.
17. Apply adhesive to the grip end cap and screw it in counterclockwise to the grip end fully.
18. Throttle Assy
19. Left Handlebar Switch Leads
20. Right Handlebar Switch Leads
21. Clamp: Run the cables [4], [10] inside the hook.
22. Water Hose
23. Water Hose #2 (for rear cylinder)
24. Vacuum Switch Valve Hose
25. Front

Downloaded from www.vulcanriders-sweden.org

Cable, Wire, and Hose Routing

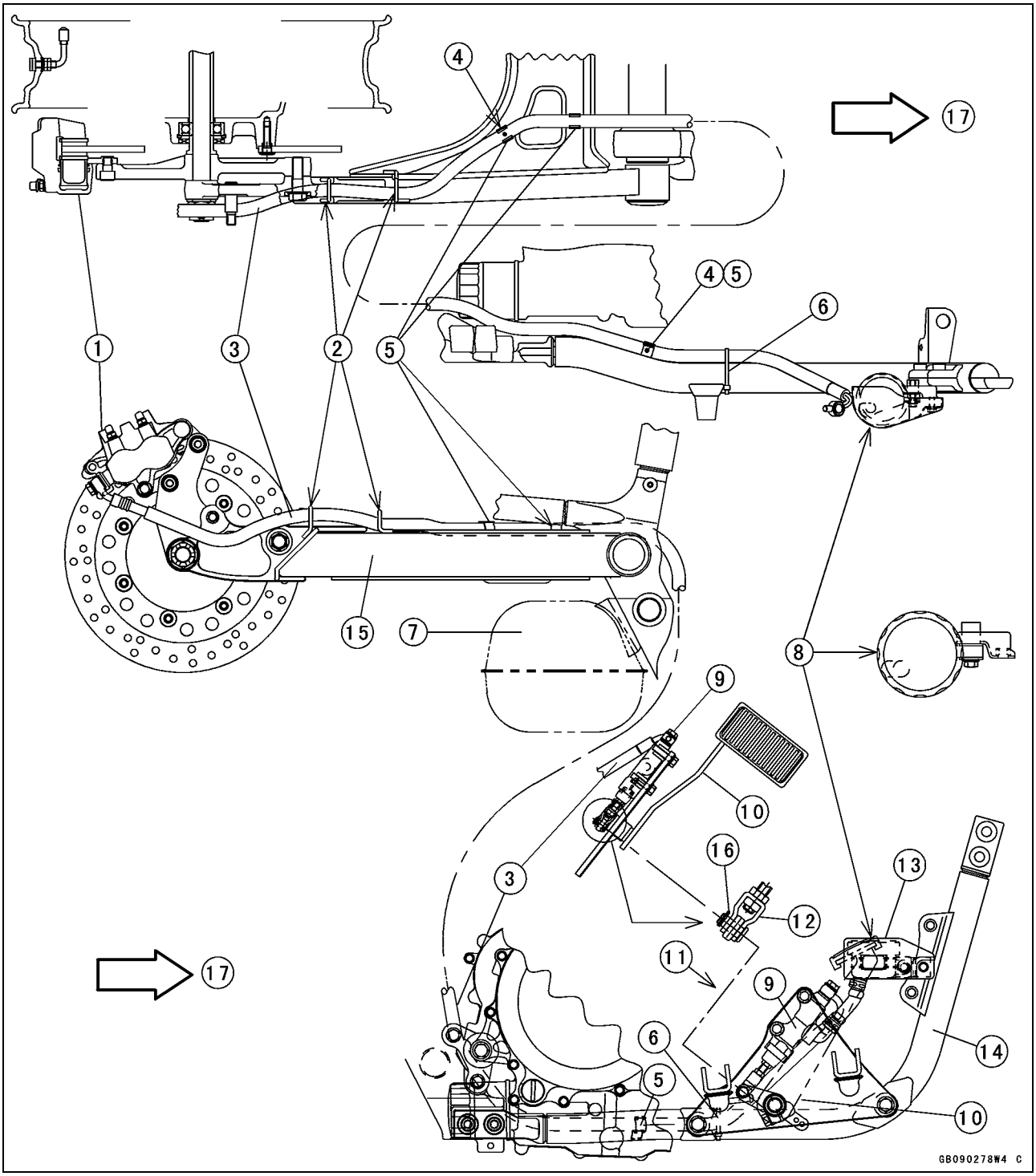

1. Rear Brake Caliper
2. Brake Hose Holders
3. Rear Brake Hose
4. Brake Hose White Marks (Position here.)
5. Clamps
6. Straps
7. Chamber
8. Rear Brake Reservoir
9. Rear Master Cylinder
10. Brake Pedal
11. View
12. Clevis
13. Rear Brake Reservoir Cover
14. Downtube
15. Swingarm
16. Cotter Pin
17. Front

Downloaded from www.vulcanriders-sweden.org

Cable, Wire, and Hose Routing

Evaporative Emission Control System (California Model)

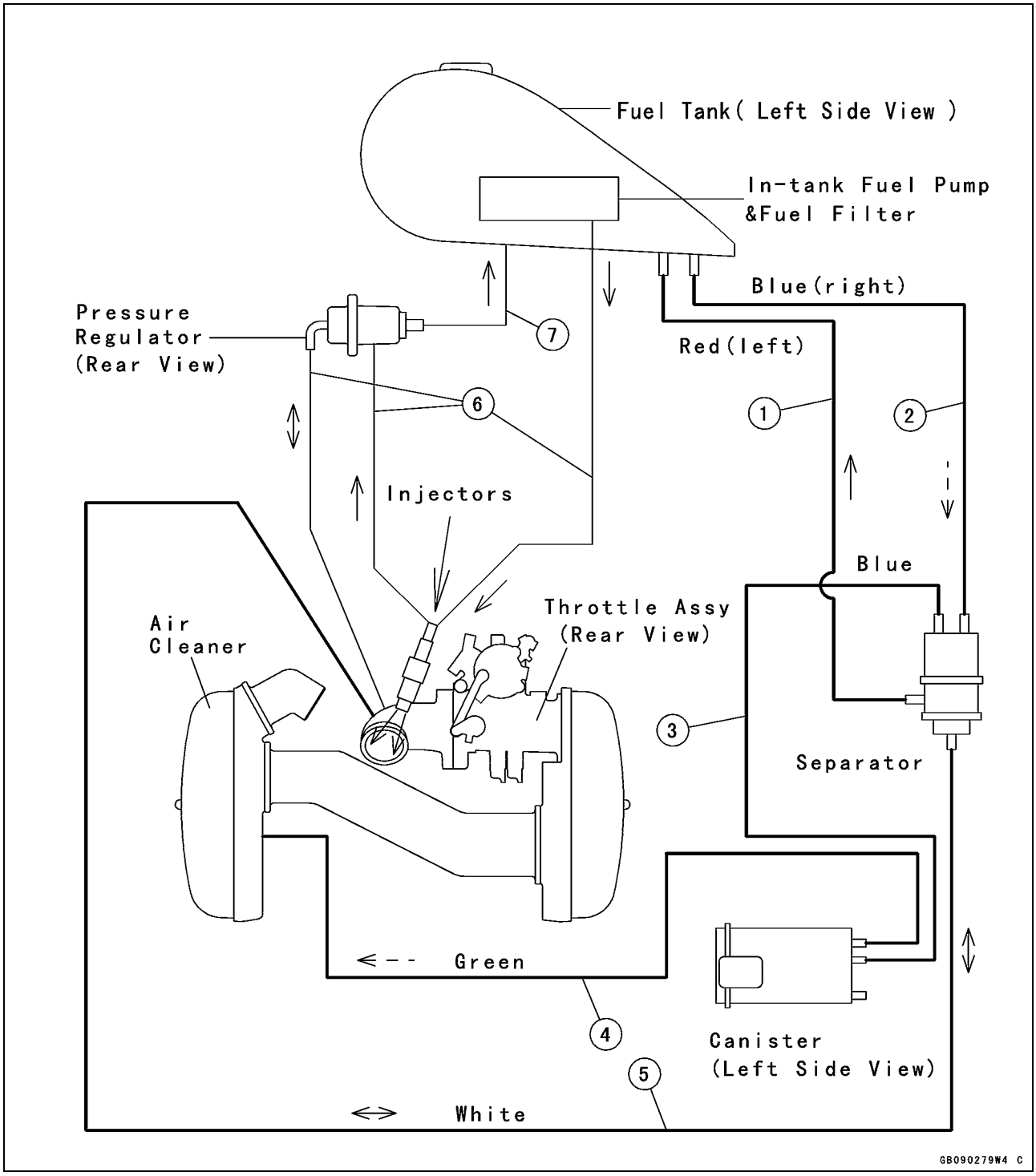

- - >: Vapor Flow
→: Fuel Flow
←→: Vacuum Pulsation

1. Fuel Return Hose
2. Fuel Tank Breather Hose
3. Separator Breather Hose
4. Canister Purge Hose
5. Vacuum Hose
6. High Pressure Fuel Hoses (supply fuel)
7. Low Pressure Fuel Hose (return fuel)

Downloaded from www.vulcanriders-sweden.org

Cable, Wire, and Hose Routing

Evaporative Emission Control System (California Model)

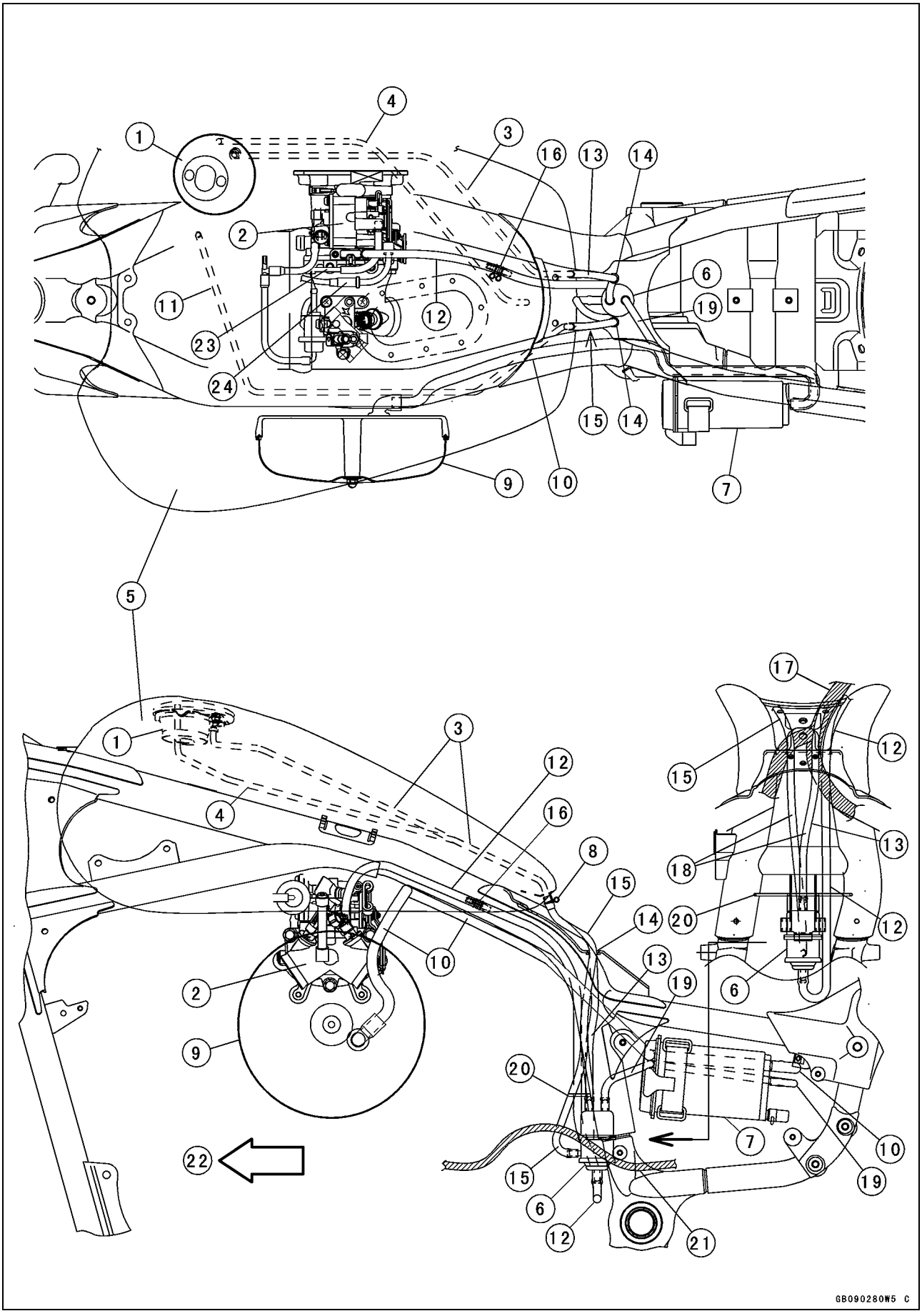

Downloaded from www.vulcanriders-sweden.org

Cable, Wire, and Hose Routing

Evaporative Emission Control System (California Model)

1. Fuel Tank Filler
2. Throttle Assy
3. Fuel Tank Breather Pipe
4. Filler Drain Pipe
5. Fuel Tank
6. Separator
7. Canister
8. Clips for [13] and [15]
9. Left Air Cleaner Housing
10. Canister Purge Hose (green)
11. Fuel Return Pipe
12. Vacuum Hose (white): Run the hose to the right side of [6] through the holder [20].
13. Fuel Tank Breather Hose (blue, right)
14. Gusset Holes for [13] and [15]
15. Fuel Return Hose (red, left)
16. Fitting
17. Main Harness (rear view)
18. Run the hoses [13] and [15] between the branch of [17].
19. Separator Breather Hose (blue)
20. Holder
21. Electric Starter Cable: Run the cable to the left side of [6].
22. Front
23. Choke Cable
24. Throttle Cables

Downloaded from www.vulcanriders-sweden.org

Cable, Wire, and Hose Routing

Evaporative Emission Control System (California Model)

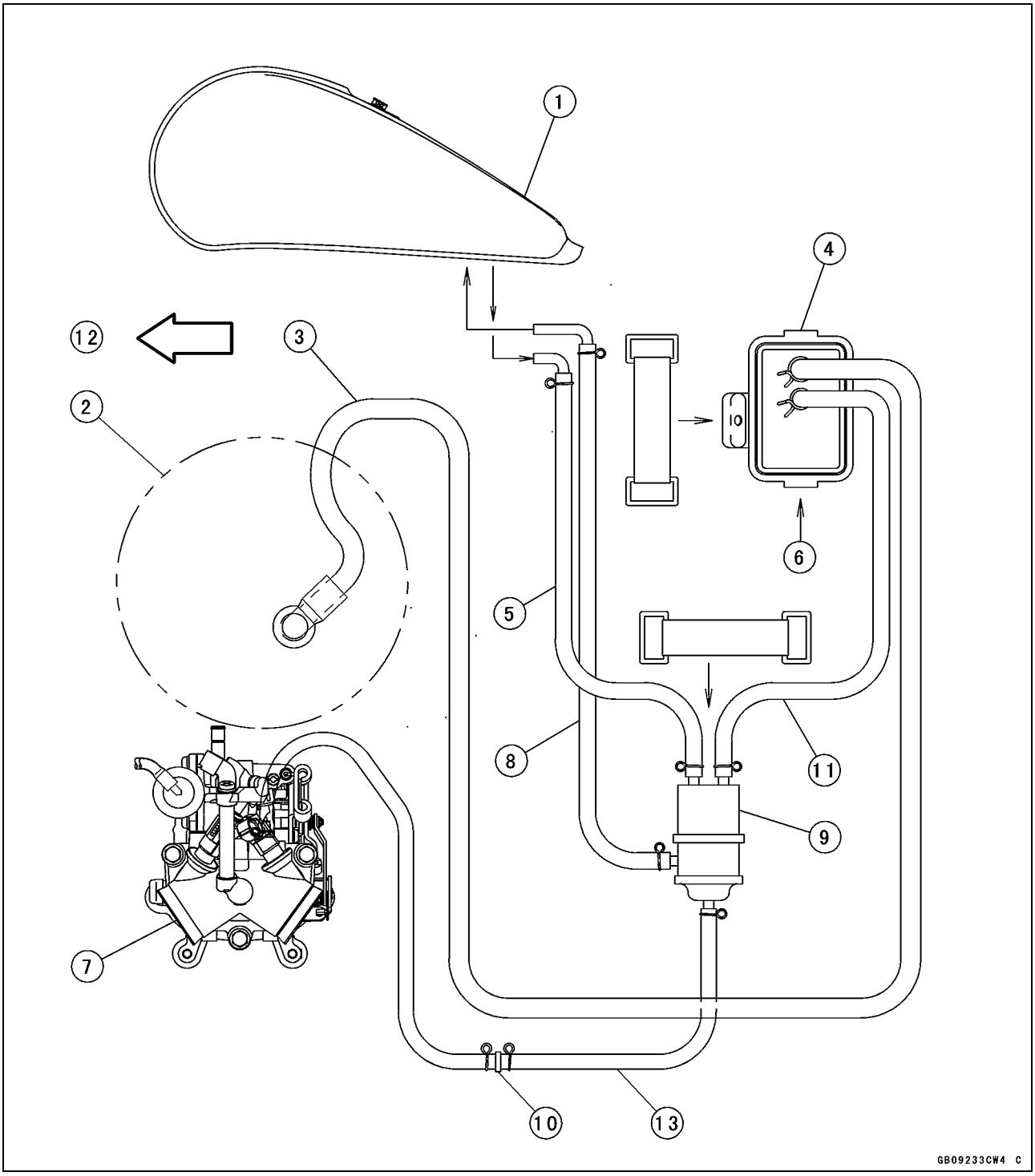

1. Fuel Tank
2. Left Air Cleaner Base
3. Canister Purge Hose (Green, CAL)
4. Canister (CAL)
5. Fuel Breather Hose (right, blue)
6. Rear View
7. Throttle Assy
8. Fuel Tank Return Hose (red, left)
9. Separator
10. Fitting
11. Separator Breather Hose (blue)
12. Front
13. Vacuum Hose (white)

Downloaded from www.vulcanriders-sweden.org

Fuel System (DFI)

Table of Contents

Specifications 2-3
DFI Parts Location 2-6
Exploded View 2-10
DFI System 2-14
DFI Wiring Diagram 2-16
DFI Servicing Precautions 2-18
Throttle Grip and Cables 2-21
  Throttle Grip Play Inspection 2-21
  Throttle Grip Free Play Adjustment 2-21
  Choke Knob Operation 2-22
  Choke Cable Free Play Inspection 2-22
  Cable Removal/Installation 2-22
  Cable Lubrication and Inspection. 2-22
Throttle Assy 2-23
  Idle Speed Inspection 2-23
  Idle Speed Adjustment 2-23
  Throttle Bore Cleaning 2-23
  High Altitude Performance Adjustment 2-24
  Throttle Assy Removal 2-24
  Throttle Assy Installation 2-27
  Throttle Assy Disassembly/Assembly 2-29
Air Cleaner 2-31
  Element Removal 2-31
  Element Cleaning and Inspection 2-31
  Left Air Cleaner Housing Removal/Installation 2-31
  Right Air Cleaner Housing Removal 2-32
  Right Air Cleaner Housing Installation 2-33
  Lower Air Cleaner Duct Removal. 2-34
Fuel Tank 2-35
  Fuel Tank Removal 2-35
  Fuel Tank Installation 2-38
  Fuel Tank and Cap Inspection 2-40
  Fuel Tank Cleaning 2-40
  Return Fuel Check Valve Inspection 2-40
Evaporative Emission Control System 2-42
  Parts Removal/Installation 2-42
  Canister Inspection (Periodic Inspection) 2-42
  Hose Inspection (Periodic Inspection) 2-42
  Separator Inspection (Periodic Inspection) 2-43
  Separator Operation Test 2-43
Troubleshooting the DFI System 2-45
  Outline 2-45
  Problem Chart 2-51
  Inquiries to Rider 2-53
ECU 2-56
  ECU Removal 2-56
  ECU Installation 2-56
  ECU Power Supply Inspection 2-57
DFI Power Source 2-59
  DFI Fuse Removal 2-59
  DFI Fuse Installation 2-59
  DFI Fuse Inspection 2-59
  DFI Main Relay Removal 2-59
  DFI Main Relay Inspection 2-60
FI Indicator LED Light 2-61
  LED Light Inspection 2-62
ISC Valves 2-63
  Removal/Installation 2-64
  Power Source Voltage Inspection 2-64
  Output Voltage Inspection 2-65
  Resistance Inspection 2-66
Fuel Line 2-68
  Fuel Pressure Inspection 2-68
  Pressure Regulator Removal 2-70
  Fuel Flow Rate Inspection 2-70
Self-Diagnosis 2-72
  Self-diagnosis Function 2-72
  Self-diagnosis Procedures 2-72
  How to Read Fault Codes 2-74
  How to Erase Fault Codes 2-75
  Fault Code Table 2-75
  Backups 2-76
Throttle Sensor (Fault Code 11) 2-78
  Throttle Sensor Removal/Adjustment 2-78
  Input Voltage Inspection 2-78
  Output Voltage Inspection 2-79
  Resistance Inspection 2-81
Vacuum Sensor (Fault Code 12) 2-82

Downloaded from www.vulcanriders-sweden.org

Removal 2-82
Installation 2-82
Input Voltage Inspection 2-82
Output Voltage Inspection 2-83
Inlet Air Temperature Sensor (Fault Code 13) 2-88
Removal/Installation 2-88
Output Voltage Inspection 2-88
Sensor Resistance Inspection 2-89
Water Temperature Sensor (Fault Code 14) 2-90
Removal/Installation 2-90
Output Voltage Inspection 2-90
Sensor Resistance Inspection 2-92
Atmospheric Pressure Sensor (Fault Code 15) 2-93
Removal 2-93
Installation 2-93
Input Voltage Inspection 2-93
Output Voltage Inspection 2-94
Pickup Coils (#1, #2: Fault Code 21, 22) 2-98
Pickup Coil Removal/Installation 2-98
Pickup Coil Inspection 2-98
Vehicle-down Sensor (Fault Code 31) 2-99
Removal 2-99
Installation 2-100
Inspection 2-100
Fuel Injectors (#1, #2: Fault Code 41, 42) 2-103
Injector Removal 2-103
Injector Installation 2-104
Power Source Voltage Inspection 2-106
Output Voltage Inspection 2-107
Audible Inspection 2-108
Injector Signal Test 2-109
Injector Resistance Inspection 2-109
Injector Unit Test 2-110
In-tank Fuel Pump (Fault Code 45) ... 2-112
Fuel Pump Removal 2-112
Pump Screen Cleaning 2-112
Fuel Filter Cleaning 2-113
Fuel Pump Installation 2-113
Operation Inspection 2-114
Operating Voltage Inspection 2-114
Power Source Voltage Inspection 2-115
Ignition Coils (#1, #2: Fault Code 51, 52) 2-118
Removal/Installation 2-118
Input Voltage Inspection 2-118

Downloaded from www.vulcanriders-sweden.org

Specifications

Item	Standard
Throttle Grip Free Play	2 ~ 3 mm
Air Cleaner Element	Paper filter
DFI (Digital Fuel Injection) System	
Make	Mitsubishi Electric
Idle Speed	950 ±50 r/min (rpm)
Throttle Assy:	
Type × Bore	Two barrel type × ϕ36 mm (1.42 in.)
ECU (Electronic Control Unit):	
Type	Digital memory type, with built in IC igniter, sealed with resin
Usable Engine Speed	100 ~ 5 950 r/min (rpm)
ISC Valves:	(Idle Speed Control Valve, or Fast Idle Solenoid Valve)
Maximum Air Flow Rate	75 ±7 L/min (79.3 ±7.4 US gt/min)
Solenoid Resistance	13.6 ~ 20.4 Ω
In-tank Fuel Filter:	
Filtration Area	More than 200 cm²
Rated Flow	1.0 L/min (1.1 US gt/min)
Fuel Pressure (High Pressure Line):	
Right After Ignition Switch ON	310 kPa (3.2 kgf/cm², 46 psi) with fuel pump running
3 Second or More After Ignition Switch ON	280 kPa (2.9 kgf/cm², 41 psi) with fuel pump stopped
With Engine Idling	260 kPa (2.7 kgf/cm², 38 psi) with fuel pump running
With Engine Running at Full Throttle	260 ~ 280 kPa (2.7 ~ 2.9 kgf/cm², 38 ~ 41 psi) with fuel pump running
Pressure Regulator:	
Regulated Fuel Pressure	294 ±4.9 kPa (3.00 ±0.05 kgf/cm², 43 ±0.73 psi)
Throttle Sensor:	Non-adjustable, and non-removable
Input Voltage	4.75 ~ 5.25 V DC between BL/W and BR/BK leads
Output Voltage at Idle Throttle Opening	0.584 ~ 0.604 V DC between Y/W and BR/BK leads
Output Voltage at Full Throttle Opening	4.29 ~ 4.59 V DC between Y/W and BR/BK leads
Resistance	4 ~ 6 kΩ between BL/W and BR/BK leads
Atmospheric Pressure Sensor or Vacuum Sensor:	
Input Voltage	4.75 ~ 5.25 V DC
Output Voltage	3.74 ~ 4.26 V DC at standard atmospheric pressure
Inlet Air Temperature Sensor:	
Resistance	5.4 ~ 6.6 kΩ at 0°C (32°F) 2.26 ~ 2.86 kΩ at 20°C (68°F) 0.29 ~ 0.39 kΩ at 80°C (176°F)
Water Temperature Sensor:	
Resistance	2.162 ~ 3.112 kΩ at 20°C (68°F) 0.785 ~ 1.049 kΩ at 50°C (122°F) 0.207 ~ 0.253 kΩ at 100°C (212°F)
Vehicle-down Sensor:	
Detection Method	Magnetic flux detection method
Detection Angle	More than 45° ±5° for each bank

Downloaded from www.vulcanriders-sweden.org

2-4 FUEL SYSTEM (DFI)

Specifications

Item	Standard
Detection Time	Within 0.5 ~ 1.0 second
Fuel Injectors:	
Type	INP-786
Injection Timing	60° BTDC
Static Injection Quantity	273.1 ~ 289.4 mL/min (9.23 ~ 9.78 US oz/min)
Nozzle Type × Diameter	Two spray type with 4 holes × 0.3 mm (0.012 in.)
Resistance	14.2 ~ 14.8 Ω
Fuel Pump:	
Type	In-tank pump (friction pump)
Discharge	75 mL (2.54 US oz) or more for 3 seconds (90 L (23.8 US oz) or more/h) with the filter installed at 12 V × atmospheric pressure

Special Tools - Oil Pressure Gauge: 57001-125
Hand Tester: 57001-1394
Filler Cap Driver: 57001-1454
Needle Adapter Set: 57001-1457
Fuel Pressure Gauge Adapter: 57001-1593
Fuel Hose: 57001-1607
Fork Oil Level Gauge: 57001-1290

Sealant - Kawasaki Bond (Silicone Sealant): 56019-120

Downloaded from www.vulcanriders-sweden.org

Specifications

Dummy Page

Downloaded from www.vulcanriders-sweden.org

DFI Parts Location

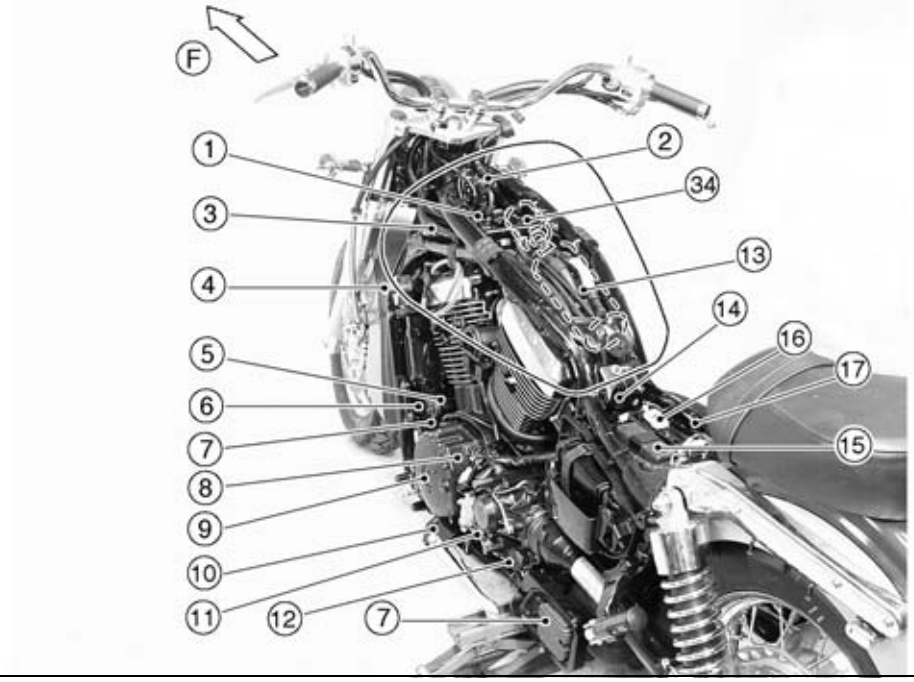

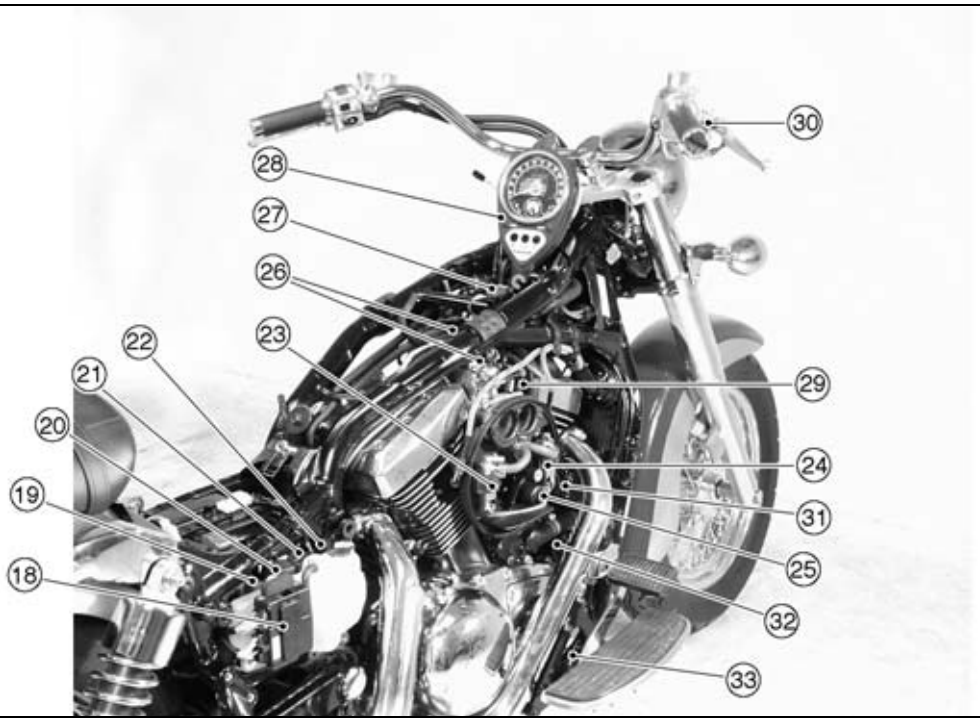

Downloaded from www.vulcanriders-sweden.org

DFI Parts Location

1. Atmospheric Pressure Sensor (DFI)
2. Water Temperature Sensor (DFI)
3. Ignition Coils
4. Ignition Switch
5. Starter Motor
6. Water Temperature Switch
7. Regulator/Rectifiers
8. Pickup Coils
9. Alternator
10. Sidestand Switch
11. Neutral Switch
12. Oil Pressure Switch
13. In-tank Fuel Pump (DFI)
14. Vehicle-down Sensor (DFI)
15. ECU (DFI)
16. DFI Fuse 15 A
17. Battery
18. Junction Box
19. Starter Relay
20. Turn Signal Control Unit
21. DFI Main Relay
22. Oil Pressure Light Delay Unit
23. ISC Valve #1 (DFI, for Front Cylinder)
24. ISC Valve #2 (DFI, for Rear Cylinder)
25. Inlet Air Temperature Sensor (DFI)
26. Injectors (DFI)
27. Vacuum Sensor (DFI)
28. Meter Unit with FI Indicator LED Light (DFI)
29. Throttle Sensor (DFI)
30. Front Brake Light Switch
31. Radiator Fan
32. Radiator Fan Switch
33. Rear Brake Light Switch
34. In-tank Fuel Filter (DFI)
35. Fuel Reserve Switch (see next page)
36. Delivery Joint (DFI) (see next page)
37. Pressure Regulator (DFI) (see next page)

DFI: DFI Parts (this chapter)
F: Front

Downloaded from www.vulcanriders-sweden.org

DFI Parts Location

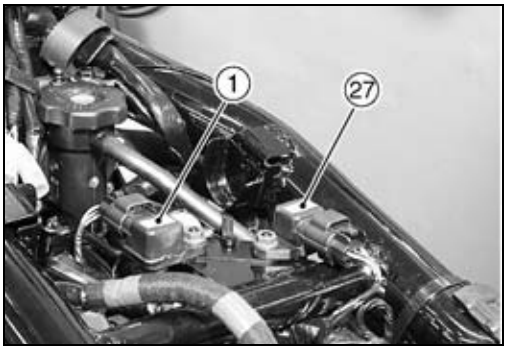

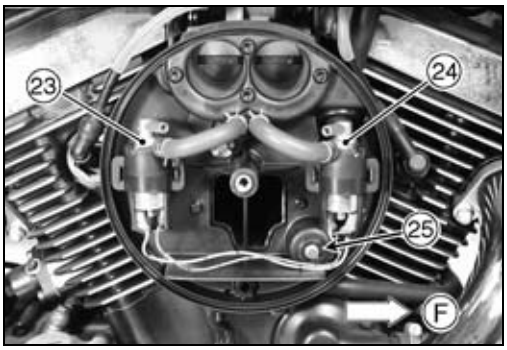

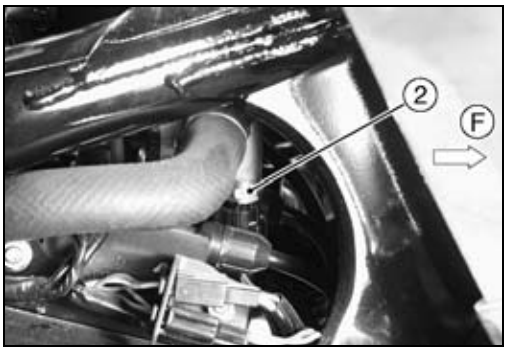



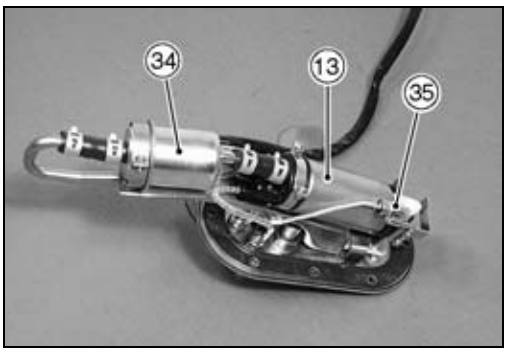

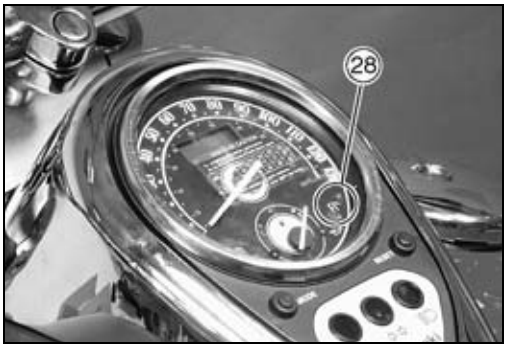

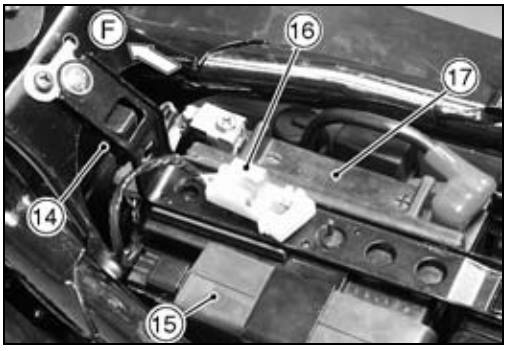



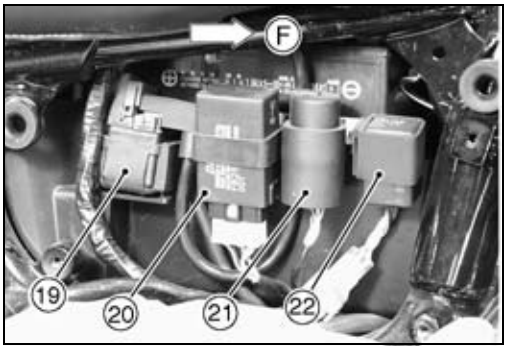

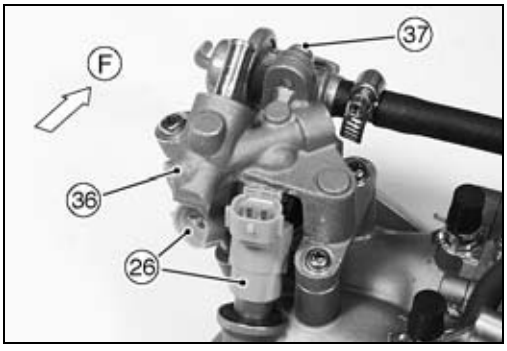

Downloaded from www.vulcanriders-sweden.org

DFI Parts Location

1. Atmospheric Pressure Sensor (DFI)
2. Water Temperature Sensor (DFI)
3. Ignition Coils (see preceding page)
4. Ignition Switch (see preceding page)
5. Starter Motor (see preceding page)
6. Water Temperature Switch (see preceding page)
7. Regulator/Rectifiers (see preceding page)
8. Pickup Coils (see preceding page)
9. Alternator (see preceding page)
10. Sidestand Switch (see preceding page)
11. Neutral Switch (see preceding page)
12. Oil Pressure Switch (see preceding page)
13. In-tank Fuel Pump (DFI)
14. Vehicle-down Sensor (DFI)
15. ECU (DFI)
16. DFI Fuse 15 A
17. Battery
18. Junction Box (see preceding page)
19. Starter Relay
20. Turn Signal Control Unit
21. DFI Main Relay
22. Oil Pressure Light Delay Unit
23. ISC Valve #1 (DFI, for Front Cylinder)
24. ISC Valve #2 (DFI, for Rear Cylinder)
25. Inlet Air Temperature Sensor (DFI)
26. Injectors (DFI)
27. Vacuum Sensor (DFI)
28. Meter Unit with FI Indicator LED Light (DFI)
29. Throttle Sensor (DFI)
30. Front Brake Light Switch (see preceding page)
31. Radiator Fan (see preceding page)
32. Radiator Fan Switch (see preceding page)
33. Rear Brake Light Switch (see preceding page)
34. In-tank Fuel Filter (DFI)
35. Fuel Reserve Switch
36. Delivery Joint (DFI)
37. Pressure Regulator (DFI)

DFI: DFI Parts (this chapter)
F: Front

Downloaded from www.vulcanriders-sweden.org

Exploded View

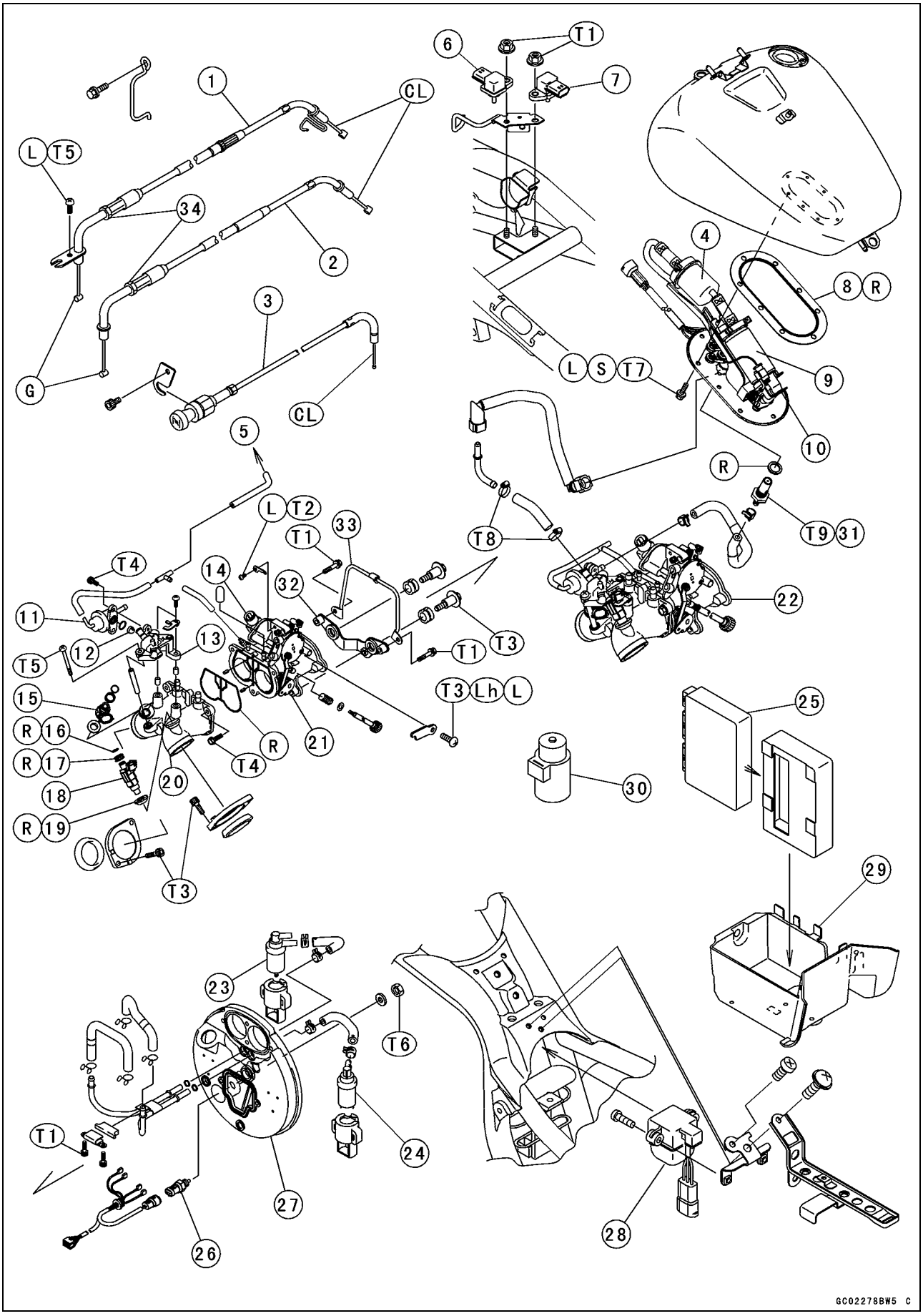

Downloaded from www.vulcanriders-sweden.org

Exploded View

1. Throttle Cable (accelerator)
2. Throttle Cable (decelerator)
3. Choke Cable
4. In-tank Fuel Filter
5. To vacuum sensor
6. Atmospheric Pressure Sensor
7. Vacuum Sensor
8. Fuel Pump Gasket
9. In-tank Fuel Pump (electric)
10. Fuel Pump Screen
11. Pressure Regulator
12. Pressure Regulator Screen
13. Delivery Joint
14. Throttle Sensor
15. Injector #1 for Front Cylinder
16. O-ring
17. Seal Ring
18. Injector #2 for Rear Cylinder
19. Seal
20. Inlet Manifold
21. Throttle Body
22. Throttle Assy
23. ISC Valve #2 (for Rear Cylinder)
24. ISC Valve #1 (for Front Cylinder)
25. ECU (Electronic Control Unit)
26. Inlet Air Temperature Sensor
27. Right Air Cleaner Base
28. Vehicle-down Sensor
29. Battery Case
30. DFI Main Relay
31. Return Fuel Check Valve
32. Throttle Assy Holder
33. Spark Plug Lead Holder
34. Throttle Cable Adjuster Locknuts

T1: 9.8 N·m (1.0 kgf·m, 87 in·lb)
T2: 2.9 N·m (0.30 kgf·m, 26 in·lb)
T3: 12 N·m (1.2 kgf·m, 104 in·lb)
T4: 4.9 N·m (0.50 kgf·m, 43 in·lb)
T5: 3.4 N·m (0.35 kgf·m, 30 in·lb)
T6: 7.8 N·m (0.80 kgf·m, 69 in·lb)
T7: 6.9 N·m (0.70 kgf·m, 61 in·lb)
T8: 1.5 N·m (0.15 kgf·m, 13 in·lb)
T9: 20 N·m (2.0 kgf·m, 14 ft·lb)
CL: Apply cable lubricant.
G: Apply grease.
L: Apply a non-permanent locking agent.
Lh: Left-hand Threads
R: Replacement Parts
S: Follow the specified tightening sequence.

Downloaded from www.vulcanriders-sweden.org

Exploded View

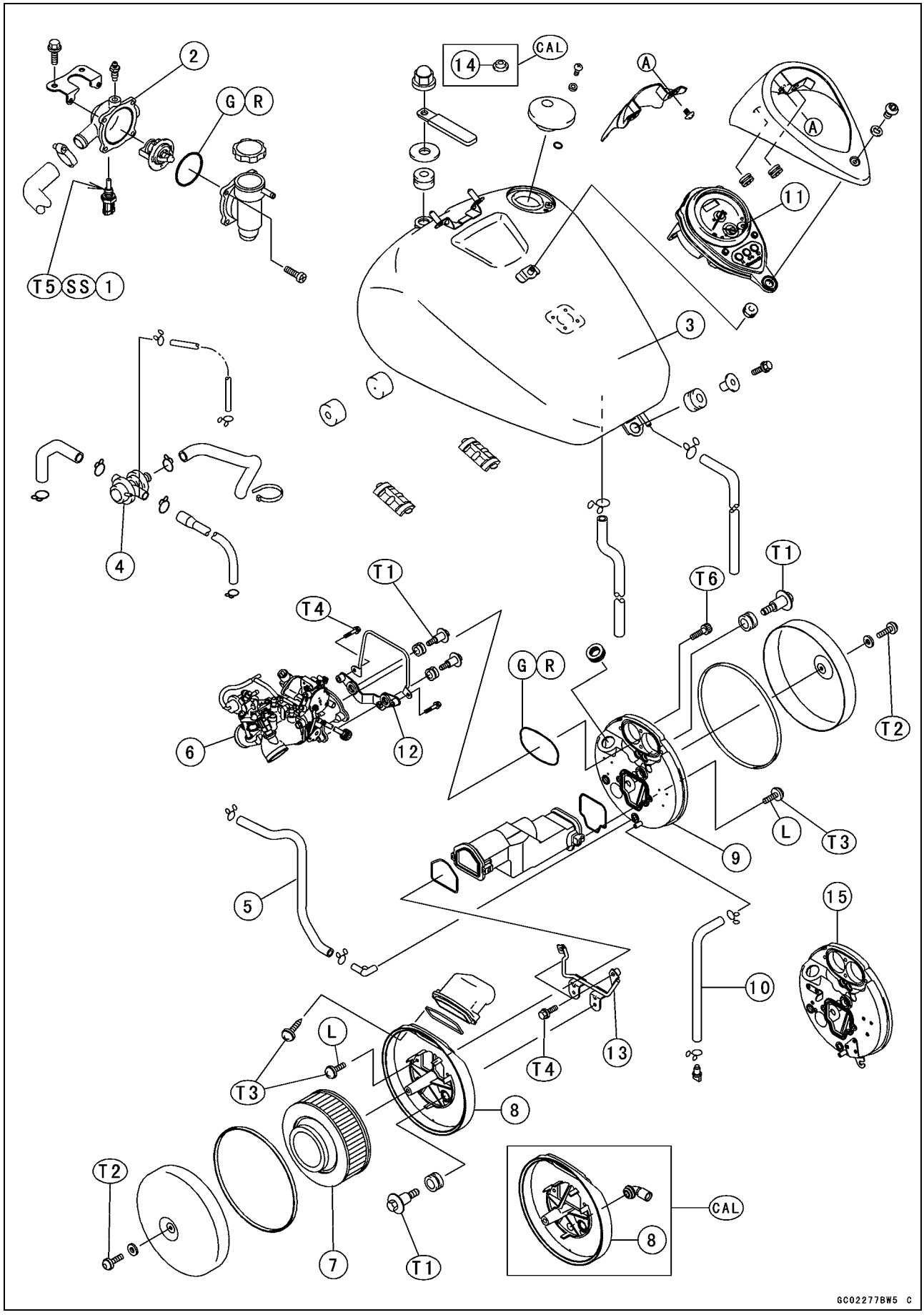

Downloaded from www.vulcanriders-sweden.org

Exploded View

1. Water Temperature Sensor (DFI)
2. Thermostat Housing
3. Fuel Tank
4. Vacuum Switch Valve
5. Oil Reserve Tank Hose
6. Throttle Assy
7. Air Cleaner Element
8. Left Air Cleaner Base
9. Right Air Cleaner Base (VN1500-N1 ~ N3)
10. Air Cleaner Drain Hose
11. FI Indicator LED (Light Emitting Diode) Light
12. Throttle Assy Holder
13. Air Cleaner Duct Holder
14. Fuel Tank Cap Seal (CAL)
15. Right Air Cleaner Base (VN1500-N4 ~)

T1: 12 N·m (1.2 kgf·m, 104 in·lb)
T2: 16 N·m (1.6 kgf·m, 12 ft·lb)
T3: 2.2 N·m (0.22 kgf·m, 19 in·lb)
T4: 9.8 N·m (1.0 kgf·m, 87 in·lb)
T5: 18 N·m (1.8 kgf·m, 13.0 ft·lb)
T6: 11 N·m (1.1 kgf·m, 95 in·lb)
G: Apply grease.
SS: Apply silicone sealant (Kawasaki Bond: 56019-120).
R: Replacement Parts

CAL: California Model

Downloaded from www.vulcanriders-sweden.org

DFI System

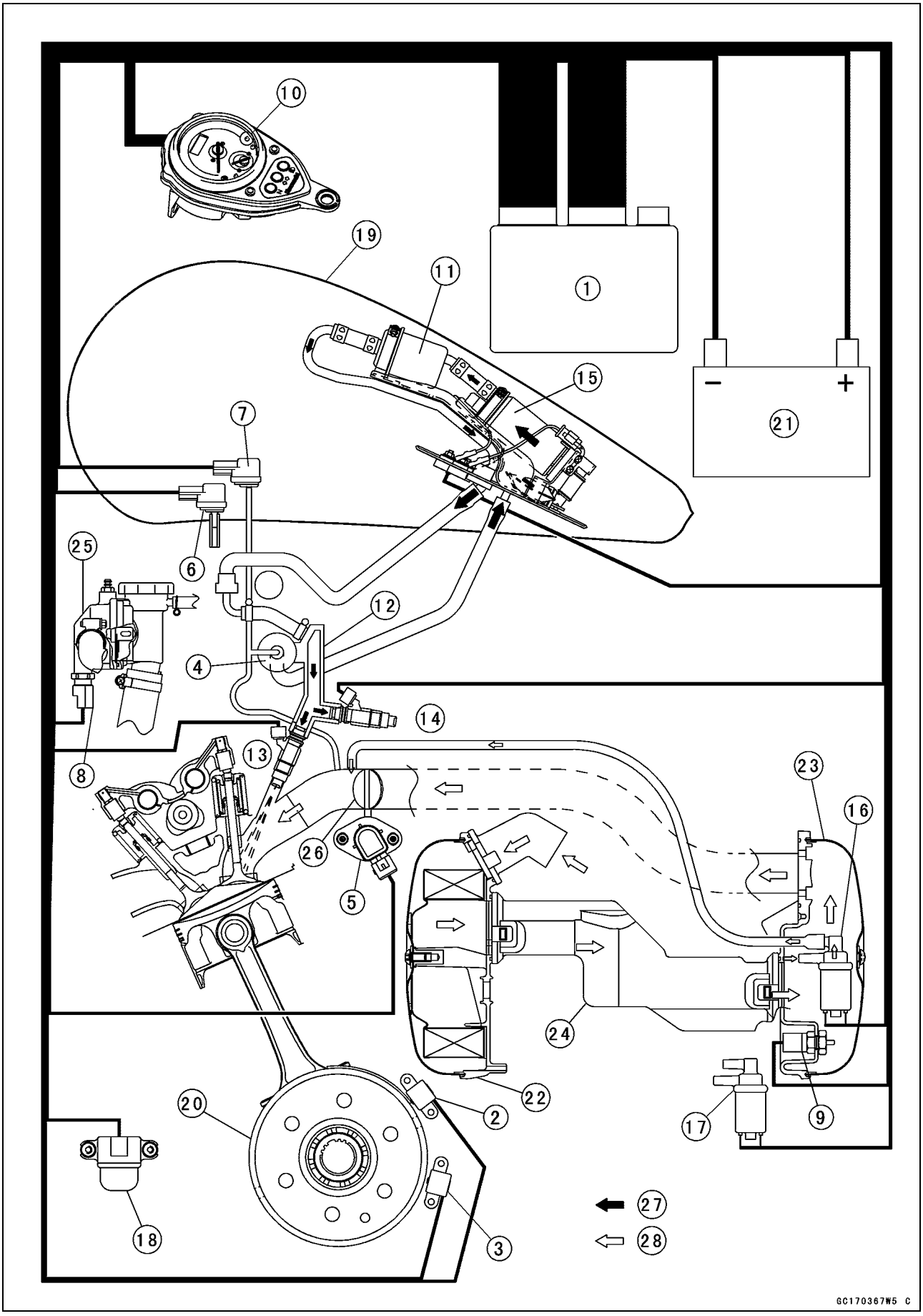

Downloaded from www.vulcanriders-sweden.org

DFI System

#1: For Front Cylinder
#2: For Rear Cylinder
1. ECU (Electronic Control Unit)
2. Pickup Coil #1
3. Pickup Coil #2
4. Pressure Regulator
5. Throttle Sensor (front view)
6. Atmospheric Pressure Sensor
7. Vacuum Sensor
8. Water Temperature Sensor
9. Inlet Air Temperature Sensor
10. FI Indicator LED Light
11. In-tank Fuel Filter
12. Delivery Joint
13. Injector #1
14. Injector #2
15. In-tank Fuel Pump
16. ISC Valve #1 (Idle Speed Control Valve #1, rear side)
17. ISC Valve #2 (Idle Speed Control Valve #2, front side)
18. Vehicle-down Sensor (rear view)
19. Fuel Tank (left view)
20. Alternator Rotor (left view)
21. Battery (left view)
22. Left Air Cleaner Housing (rear view)
23. Right Air Cleaner Housing (rear view)
24. Lower Air Cleaner Duct (rear view)
25. Thermostat Housing (left view)
26. Throttle Valves
27. Fuel Flow
28. Air Flow

Downloaded from www.vulcanriders-sweden.org

DFI Wiring Diagram

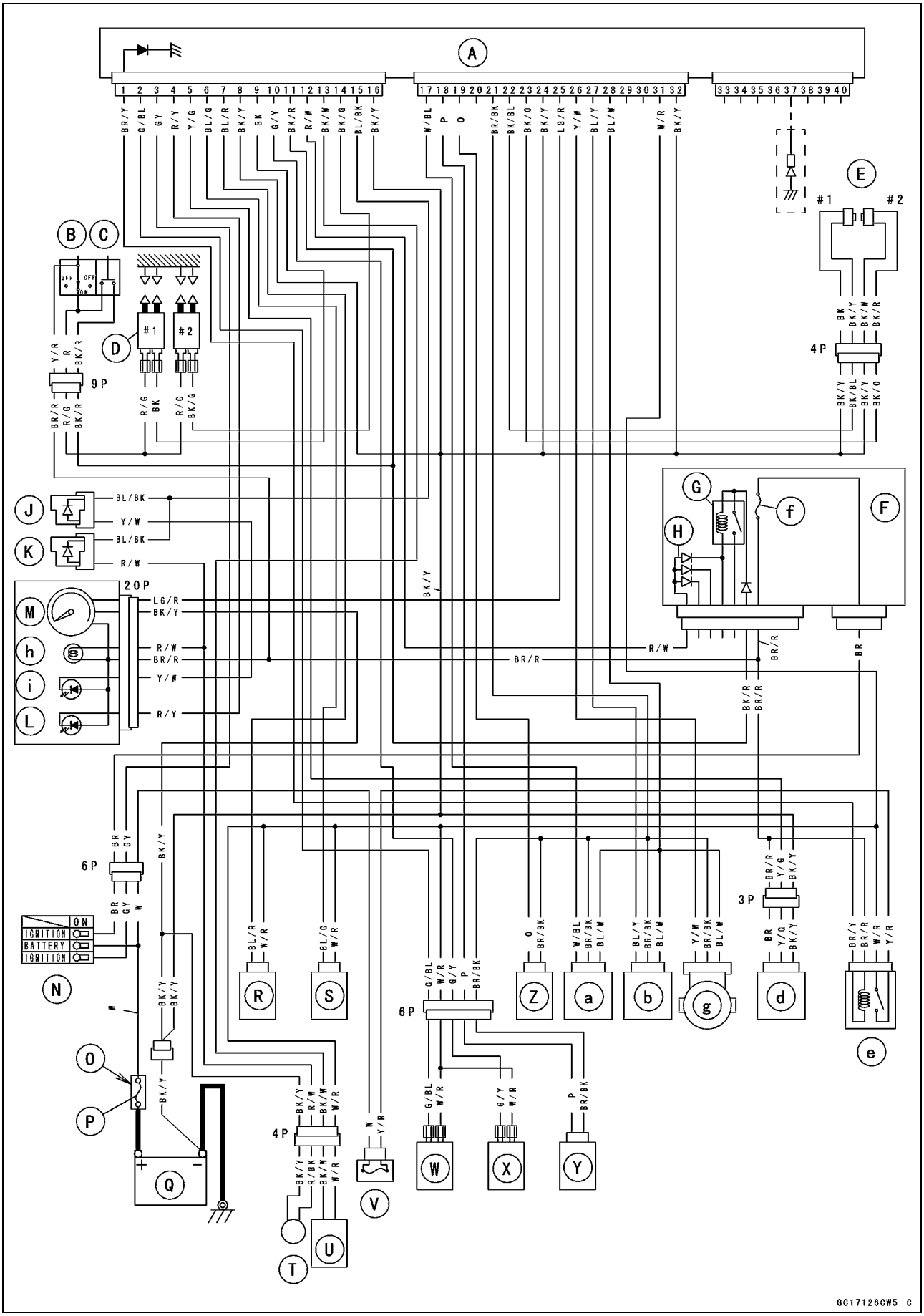

Downloaded from www.vulcanriders-sweden.org

DFI Wiring Diagram

Terminal Numbers of ECU Connectors

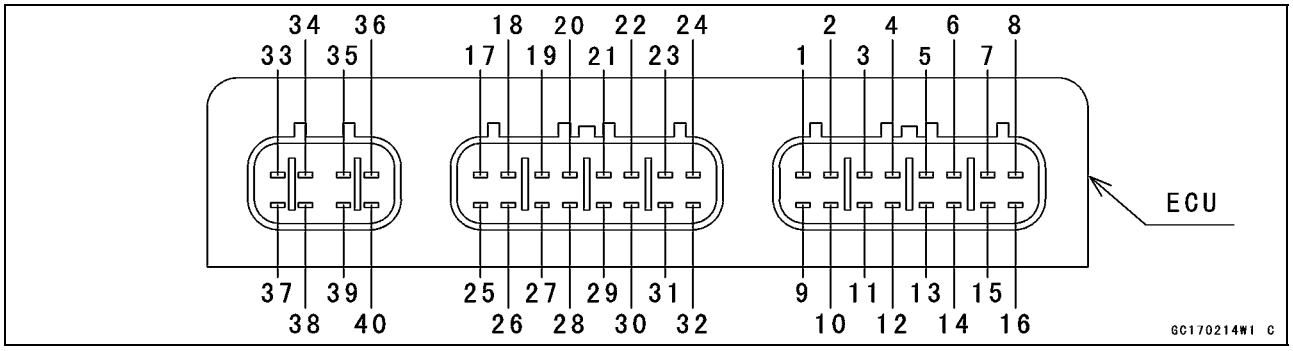

DFI and Electrical Parts

DFI: DFI Parts
- A: ECU Electronic Control Unit (DFI)
- B. Engine Stop Switch
- C. Starter Button
- D. Ignition Coils
- E. Pickup Coils
- F. Junction Box
- G. Starter Circuit Relay
- H. Interlock Diodes
- J. Diode for water temperature warning LED light
- K. Diode for fuel warning light
- L. FI Indicator LED Light: (DFI)
- M. Speedometer
- N. Ignition Switch
- O. Starter Relay
- P. Main Fuse 30 A
- Q. Battery
- R. Fuel Injector #1: (DFI)
- S. Fuel Injector #2: (DFI)
- T. Fuel Reserve Switch
- U. In-tank Fuel Pump: (DFI)
- V. DFI Fuse 15 A: (for ECU, Injectors, In-tank Fuel Pump, DFI Main Relay, and ISC Valves)
- W. ISC Valve #2: (DFI)
- X. ISC Valve #1: (DFI)
- Y. Inlet Air Temperature Sensor: (DFI)
- Z. Water Temperature Sensor: (DFI)
- a. Vacuum Sensor: (DFI)
- b. Atmospheric Pressure Sensor: (DFI)
- g. Throttle Sensor: (DFI)
- d. Vehicle-down Sensor: (DFI)
- e. DFI Main Relay: (for ECU, Injectors, In-tank Fuel Pump, and ISC Valves)
- f. Ignition Fuse 10 A
- h. Fuel Level Warning Light
- i. Water Temperature Warning LED Light

Terminal Names

#1: Front Cylinder
#2: Rear Cylinder
1. Main Relay Solenoid Ground in ECU
2. ISC Valve #2 Output Signal
3. unused.
4. FI Indicator LED Light Output Signal
5. Vehicle-down Sensor Output Signal
6. Injector #2 Output Signal
7. Injector #1 Output Signal
8. Ignition Coil #1 Control Circuit Ground to Battery
9. Ignition Coil #1 Output Signal
10. ISC Valve #1 Output Signal
11. Electric Starter Button Output Signal
12. Interlock Circuit Output Signal
13. Fuel Pump Output Signal
14. Ignition Coil #2 Output Signal
15. Input Signal for Bulb Burned-out Check from ECU (for water temperature warning LED light, and fuel level indicator light)
16. Ignition Coil #2 Control Circuit Ground to Battery
17. Vacuum Sensor Output Signal
18. Inlet Air Temperature Sensor (+)
19. Water Temperature Sensor (+)
20. vacancy
21. Ground of Inlet Air Temperature, Water Temperature, Vacuum, Atmospheric Pressure, and Throttle Sensors
22. Pickup Coil #1 Output Signal
23. Pickup Coil #2 Output Signal
24. ECU Power Source Circuit Ground to Battery
25. Speed Sensor Output Signal
26. Throttle Sensor Output Signal
27. Atmospheric Pressure Sensor Output Signal
28. Power Supply to Sensors (vacuum, atmospheric pressure, and throttle sensors) from ECU
29. vacancy
30. vacancy
31. Power Supply to ECU, ISC Valves, Injectors, and Fuel Pump
32. ECU Power Source Circuit Ground to Battery (the same as 24)
33. 34. 35. 36. 38. 39. 40. unused.
37. Self-diagnosis Output Signal (generated by grounding this terminal and shown by FI indicator LED light)

Downloaded from www.vulcanriders-sweden.org

DFI Servicing Precautions

There are a number of important precautions that should be followed servicing the DFI system.

- This DFI system is designed to be used with a 12 V battery as its power source. Do not use any other battery except for a 12 V battery as a power source.
- Do not reverse the battery lead connections. This will damage the ECU.
- To prevent damage to the DFI parts, do not disconnect the battery leads or any other electrical connections when the ignition switch is on, or while the engine is running.
- Take care not to short the leads that are directly connected to the battery positive (+) terminal to the chassis ground.
- When charging, remove the battery from the motorcycle. This is to prevent ECU damage by excessive voltage.

- Whenever the DFI electrical connections are to be disconnected, first turn off the ignition switch, and disconnect the battery (–) terminal. Conversely, make sure that all the DFI electrical connections are firmly reconnected before starting the engine.
- Connect these connectors until they click [A].

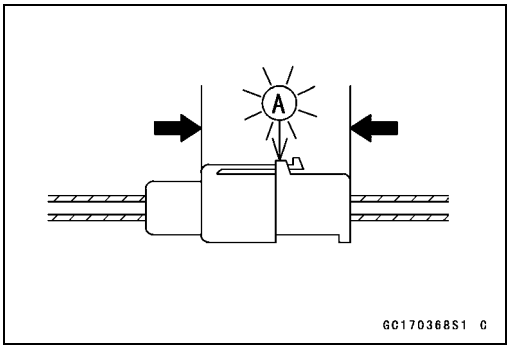

- Do not turn the ignition switch ON while any of the DFI electrical connectors are disconnected. The ECU memorizes fault codes.
- Do not spray water on the electrical parts, DFI parts, connectors, leads, and wiring. Never water a vehicle with connectors unplugged because seals don't work and terminals could corrode.
- If a transceiver is installed on the motorcycle, make sure that the operation of the DFI system is not influenced by electric wave radiated from the antenna. Check operation of the system with the engine at idle. Locate the antenna as far as possible away from the ECU.
- To prevent corrosion and deposits in the fuel system, do not add any fuel antifreeze chemicals to fuel.
- When any fuel hose is disconnected, do not turn on the ignition switch. Otherwise, the fuel pump will operate and fuel will spout from the fuel hose.
- Do not operate the in-tank fuel pump if the pump is completely dry. This is to prevent pump seizure.
- Before removing the fuel system parts, blow the outer surfaces of these parts clean with compressed air.
- When any fuel hose is disconnected, fuel may spout out by residual pressure in the fuel line. Cover the hose joint with a piece of clean cloth to prevent fuel spillage.

Downloaded from www.vulcanriders-sweden.org

DFI Servicing Precautions

○The fuel hoses are designed to be used throughout the motorcycle's life without any maintenance, however, if the motorcycle is not properly handled, the high pressure inside the fuel line can cause fuel to leak [A] or the hose to burst. Bend and twist the fuel hose while examining it.

★Replace the fuel hose if any cracks [B] or bulges [C] are noticed.

○Route the hoses according to Cable, Wire, and Hose Routing section in the General Information chapter.

○When installing the fuel hoses, avoid sharp bending, kinking, flattening or twisting, and route the fuel hoses with a minimum of bending so that the fuel flow will not be obstructed.

★Replace the hose if it has been sharply bent or kinked.

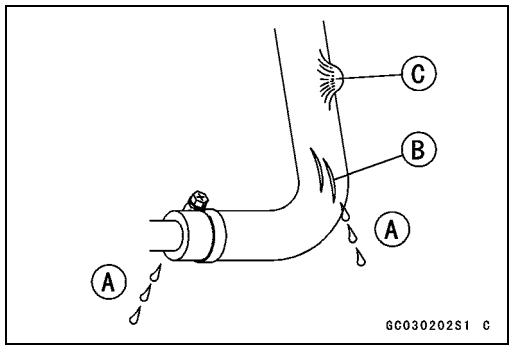

○Install the hose clamps in the position shown, and securely tighten the clamp screws to the specified torque.

Torque - High Pressure Fuel Hose Clamp Screws: 1.5 N·m (0.15 kgf·m, 13 in·lb)

○Check the fuel system for leaks after hose installation.

Fuel Hose [A]
Clamp [B]
Fuel Pipe [C]
18 ~ 22 mm (0.71 ~ 0.87 in.) [D]
2 ~ 3 mm (0.08 ~ 0.12 in.)[E]

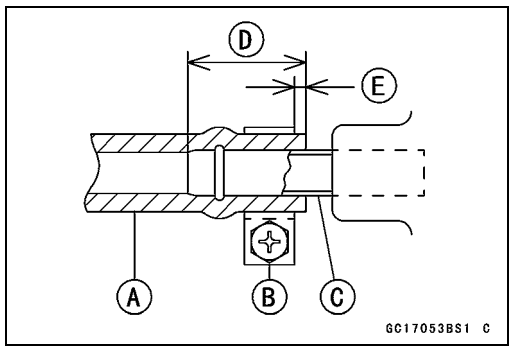

○Fit the fuel return hose [A] onto the pipe fully and install the plate clamp [B] beyond the raised rib [C].
1 ~ 2 mm (0.04 ~ 0.08 in.) [D]

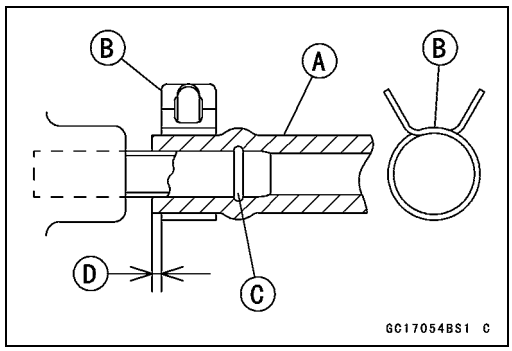

○Fit the high pressure fuel hose joint [A] onto the outlet pipe until the joint clicks [B].
Front [C]

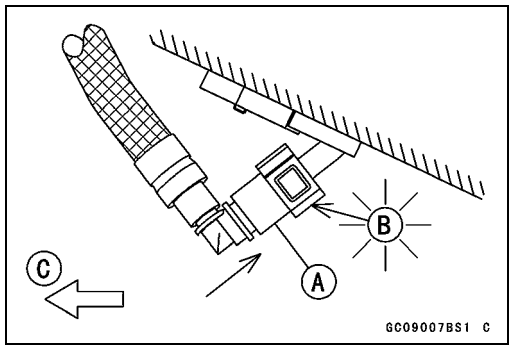

Downloaded from www.vulcanriders-sweden.org

DFI Servicing Precautions

○Pull the high pressure fuel hose joint [A] down [B] and make sure it is locked and doesn't come off.

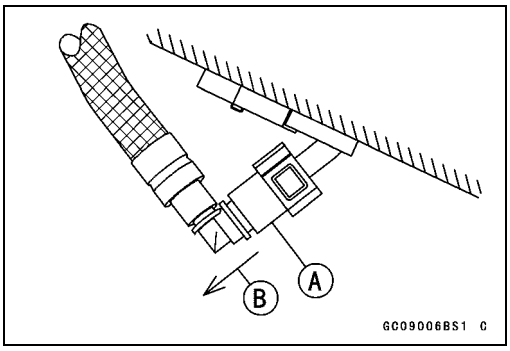

○To maintain the correct fuel/air mixture (F/A), there must be no inlet air leaks in the DFI system. Be sure to install the oil filler cap [A] after filling the engine oil, using the filler cap driver [B].
Clutch Cover [C]
Front [D]

Special Tool - Filler Cap Driver: 57001-1454

● Tighten:

Torque - Oil Filler Cap: 1.5 N·m (0.15 kg·m, 13 in·lb)

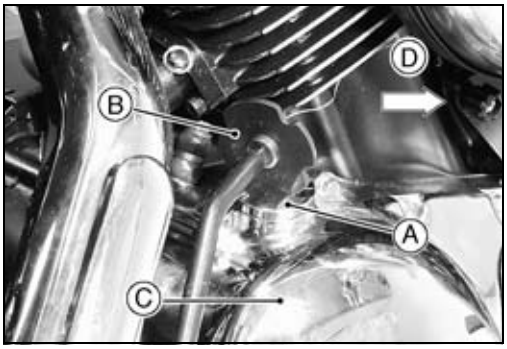

Downloaded from www.vulcanriders-sweden.org

Throttle Grip and Cables

Throttle Grip Play Inspection

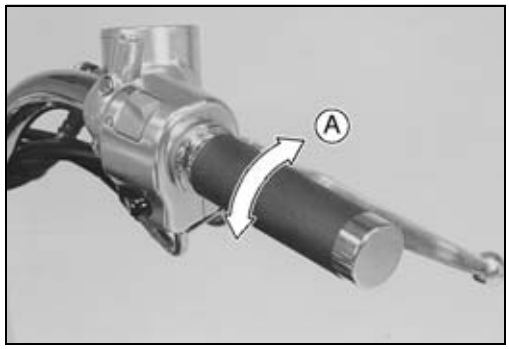

- Check the throttle grip free play [A].

★If the free play is incorrect, adjust the throttle cable.

Throttle Grip Free Play
Standard: 2 ~ 3 mm (0.08 ~ 0.12 in.)

- Check that the throttle grip moves smoothly from close to full open, and the throttle closes quickly and completely in all steering positions by the return spring.

★If the throttle grip doesn't return properly, check the throttle cable routing, grip free play, and cable damage. Then lubricate the throttle cable.

- Run the engine at the idle speed, and turn the handlebar all the way to the right and left to ensure that the idle speed doesn't change.

★If the idle speed increases, check the throttle grip free play and the cable routing.

Throttle Grip Free Play Adjustment

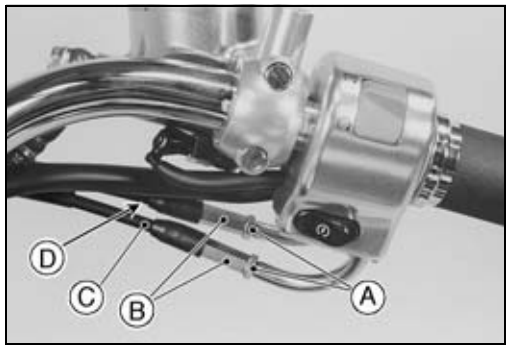

- Loosen the locknuts [A] and screw the adjusters [B] all the way in so as to give the throttle grip plenty of play.
- Turn out the adjuster of the decelerator cable [C] until there is no play.
- Tighten the locknut against the adjuster.
- Turn the adjuster of the accelerator cable [D] until the proper amount of throttle grip free play is obtained and tighten the locknut against the adjuster.

★If the proper amount of free play cannot be obtained by using the adjusters at the throttle grip, use the lower adjuster of the accelerator throttle cable.

- Give the throttle grip plenty of play by turning the adjusters at the grip in fully.

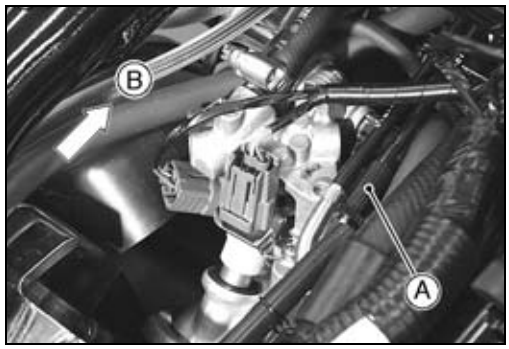

- Remove the fuel tank (see Fuel Tank Removal).
- Turn the lower accelerator cable adjuster [A] until the correct throttle grip free play is obtained and tighten the locknut against the adjuster.
  Front [B]

★If the proper amount of free play can not be obtained with the lower adjuster, use the adjuster at the upper end of the accelerator cable again.

⚠ WARNING

Operation with incorrectly routed or improperly adjusted cables could result in an unsafe riding condition.

Downloaded from www.vulcanriders-sweden.org

Throttle Grip and Cables

Choke Knob Operation

○Do not use the choke knob except when the engine has a starting difficulty, like in cold weather or at high altitude. The DFI system has an automatic choke system, using ISC valves, a water temperature sensor, and an atmospheric pressure sensor, which provide startability.

NOTE

○*Pull the choke knob fully when using. The choke lever doesn't work with the choke knob halfway.*

○When flooded, do not crank the engine with the throttle fully opened like a carburetor. This promotes engine flooding because more fuel is supplied automatically by the DFI system.

Choke Cable Free Play Inspection

○Choke cable free play connot be adjusted.

● Check that the choke inner cable slides smoothly by pulling and pushing the choke knob [A] lightly.

★If there is any irregularity, or the choke lever [B] doesn't work when the choke knob is pulled fully, replace the choke cable.

Front [C]

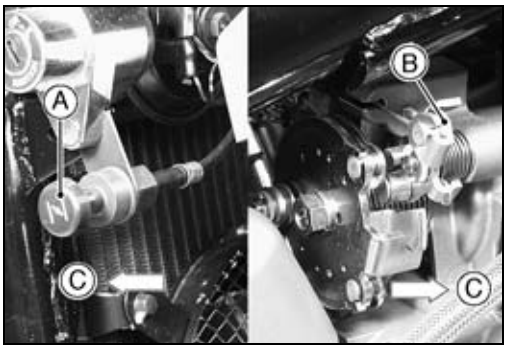

Cable Removal/Installation

○See Throttle Assy section in this chapter for removal/installation of the throttle cables and choke cable.

Cable Lubrication and Inspection

● Whenever the choke cable or the throttle cables are removed or in accordance with the Periodic Maintenance Chart, lubricate the these cables (see General Lubrication in the Appendix chapter).

○Use a commercially available pressure cable lubricator to lubricate these cables.

○With the cable disconnected at both ends, the cable should move freely in the cable housing.

Downloaded from www.vulcanriders-sweden.org

Throttle Assy

Idle Speed Inspection

- Start the engine and warm it up thoroughly.

○At first the engine will run fast to decrease warm up time (fast idle).

○Gradually the fast idle will lower to a certain RPM automatically. This is the idle speed.

- Check the idle speed.

★If the idle speed is out of the specified range, adjust it (see Idle Speed Adjustment).

Idle Speed
Standard: 950 ±50r/min (rpm)

- With the engine idling, turn the handlebar to both sides.

★If handlebar movement changes the idle speed, the throttle cables may be improperly adjusted or incorrectly routed, or damaged. Be sure to correct any of these conditions before riding (see Cable, Wire, and Hose Routing section in the General Information chapter).

⚠ WARNING

Operation with improperly adjusted, incorrectly routed, or damaged cables could result in an unsafe riding condition.

Idle Speed Adjustment

- Start the engine and warm it up thoroughly.

○Wait until fast idle speed lowers to a certain value.

- Turn the adjusting screw [A] until the idle speed is correct.

○Open and close the throttle a few times to make sure that the idle speed is within the specified range. Readjust if necessary.

Front [B]

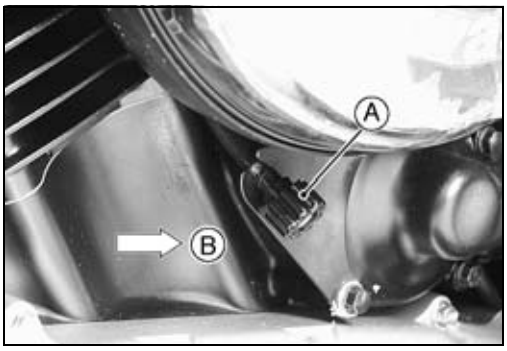

Throttle Bore Cleaning

- Remove the screw [A] and take off the right air cleaner cover [B].

Front [C]

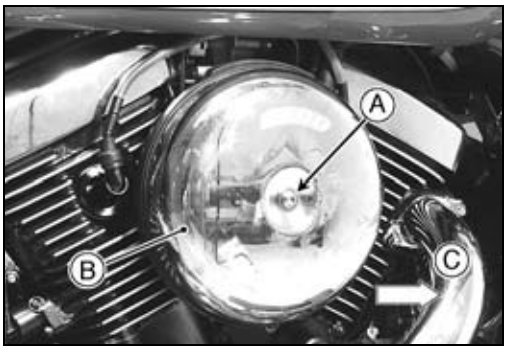

Downloaded from www.vulcanriders-sweden.org

Throttle Assy

● Check the throttle bores [A] at the butterfly valves [B] and around them for carbon deposits by opening the valves.
★ If any carbon accumulates, wipe the carbon off the throttle bores around the butterfly valves, using a lint-free cloth [C] penetrated with a high-flash point solvent.
Front [D]

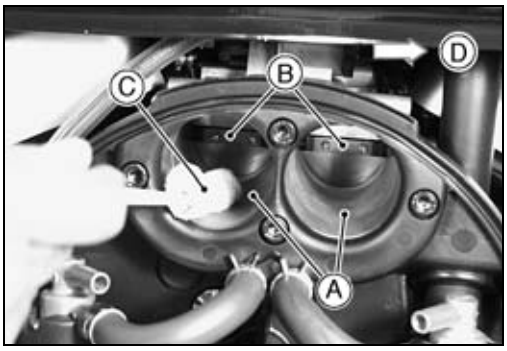

High Altitude Performance Adjustment

○ Any modification is not necessary in this model since the atmospheric pressure sensor senses atmospheric pressure change due to high altitude and the ECU compensates the change. (For reference: Mostly, Kawasaki recommends US carburetor models operated above 4 000 feet, EPA-approved modification to improve the EMISSION CONTROL PERFORMANCE).

Throttle Assy Removal

● Remove the fuel tank (see this chapter).
● Remove the connector [A] of the inlet air temperature sensor [B].
Vacuum Sensor [C]
Front [D]

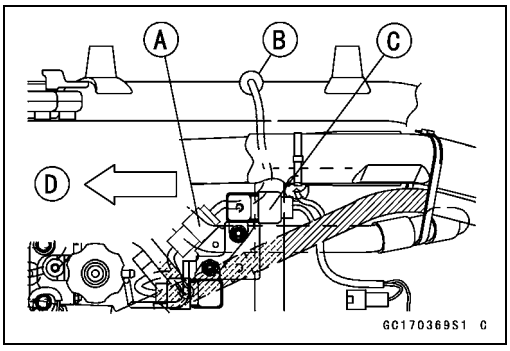

⚠ WARNING

Gasoline is extremely flammable and can be explosive under certain conditions. Make sure the area is well-ventilated and free from any source of flame or sparks; this includes any appliance with a pilot light. Do not smoke. Turn the ignition switch OFF. Disconnect the battery (–) terminal.
Be prepared for fuel spillage; any spilled fuel must be completely wiped up immediately.

● Remove:
Right and Left Air Cleaner Base (see this chapter)
Ignition Coil Second Lead Holder [A]
Throttle Assy Holder [B]
Second Lead Holder Bolts [C]
Throttle Assy Holder Bolts [D]
Front [E]

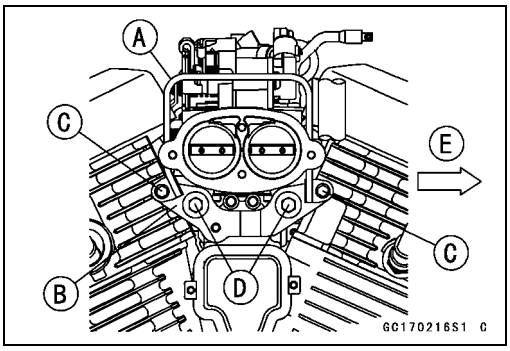

Downloaded from www.vulcanriders-sweden.org

Throttle Assy

- Disconnect:
  Throttle Sensor Connector [A] (from the throttle sensor)
  Front and Rear Injector Connectors [B]

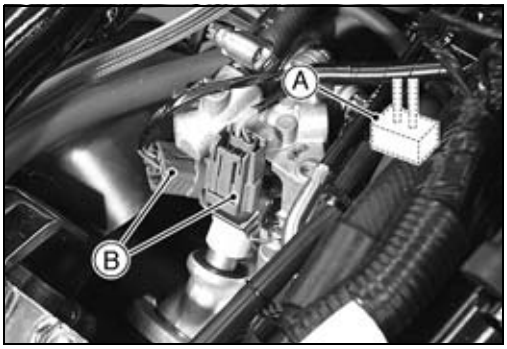

- Remove the following from the choke cable holder [A] (left -behind view).
  Screw [B]
  Choke Cable Plate [C]

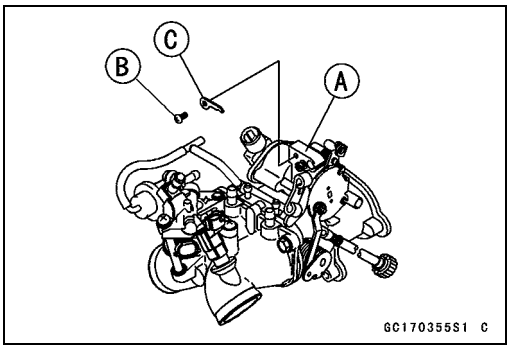

- While pushing the choke lever [B] forward, remove the cable housing from the choke cable holder [C] and the inner cable out of the holder slit [D].
- Take off the lower end [A] from the choke lever.
  Front [E]

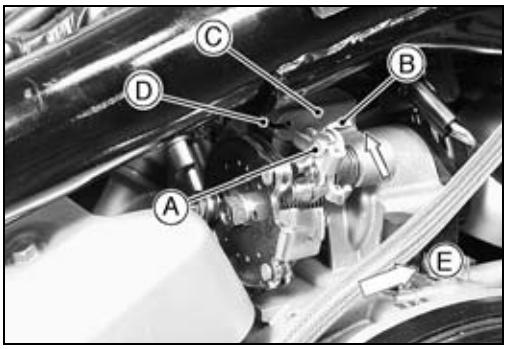

- Remove the screws and take off the right switch housing.
- Remove the accelerator cable end [A] and decelerator cable end [B] at the throttle grip.
  Front [C]

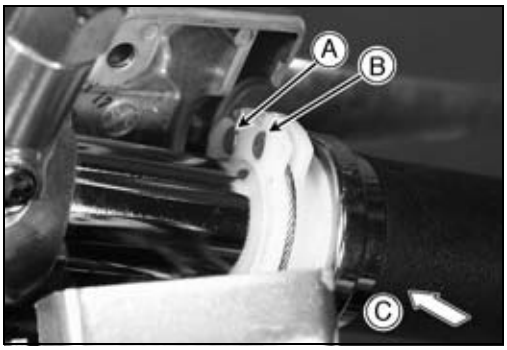

- Pry open the staking [A] on the cable holder [B], and remove the cable clip [C].
  Rear View [D]

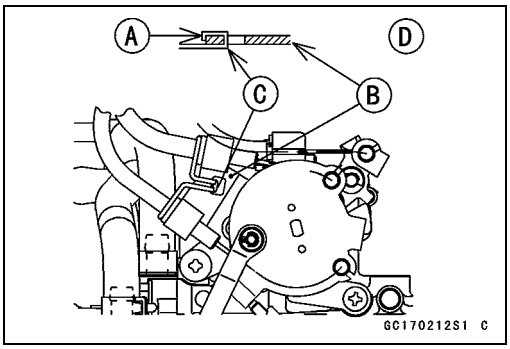

Downloaded from www.vulcanriders-sweden.org

Throttle Assy

- Turn the throttle pulley [A] as shown, and pull out the accelerator cable housing [B] from the cable holder [C] (rear view).
- Return the pulley, and pull out the decelerator cable housing [D] from the cable holder.

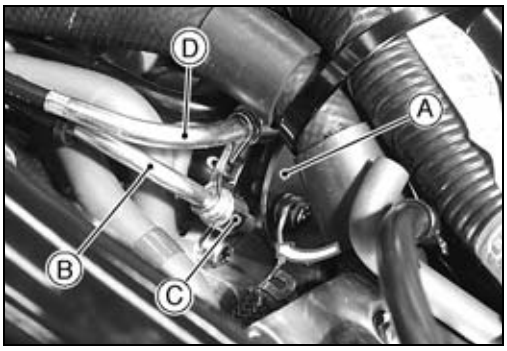

- Remove the decelerator cable end [A] from the throttle pulley [B].
- Using needle nose pliers, move the accelerator inner cable outside the engine, and remove the cable end [C] from the pulley.

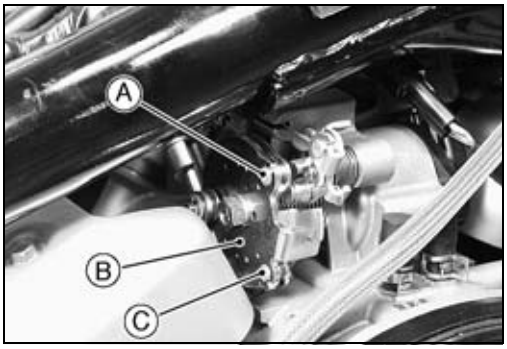

- Pinch the hose joint lock with your fingers, disconnect the joint [A] and take out the high pressure fuel hose [B].

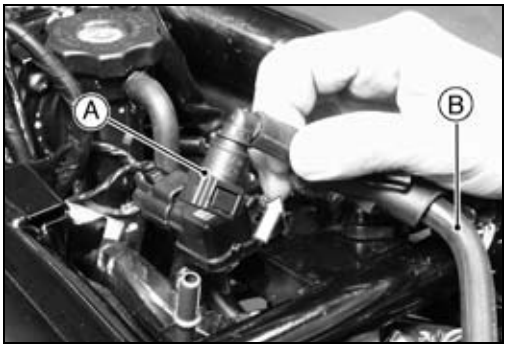

- Unscrew the inlet manifold bolts [A].
  Inlet Manifold [B]
  Front [C]

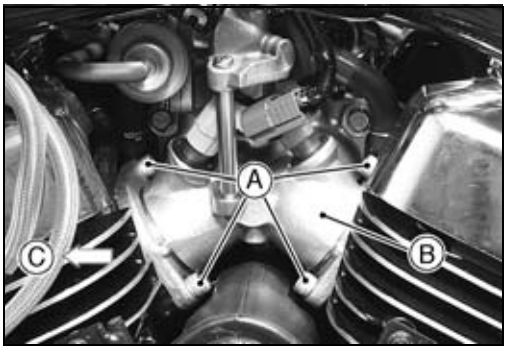

- Pull the vacuum hoses [C] off the pressure regulator [A] and the throttle body [B] (rear view).

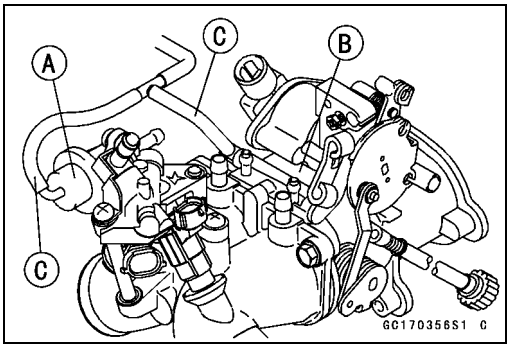

Downloaded from www.vulcanriders-sweden.org

Throttle Assy

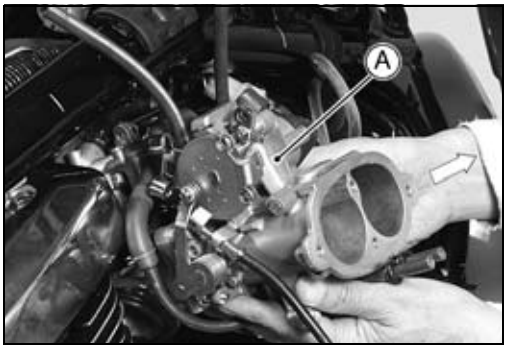

- Take out the throttle assy [A] from the right side, while tilting it up.

○Be careful not to damage (dent, nick, flaw, and crack) the flange mating surface and the plastic parts.

○Do not drop the throttle assy, especially on a hard surface.

⚠ WARNING

The throttle assy should never be allowed to fall. Throttle may become stuck, possibly causing an accident.

- Stuff a piece of lint-free, clean cloth into the throttle assy, and the inlet ports of the cylinder heads to keep dirt out of the engine.

⚠ WARNING

If dirt or dust is allowed to pass through into the throttle bore, the throttle may become stuck, possibly causing an accident.

CAUTION

If dirt gets through into the engine, excessive engine wear and possibly engine damage will occur.

Throttle Assy Installation

- Replace the flange seal [A] with a new one.
- With a high-flash point solvent, clean off the flange surface of the cylinder head and wipe dry.
- Install the flange [B] and the seal in the direction shown. Face the ribs [C] of the flange and the smaller diameter end upwards.

○The seal should be centered on the flange.

- Tighten the inlet manifold bolts [D] to a snag fit.

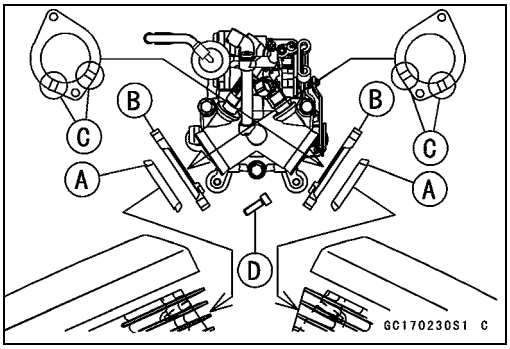

- First, tighten the throttle assy holder bolts [A], secondly the inlet manifold bolts [B] to the specified torque.
  Front [C]

Torque - Throttle Assy Holder Bolts, Inlet Manifold Bolts: 12 N·m (1.2 kgf·m, 104 in·lb)
Spark Plug Lead Holder Bolts: 9.8 N·m (1.0 kgf·m, 87 in·lb)

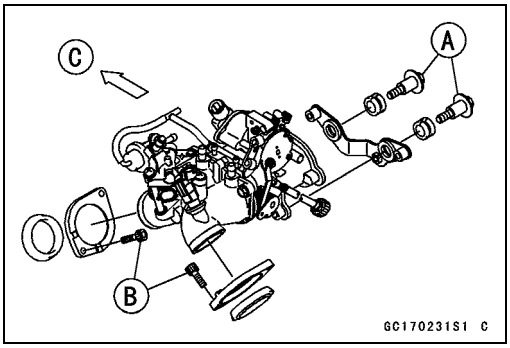

Downloaded from www.vulcanriders-sweden.org

Throttle Assy

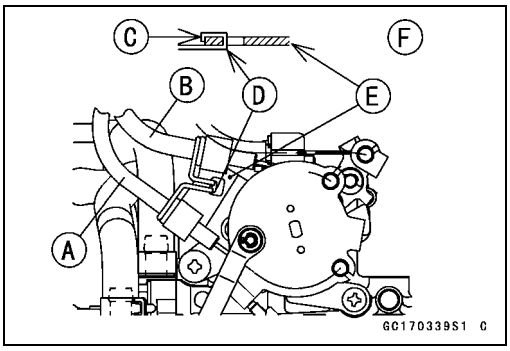

- Apply a thin coating of grease to the throttle cable upper ends.
- Install the lower ends of the throttle cables in the throttle pulley.
  Accelerator Cable [A]
  Decelerator Cable [B]
- Run the throttle cables correctly (see Cable, Wire, and Hose Routing section in the General Information chapter).
- Install the upper ends of the throttle cables in the grip.
- Turn the throttle grip and make sure that the throttle valves move smoothly and return by spring force.
- Check the throttle grip free play (see Throttle Grip Free Play Inspection).
- Stake [C] the cable clip [D] on the throttle cable holder [E].
  Rear View [F]
- Install the lower end of the choke cable in the choke lever.
- Apply:

Non-permanent Locking Agent -
Choke Cable Plate Screw

- Tighten:

Torque - Choke Cable Plate Screw: 2.9 N·m (0.30 kgf·m, 26 in·lb)

- Run the choke cable correctly (see Cable, Wire, and Hose Routing section in the General Information chapter).
- Check that the choke knob moves smoothly.

⚠ WARNING

Operation with an incorrectly routed cable could result in an unsafe riding condition.

- Install the fuel tank and the air cleaner housing (see Fuel Tank Removal and Air Cleaner Housing Removal).

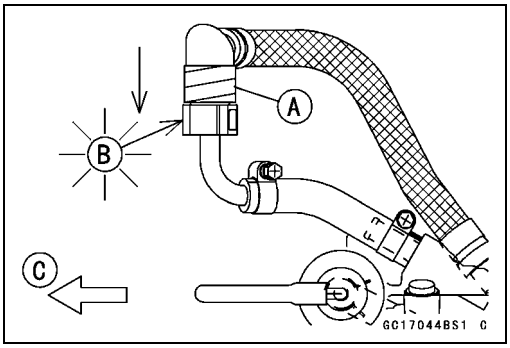

- Fit the high pressure fuel hose joint [A] ono the inlet pipe until the joint clicks [B].

○Insert the hose joint straight along the inlet pipe.
  Front [C]

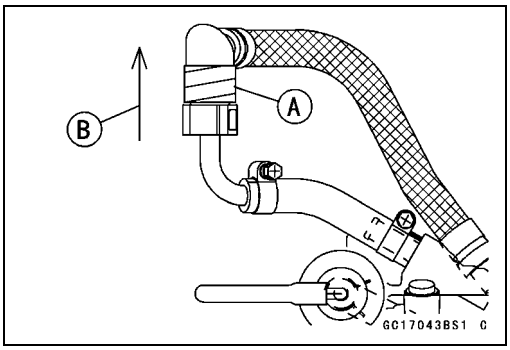

- Pull the high pressure fuel hose joint [A] up [B] and make sure it is locked and doesn't come off.
- Install the fuel tank and the air cleaner housing (see this chapter).

Downloaded from www.vulcanriders-sweden.org

Throttle Assy

Throttle Assy Disassembly/Assembly

- Remove the throttle assy (see Throttle Assy Removal).
- Unscrew two bolts [A], and pull out the ISC pipe #1 [B], and ISC pipe #2 [C] from the hoses [D].

Bottom View [E]

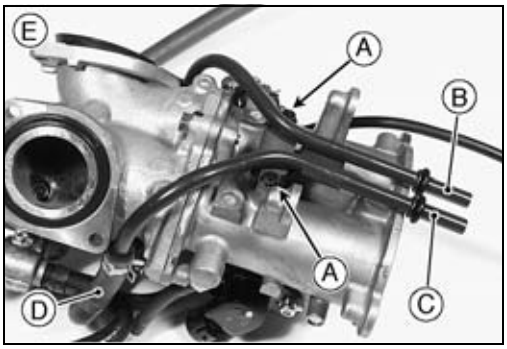

- Remove the three throttle body flange bolts [A].
- Split the throttle assy into the throttle body [B] and the inlet manifold [C]. The gasket [D] comes off.
- Discard the gasket.

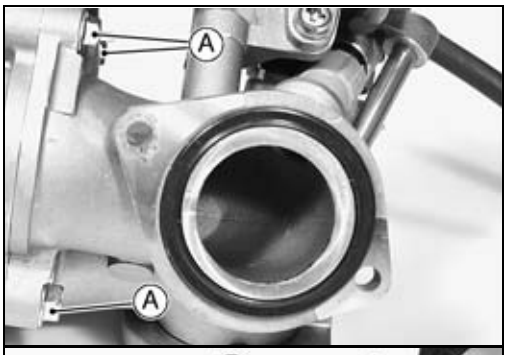

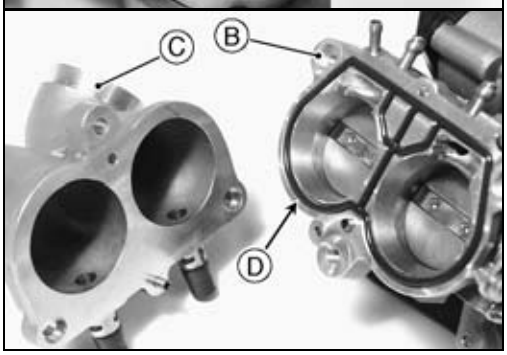

○Do not remove or adjust the following parts. These parts are set at the factory and cannot be readjusted.

CAUTION

Adjustment of these parts could result in poor performance, requiring replacement of the throttle body.

Throttle Sensor [A]:

Turning the sensor body could spoil the ignition timing and injection quantity.

Front View [B]

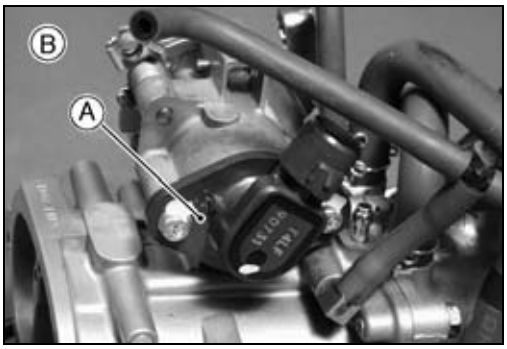

Throttle Stop Screw [A]:

Tampering with this screw could spoil the idling performance since the screw sets the gap between the throttle valves and the throttle bore with throttle grip closed.

Rear View [B]

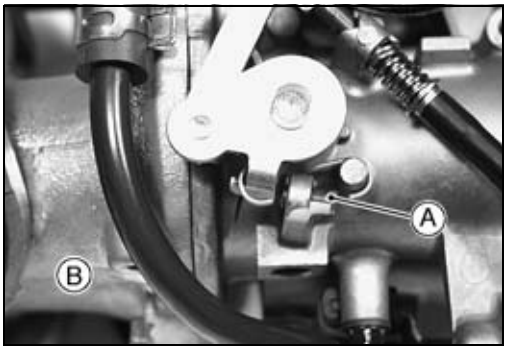

Downloaded from www.vulcanriders-sweden.org

Throttle Assy

Choke Lever Stop Screw [A]:
This screw sets the throttle valve opening when the choke knob is pulled fully. Tampering with the screw could cause malfunction of the choke lever.
Rear View [B]
Throttle Valve and Throttle Shaft:
They are not allowed to remove because of difficulty of removal.

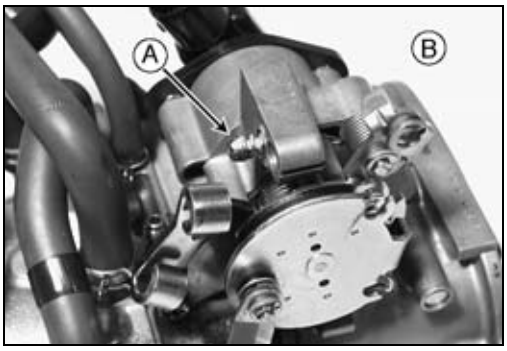

- Remove the delivery joint and injectors (see Indicator Removal).
- Open the butterfly valves [A], and wipe any carbon off the throttle bores [B] around the valves, using a piece of lint-free cloth penetrated with a high-flash point solvent.
- Clean the bores [C] of the inlet manifold [D] as well.
- Blow away dirt or dust from the throttle body and the inlet manifold by applying compressed air.

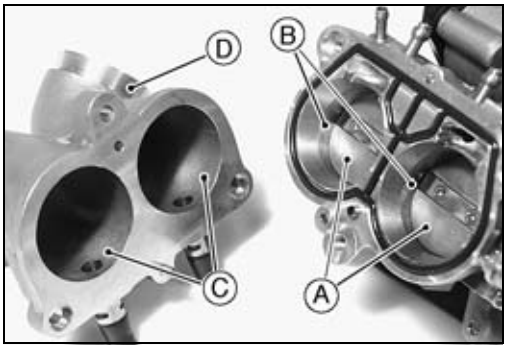

CAUTION

Do not immerse the throttle body (or throttle assy) in a high-flash point solvent for cleaning. This could damage the throttle sensor on the throttle body.

- Before assembly, visually inspect the mating surfaces [A] for any damage, like dent, nick, rust, flaw, and crack.
- Nick or rust damage can sometimes be repaired by using emery paper (first No. 200, then 400) to remove sharp edges or raised areas.

★If the damage is not repairable, replace the throttle body and/or the inlet manifold to prevent leakage.

- With a high-flash point solvent, clean off the mating surfaces and wipe dry.
- Be sure to install the dowel pins [B].
- Fit the new gasket [C] into the groove. Be careful not to pinch the gasket between the mating surfaces.
- Tighten the flange bolts evenly.

Torque - Throttle Body Flange Bolts: 4.9 N·m (0.50 kgf·m, 43 in·lb)

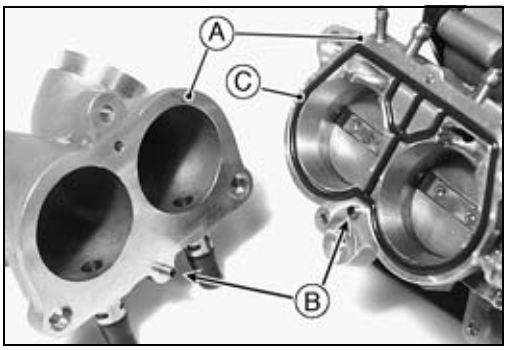

- Turn the throttle pulley [A] to check that the throttle valves [B] move smoothly and return by spring force.

★If the throttle valves do not move smoothly, replace the throttle body.

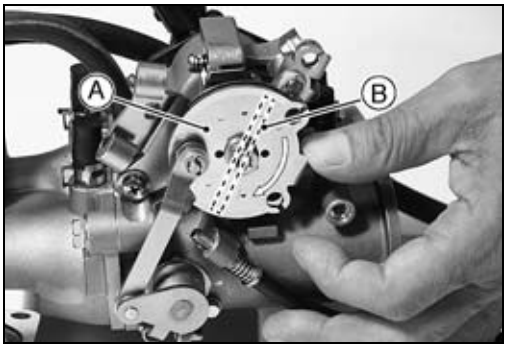

Downloaded from www.vulcanriders-sweden.org

Air Cleaner

Element Removal

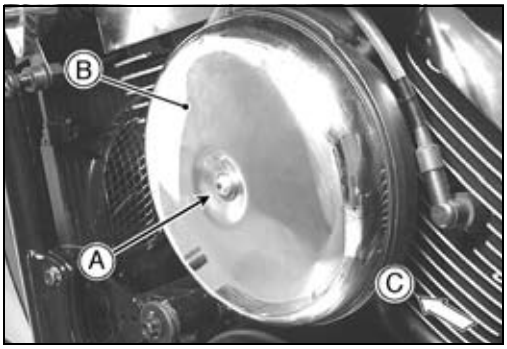

- Remove:
  Allen Bolt and Washer [A]
  Left Air Cleaner Cover [B]
  Front [C]



- Remove the element [A].
- Push a clean, lint-free towel into the lower air cleaner duct to keep dirt or other foreign material from entering.

⚠ WARNING

If dirt or dust is allowed to pass through into the throttle assy, the throttle may become stuck, possibly causing accident.

CAUTION

If dirt gets through into the engine, excessive engine wear and possibly engine damage will occur.

Element Cleaning and Inspection

NOTE

○*In dusty areas, the element should be cleaned more frequently than the recommended interval.*
○*After riding through rain or on muddy roads, the element should be cleaned immediately.*

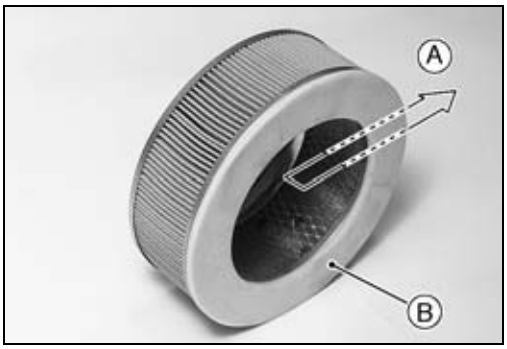

- Remove the air cleaner element (see Element Removal).
- Clean the element by tapping it lightly to loosen dust.
- Blow away the remaining dust by applying compressed air [A] from the inside to the outside (from the clean side to the dirty side).
- Visually check the element for no tears or no breaks and check the sponge gasket [B] also.

★If the element or gasket has any tears or breaks, replace the element.

Left Air Cleaner Housing Removal/Installation

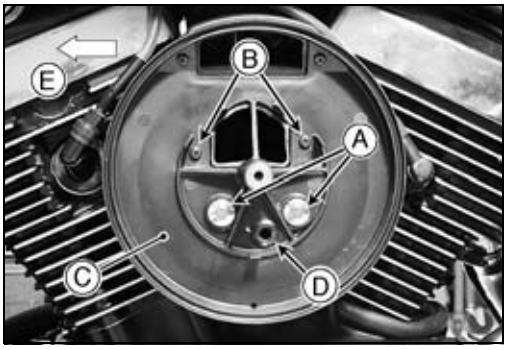

- Remove:
  Air Cleaner Element (see Air Cleaner Element Removal)
  Air Cleaner Base Bolts [A] and Screws [B]
- Remove the air cleaner base [C] and pull out the evaporative emission hose [D] (California Model).
  Front [E]

Downloaded from www.vulcanriders-sweden.org

Air Cleaner

○Be careful not to lose the air cleaner base mounting nuts [A]. These nuts and lower air cleaner duct are sold as a unit.

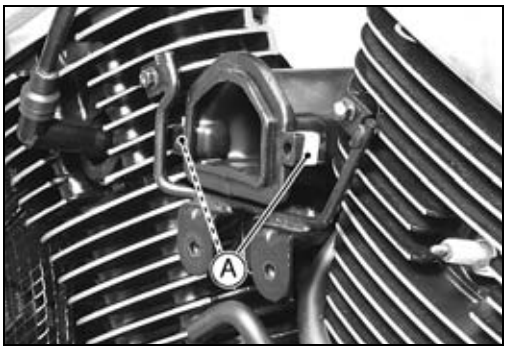

● Apply:

Non-permanent Locking Agent -
Air Cleaner Base Screws

● Tighten:

Torque - Left Air Cleaner Base Bolts: 12 N·m (1.2 kgf·m, 104 in·lb)
Left Air Cleaner Base Screws: 2.2 N·m (0.22 kgf·m, 19 in·lb)
Left Air Cleaner Cover Allen Bolt: 16 N·m (1.6 kgf·m, 12 ft·lb)

Right Air Cleaner Housing Removal

● Remove:
Allen Bolt and Washer [A]
Right Air Cleaner Cover [B]
Front [C]

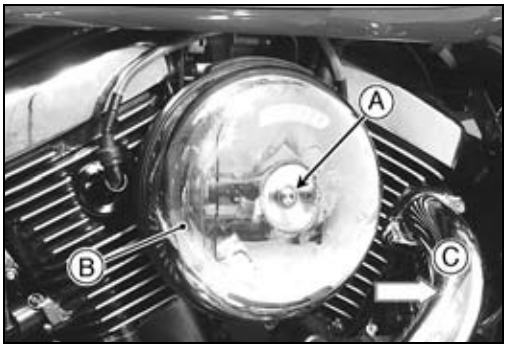

● Remove:
ISC Valve Hoses [A]
ISC Valve Connectors [B]
Air Cleaner Allen Bolts [C] and Screws [D]
Air Cleaner Base Bolt [E]

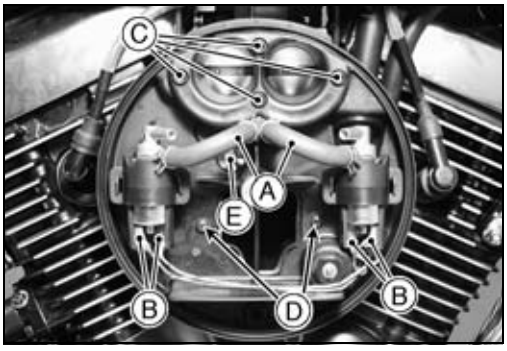

● Remove:
Air Cleaner Base [A]
Inlet Air Temperature Sensor Connector [B]
ISC Valve Leads [C]
Oil Reserve Tank Hose [D]
Air Cleaner Drain Hose [E] (separate from the base [A])
Vacuum Switch Valve Air Hose [F]

○Be careful not to lose the air cleaner base mounting nuts [G]. These nuts and lower air cleaner duct are sold as a unit.

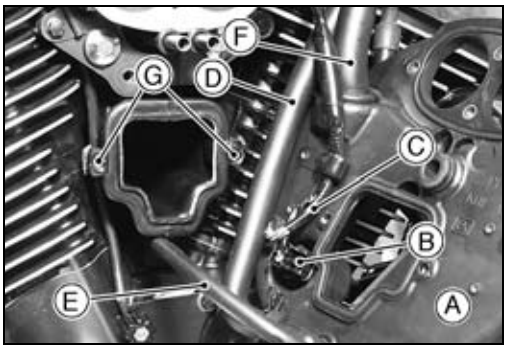

Downloaded from www.vulcanriders-sweden.org

Air Cleaner

Right Air Cleaner Housing Installation

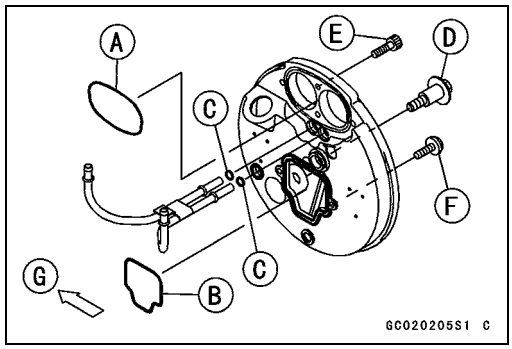

- Check to see that the seals [A], [B] and the ISC pipe O -rings [C] are in place.
- Apply:

Non-permanent Locking Agent -
Right Air Cleaner Base Screws

- Tighten:

Torque - Right Air Cleaner Base Bolt [D]: 12 N·m (1.2 kgf·m, 104 in·lb)
Right Air Cleaner Allen Bolts [E]: 11 N·m (1.1 kgf·m, 95 in·lb)
Right Air Cleaner Base Screws [F]: 2.2 N·m (0.22 kgf·m, 19 in·lb)

Front [G]



★If the air cleaner drain hose [A] has been removed with it attached to the right air cleaner base, pull the drain hose off the right air cleaner base. Remove the left air cleaner base and insert the drain hose under the lower air cleaner duct.

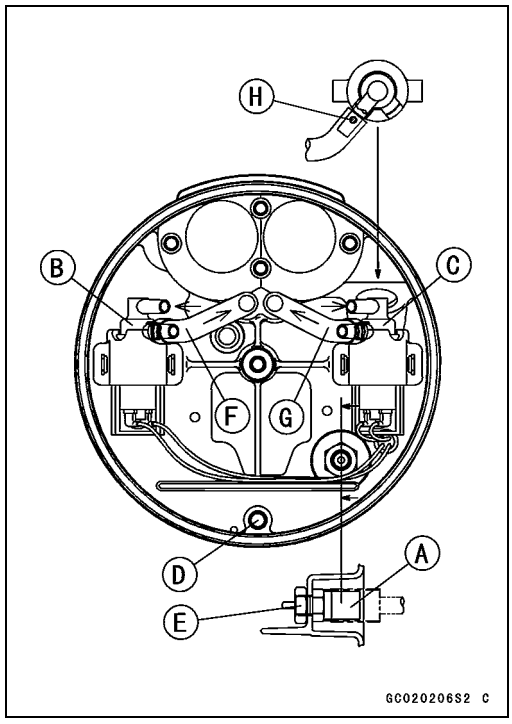

- Install the inlet air temperature sensor [A], the ISC valve #1 [B], ISC valve #2 [C], and the oil reserve tank hose [D].
- Tighten:

Torque - Inlet Air Temperature Sensor Nut [E]: 7.8 N·m (0.80 kgf·m, 69 in·lb)

○The ISC valve #1 is connected to W/R and G/Y leads, and the hose [F] marked red.
○The ISC valve #2 is connected to W/R and G/BL leads, and the hose [G] marked blue.
○The ISC valve #1 and #2 are the same parts.

Top Marks [H]

- Tighten:

Torque - Right Air Cleaner Cover Allen Bolt: 16 N·m (1.6 kgf·m, 12 ft·lb)

Downloaded from www.vulcanriders-sweden.org

Air Cleaner

Lower Air Cleaner Duct Removal

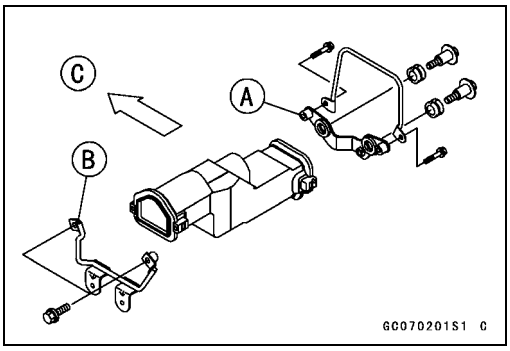

- Remove:
  Right and Left Air Cleaner Housing (see this chapter)
  Throttle Assy Holder [A]
  Air Cleaner Duct Holder [B]
  Throttle Assy (see this chapter)
  Inlet Manifold (see this chapter)
  Front [C]

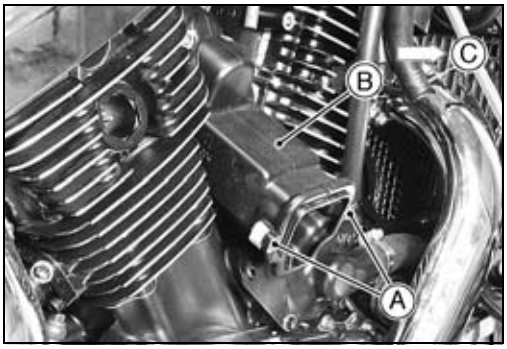

- Remove:
  Right and Left Air Cleaner Base Mounting Nuts [A]
  Lower Air Cleaner Duct [B]
  Front [C]

Downloaded from www.vulcanriders-sweden.org

Fuel Tank

Fuel Tank Removal

⚠ WARNING

Gasoline is extremely flammable and can be explosive under certain conditions. Make sure the area is well-ventilated and free from any source of flame or sparks; this includes any appliance with a pilot light. Do not smoke. Turn the ignition switch OFF. Disconnect the battery (–) terminal.
To avoid fire, do not remove the fuel tank when the engine is still hot. Wait until it cools down.
To make fuel spillage minimum, draw the fuel out from the fuel tank with a pump as much as possible when the engine is cold.
Be prepared for fuel spillage; any spilled fuel must be completely wiped up immediately.

- Turn both ignition switch, and engine stop switch OFF.
- Wait until the engine cools down.
- Open the fuel tank cap [A] to lower the pressure in the tank, and draw the fuel out from the fuel tank with a commercially available pump.

Front [B]

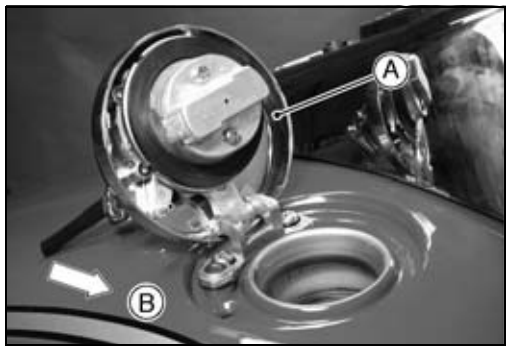

⚠ WARNING

The fuel cannot be removed completely from the fuel tank. Be careful for remained fuel spillage.

- Remove the Allen bolt [A], push the cover [B] forward a little, and take it off from the meter unit.



- Raise the tail [B] of the meter unit [A], and then push the meter unit forward to take it off from the front and rear pins [C]. The meter unit comes off.
- Disconnect the meter connector [D].

CAUTION

Place the meter so that the face is up. If a meter is left upside down or sideways for any length of time, it will malfunction.

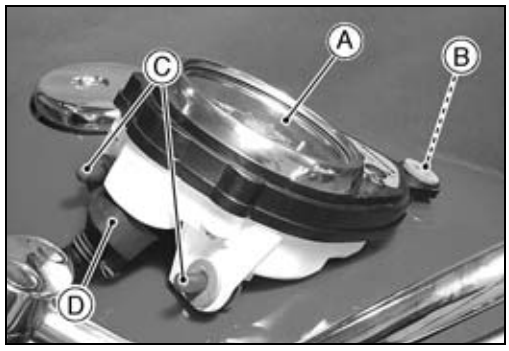

Downloaded from www.vulcanriders-sweden.org

Fuel Tank

- Remove:
  Front Seat (see Frame chapter)
  Fuel Tank Bolt [A]
  Fuel Tank Nut [B]
- Disconnect the battery (–) terminal.



- Raise the lock [B] and disconnect the fuel pump connector [A] (black, 4p).
- Disconnect the fuel level sensor connector [C].

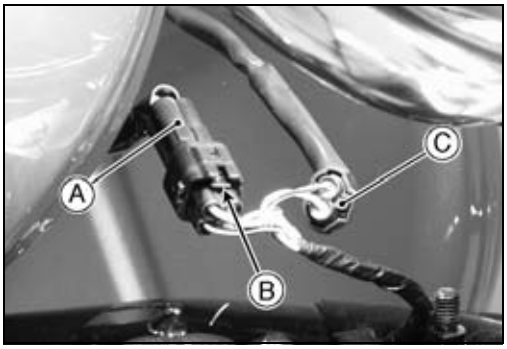

NOTE

○*During tank removal, keep the fuel tank cap [A] open to release pressure in the fuel tank. This makes fuel spillage less.*

Front [B]

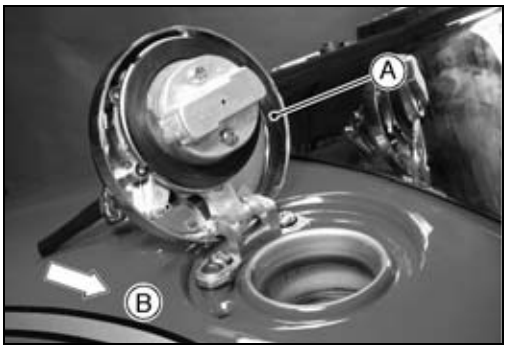

- Prepare rubber hoses of the inside diameter 5 ~ 5.8 mm (0.20 ~ 0.23 in.) (e.g. Rubber Tube: Part No. 92191 -1272) × L about 80 mm (3.15 in.) and make plug hoses [A] of the rubber hose with one end tied with a wire [B].
- Raise the rear of the tank up, and disconnect the hoses on the bottom.
- Plug these pipes [C] with plug hoses to prevent fuel spillage.

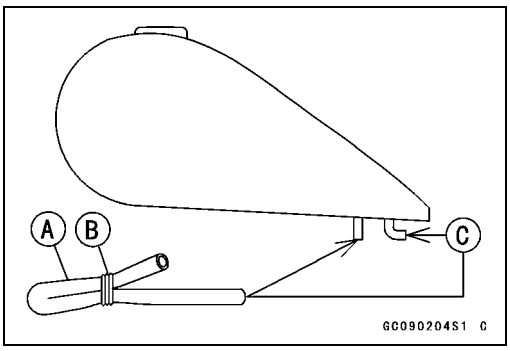

- While lifting the rear of the tank up, stuff a clean shop towel around the fuel inlet fuel hose [B] so that the fuel doesn't leak onto the engine top.
- Slide down the plate clamp [A] and pull the inlet hose off the fuel tank.

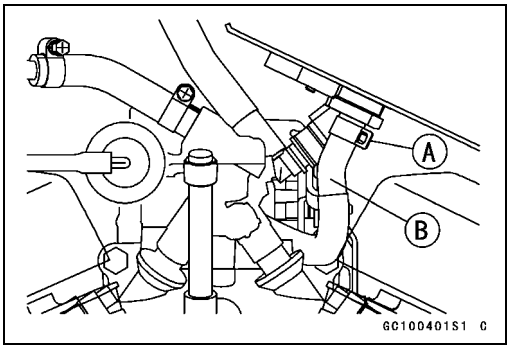

Downloaded from www.vulcanriders-sweden.org

Fuel Tank

- Prepare a ϕ8 mm plug (ϕ7.8 ~ 8.0 mm [A] × L 35 mm (1.38 in.) [B] with a rounded end [C]), and a 7.3 ~ 7.5 mm (0.20 ~ 0.23 in.) inside diameter fuel hose [D] (e.g. Part No. 92191-1264).

○The ϕ8 mm plug can be made by cutting the threaded portion off a ϕ8 mm bolt [F] (e.g. Part No. 92151-1444). Do not leave the threaded portion.

○Make a plug hose × L about 100 mm of the fuel hose with one end tied with a wire [E].

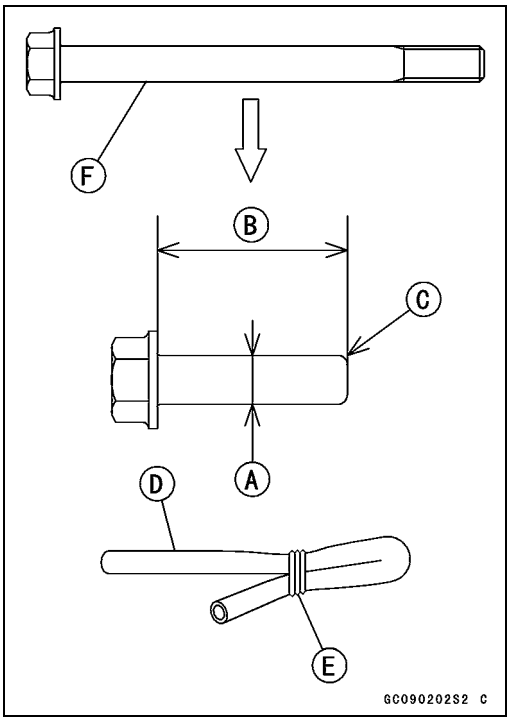

⚠ WARNING

Check the outer circumference of the ϕ8 mm plug for no threads, no burrs, no sharp edges, and no rust. Since these defects spoil the O-rings in the fuel hose joint, causing fuel leak and leading to accident.

- Raise the fuel tank [A] up, and make sure that the shop towel [B] is around the fuel outlet hose joint [C].
- A person should pinch the hose joint locks [D] with fingers, disconnect the joint [E], and quickly plug the tank outlet pipe with the plug hose, while another person should plug the joint with the ϕ8 mm plug [G].

Front [F]

○Remove the high pressure fuel hose, and quickly install the plug hose, and ϕ8 mm plug.

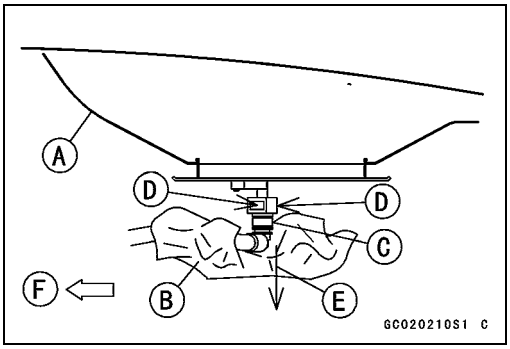

⚠ WARNING

Immediately wipe up fuel that spills.

Downloaded from www.vulcanriders-sweden.org

Fuel Tank

● Close the fuel tank cap.
● Remove the fuel tank from the vehicle, and place it on a flat surface.

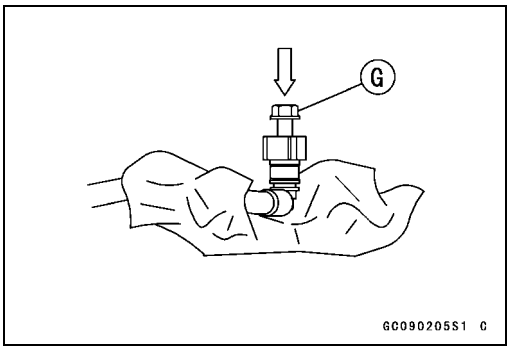

CAUTION

For California model, if gasoline, solvent, water or any other liquid enters the canister, the canister's vapor absorbing capacity is greatly reduced. If the canister does become contaminated, replace it with a new one.

● For California Model, note the following:
○To prevent the gasoline from flowing into or out of the canister, hold the separator perpendicular to the ground.
○Be sure to plug the return hose to prevent fuel spilling before fuel tank removal.

⚠ WARNING

For California model, be careful not to spill the gasoline through the return hose. Spilled fuel is hazardous.

★If liquid or gasoline flows into the breather hose, remove the hose and blow it clean with compressed air (California model).

○Be careful of fuel spillage from the fuel tank since fuel still remains in the fuel tank and fuel pump.

⚠ WARNING

Store the fuel tank in an area which is well -ventilated and free from any source of flame or sparks. Do not smoke in this area. Place the fuel tank on a flat surface and plug the fuel pipes to prevent fuel leakage.

Fuel Tank Installation
● Read the above WARNING.
● Route the hoses correctly (see General Information chapter).
● For California Model, note the following:
○To prevent the gasoline from flowing into or out of the canister, hold the separator perpendicular to the ground.
○Connect the hoses according to the diagram of the system (see the last page of this chapter or Cable, Wire, and Hose Routing section in the General Information chapter). Make sure they do not get pinched or kinked.
○Route hoses with a minimum of bending so that the air or vapor will not be obstructed.

Downloaded from www.vulcanriders-sweden.org

Fuel Tank

● Check that the rubber dampers [A] are in place.
★If the dampers are damaged or deteriorated, replace them.
○Remove the plug hoses, and ϕ8 mm plug, then quickly install the fuel hoses one by one.
● Be sure the hoses are clamped securely to prevent leakage.

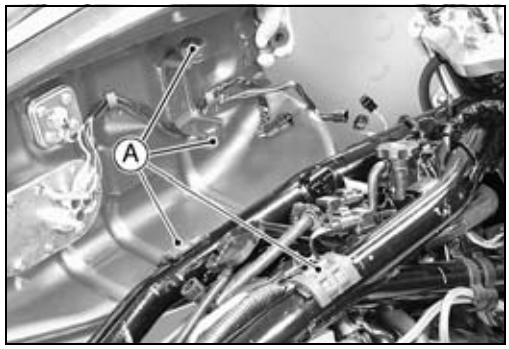

● When the high pressure fuel hose is installed, note the following.
○Fit the high pressure fuel hose joint [A] onto the pipe until the joint clicks [B].
○Insert the high pressure fuel hose joint straight along the pipe.

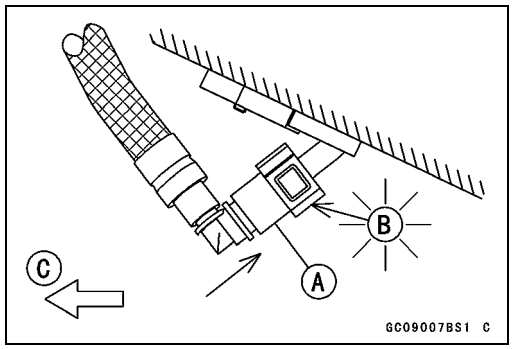

○Pull the high pressure fuel hose joint [A] down [B] and make sure it is locked and does not come off.

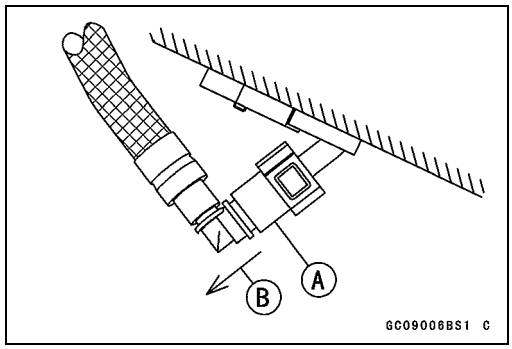

● Fit the fuel return hose [A] onto the pipe fully and install the plate clamp [B] beyond the raised rib [C].

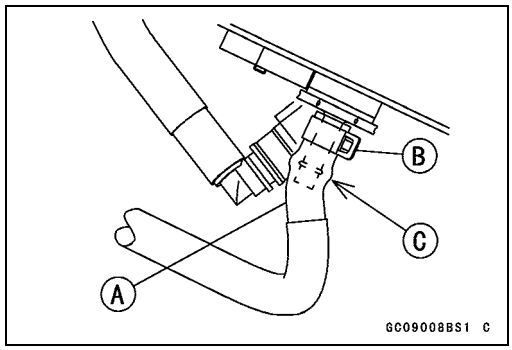

● Connect:
Fuel Level Sensor Connector [A]
Fuel Pump Connector [B]
Battery (–) Lead Connector
● Install the meter unit (see Electrical System chapter).

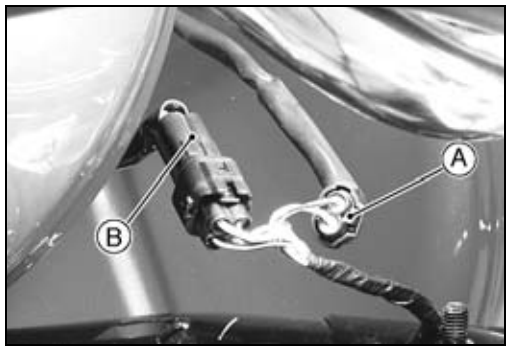

Downloaded from www.vulcanriders-sweden.org

Fuel Tank

Fuel Tank and Cap Inspection

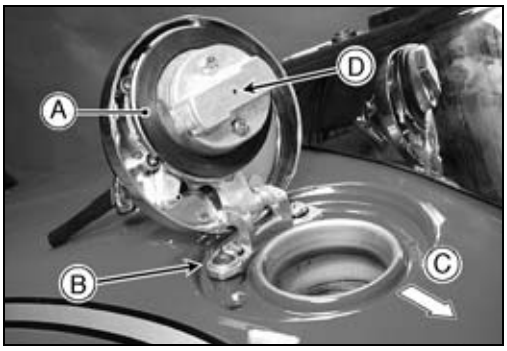

- Visually inspect the gasket [A] on the tank cap for any damage.

★Replace the gasket if it is damaged.

- Check to see if the breather pipe [B] in the tank is not clogged.

★If the breather pipe is clogged, blow the breather free with compressed air.

★If the tank cap breather is clogged, replace the tank cap.

Front [C]

CAUTION

Do not apply compressed air to the air vent holes [D] in the tank cap. This could damage and clog the labyrinth in the cap.

Fuel Tank Cleaning

⚠ WARNING

Clean the tank in a well-ventilated area, and take care that there are no sparks or flame anywhere near the working area. Because of the danger of highly flammable liquids, do not use gasoline or low-flash point solvent to clean the tank.

- Remove the fuel tank (see Fuel Tank Removal).
- Remove the fuel pump and the return fuel check valve from the fuel tank (see In-tank Fuel Pump section in this chapter).
- Fill the fuel tank with some high-flash point solvent, and shake the tank to remove dirt and fuel deposits.
- Draw the solvent out of the tank.
- Dry the tank with compressed air.
- Install the return fuel check valve (see Return Fuel Check Valve Inspection) and the fuel pump on the fuel tank (see Fuel Pump Installation).
- Install the fuel tank (see Fuel Tank Installation).

Return Fuel Check Valve Inspection



- Remove the fuel tank (see Fuel Tank Removal).
- Place the fuel tank upside down.
- Unscrew the check valve [A].

Downloaded from www.vulcanriders-sweden.org

Fuel Tank

● Check to see if the valve [A] slides smoothly when pushing it in with a wooden or other soft rod, and see if it comes back to its seat by pressure of the spring [B].

NOTE

○*Inspect the valve in its assembled state. Disassembly and assembly may change the valve performance.*

CAUTION

Do not try to move the valve through the side hole [C]. This could damage the O-ring [D], or spoil the valve operation.

★If any rough spots are found during above inspection, wash the valve clean with a high-flash point solvent and blow out any foreign particles that may be in the valve with compressed air in a well-ventilated area.

○Take care that there is no spark or flame anywhere near the working area.

★If cleaning does not solve the problem, replace the check valve as an assembly along with the gasket.

● Tighten:

Torque - Return Fuel Check Valve: 20 N·m (2.0 kgf·m, 14 ft·lb)

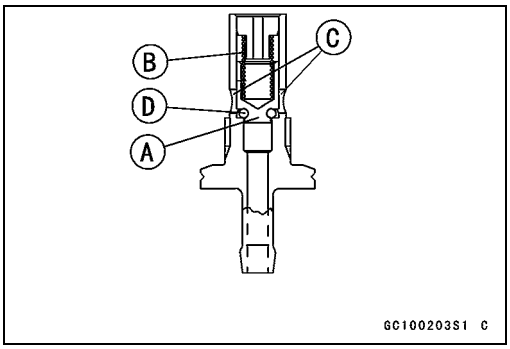

Downloaded from www.vulcanriders-sweden.org

Evaporative Emission Control System

The Evaporative Emission Control System for California Model routes fuel vapors from the fuel system into the running engine or stores the vapors in a canister when the engine is stopped. Although no adjustments are required, a thorough visual inspection must be made at the intervals specified by the Periodic Maintenance Chart.

Parts Removal/Installation

⚠ WARNING

Gasoline is extremely flammable and can be explosive under certain conditions. Make sure the area is well-ventilated and free from any source of flame or sparks; this includes any appliance with a pilot light. Do not smoke. Turn the ignition switch OFF.

CAUTION

If gasoline, solvent, water or any other liquid enters the canister, the canister's vapor absorbing capacity is greatly reduced. If the canister does become contaminated, replace it with a new one.

- To prevent the gasoline from flowing into or out of the canister, hold the separator perpendicular to the ground.
- Be sure to plug the return hose to prevent fuel spilling before fuel tank removal.

⚠ WARNING

When removing the fuel tank, be careful not to spill the gasoline through the return hose. Spilled fuel is hazardous.

★If liquid or gasoline flows into the breather hose, remove the hose and blow it clean with compressed air.

- Connect the hoses according to the diagram of the system (see the last page of this section or Cable, Wire, and Hose Routing section in the General Information chapter). Make sure they do not get pinched or kinked.
- Route hoses with a minimum of bending so that the air or vapor will not be obstructed.

Canister Inspection (Periodic Inspection)

- Remove the left side cover and the tool box (see Frame chapter).
- Remove the band [A] and take out the canister [B].
- Visually inspect the canister for cracks and other damage.

★If the canister has any cracks or bad damage, replace it with a new one.

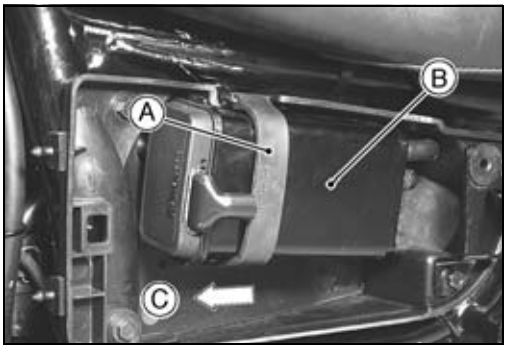

NOTE

○*The canister is designed to work well through the motorcycle's life without any maintenance if it is used under normal conditions.*

- Install the canister parallel to the ground.
  Front [C]

Hose Inspection (Periodic Inspection)

- Check that the hoses are securely connected.
- Replace any kinked, deteriorated or damaged hoses.

Downloaded from www.vulcanriders-sweden.org

Evaporative Emission Control System

Separator Inspection (Periodic Inspection)

- Disconnect the hoses from the liquid/vapor separator, and remove the separator from the motorcycle.
- Visually inspect the separator for cracks and other damaged.

★If the separator has any cracks or damage, replace it with a new one.

Separator Operation Test

⚠ WARNING

Gasoline is extremely flammable and can be explosive under certain conditions. Make sure the area is well-ventilated and free from any source of flame or sparks; this includes any appliance with a pilot light. Do not smoke. Turn the ignition switch OFF.

- Remove the front seat and left side cover (see Frame chapter).
- Connect the hoses to the separator.
- Disconnect the breather hose from the separator, and inject about **20 mL (0.68 US oz)** of gasoline [A] into the separator [B] through the hose fitting.
- Disconnect the fuel return hose [C] from the fuel tank [D]
- Run the open end of the return hose into the container level with the tank top [E].
- Start the engine, and let it idle.

★If the gasoline in the separator comes out of the hose, the separator works well. If it does not, replace the separator with a new one.

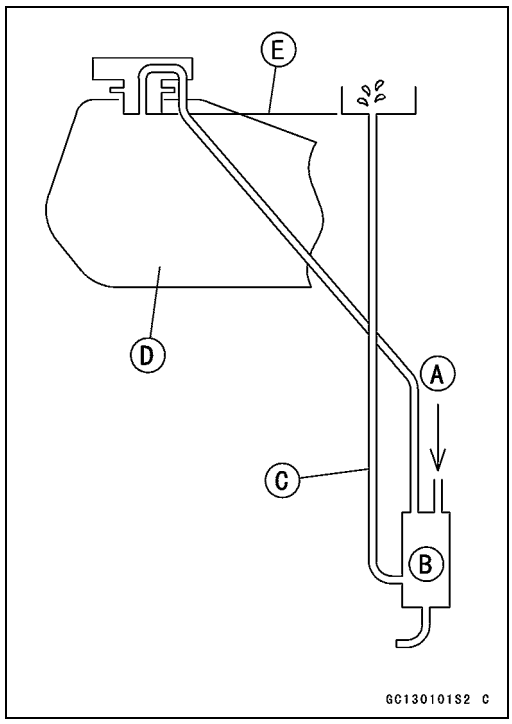

Downloaded from www.vulcanriders-sweden.org

Evaporative Emission Control System

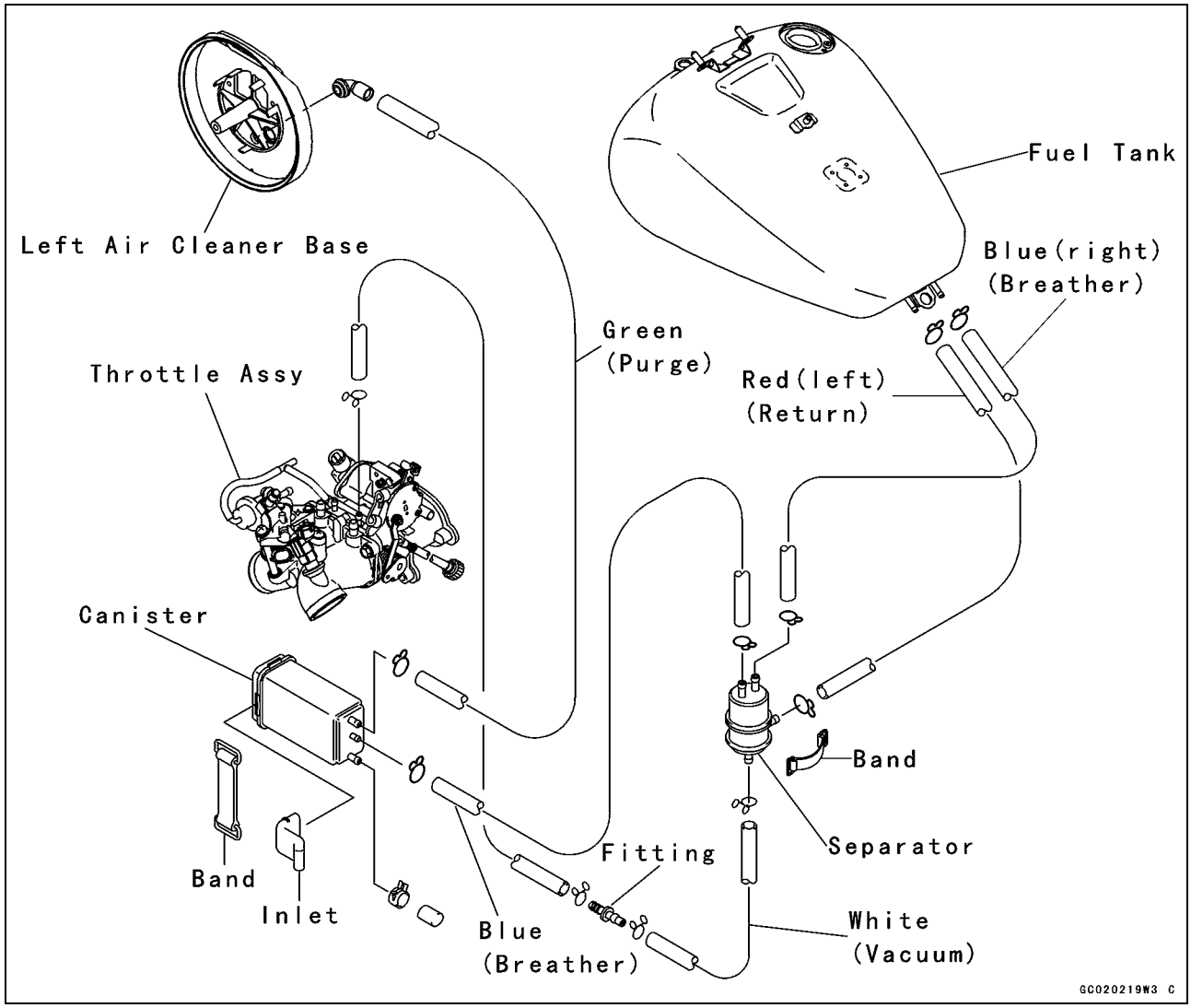

Downloaded from www.vulcanriders-sweden.org

Troubleshooting the DFI System

Outline

When an abnormality in the system occurs, the FI indicator LED (Light Emitting Diode) light goes on to alert the rider on the meter panel. In addition, the condition of the problem is stored in the memory of the ECU (electronic control unit). With the engine stopped and turned in the self-diagnosis mode, the fault code [A] is indicated by the number of times the FI indicator LED light blinks.

When due to a malfunction, the FI indicator LED light remains lit, ask the rider about the conditions [B] under which the problem occurred and try to determine the cause [C]. Don't rely solely on the DFI self-diagnosis function, use common sense; first conduct a pre-diagnosis inspection, check the ECU for ground and power supply, the fuel line for no fuel leaks, and for correct pressure. The pre-diagnosis items are not indicated by the FI indicator LED light.

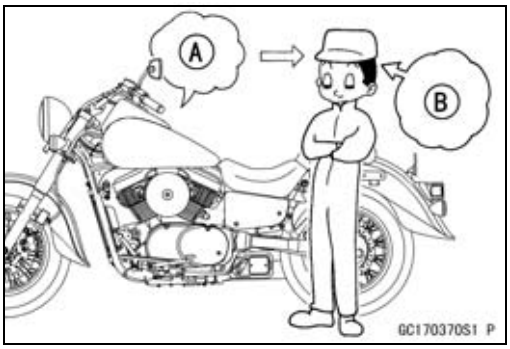

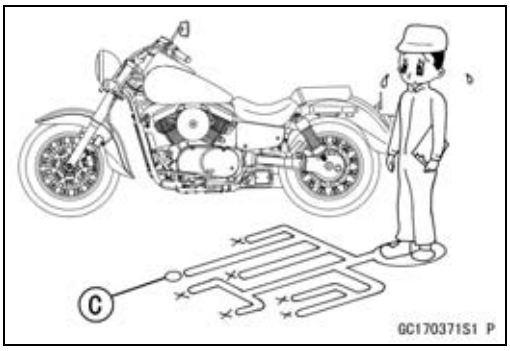

Even when the DFI system is operating normally, the FI indicator LED light [A] may light up under strong electrical interference. No remedy needed. Turn the ignition switch OFF to stop the indicator light.

When the FI indicator LED light goes on and the motorcycle is brought in for repair, check the fault codes.

When the repair has been done, the LED light will not show the fault code any more.

Much of the DFI system troubleshooting work consists of confirming continuity of the wiring. The DFI parts are assembled and adjusted with precision, and it is impossible to disassemble or repair them.



- When checking the DFI parts, use a digital meter which can be read two decimal places voltage or resistance.

○The DFI part connectors [A] have seals [B], including the ECU (except for ISC valves). When measuring the input or output voltage with the connector joined, insert the needle adapter (special tool) [C] inside the seal from behind the connector until the adapter reaches the terminal.

Special Tool - Needle Adapter Set: 57001-1457

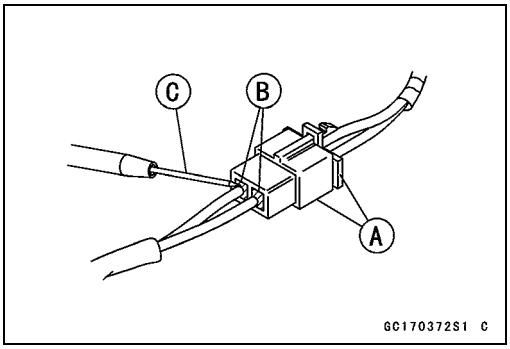

CAUTION

Insert the needle adapter straight along the lead in the connector to prevent short-circuit between terminals.

Downloaded from www.vulcanriders-sweden.org

Troubleshooting the DFI System

- Make sure that measuring points are correct in the connector before mesurement. Do not reverse connections of the hand tester or a digital meter.
- Be careful not to short-circuit the leads of the DFI or electrical system parts by contact between adapters.

CAUTION
Incorrect, reverse connection or short circuit by needle adapters could damage the DFI or electrical system parts.

○After measurement, remove the needle adapters and apply silicone sealant to the seals [A] of the connector [B] for waterproofing.

Silicone Sealant- Kawasaki Bond: 56019-120

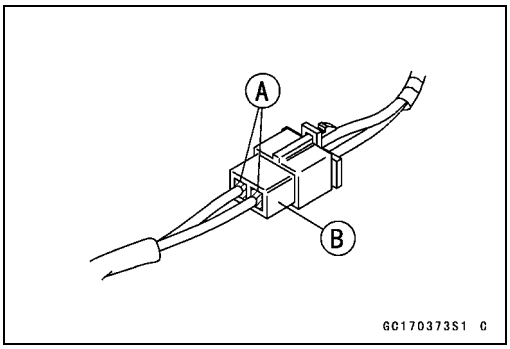

- Always check battery condition before replacing the DFI parts. A fully charged battery is a must for conducting accurate tests of the DFI system.
- Trouble may involve one or in some cases all items. Never replace a defective part without determining what CAUSED the problem. If the problem was caused by some other item or items, they too must be repaired or replaced, or the new replacement part will soon fail again.
- Measure coil winding resistance when the DFI part is cold (at room temperature)
- Do not adjust or remove the throttle sensor.
- Do not directly connect a 12 V battery to a fuel injector. Insert a resistor (5 ~ 7 Ω) or a bulb (12 V × 3 ~ 3.4 W) in series between the battery and the injector.
- The DFI parts have been adjusted and set with precision. Therefore, they should be handled carefully, never strike sharply, as with a hammer, or allowed to fall. Such a shock to the parts can damage them.
- Check wiring and connections from the ECU connector to the suspected faulty DFI parts, using the hand tester (special tool, analog tester) rather than a digital tester.

Special Tool - Hand Tester: 57001-1394

- Make sure all connectors in the circuit are clean and tight, and examine wires for signs of burning, fraying, etc. Deteriorated wires and bad connections can cause reappearance of problems and unstable operation of the DFI system.

★If any wiring is deteriorated, replace the wiring.

- Pull each connector [A] apart and inspect it for corrosion, dirt, and damage.

★If the connector is corroded or dirty, clean it carefully. If it is damaged, replace it. Connect the connectors securely.

- Check the wiring for continuity.

○Use the wiring diagram to find the ends of the lead which is suspected of being a problem.
○Connect the hand tester between the ends of the leads.
○Set the tester to the × 1 Ω range, and read the tester.
★If the tester does not read 0 Ω, the lead is defective. Replace the lead.

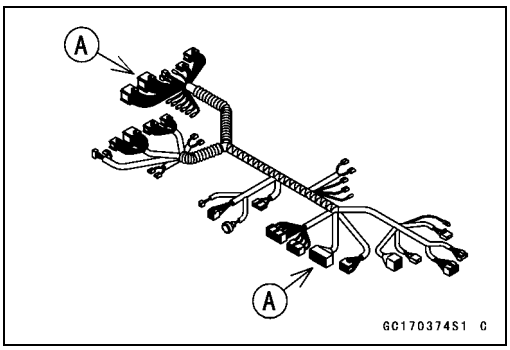

Downloaded from www.vulcanriders-sweden.org

Troubleshooting the DFI System

○If both ends of a harness [A] are far apart, ground [B] the one end [C], using an auxiliary lead [D] and check the continuity between the end [E] and the ground [F]. This enables to check a long harness for continuity. If the harness is open, repair or replace the harness.

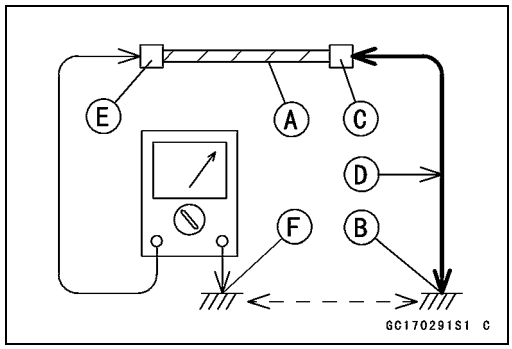

○When checking a harness [A] for short circuit, open one end [B] and check the continuity between the other end [C] and ground [D]. If there is continuity, the harness has a short circuit to ground, and it must be repaired or replaced.

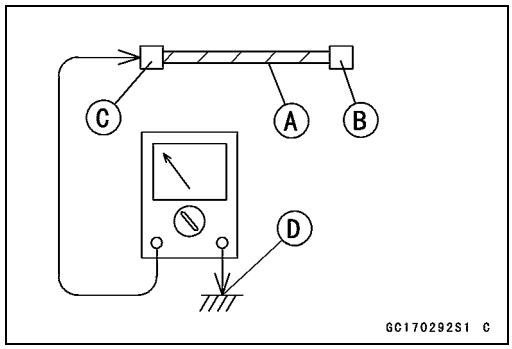

● Narrow down suspicious locations by repeating the continuity tests from the ECU connectors.
★If no abnormality is found in the wiring or connectors, the DFI parts are the next likely suspects. Check the part, starting with input and output voltages. However, there is no way to check the ECU itself.
★If an abnormality is found, replace the affected DFI part.
★If no abnormality is found in the wiring, connectors, and DFI parts, replace the ECU.
○The following diagnosis flow chart illustrates the above procedures.
○After inspection, be sure to connect all the DFI electrical connectors. Do not turn the ignition switch ON while the DFI electrical connectors and ignition system connectors are disconnected. Otherwise, the ECU memorizes fault codes as open circuit.

○Wire Color Codes:

BK: Black	G: Green	P: Pink
BL: Blue	GY: Gray	PU: Purple
BR: Brown	LB: Light blue	R: Red
CH: Chocolate	LG: Light green	W: White
DG: Dark green	O: Orange	Y: Yellow

Downloaded from www.vulcanriders-sweden.org

Troubleshooting the DFI System

○Electrical Connectors:
Connectors [A]

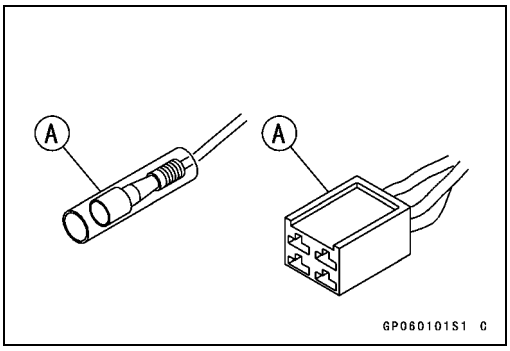

Connectors [B]

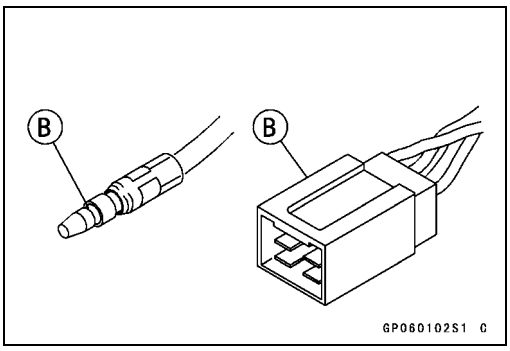

Downloaded from www.vulcanriders-sweden.org

Troubleshooting the DFI System

DFI Diagnosis Flow Chart

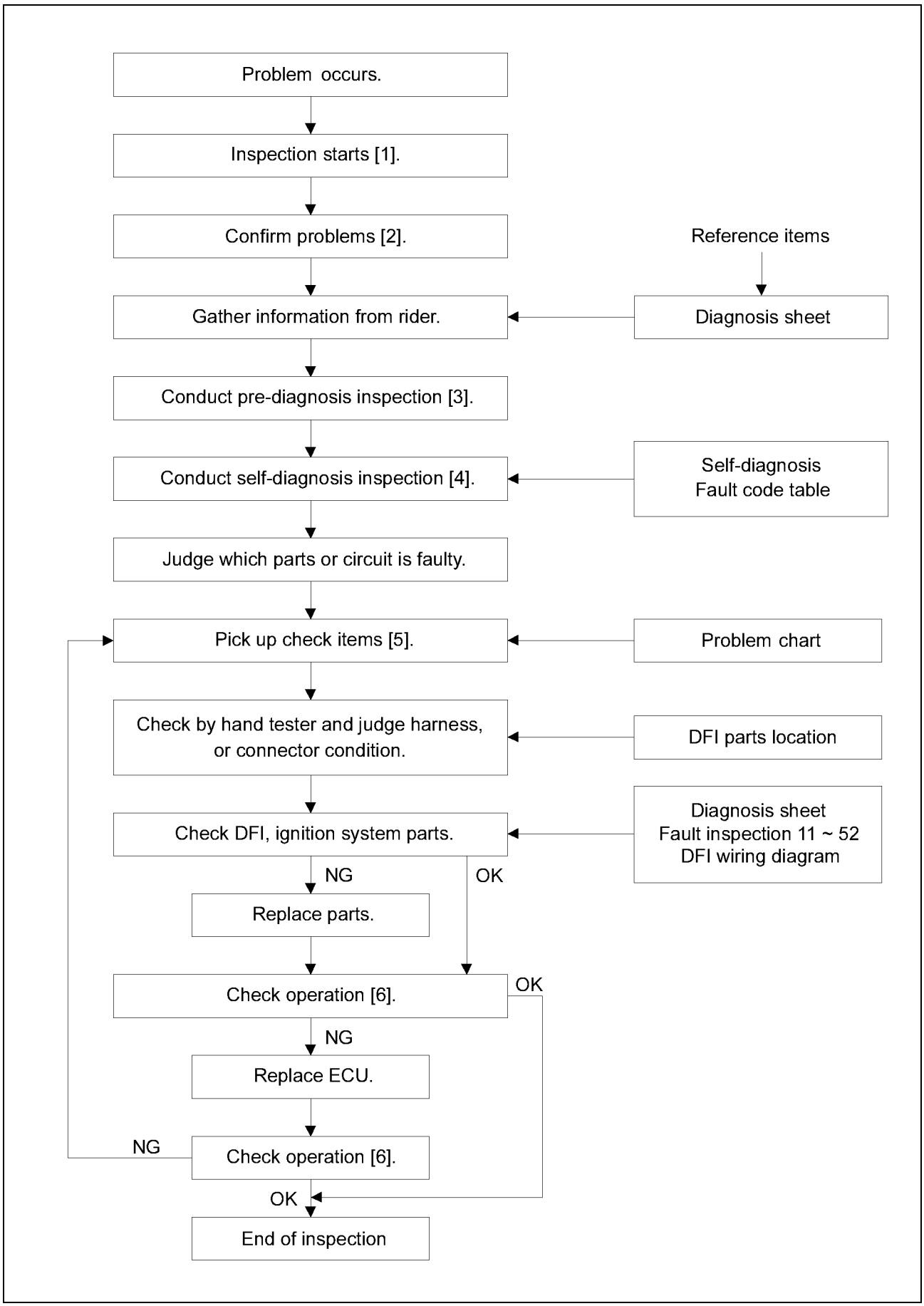

Downloaded from www.vulcanriders-sweden.org

Troubleshooting the DFI System

NOTE

○*OK: No problem.*
○*NG: Problem exists.*

1. Inspection starts.
   - An abnormality occurs in the DFI system, and the FI indicator LED light goes on to alert the rider.
   - Bring the motorcycle into the shop.
2. Confirm problems.
   - Reproduce the problems if possible.
3. Conduct pre-diagnosis inspection.
   - The pre-diagnosis inspection items are not handled by self-diagnosis. Check the problem before self-diagnosis, considering the symptoms of the problem.
   - Pre-diagnosis Inspection Items:

     ECU Power Supply Inspection
     DFI Fuse Inspection
     DFI Main Relay Inspection
     FI Indicator LED Light Operation Inspection
     ISC Valve Inspection
     Fuel Pressure Inspection
     Fuel Flow Rate Inspection
4. Conduct self-diagnosis.
   - Enter the self-diagnosis mode and count the blinks of the FI indicator LED light to read the fault code.
   - Guess which parts or circuit is faulty, refering to the problem chart.
5. Check items.
   - Decide the check items about the faulty part, refering to the problem chart.
   - Decide the check procedure for each faulty part, referring to each section (Fault Inspection 11 ~ 52).
6. Operation check.
   - Make sure the FI indicator LED light goes off.
   - ⋆ If the problem is related to startability or idle stability, idle the engine to confirm that the DFI system and the ignition system are operating correctly.
   - ⋆ If the problem is related to driveability, ride the motorcycle [A] at 30 km/h (18 mph) or above to confirm that the DFI system and the ignition system are operating correctly.

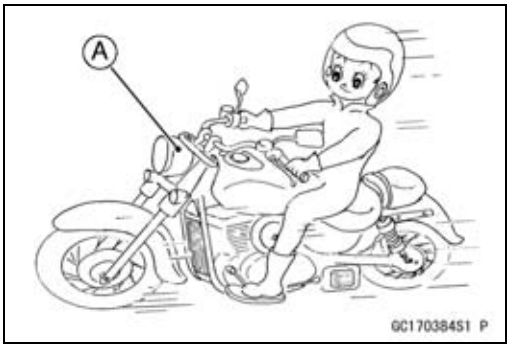

Downloaded from www.vulcanriders-sweden.org

Troubleshooting the DFI System

Problem Chart

Problems	Startability		Idling stability			Driveability							M	O
Inspection items	A	B	C	D	E	F	G	H	I	J	K	L	N	
ECU ground and power supply	1 (1)													C2
Ignition Switch, engine stop Switch	2 (2)													C2*, C15*
Spark plug #1, #2	3 (3)	4 (5)												C15
ISC valve #1, #2		5 (6)	1 (1)	2 (2)	2 (2)									C2
In-tank fuel pump	4 (4)	1 (1)			1 (1)	1 (1)	1 (1)				1 (1)			C2
Fuel pressure		2 (2)	3 (3)		5 (5)	3 (3)	3 (3)	2 (2)	2 (2)		2 (2)			C2
Fuel injector #1, #2	8 (8)	3 (3)	2 (2)		3 (3)	2 (2)	2 (2)	1 (1)	1 (1)				1	C2
Water temperate sensor		(4)	5 (4)	1 (1)	4 (4)	6 (6)	5 (5)	4 (4)	3 (3)		6 (6)	3 (3)		C2
Throttle sensor						5 (5)		3 (3)			4 (4)			C2
Inlet air temperature sensor			4			4 (4)	4 (4)			1 (1)	5 (5)	2 (2)		C2
Atmospheric pressure sensor			6			7 (7)	6 (6)			2 (2)	7 (7)	4 (4)		C2
Vacuum sensor						8 (8)	8 (8)	5 (5)			8 (8)	5 (5)		C2
Vehicle-down sensor	5 (5)													C2
Pickup coil #1, #2	6 (6)	6 (7)			6 (6)						3 (3)	1 (1)		C2, C15
Ignition coil #1, #2	7 (7)				7 (7)		7 (7)			3 (3)				C2, C15

NOTE

○*The ECU often participates in these problems. So if the parts, and the circuit have been checked out good, the ECU must be replaced.*

1, 2, 3 ..... : Inspection order when engine is hot.
(1), (2), (3) ..... : Inspection order when engine is cold.
C2*: DFI wiring diagram in this chapter (chapter 2)
C15*: Wiring diagram in the Electrical System chapter (chapter 15)

Startability

(A): The starter motor rotates the engine but there is no combustion and the engine doesn't start.
(B): ●There is combustion, but the engine stops immediately.
●You need to push the starter button long to start the engine.

Downloaded from www.vulcanriders-sweden.org

Troubleshooting the DFI System

Idling stability

(C): Unstable idling (rough idling)

●The idle speed fluctuates. This can be identified by engine sound or vibration.

(D): Incorrect idle speed

●The idle speed cannot be adjusted within the specified range.

(E): Lack of idling consistency

●The engine cannot maintain idling. The following two symptoms are found.

The engine stops when closing the throttle.

The engine stops when opening the throttle.

Driveability

(F): Hesitation

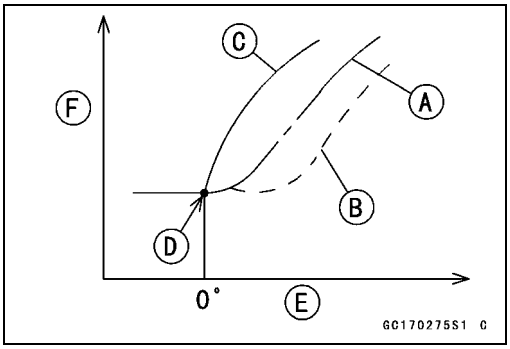

Hesitation [A]

Severe Hesitation [B]

Normal [C]

Beginning [D] of Opening the Throttle

Throttle Opening [E]

Motorcycle Speed [F]

(G): Poor acceleration

The motorcycle runs smoothly, but cannot accelerate in response to throttle opening, and cannot reach maximum speed.

(H): Stumble

When the motorcycle is about to accelerate, the engine speed cannot increase in responce to throttle opening, and increases with a lag [B] at opening [C] the throttle.

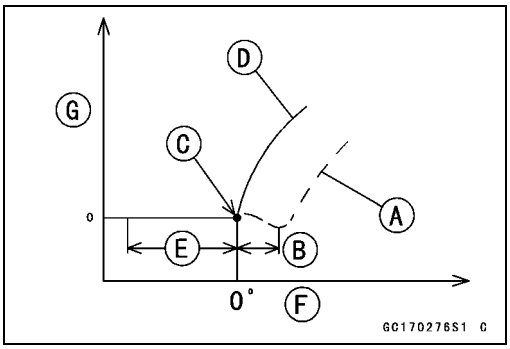

Stumble [A]

Normal [D]

Idling [E]

Opening the throttle [F]

Motorcycle Speed [G]

Downloaded from www.vulcanriders-sweden.org

Troubleshooting the DFI System

(I): Surge
A forward and backward, periodic movement of a motorcycle at acceleration, deceleration, or at cruising.

(J): Knock
A periodic, rattling, thumping or pounding noise caused by spontaneous ignition of the air-fuel mixture in a cylinder, leading to engine damage. Knocking can also be caused by a connecting rod bearing, uneven combustion, or incorrect fuel.

(K): Backfire
An explosion of unburned or partially burned fuel in an inlet pipe caused by incomplete combustion in the cylinder head, leaner air-fuel mixture, wrong valve timing, vacuum switch broken, or air suction trouble, mainly during decelerating.

(L): Afterfire
An explosion of gases accumulated in a muffler caused by incomplete combustion in the cylinder head, wrong plug gap, burned electrode, or richer fuel/air mixture. Also it is caused by delayed ignition during starting or during decelerating, resulting in an explosion after the end of the combustion.

Engine doesn't stop (M)

(N): Run-on (dieseling)
Continuous running of an engine with the ignition switch OFF.

(O): Reference chapters

Inquiries to Rider

● Refer to the next diagnosis chart.

○Each rider reacts to problems in different ways, so it is important to confirm what kind of symptoms the rider has encountered.

○Try to find out exactly what problem occured under exactly what conditions by asking the rider; knowing this information may help you reproduce the problem.

○The diagnosis sheet will help prevent you from overlooking any areas, and will help you decide if it is a DFI system problem, or a general engine problem.

Diagnosis Keys

What-	Motorcycle Model
When-	Date or frequency of problem
Where-	Road conditions, altitude
How-	Riding conditions
	Environment

Downloaded from www.vulcanriders-sweden.org

Troubleshooting the DFI System

Sample Diagnosis Sheet

Rider name	**Registration No. (license plate No.)**	**Year of initial registration**
Model	**Engine No.**	**Frame No.**
Date problem occured		**Mileage**
Environment when problem occurred.		
Weather	☐ fine, ☐ cloudy, ☐ rain, ☐ snow, ☐ always, ☐ other:	
Temperature	☐ hot, ☐ warm, ☐ cold, ☐ very cold, ☐ always	
Problem frequency	☐ chronic, ☐ often, ☐ once	
Road	☐ street, ☐ highway, ☐ mountain road (☐ uphill, ☐ downhill), ☐ bumpy, ☐ pebble	
Altitude	☐ normal, ☐ high (about 1 000 m or more)	
Motorcycle conditions when problem occurred.		
FI indicator LED light	☐ light up immediately after ignition switch ON, and goes off after 1 ~ 2 seconds (normal).	
	☐ lights up immediately after ignition switch ON, and stays on (DFI problem)	
	☐ lights up immediately after ignition switch ON, but goes off after about 10 seconds (DFI problem).	
	☐ unlights (LED light, ECU or its wiring fault).	
	☐ sometimes lights up (probably wiring fault).	
Starting difficulty	☐ starter motor not rotating.	
	☐ starter motor rotating but engine doesn't turn over.	
	☐ starter motor and engine don't turn over.	
	☐ no fuel flow (☐ no fuel in tank, ☐ no fuel pump sound).	
	☐ engine flooded (do not crank engine with throttle opened, which promotes engine flooding).	
	☐ no spark.	
	☐ choke knob is not pulled fully when using the knob (pull it fully when using).	
	☐ other:	
Engine stops	☐ right after starting.	
	☐ when opening throttle grip.	
	☐ when closing throttle grip.	
	☐ when moving off.	
	☐ when stopping the motorcycle.	
	☐ when cruising.	
	☐ other:	

Downloaded from www.vulcanriders-sweden.org

Troubleshooting the DFI System

Rider name	**Registration No. (license plate No.)**	**Year of initial registration**
Model	**Engine No.**	**Frame No.**
Date problem occured		**Mileage**
Poor running at low speed	☐ choke knob left pulled out fully (push it in fully).	
	☐ very low fast idle speed.	
	☐ very low idle speed, ☐ very high idle speed, ☐ rough idle speed.	
	☐ battery voltage is low (charge the battery).	
	☐ spark plug loose (tighten it).	
	☐ spark plug dirty, broken, or gap maladjusted (remedy it).	
	☐ backfiring.	
	☐ afterfiring.	
	☐ hesitation when acceleration.	
	☐ engine oil viscosity too high.	
	☐ brake dragging.	
	☐ engine overheating.	
	☐ clutch slipping.	
	☐ other:	
Poor running or no power at high speed	☐ choke knob left pulled out fully (push it in fully).	
	☐ spark plug loose (tighten it).	
	☐ spark plug dirty, broken, or gap maladjusted (remedy it).	
	☐ spark plug incorrect (replace it).	
	☐ knocking (fuel poor quality or incorrect, → use high-octane gasoline).	
	☐ brake dragging.	
	☐ clutch slipping.	
	☐ engine overheating.	
	☐ engine oil level too high.	
	☐ engine oil viscosity too high.	
	☐ other:	

Downloaded from www.vulcanriders-sweden.org

ECU

CAUTION

Never drop the ECU, especially on a hard surface. Such a shock to the ECU can damage it.

ECU Removal

- Remove:
  Front Seat (see Frame chapter)
  Battery Holder [A] and Screw [B]
- Pull the ECU [C] out.

★If necessary, disconnect the ECU connectors.
Front [D]

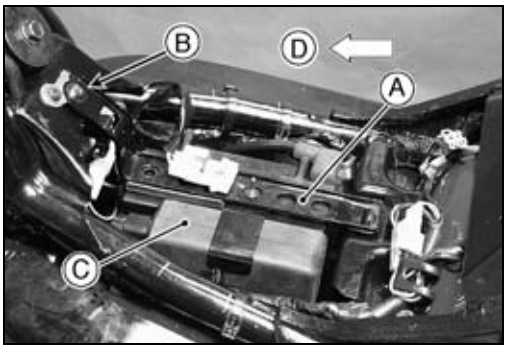

ECU Installation

- Connect the ECU connectors.

○Be sure to connect the harness connectors to the ECU connectors of the same color;
Black Female ←→ Black Male [A]
White Female ←→ White Male [B].

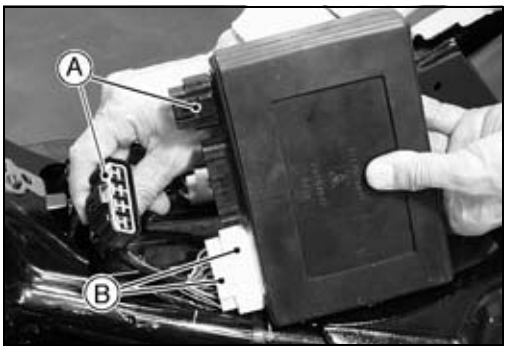

- Put the ECU [A] into the battery case [B].
- Fit the ECU in behind the left side rib [C] until the ECU bottoms.
  Front [D]

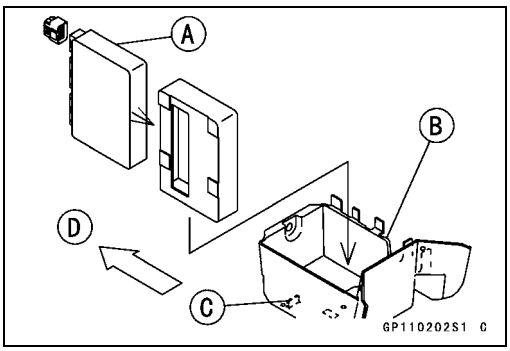

- Check that the vehicle-down sensor assy [A] is in place as shown.

★If the vehicle-down sensor assy is not correctly installed, reinstall it (see Vehicle-down Sensor section in this chapter).

- Tighten the screw [B] securely.
- Install the front seat (see Frame chapter).

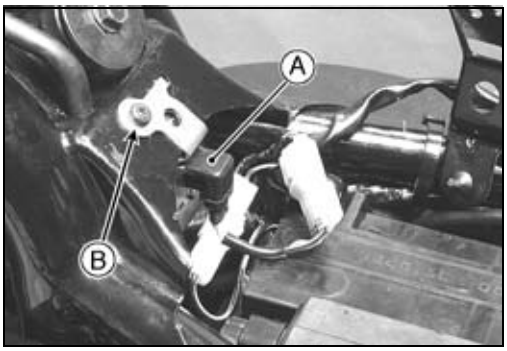

⚠ WARNING

Incorrect installation of the vehicle-down sensor could cause sudden loss of engine power. The rider could lose balance during certain riding situations, like leaning over in a turn, with the potential for an accident resulting in injury or death. Ensure that the down sensor is held in place by the sensor bracket as shown in the drawing.

Downloaded from www.vulcanriders-sweden.org

ECU

ECU Power Supply Inspection

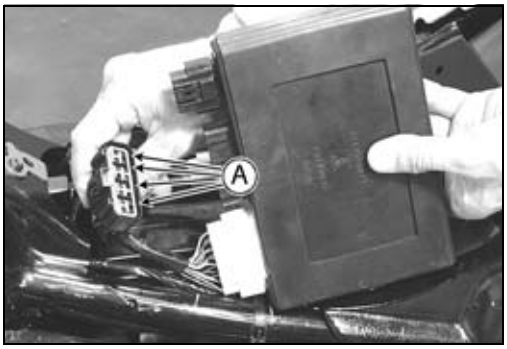

- Visually inspect the terminals [A] of the ECU connectors.

★If the connector is clogged with mud or dust, blow it off with compressed air.

★Replace the main harness if the terminals of the main harness connectors are cracked, bent, or otherwise damaged.

★Replace the ECU if the terminals of the ECU connectors are cracked, bent, or otherwise damaged.

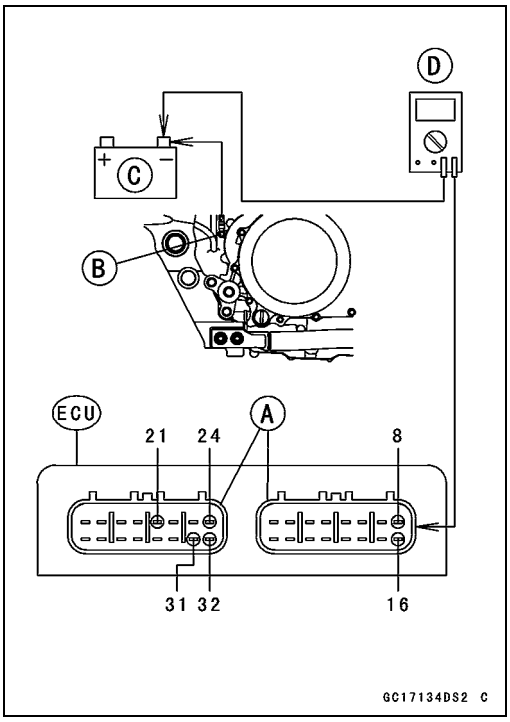

- With the ECU connectors [A] connected, check the following ground leads for continuity with the ignition switch ON or OFF, using a digital voltmeter [D].

ECU Grounding Inspection

Meter Connections

8, 16, 24, or 32 (BK/Y) Terminal	**←→Battery (–) Terminal**
21 (BR/BK) Terminal	**←→Battery (–) Terminal**
Engine Ground Terminal [B]	**←→Battery (–) Terminal**
Readings	**0 Ω (regardless of the ignition switch ON or OFF)**

★If no continuity, check the connector, the engine ground lead, or main harness, and repair or replace them if necessary.

Battery [C] in the Frame

Special Tool - Needle Adapter Set: 57001-1457

- Check the ECU power source voltage with a digital voltmeter.

ECU Power Source Inspection

Meter Connection: between 31 (W/R) Terminal and Battery (–) Terminal

Ignition Switch:

OFF	**0 V**
ON	**Battery Voltage (12.5 V or more)**

★If the voltmeter does not read as specified, check the following:

Power Source Wiring (see wiring diagram below)
DFI Fuse 15 A (see DFI Power Source section)
DFI Main Relay (see DFI Power Source section)
Ignition Fuse 10 A (see Electrical System chapter)

★If the inspection checks good, the ECU is damaged. Replace the ECU. The ECU itself cannot be checked or serviced.

Downloaded from www.vulcanriders-sweden.org

ECU

DFI Power Source Circuit

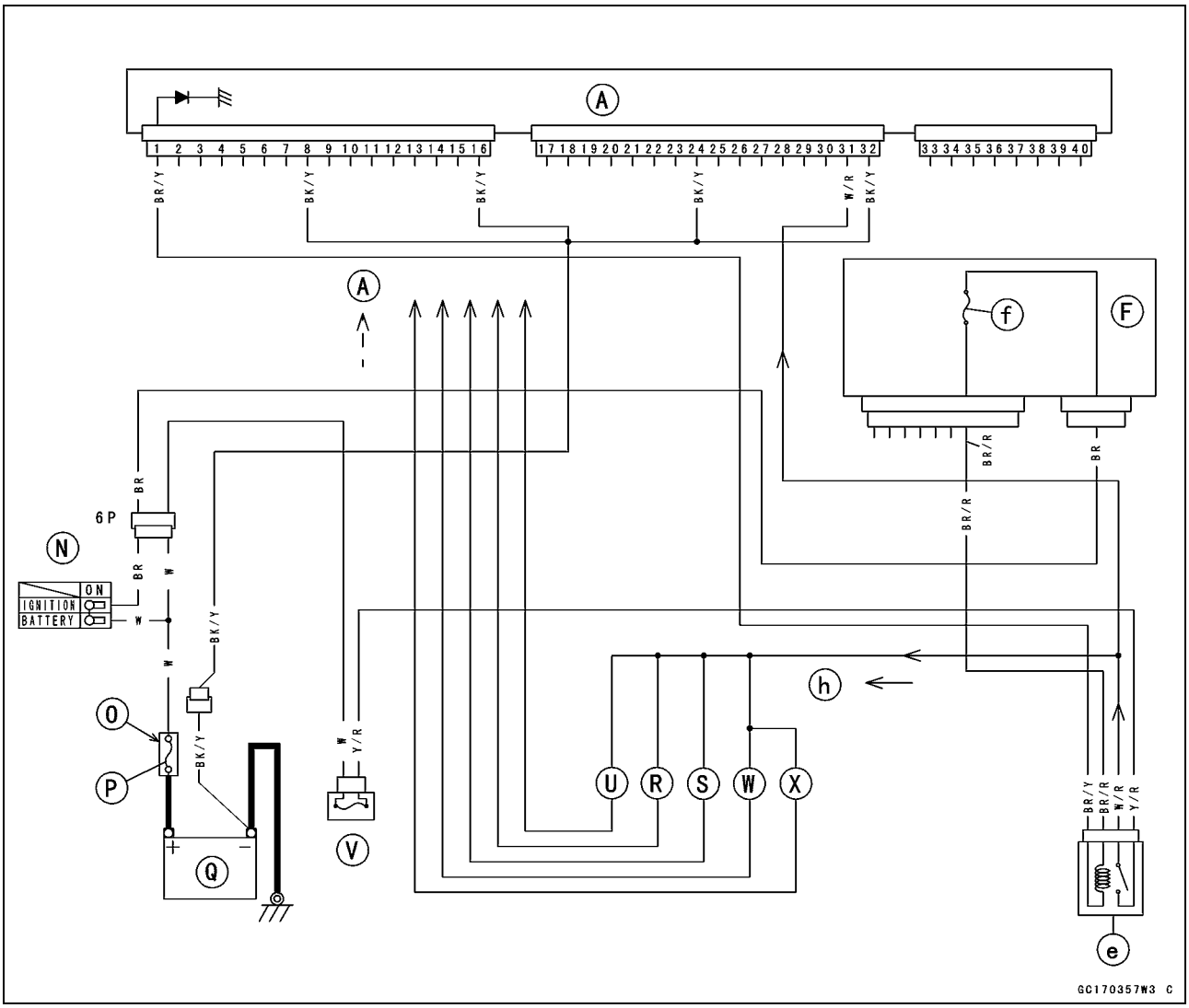

→: Current
ECU [A]
Junction Box [F]
Ignition Switch [N]
Starter Relay [O]
Main Fuse 30 A [P]
Battery [Q]
Fuel Injector #1 [R]
Fuel Injector #2 [S]
In-tank Fuel Pump [U]
DFI Fuse 15 A [V]
ISC Valve #2 [W]
ISC Valve #1 [X]
DFI Main Relay [e]
Ignition Fuse 10 A [f]
Actuators (R, S, U, W, X) [h]

Downloaded from www.vulcanriders-sweden.org

DFI Power Source

DFI Fuse Removal

- Remove the front seat (see Frame chapter).
- Pull the lock [A] and open the lid [B].
- Pull out the DFI fuse [C] from the case with needle nose pliers.
  Front [D]

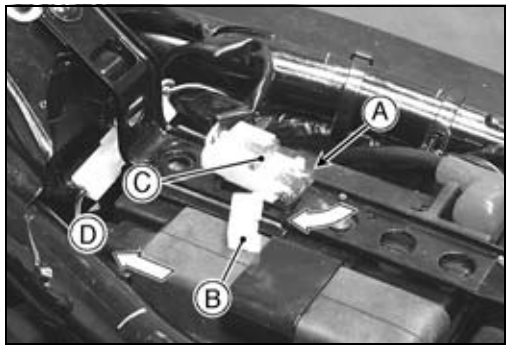

DFI Fuse Installation

- If a fuse fails during operation, inspect the DFI system to determine the cause, and then replace it with a new fuse of proper amperage.

DFI Fuse Inspection

- Remove the fuse (see DFI Fuse Removal).
- Inspect the fuse element.

★If it is open, replace the fuse. Before replacing a blown fuse, always check the amperage in the affected circuit. If the amperage is equal to or greater than the fuse rating, check the wiring and related components for a short circuit.
  Housing [A]
  Fuse Element [B]
  Terminals [C]
  Blown Element [D]

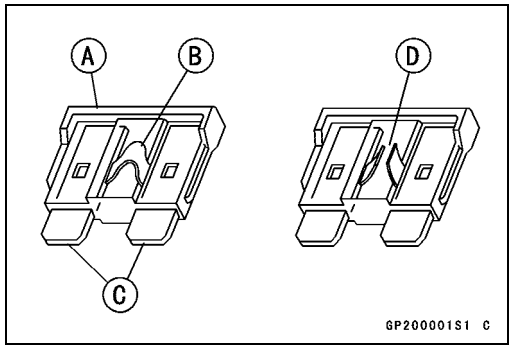

CAUTION

When replacing a fuse, be sure the new fuse matches the specified fuse rating for that circuit. Do not use a fuse rated for other than amperage and voltage specified in the Wiring Diagram.

DFI Main Relay Removal

CAUTION

Never drop the relay, especially on a hard surface. Such a shock to the relay can damage it.

- Remove:
  Right Side Cover (see Frame chapter)
  Coolant Reserve Tank (see Coolant Draining in the Coolant System chapter)
- Remove the DFI main relay [A] and disconnect the connector.
  Front [B]

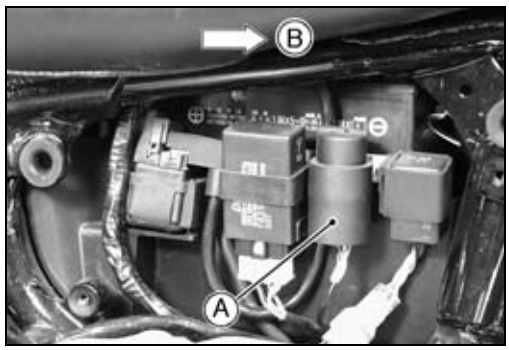

Downloaded from www.vulcanriders-sweden.org

DFI Power Source

DFI Main Relay Inspection

- Remove the DFI main relay (see above).
- Connect the hand tester [A] and one 12 V battery [B] to the relay connector [C] as shown.

Special Tool - Hand Tester: 57001-1394

Relay Coil Terminals [1] and [2]
Relay Switch Terminals [3] and [4]

Testing Relay

Tester range: 1 Ω range

Criteria: When battery is connected → 0 Ω
When battery is disconnected → ∞ Ω

★If the relay does not work as specified, replace the relay.

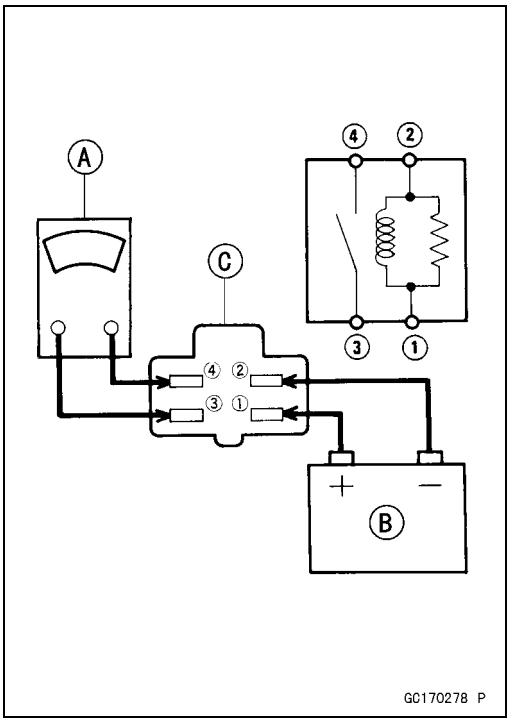

Downloaded from www.vulcanriders-sweden.org

FI Indicator LED Light

Inspection Flow Chart

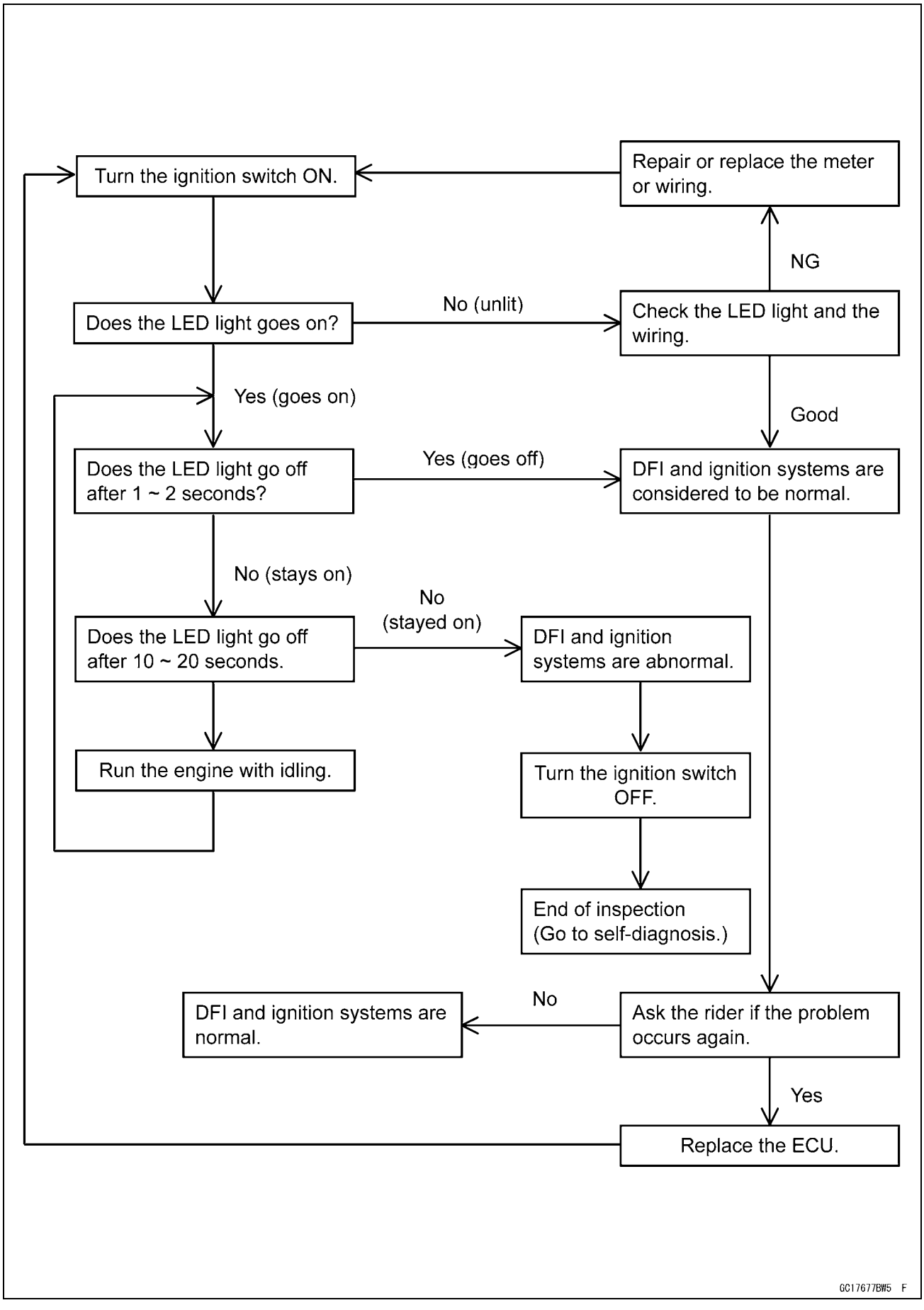

Downloaded from www.vulcanriders-sweden.org

FI Indicator LED Light

The FI indicator LED light [A] goes ON when the ignition switch is turned ON and the LED light goes OFF 1 ~ 2 seconds later. This is to ensure that the FI indicator LED light has not burned out and the DFI system and the ignition system function properly.



LED Light Inspection

- Refer to the Meter, Gauge section in the Electrical System chapter for LED Light Inspection.

⚠ WARNING

This inspection may produce sparks. Keep the battery and the meter unit away from the fuel tank.

★If the LED light is subnormal, replace the meter unit.

★If the FI indicator LED light is normal, the wiring or ECU has trouble. Check the wiring (see next diagram). If the wiring is good, replace the ECU.

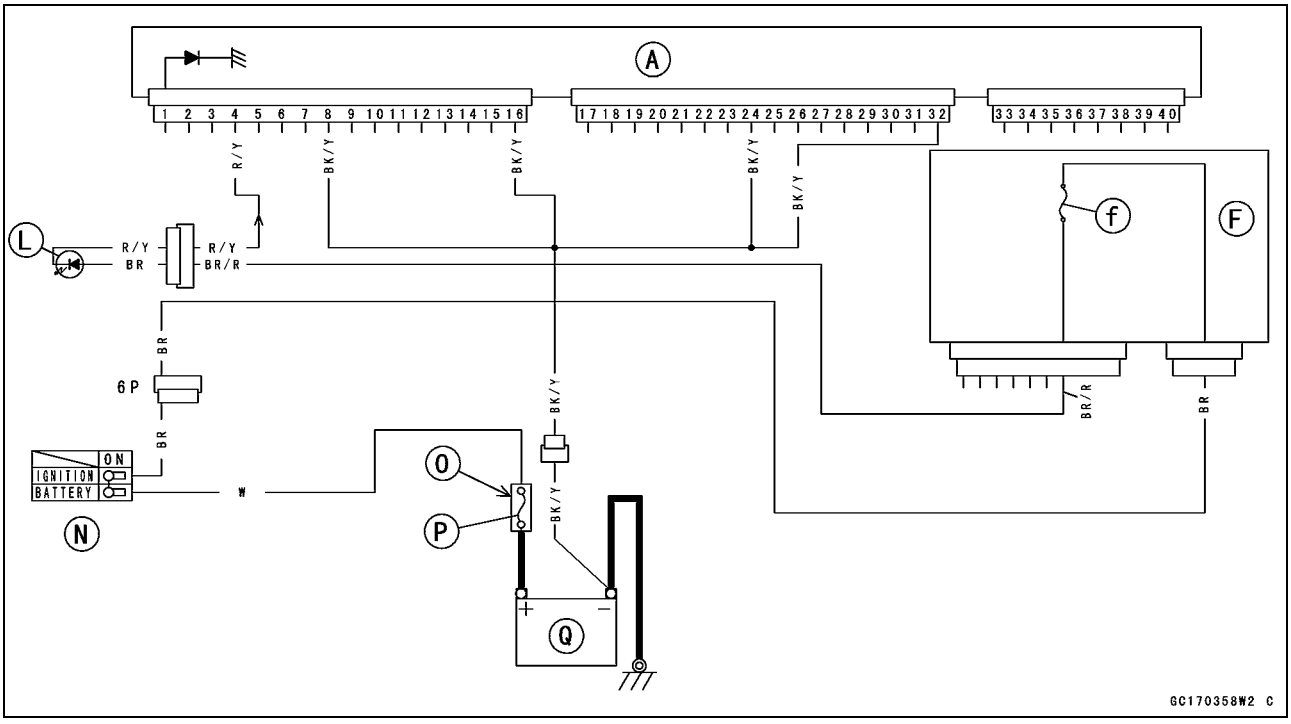

→: Signal
ECU [A]
Junction Box [F]
FI Indicator LED Light [L]
Ignition Switch [N]
Starter Relay [O]
Main Fuse 30 A [P]
Battery [Q]
Ignition Fuse 10 A [f]

Downloaded from www.vulcanriders-sweden.org

ISC Valves

There are two ISC valves; the ISC valve #1 for the front cylinder, and the ISC valve #2 for the rear cylinder. When the engine is cold, each ISC valve is opened according to the coolant temperature by the ECU, providing good startability in cold weather and allowing the engine to run fast for quick warm up (fast idle).

Each ISC valve has a solenoid valve. When the solenoid [A] is energized by the ECU, the solenoid valve [B] opens fully and inlet air [C] flows into [D] the ISC pipe.

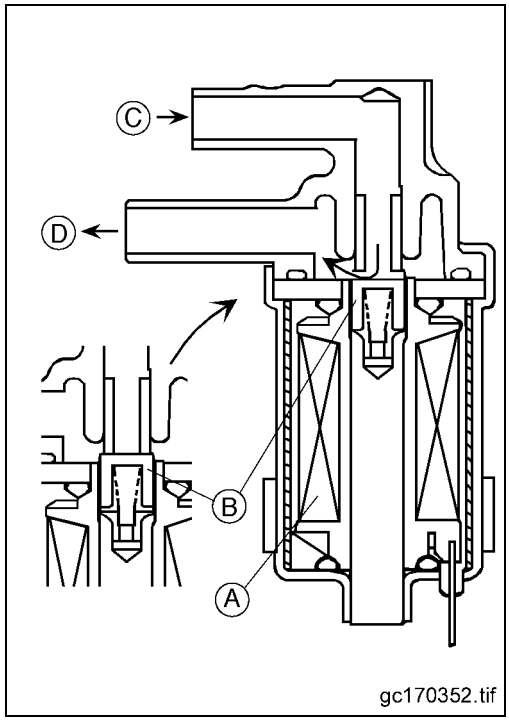

The air flows through the ISC pipes [A], and hoses [B] (bypass) of the throttle assy [C] into the cylinder head.

When starting the engine, the ISC valves always open fully, often causing too high fast idle. So the ECU controls ISC valves according to the coolant temperature. The ECU keeps the solenoid valves open and close repeatedly since the engine starts so that proper fast idle speed is obtained. When the engine has warmed up, the solenoid valves close and ISC valves finish operation.

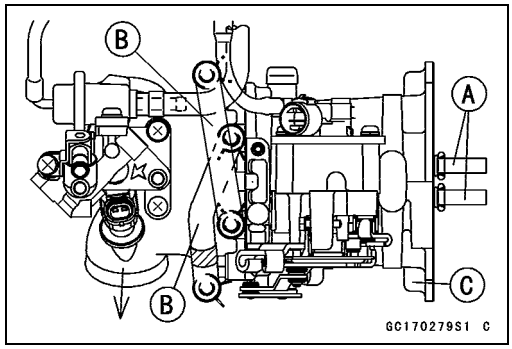

When the coolant temperature is low, the ratio (duty ratio) of valve opening time to total time (valve opening time and closing time) is set high, making the fast idle speed high. As the temperature goes up, the ratio is gradually decreased to lower the fast idle speed.

Coolant Temperature [A]
Low [B]
High [C]
100% [D] (Duty ratio at full open)
Duty ratio (0 ~ 100%) [E]

Generally, when a device is used for intermittent duty like starting, running, stopping, and idling, the device is operated under “duty control”. The ratio of running, or working time to total time is called “duty ratio” (“duty” means the work or operation done by a device).

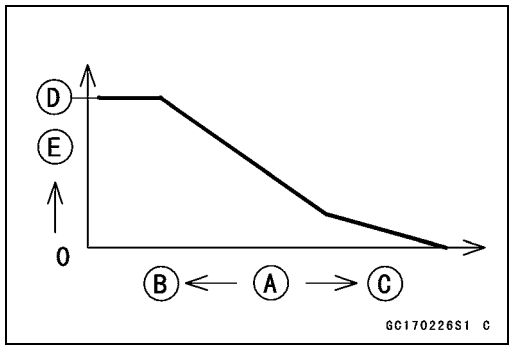

Downloaded from www.vulcanriders-sweden.org

ISC Valves

Removal/Installation

CAUTION

Never drop the ISC valves, especially on a hard surface. Such a shock to the valve can damage it.

○The ISC valves are removed during right air cleaner housing removal (see this chapter).
○The ISC valve itself is the same for front and rear, but wiring is different. Be careful not to reverse the leads.
ISC Valve #1 [A] → G/Y, W/R leads [B]
ISC Valve #2 [C] → G/BL, W/R leads [D]
Front [E]
● Install the ISC hoses as shown.
ISC Hose #1 with the red paint mark on the top
ISC Hose #2 with the blue paint mark [F] on the top

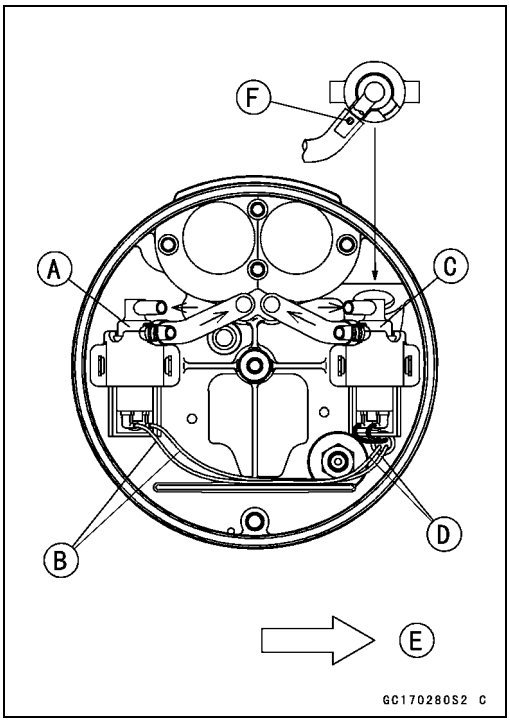

Power Source Voltage Inspection

NOTE

○*Be sure the battery is fully charged.*
○*The inspection is the same as "Power Source Voltage Inspection" of the fuel pump.*

● Turn the ignition switch OFF.
● Remove the ECU (see this chapter). Do not disconnect the ECU connectors.
● Connect a digital voltmeter [A] to the connector [B], using the needle adapter [C].

Special Tool - Needle Adapter Set: 57001-1457

○Insert the needle adapter inside the seal of the ECU connector.
● Measure the power source voltage with the engine stopped, and with the connectors joined.
● Turn the ignition switch ON.

ISC Valve Power Source Voltage
Connections to ECU
Tester (+) → W/R lead (terminal 31)
Tester (–) → Battery (–) terminal

Power Source Voltage at ECU Connector
Standard: Battery Voltage (12.5 V or more)

★If the reading of power source voltage is less than the standard, check the ECU for its ground, and power supply (see this chapter). If the ground and power supply are good, replace the ECU.
★If the reading is normal, check the power source voltage at the connectors of the ISC valves.
● Turn the ignition switch OFF.

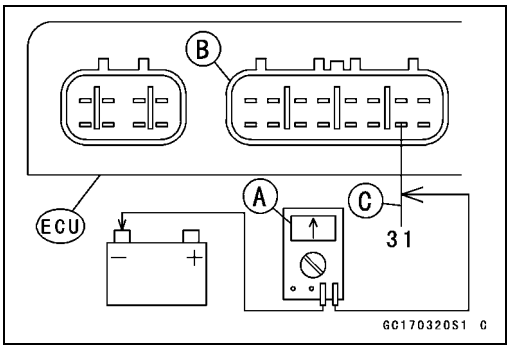

Downloaded from www.vulcanriders-sweden.org

ISC Valves

- Remove the right air cleaner cover (see this chapter).
- Connect a digital voltmeter [A] to the connectors [B] of each ISC valve.

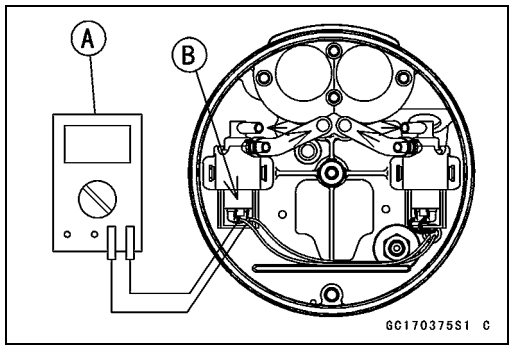

- Measure the power source voltage with the engine stopped, and with the connectors joined.
- Turn the ignition switch ON.

Power Source Voltage at ISC Valve Connector
Connections to ISC Valve #1, #2
Tester (+) → W/R lead
Tester (–) → Battery (–) Terminal

Power Source Voltage
Standard: Battery Voltage (12.5 V or more)

- Turn the ignition switch OFF.

★If the reading is lower than the standard, check the wiring.
★If the reading is normal, the power supply voltage is normal. Check the output voltage.

- After inspection, remove the needle adapters, and apply silicone sealant to the seals of the ECU connector for waterproofing.

Silicone Sealant- Kawasaki Bond: 56019-120

Output Voltage Inspection

- Measure the output voltage at the ECU connector, using the hand tester (special tool).

Special Tools - Hand Tester: 57001-1394
Needle Adapter Set: 57001-1457

- Measure the output voltage with the engine stopped, and with the connectors joined.
- Turn the ignition switch ON.

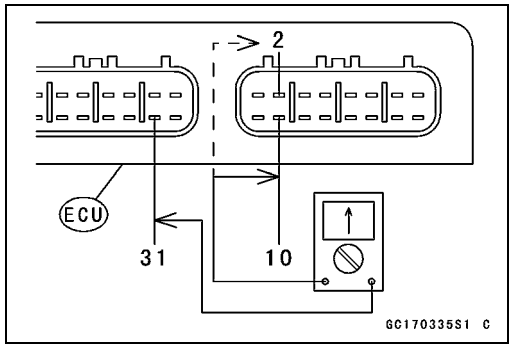

Output Voltage at ECU
Connections for ISC Valve #1
Tester (+) → W/R lead (terminal 31)
Tester (–) → G/Y lead (terminal 10)
Connections for ISC Valve #2
Tester (+) → W/R lead (terminal 31)
Tester (–) → G/BL lead (terminal 2)

Output Voltage at ECU
Criterion: The needle points battery voltage (12.5 V or more) and 11 seconds later 0 V.

★If the output voltage is incorrect, check the ECU for its ground, and power supply (see this chapter). If the ground and power supply are good, replace the ECU.

Downloaded from www.vulcanriders-sweden.org

ISC Valves

★If the output voltage is correct, check the output voltage at the connectors [A] of the ISC Valves.
- Remove the right air cleaner cover (see this chapter).
- Disconnect the ISC connectors.
- Connect the hand tester to the main harness connectors for each ISC valve.
- Measure the output voltage with the engine stopped, and with the connector disconnected.
- Turn the ignition switch ON.

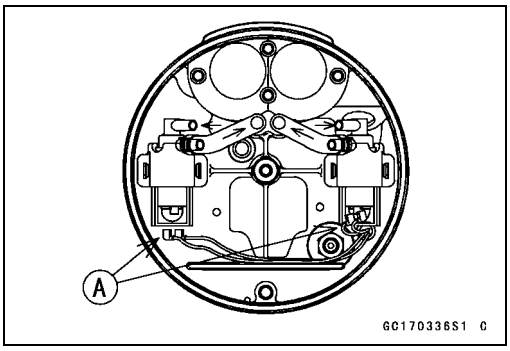

Output Voltage for ISC Valves
Connections for ISC Valve #1
Tester (+) → W/R lead
Tester (–) → G/Y lead
Connections for ISC Valve #2
Tester (+) → W/R lead
Tester (–) → G/BL lead

Output Voltage at ISC Valve
Reading: The needle points battery voltage (12.5 V or more) and 11 seconds later 0 V.

★If the reading is incorrect, check the wiring for continuity (see next diagram).
★If the reading is normal, check the resistance of the ISC valve for confirmation.

Resistance Inspection
- Disconnect the connectors from the ISC valve.
- Measure the resistance between the terminals of the ISC valve with a digital volt meter.

ISC Valve Solenoid Resistance (#1, #2)
Standard: 13.6 ~ 20.4 Ω

★If the reading is out of the standard range, replace the ISC valve.
★If the reading is good, replace the ECU.

Downloaded from www.vulcanriders-sweden.org

ISC Valves

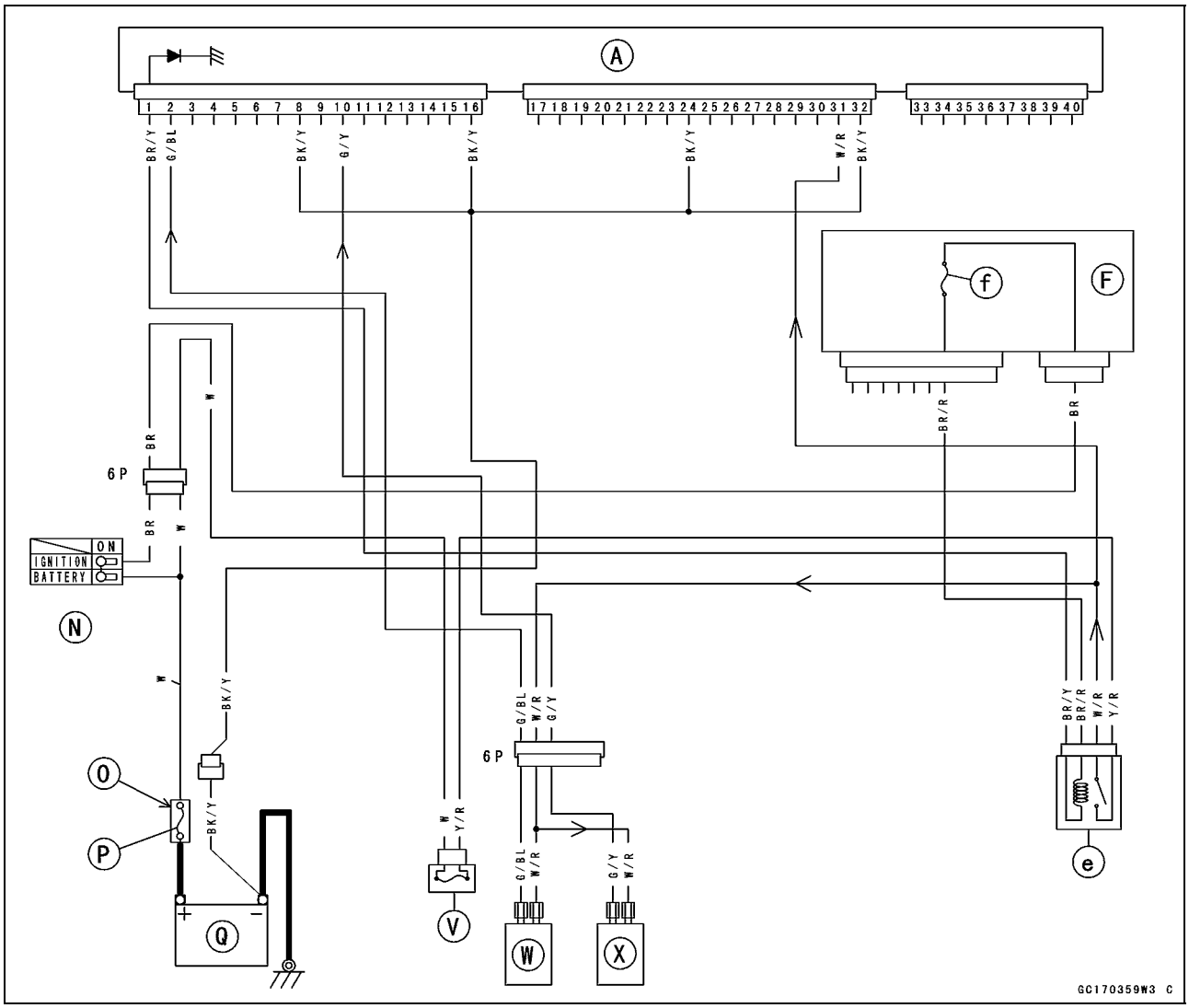

→ : Signal
ECU [A]
Junction Box [F]
Ignition Switch [N]
Starter Relay [O]
Main Fuse 30 A [P]
Battery [Q]
DFI Fuse 15 A [V]
ISC Valve #2 [W]
ISC Valve #1 [X]
DFI Main Relay [e]
Ignition Fuse 10 A [f]

Downloaded from www.vulcanriders-sweden.org

Fuel Line

Fuel Pressure Inspection

NOTE

○*Be sure the battery is fully charged.*

● Remove the fuel tank (see Fuel Tank Removal).

○Be sure to stuff a clean shop towel [A] around the high pressure fuel hose joint [B] of the fuel tank, and plug the joint with a plug [C] (ϕ7.8 ~ 8.0 mm × L 35 mm, see Fuel Tank Removal).

Front [D]

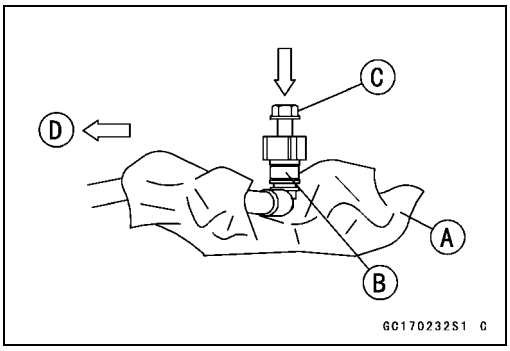

● Pinch the hose joint lock with fingers, disconnect the joint [A] and take out the fuel hose assy [B].

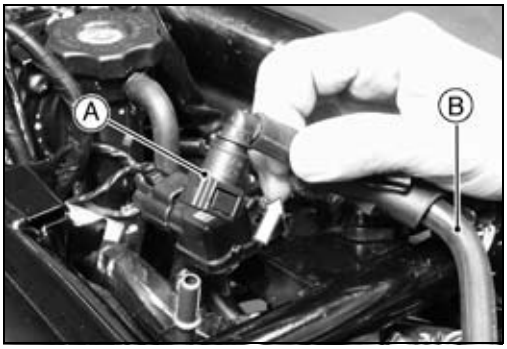

⚠ WARNING

Be prepared for fuel spillage; any spilled fuel must be completely wiped up immediately.
When the fuel hose is disconnected, fuel spills out from the hose and the pipe because of residual pressure. Cover the hose connection with a clean shop towel to prevent fuel spillage.

● Install the fuel pressure gauge adapter [A] (special tool) between the fuel tank outlet pipe [B] and the inlet pipe [C] to the delivery joint [D].

○Put the fuel pressure gauge adapter outside the left frame as shown.

● Connect the pressure gauge [E] (special tool) to the fuel pressure gauge adapter.

Fuel Tank [F]
Fuel Pump [G]
Front [H]
→: Fuel Flow

Special Tools - Fuel Pressure Gauge Adapter: 57001-1593
Fuel Hose: 57001-1607
Oil Pressure Gauge: 57001-125

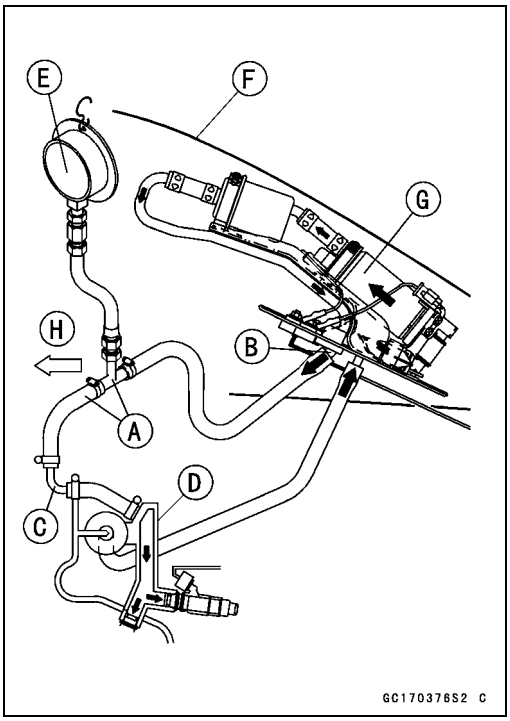

● Temporarily, install the fuel tank.

● Connect:

Fuel Pump Connector 4P (black)
Battery Lead (–) Terminal

⚠ WARNING

Do not try to start the engine with the fuel hoses disconnected.

● Turn the ignition switch ON. The fuel pump will turn for 3 seconds, and then stop.

Downloaded from www.vulcanriders-sweden.org

Fuel Line

● Measure the fuel pressure with the engine stopped.

Fuel Pressure
right after Ignition Switch ON, with pump running:
Standard: 310 kPa (3.2 kgf/cm², 46 psi)
after 3 seconds from Ignition Switch ON, with pump stopped:
Standard: 280 kPa (2.9 kgf/cm², 41 psi)

● Start the engine, and let it idle.
● Measure the fuel pressure with the engine idling.

Fuel Pressure (idling)
Standard: 260 kPa (2.7 kgf/cm², 38 psi)

● Measure the fuel pressure with the throttle fully opened a moment.

Fuel Pressure (with throttle fully opened)
Standard: 260 ~ 280 kPa (2.7 ~ 2.9 kgf/cm², 38 ~ 41 psi)

NOTE

○*The gauge needle will fluctuate. Read the pressure at the average of the maximum and minimum indications.*

★If the fuel pressure is much higher than the specified, check the following:
Fuel Return Hose for Sharp Bend, Kinking, or Clogging
Return Fuel Check Valve (see Fuel Tank section)
★If the fuel pressure is much lower than specified, check the following:
Fuel Line Leakage
Amount of Fuel Flow (see Fuel Flow Rate Inspection)
★If the fuel pressure is much lower than specified, and if inspection above checks out good, replace the pressure regulator, or the fuel pump assy and measure the fuel pressure again.
● Remove the fuel pressure gauge and adapter.
● Run the fuel hoses in accordance with the Cable, Wire, and Hose Routing section in the General Information chapter.

● When the high pressure fuel hose (fuel supply hose) assy is installed, note the following.
○Fit the high pressure fuel hose joint [A] onto the pipe until the joint clicks [B].
○Insert the high pressure fuel hose joint straight along the pipe.
Front [C]

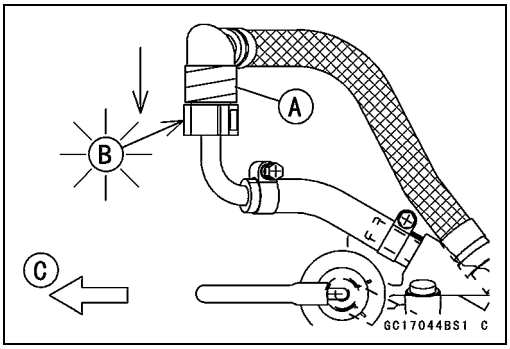

Downloaded from www.vulcanriders-sweden.org

Fuel Line

○Pull the high pressure fuel hose joint [A] up [B] and make sure it is locked and does not come off.
● Start the engine and check for fuel leakage.

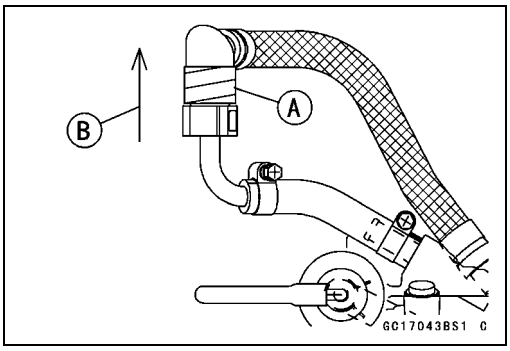

Pressure Regulator Removal

○The pressure regulator is removed during Injector Removal (see Injector Removal).

Fuel Flow Rate Inspection

NOTE

○*Be sure the battery is fully charged.*

⚠ WARNING

Gasoline is extremely flammable and can be explosive under certain conditions. Make sure the area is well-ventilated and free from any source of flame or sparks; this includes any appliance with a pilot light. Do not smoke. Turn the ignition switch OFF. Be prepared for fuel spillage; any spilled fuel must be completely wiped up immediately.

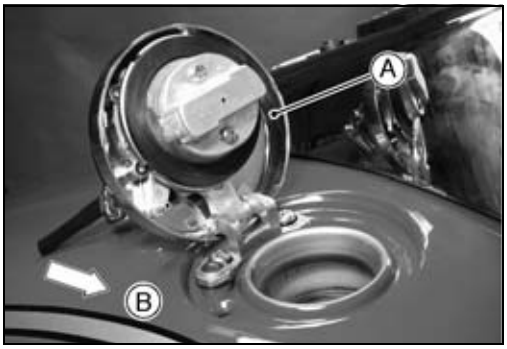

● Turn both ignition switch, and engine stop switch OFF.
● Wait until the engine cools down.
● Open the fuel tank cap [A] to lower the pressure in the tank.
Front [B]

Downloaded from www.vulcanriders-sweden.org

Fuel Line

- Prepare a plastic hose of the inside diameter 7.5 mm (0.295 in.) × L about 400 mm (15.7 in.) and a measuring cylinder.
- Remove:
  Front Seat (see Frame chapter)
  Fuel Tank Bolt and Nut

○Do not remove the meter unit.

- Raise the fuel tank.
- Stuff a clean shop towel around the fuel outlet hose joint.

○A person should pinch the hose joint locks with fingers, disconnect the joint (see Fuel Tank Removal) and another person should insert the plastic hose [A] quickly onto the tank outlet pipe.

- Secure the plastic hose with a clamp [B].
- Run the other side of the plastic hose into the measuring cylinder [C].
- Temporarily install the fuel tank and close the fuel tank cap.

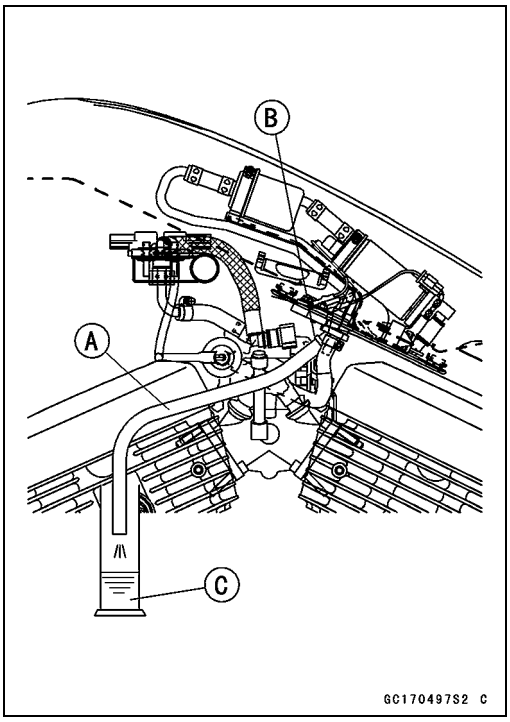

⚠ WARNING

Wipe off spilled out fuel immediately.
Be sure to hold the measuring cylinder vertical.

- With the engine stopped, turn the ignition switch ON. The fuel pump should operate for 3 seconds, and then should stop. Repeat this several times until the plastic hose is filled with fuel.
- Measure the discharge for 3 seconds with the plastic hose filled with fuel.

Amount of Fuel Flow
Standard: 75 mL (2.54 US oz) or more for 3 seconds

★If the fuel flow is much less than the specified, check the following:
Fuel Hoses for Sharp Bend, Kinking, or Clogging
Fuel Pump Assy (see Fuel Pump Inspection in this chapter)
Pump Screen (see Pump Screen Cleaning in the In-tank Fuel Pump section).

- After inspection, connect the fuel hoses, and install the fuel tank (see Fuel Tank Installation).
- Install the high pressure fuel hose (fuel supply hose) assy.
- Tighten:

Torque - High Pressure Fuel Hose Clamp Screw: 1.5 N·m (0.15 kgf·m, 13 in·lb)

Downloaded from www.vulcanriders-sweden.org

Self-Diagnosis

Self-diagnosis Function

The self-diagnosis indicates problems with the parts, wiring, and ECU in the DFI system and ignition system.

The ECU [C] always monitors each DFI circuit [A] for problems by measuring the voltage [B]. This circuit includes parts [D], and wiring [E].

When the circuit is open (problem), the following are possible problems.

Disconnection [F] in the Parts
Disconnection [G] in the Wiring
Disconnection [H] in the ECU

When the FI indicator indicates a problem, the ECU has the possibility of the problem as well as the parts and the wiring outside the ECU.

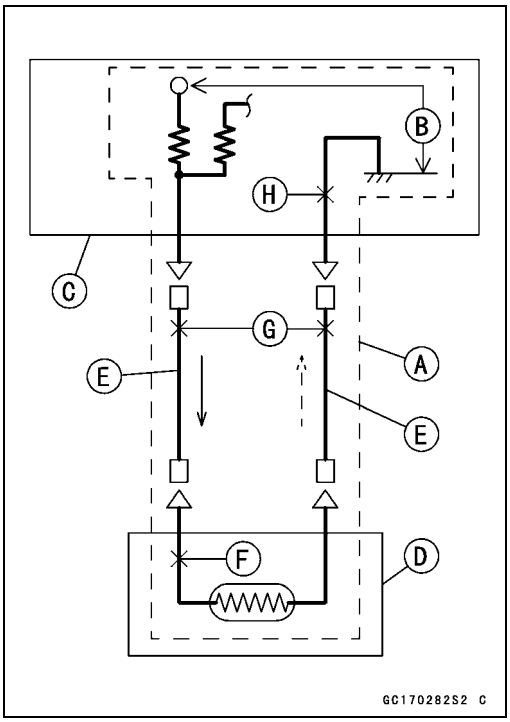

Self-diagnosis Procedures

○When a problem occurs with the DFI system, the DFI indicator LED light [A] goes on.



- Remove the front seat (see Frame chapter) and take the ECU [B] out.
- Take off the connector cap [C].
- With the ECU connector joined, enter the self-diagnosis mode by grounding the ECU's self-diagnosis check terminal 37 [D] to the battery (–) terminal [E], using a wire [F]. The LED light blinks in 3 seconds after grounding.
  Battery [G]

○Count the blinks of the LED light to read the fault code.

NOTE

○*Use a fully charged battery when conducting self-diagnosis. Otherwise, the LED light blinks very slowly or doesn't blink.*

○*Keep the check terminal grounded during self -diagnosis, using a wire.*

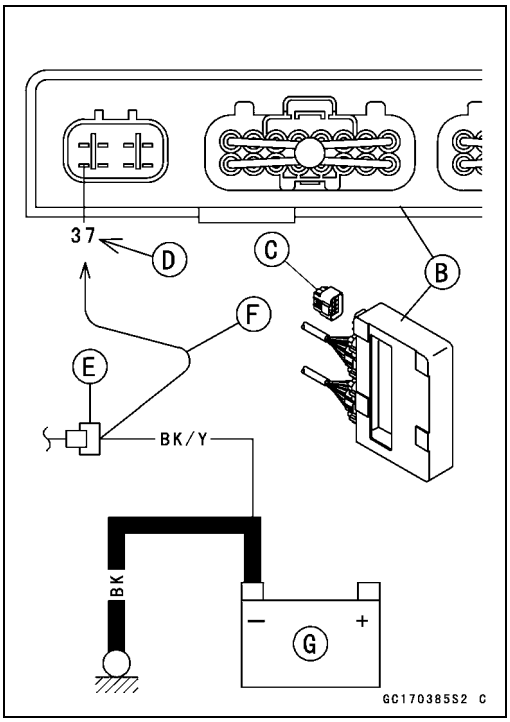

Downloaded from www.vulcanriders-sweden.org

Self-Diagnosis

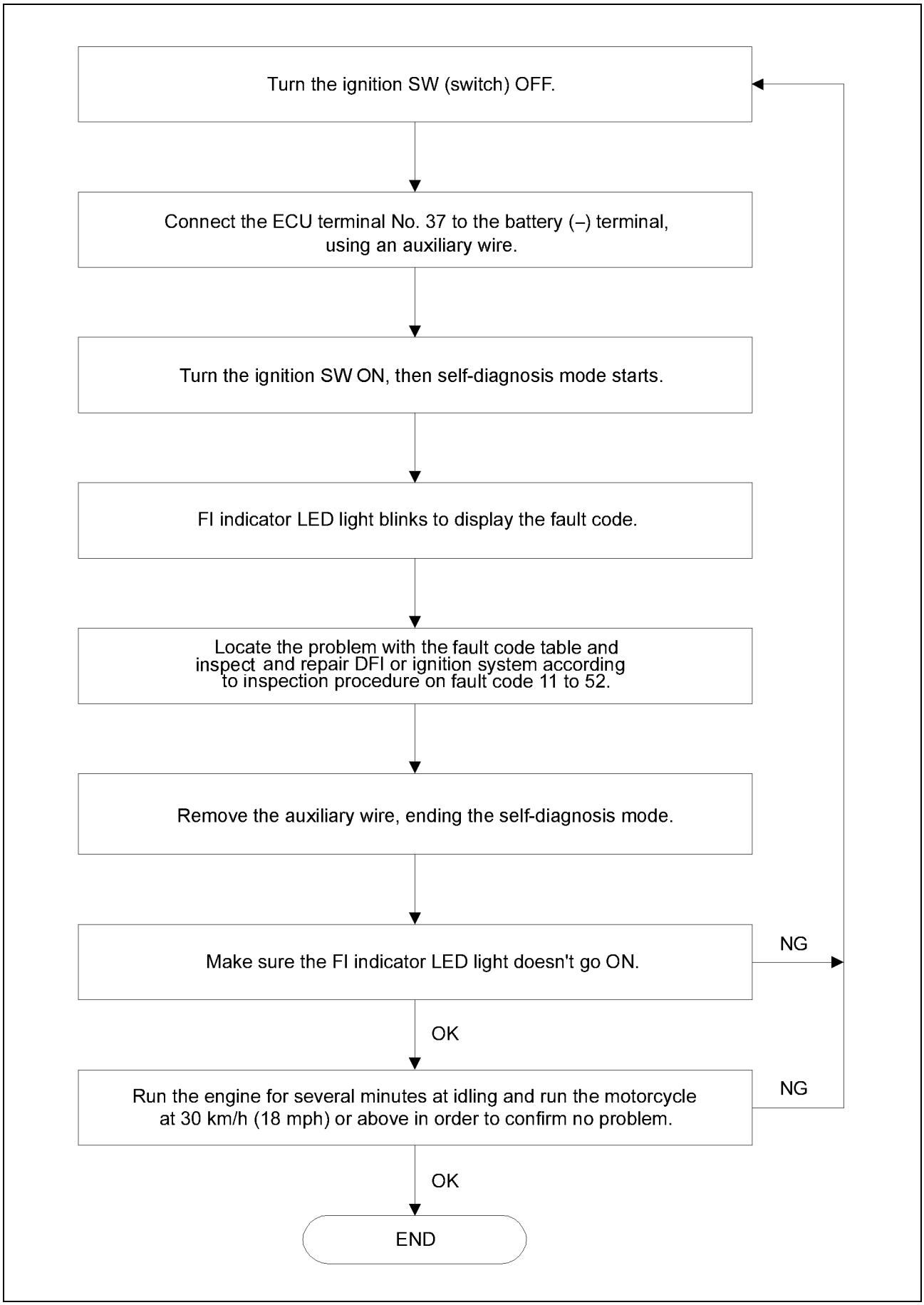

Downloaded from www.vulcanriders-sweden.org

Self-Diagnosis

How to Read Fault Codes

○Fault codes are shown by a series of long and short blinks of the FI indicator LED light as shown below.
○Read 10th digit and unit digit as the FI indicator LED light blinks.
○When there are a number of problems, all the fault codes can be stored and the display will begin starting from the lowest number fault code in the numerical order. Then after completing all codes, the display is repeated until the ignition switch is turned OFF.
○For example, if four problems occurred in the order of 31, 15, 41, 12, the fault codes are displayed from the lowest number in the order listed.
(12 → 15 → 31 → 41) → (12 → 15 → 31 → 41) → · · · (repeated)
○If there is no problem or when the repair has been done, no fault code is shown.
○If the problem is with the following parts, the ECU cannot memorize these problems, the FI indicator LED light doesn't go on, and no fault codes can be displayed.
FI Indicator LED Light
ISC Valves
Pressure Regulator (Fuel Pressure, Fuel Flow Rate)
DFI Main Relay
Ignition Coil Secondary Wiring (check the internal resistance, see Electrical System chapter)
ECU Power Source Wiring and Ground Wiring (see ECU Inspection in this chapter)
○For example, if two problems of 12 and 15 occur, the fault code 12 and 15 are shown as follows.

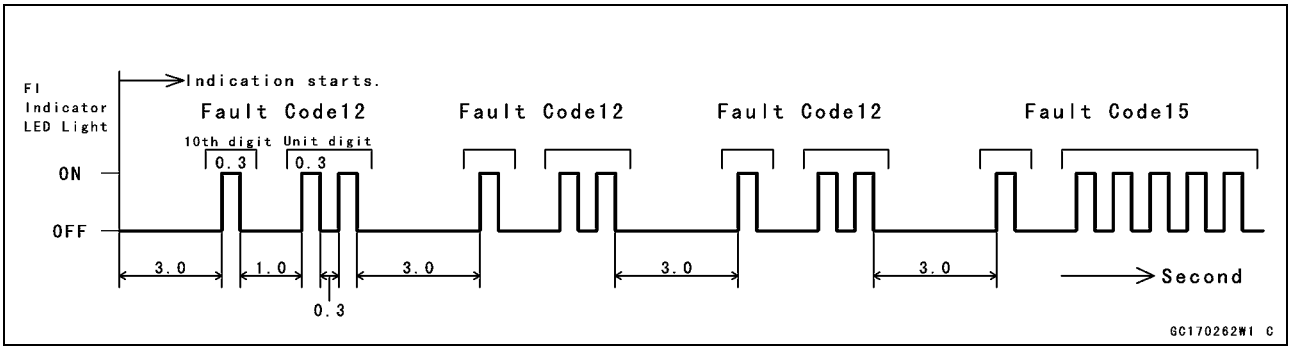

○Each fault code is continuously repeated three times.

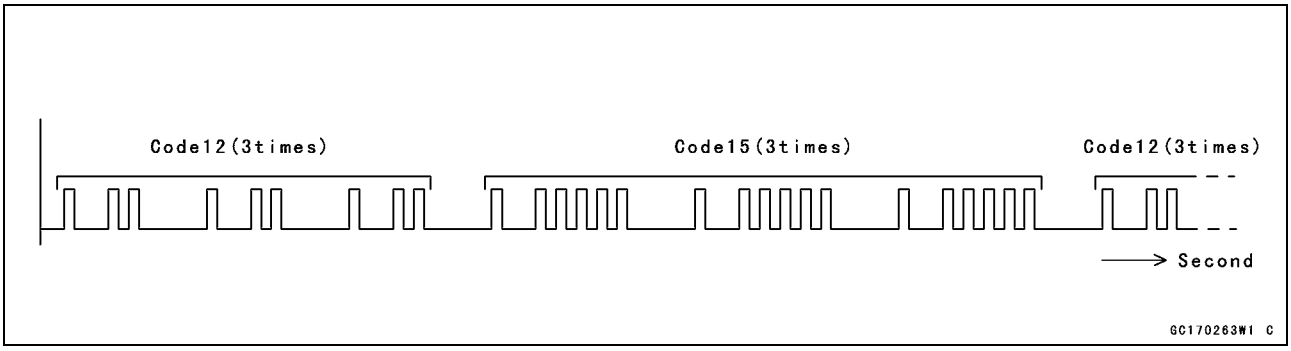

Downloaded from www.vulcanriders-sweden.org

Self-Diagnosis

How to Erase Fault Codes

○When the repair has been done, the LED light will not show fault codes any more.

★But even if the repair has been done, the ignition switch is turned OFF, or the battery is disconnected, all the fault codes remain in the ECU, which need not be absolutely eraced.

Fault Code Table

Fault Code	FI Indicator LED Light	Problems (1)
11	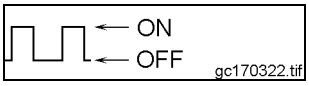	Throttle sensor malfunction, wiring open or short
12		Vacuum sensor malfunction, wiring open or short
13	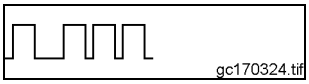	Inlet air temperature sensor malfunction, wiring open or short
14	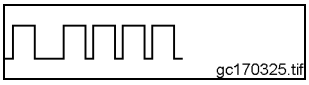	Water temperature sensor malfunction, wiring open or short
15	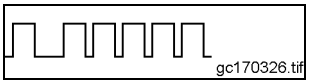	Atmospheric pressure sensor malfunction, wiring open or short
21		Pickup coil #1 malfunction, wiring open or short
22	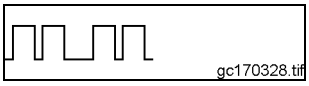	Pickup coil #2 malfunction, wiring open or short
31	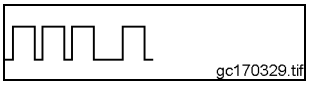	Vehicle-down sensor, malfunction, wiring open or short
41	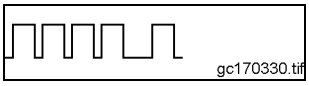	Injector #1 malfunction, wiring open or short
42	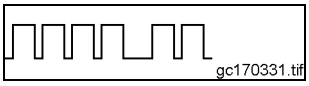	Injector #2 malfunction, wiring open or short
45	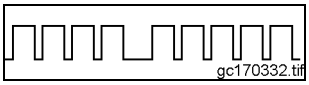	In-tank fuel pump malfunction, wiring open or short
51	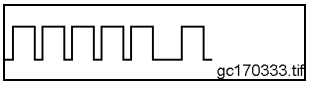	Ignition coil primary winding #1 malfunction, wiring open or short
52	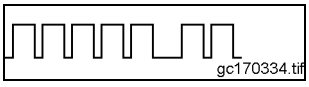	Ignition coil primary winding #2 malfunction, wiring open or short

Footnotes

(1) The ECU may be involved in these problems. If all the parts and circuits checked out good, be sure to check the ECU for ground and power supply. If the ground and power supply are checked good, replace the ECU.
#1: For Front Cylinder
#2: For Rear Cylinder

Downloaded from www.vulcanriders-sweden.org

Self-Diagnosis

Backups

○The ECU takes the following measures to prevent engine damage when the DFI or the ignition system parts have troubles.

Fault Codes	Parts	Output Signal Usable Range or Criteria	Backups by ECU
11	Throttle Sensor	Throttle Valve Opening Angle θ = –4° ~ +85°	⋆ If the throttle sensor system fails (the signal is out of the usable range, wiring short or open), the ECU locks ignition timing into the ignition timing at full throttle open position and sets the DFI in the D-J method (1).
12	Vacuum Sensor	Absolute Vacuum Pv = 63 mmHg ~ 860 mmHg	⋆ If the vacuum sensor system fails (the signal Pv is out of the usable range, wiring short or open), the ECU sets the DFI in the α-N method (1).
13	Inlet Air Tempera-ture Sensor	Inlet Air Temperature Ta = –47°C (–53°F) ~ +178°C (352°F)	⋆ If the inlet air temperature sensor fails (the signal is out of the usable range, wiring short or open), the ECU sets Ta at 45°C.
14	Water Tem-perature Sensor	Water Temperature Tw = –28C° (–18°C) ~ +161°C (32°F)	⋆ If the water temperature sensor system fails (the signal is out of the usable range, wiring short or open), the ECU sets Tw at 86°C.
15	Atmo-spheric Pressure Sensor	Absolute Atmospheric Pressure Pa = 63 mmHg ~ 860 mmHg	⋆ If the atmospheric pressure sensor system fails (the signal is out of the usable range, wiring short or open), the ECU sets Pa at 760 mmHg (the standard atmospheric pressure).
21	Pickup Coil #1	Either pickup coil must send signals (output voltage) 8 or more times continuously to the ECU.	⋆ If either pickup coil generates 8 or more signals, the ECU runs the engine by the signal of the good pickup coil, but neither pickup coils generate signals, the engine stops by itself.
22	Pickup Coil #2		
31	Vehicle -down Sensor	Vehicle-down Sensor Output Voltage (signal) Vd = 0.2 V ~ 4.6 V	⋆ If the vehicle-down sensor system has failures (the output voltage Vd is out of the usable range, wiring short or open), the ECU shuts off the fuel pump, the fuel injectors and the ignition system.
41	Fuel Injector #1	The injector must send signals (output voltage) 16 or more times continuously to the ECU.	⋆ If the injector #1 fails (signals less than 16 times, wiring short or open), the ECU shuts off the signal to the injector. Fuel is not supplied to the cylinder #1, though the engine keeps running.
42	Fuel Injector #2	The injector must send signals (output voltage) 16 or more times continuously to the ECU.	⋆ If the injector #2 fails (signals less than 16 times, wiring short or open), the ECU shuts off the signal to the injector. Fuel is not supplied to the cylinder #2, though the engine keeps running.
45	In-tank Fuel Pump	The pump must send signals (output voltage) continuously to the ECU.	⋆ If the fuel pump fails (no signals to ECU, wiring short or open), the ECU shuts off the pump, and then the engine stops because of fuel pressure drop.
51	Ignition Coil #1	The ignition coil primary winding must send signals (output voltage) continuously to the ECU.	⋆ If the ignition primary winding #1 has failures (no signal, wiring short or open), the ECU shuts off the injector #1 to stop fuel to the cylinder #1, though the engine keeps running.
52	Ignition Coil #2	The ignition coil primary winding must send signals (output voltage) continuously to the ECU.	⋆ If the ignition primary winding #2 has failures (no signal,wiring short or open), the ECU shuts off the injector #2 to stop fuel to the cylinder #2, though the engine keeps running.

Downloaded from www.vulcanriders-sweden.org

Self-Diagnosis

NOTE

○*(1) When the engine load is light like at idling or low speed, the ECU determines injection quantity by calculating from throttle vacuum (vacuum sensor output voltage) and engine speed (pickup coil output voltage). This method is called D-J method. As engine speed increases, and the engine load turns middle to heavy, the ECU determines injection quantity by calculating from throttle opening (throttle sensor output voltage) and engine speed. This method is called α-N method.*

Downloaded from www.vulcanriders-sweden.org

Throttle Sensor (Fault Code 11)

The throttle sensor is a rotating variable resistor that change output voltage according to throttle operating. The ECU senses this voltage change and determines fuel injection quantity, and ignition timing according to engine rpm, and throttle opening.

Input Terminal [A]
Output Terminal [B]
Ground Terminal [C]
Front [D]

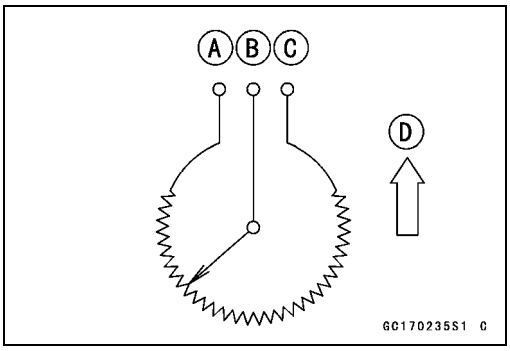

Throttle Sensor Removal/Adjustment

CAUTION

Do not remove or adjust the throttle sensor [A] since it has been adjusted and set with precision at the factory.
Never drop the sensor, especially on a hard surface. Such a shock to the sensor can damage it.

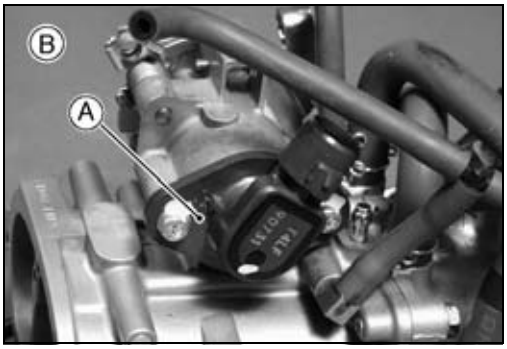

Front View [B]

Input Voltage Inspection

NOTE

○*Be sure the battery is fully charged.*
○*The inspection is the same as "Input Voltage Inspection" of the vacuum sensor or the atmospheric pressure sensor.*

- Turn the ignition switch OFF.
- Remove the ECU (see this chapter). Do not disconnect the ECU connectors.
- Connect a digital voltmeter [A] to the connector [B], using two needle adapters [C].

Special Tool - Needle Adapter Set: 57001-1457

- Measure the input voltage with the engine stopped, and with the connectors joined.
- Turn the ignition switch ON.

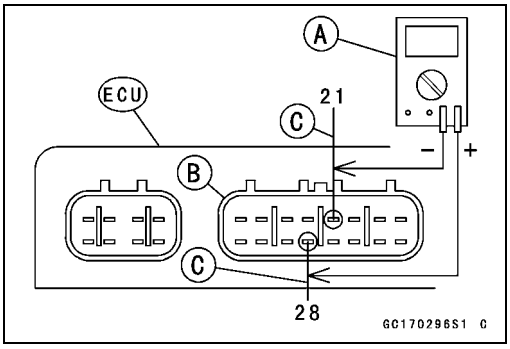

Throttle Sensor Input Voltage
Connections to ECU Connector
Meter (+) → BL/W lead (terminal 28)
Meter (–) → BR/BK lead (terminal 21)

Input Voltage at ECU Connector
Standard: 4.75 ~ 5.25 V DC

- Turn the ignition switch OFF.

★If the reading of input voltage is less than the standard, check the ECU for its ground, and power supply. If the ground and power supply are good, replace the ECU.

★If the input voltage is within the standard range, remove the fuel tank, and check the input voltage at the throttle sensor connector.

Downloaded from www.vulcanriders-sweden.org

Throttle Sensor (Fault Code 11)

● Connect a digital meter [A] to the throttle sensor connector [B], using two needle adapters [C].
Front [D]

Special Tool - Needle Adapter Set: 57001-1457

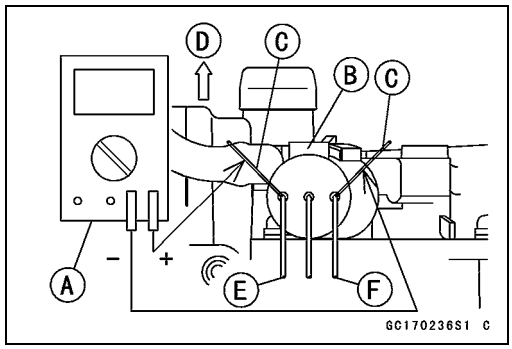

CAUTION

Insert the needle adapter straight along the lead in the connector to prevent short circuit between terminals.

● Measure the sensor input voltage with the engine stopped, and with the connector joined.
● Turn the ignition switch ON.

Throttle Sensor Input Voltage
Connections to Sensor
Meter (+) → BL/W lead [E]
Meter (–) → BR/BK lead [F]

Input Voltage at Sensor
Standard: 4.75 ~ 5.25 V DC

● Turn the ignition switch OFF.
★If the reading is out of the range, check the wiring (see the wiring diagram in this section).
★If the reading is good, check the output voltage of the sensor.

Output Voltage Inspection
● Measure the output voltage at the ECU in the same way as input voltage inspection. Note the following.
Digital Voltmeter [A]
Connector [B]
Needle Adapters [C]
● Start the engine and warm it up thoroughly.
● Check idle speed to make sure the throttle opening is correct.

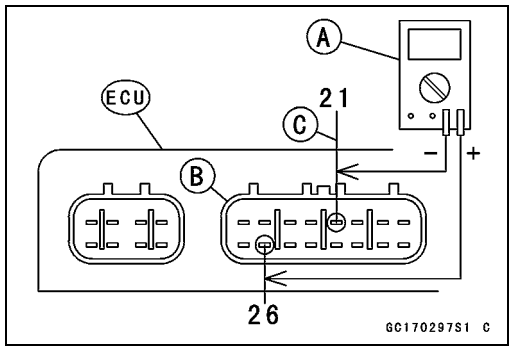

Idle Speed
Standard: 950 ±50 r/min (rpm)

★If the idle speed is out of the specified range, adjust the idle speed (see this chapter).
● Turn off the ignition switch.
● Measure the output voltage with the engine stopped, and with the connector joined.
● Turn the ignition switch ON.

Downloaded from www.vulcanriders-sweden.org

Throttle Sensor (Fault Code 11)

Throttle Sensor Output Voltage
Connections to ECU
Meter (+) → Y/W lead (terminal 26)
Meter (–) → BR/BK lead (terminal 21)

Output Voltage at ECU
Standard: 0.584 ~ 0.604 V DC (at idle throttle opening)
4.29 ~ 4.59 V DC (at full throttle opening)

★If the output voltage is within the standard range, check the ECU for its ground, and power supply (see this chapter). If the ground and power supply are good, replace the ECU.
★If the output voltage is far out of the standard range (e.g. when the wiring is open, the reading is 0 V), remove the fuel tank, and check the output voltage again at the sensor connector.

● Connect a digital meter [A] to the throttle sensor connector [B], using the needle adapters [C].
Special Tool - Needle Adapter Set: 57001-1457
Front [D]

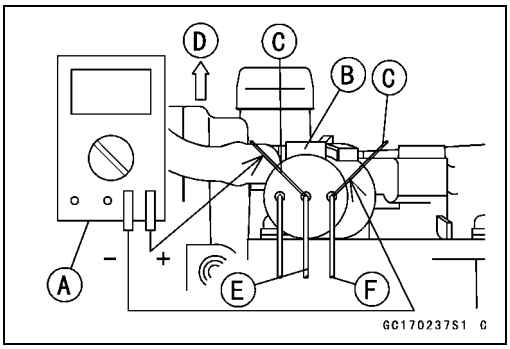

CAUTION

Insert the needle adapter straight along the lead in the connector to prevent short circuit between terminals.

● Measure the sensor output voltage with the engine stopped, and with the connector joined.
● Turn the ignition switch ON.

Throttle Sensor Output Voltage
Connections to Sensor
Meter (+) → Y/W lead [E]
Meter (–) → BR/BK lead [F]

Output Voltage at Sensor
Standard: 0.584 ~ 0.604 V DC (at idle throttle opening)
4.29 ~ 4.59 V DC (at full throttle opening)

★If the output voltage is normal, check the wiring for continuity (see next diagram).
★If the reading is out of the standard range, inspect the throttle sensor resistance.

● After throttle sensor inspection, remove the needle adapters, and apply silicone sealant to the seals [A] of the connector [B] for waterproofing.
Silicone Sealant- Kawasaki Bond: 56019-120

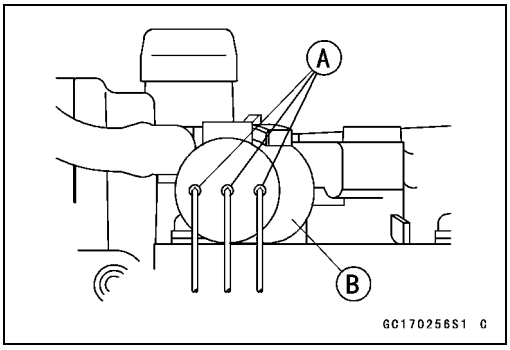

Downloaded from www.vulcanriders-sweden.org

Throttle Sensor (Fault Code 11)

Resistance Inspection

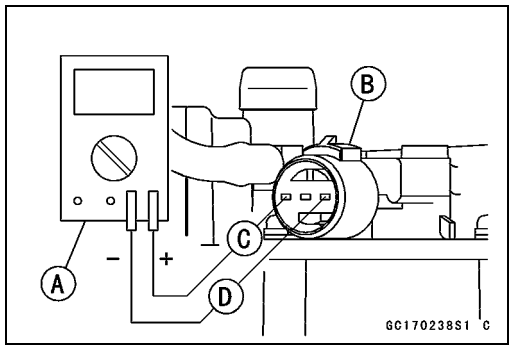

- Turn the ignition switch OFF.
- Disconnect the throttle sensor connector.
- Connect a digital meter [A] to the throttle sensor connector [B].
- Measure the throttle sensor resistance.

Throttle Sensor Resistance
Connections: BL/W lead [C] ←→ BR/BK lead [D]
Standard: 4 ~ 6 kΩ

★If the reading is out of the range, replace the throttle body.
★If the reading is within the range, but the problem still exists, replace the ECU (see this chapter).

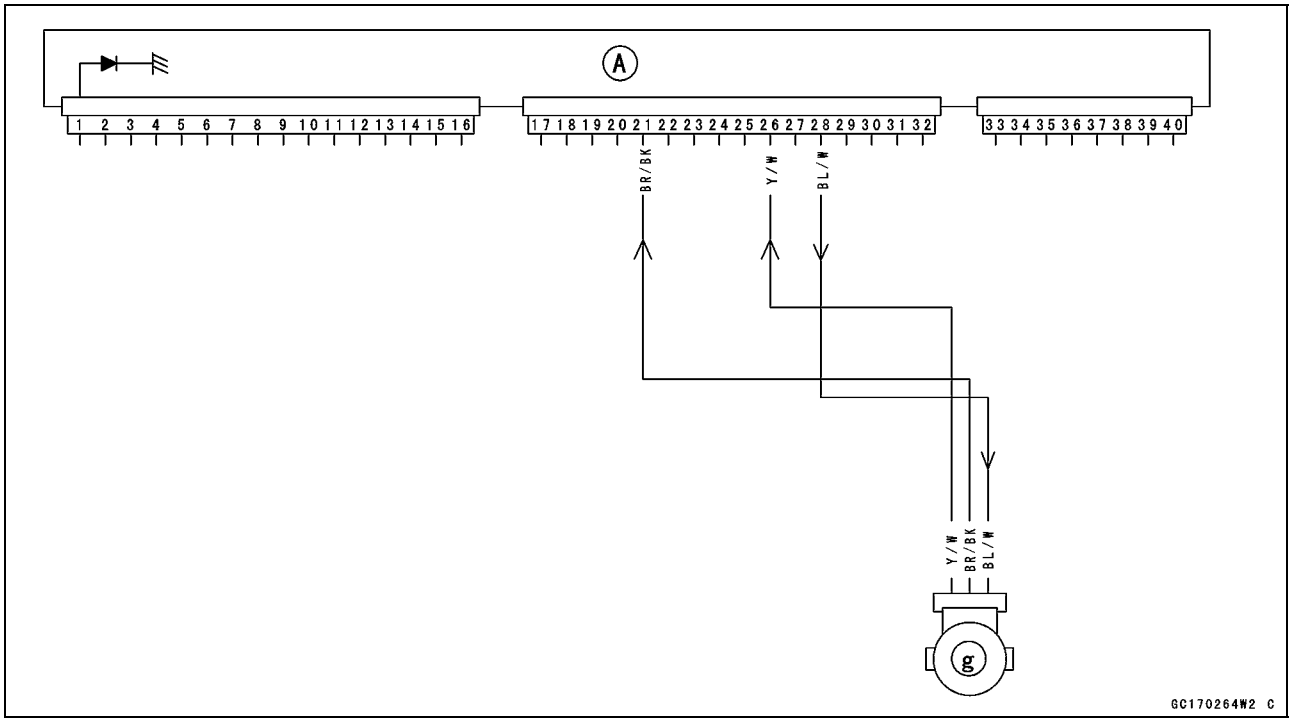

→: Signal
ECU [A]
Throttle Sensor [g]

Downloaded from www.vulcanriders-sweden.org

Vacuum Sensor (Fault Code 12)

Removal

CAUTION

Never drop the sensor, especially on a hard surface. Such a shock to the part can damage it.

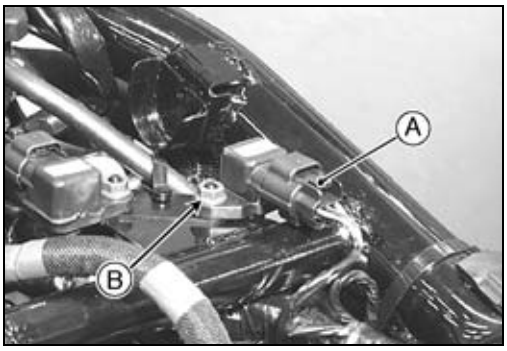

- Remove the fuel tank (see Fuel Tank section in this chapter).
- Disconnect the vacuum sensor connector [A] (left view).
- Unscrew the vacuum sensor nut [B] and remove the sensor.
- Disconnect the vacuum hose from the sensor.

Installation

NOTE

○*The vacuum sensor is the same part as the atmospheric pressure sensor except that the vacuum sensor has a vacuum hose and different wiring.*

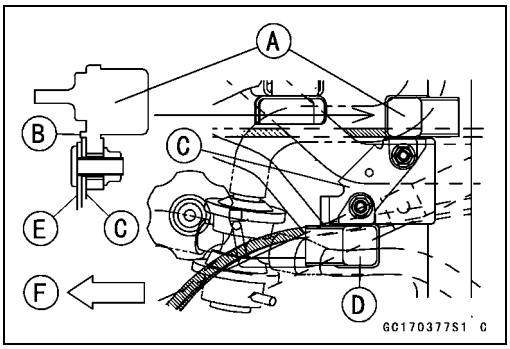

- Route the vacuum hose correctly (see Cable, Wire, and Hose Routing section in the General Information chapter). Make sure it doesn't get pinched or kinked.
- Install the vacuum sensor [A].

○The stopper [B] must not be on the sensor holder [C].
Atmospheric Pressure Sensor [D] (for reference)
Frame Bracket [E]
Front [F]

- Tighten:

Torque - Vacuum Sensor Nut: 9.8 N·m (1.0 kgf·m, 87 in·lb)

- Install the fuel tank (see this chapter).

Input Voltage Inspection

NOTE

○*Be sure the battery is fully charged.*

○*The inspection is the same as "Input Voltage Inspection" of the throttle sensor or the atmospheric pressure sensor.*

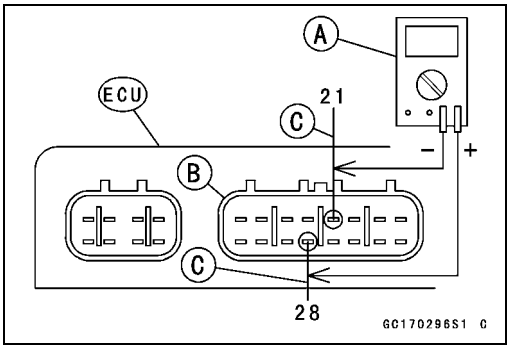

- Turn the ignition switch OFF.
- Remove the ECU (see this chapter). Do not disconnect the ECU connectors.
- Connect a digital voltmeter [A] to the connector [B], using two needle adapters [C].

Special Tool - Needle Adapter Set: 57001-1457

○Measure the input voltage with the engine stopped, and with the connectors joined.

- Turn the ignition switch ON.

Vacuum Sensor Input Voltage
Connections to ECU
Meter (+) → BL/W lead (terminal 28)
Meter (–) → BR/BK lead (terminal 21)

Input Voltage at ECU
Standard: 4.75 ~ 5.25 V DC

★If the reading is less than the standard range, check the ECU for its ground, and power supply (see this chapter). If the ground and power supply are good, replace the ECU.

Downloaded from www.vulcanriders-sweden.org

Vacuum Sensor (Fault Code 12)

★If the reading is within the standard range, remove the fuel tank, and check the input voltage again at the sensor connector [A] (rear view).
Needle Adapters [B]

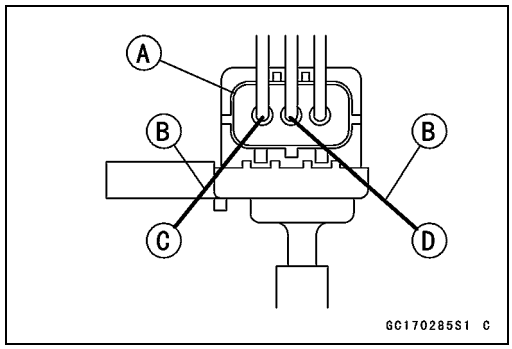

- Measure the input voltage with the engine stopped, and with the connector joined.
- Turn the ignition switch ON.

Vacuum Sensor Input Voltage
Connections to Sensor (front view)
Meter (+) → BL/W lead [C]
Meter (–) → BR/BK lead [D]

Input Voltage at Sensor Connector
Standard: 4.75 ~ 5.25 V DC

★If the reading is out of the standard range, check the wiring (see wiring diagram in this section).
★If the reading is good, the input voltage is normal. Check the output voltage.
- Turn the ignition switch OFF, remove the needle adapters and apply silicone sealant to the seals of the sensor connector for waterproofing.

Silicone Sealant- Kawasaki Bond: 56019-120

Output Voltage Inspection
- Measure the output voltage at the ECU in the same way as input voltage inspection. Note the following.

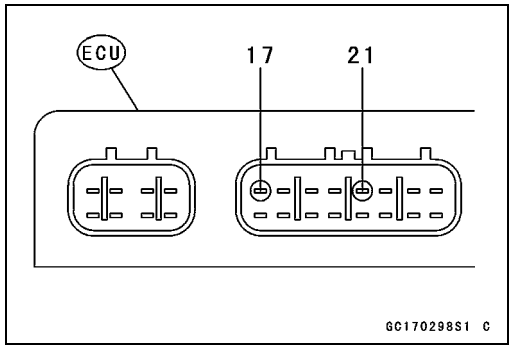

Vacuum Sensor Output Voltage
Connections to ECU
Meter (+) → W/BL lead (terminal 17)
Meter (–) → BR/BK lead (terminal 21)

Output Voltage at ECU
Usable Range: 3.74 ~ 4.26 V DC at the standard atmospheric pressure (101.32 kPa, or 76 cmHg abs.)

NOTE

○*The output voltage changes according to the local atmospheric pressure.*
○*The vacuum sensor output voltage is based on a nearly perfect vacuum in the small chamber of the sensor. So, the sensor indicates absolute vacuum.*

★If the output voltage is within the usable range, check the ECU for its ground, and power supply (see this chapter). If the ground and power supply are good, replace the ECU.

Downloaded from www.vulcanriders-sweden.org

Vacuum Sensor (Fault Code 12)

★If the output voltage is far out of the usable range, remove the fuel tank, and check the output voltage again at the sensor connector [A] (when the wire is open, the output voltage is about 1.8 V).
Needle Adapters [B]

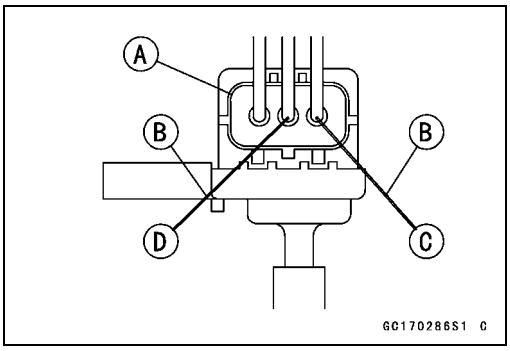

Vacuum Sensor Output Voltage
Connections to Sensor (front view)
Meter (+) → W/BL lead [C]
Meter (–) → BR/BK lead [D]

Output Voltage at Sensor Connector
Usable Range: 3.74 ~ 4.26 V DC at the standard atmospheric pressure (101.32 kPa, or 76 cmHg absolute)

★If the output voltage is normal, check the wiring for continuity (see next diagram).
★If the output voltage is out of the usable range, replace the sensor.

- Turn the ignition switch OFF and remove the needle adapters.
- Apply silicone sealant to the seals of the sensor connector for waterproofing.

Silicone Sealant- Kawasaki Bond: 56019-120

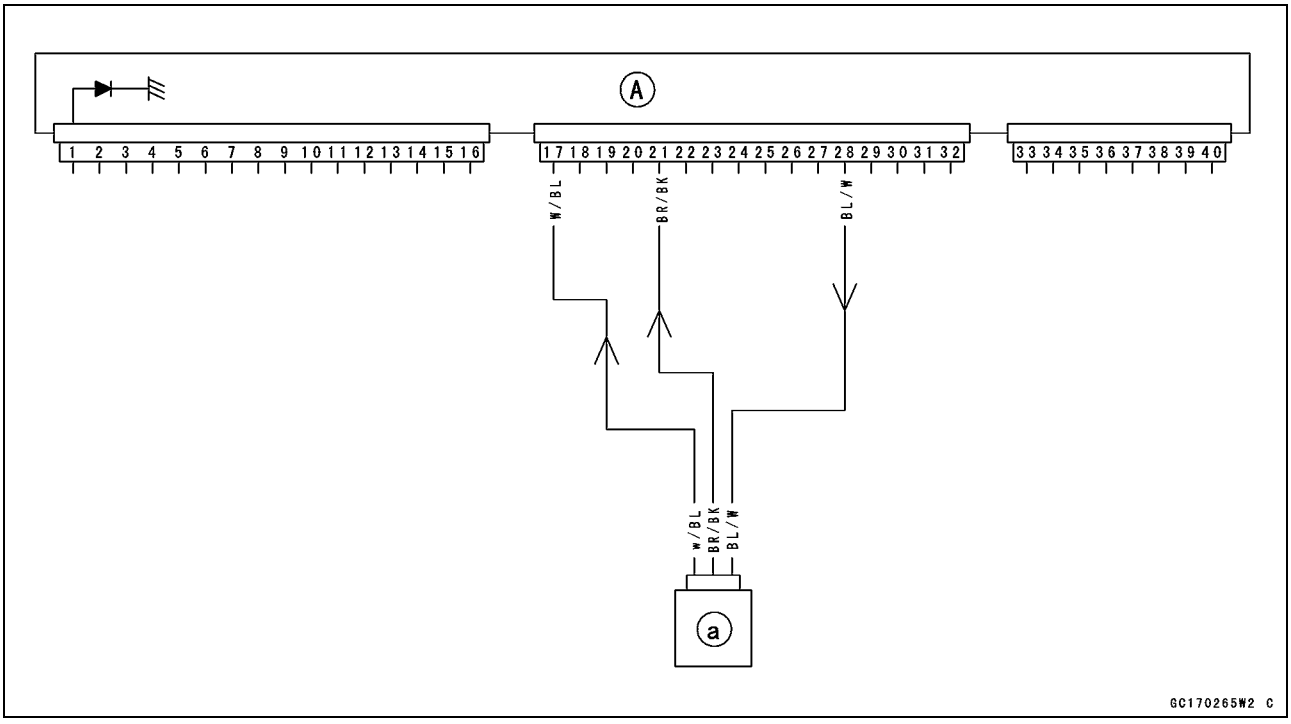

→: Signal
ECU [A]
Vacuum Sensor [a]

Downloaded from www.vulcanriders-sweden.org

Vacuum Sensor (Fault Code 12)

★If you need to check the vacuum sensor for vacuum other than 76 cmHg (abs), check the output voltage as follows:
○Remove the fuel tank (see this chapter).
● Remove the vacuum sensor [D] and disconnect the vacuum hose from the sensor.
● Connect an auxiliary hose [E] to the vacuum sensor.
● Temporarily install the vacuum sensor.
○Connect a commercially available digital meter [A], the needle adapters [F], vacuum gauge [B], and the fork oil level gauge [C] to the vacuum sensor.

Special Tools - Fork Oil Level Gauge: 57001-1290
Needle Adapter Set: 57001-1457

Digital Volt Meter Connections
Meter (+) → W/BL lead of Vacuum Sensor
Meter (–) → BR/BK lead of Vacuum Sensor

○Turn the ignition switch ON.
○Measure the vacuum sensor output voltage from various vacuum readings, while pulling the handle of the fork oil level gauge.
○Check the vacuum sensor output voltage, using the following formula and charts for Pv = 24 ~ 55 cmHg and 55 ~ 86 cmHg.

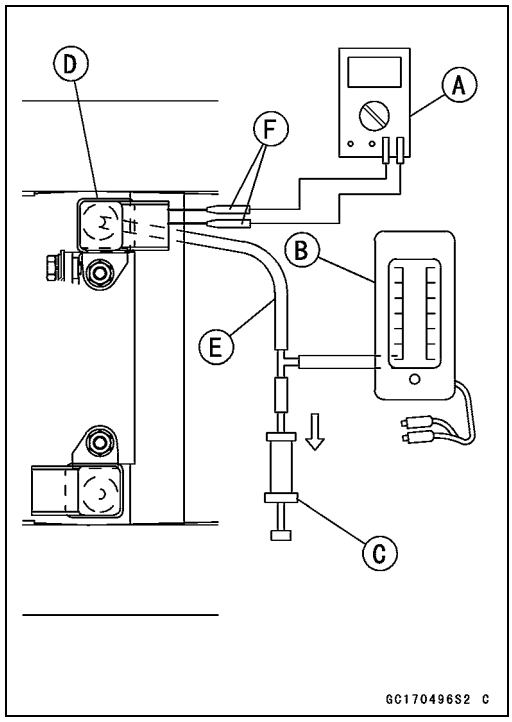

Downloaded from www.vulcanriders-sweden.org

Vacuum Sensor (Fault Code 12)

Suppose:
Pg: Vacuum (gauge) of Throttle Assy
Pl: Local Atmospheric Pressure (absolute) measured by a barometer
Pv: Vacuum (absolute) of Throttle Assy
Vv: Sensor Output Voltage (v)

then
Pv = Pl – Pg

For example, suppose the following data is obtained:
Pg = 8 cmHg (vacuum gauge reading)
Pl = 70 cmHg (barometer reading)
Vv = 3.2 V (digital volt meter reading)

then
Pv = 70 – 8 = 62 cmHg (abs)

Plot this Pv (62 cmHg) at a point [1] on the chart and draw a vertical line through the point. Then, you can get the usable range [2] of the sensor output voltage.
Usable range = 3.04 ~ 3.49 V
Plot Vv (3.2 V) on the vertical line. → Point [3].
Results: In the chart, Vv is within the usable range and the sensor is normal.

Pv = 24 ~ 55 cmHg

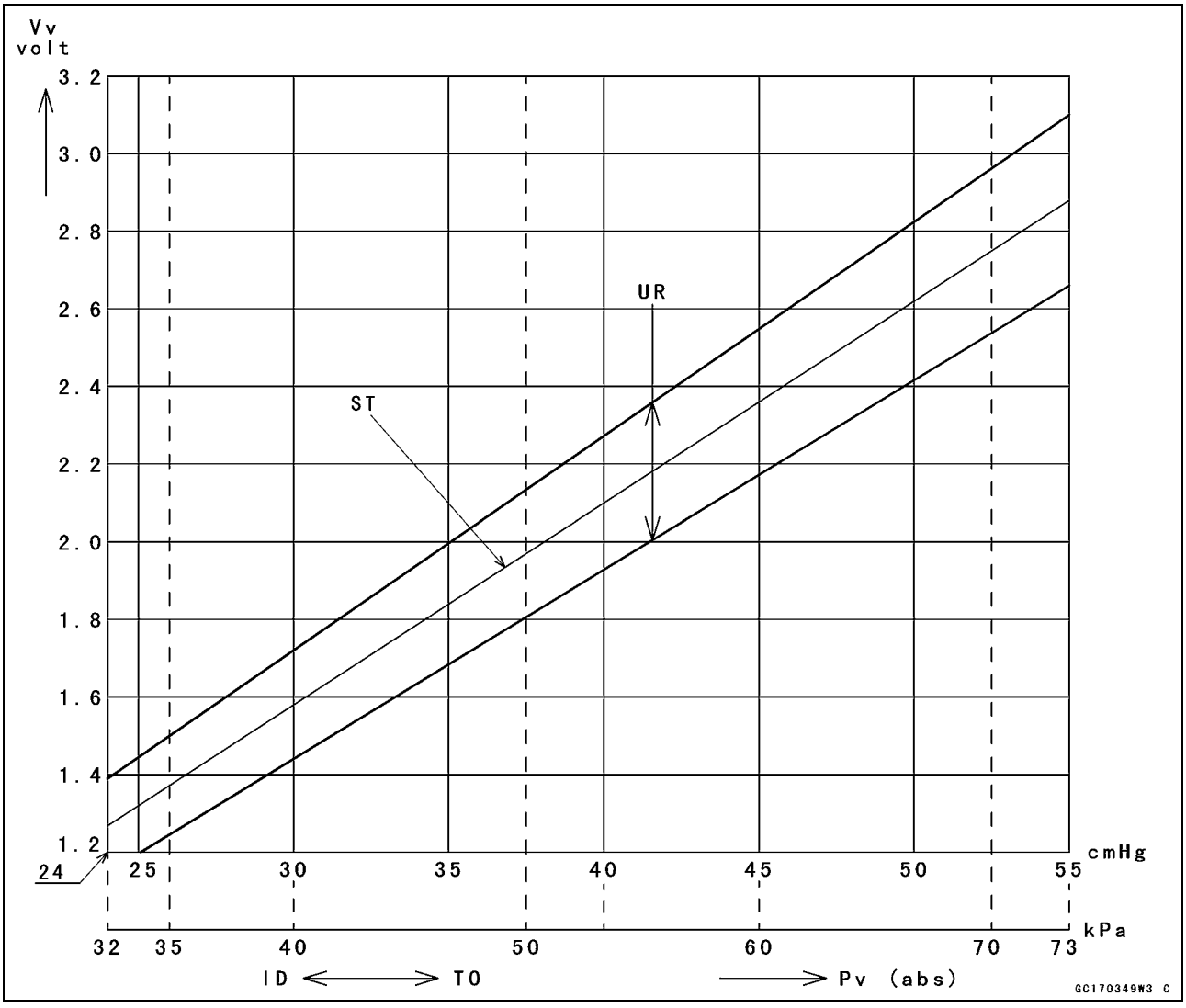

Downloaded from www.vulcanriders-sweden.org

Vacuum Sensor (Fault Code 12)

Pv = 55 ~ 86 cmHg

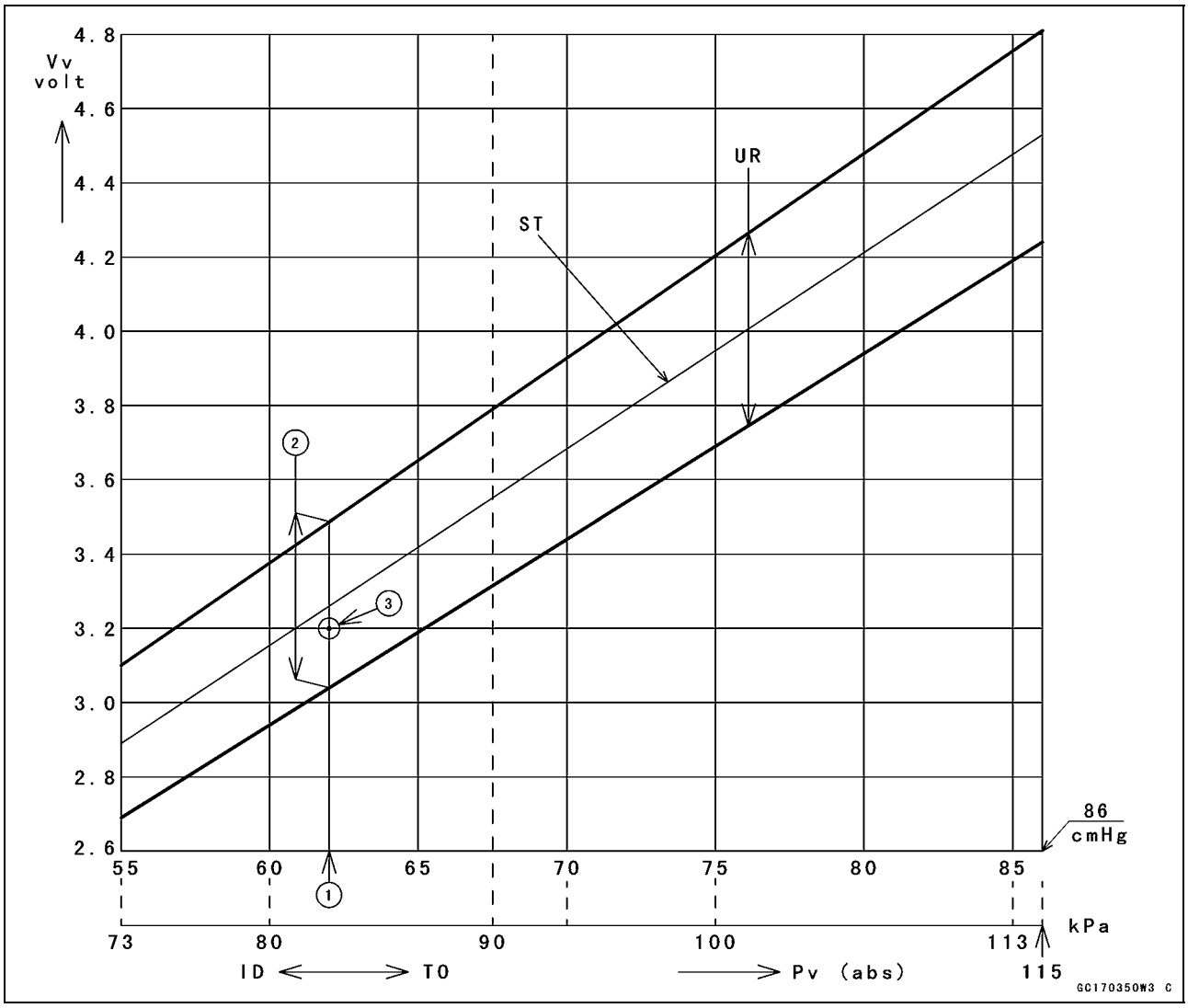

Vv: Vacuum Sensor Output Voltage (V)
(Digital Meter Reading)
Pv: Throttle Vacuum (absolute)
Ps: Standard Atmospheric Pressure (absolute)
ID: Idling
TO: Throttle Full Open
ST: Standard of Sensor Output Voltage (v)
UR: Usable Range of Sensor Output Voltage (v)

Downloaded from www.vulcanriders-sweden.org

Inlet Air Temperature Sensor (Fault Code 13)

Removal/Installation

CAUTION

Never drop the sensor, especially on a hard surface. Such a shock to the sensor can damage it.

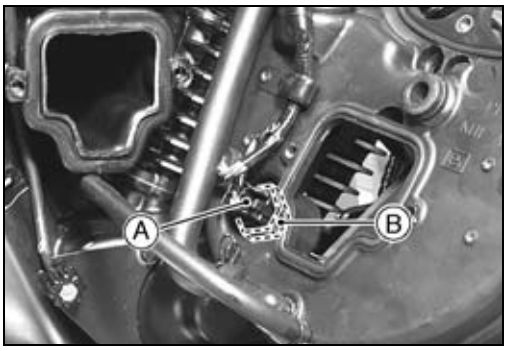

- Remove the right air cleaner base (see Right Air Cleaner Housing Removal in this chapter).
- Disconnect the connector [A] from the inlet air temperature sensor, and unscrew the nut [B].
- Remove the inlet air temperature sensor.

Torque - Inlet Air Temperature Sensor Nut: 7.8 N·m (0.80 kgf·m, 69 in·lb)

Output Voltage Inspection

NOTE

○*Be sure the battery is fully charged.*

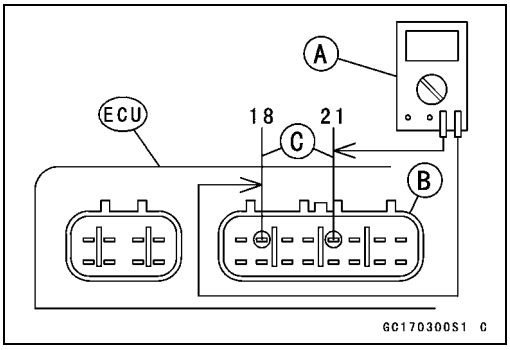

- Remove the ECU (see this chapter). Do not disconnect the ECU connectors.
- Connect a digital voltmeter [A] to the ECU connector [B], using two needle adapters [C].

Special Tool - Needle Adapter Set: 57001-1457

- Measure the sensor output voltage with the engine stopped and the connector joined.
- Turn the ignition switch ON.

Inlet Air Temperature Sensor Output Voltage
Connections to ECU Connector
Meter (+) → P lead (terminal 18)
Meter (–) → BR/BK lead (terminal 21)

Output Voltage at ECU
Standard: 2.6 V at inlet air temperature 20°C

NOTE

○*The output voltage changes according to the inlet air temperature.*

- Turn the ignition switch OFF.

★If the output voltage is out of the specified, check the ECU for its ground, and power supply (see ECU section in this chapter). If the ground and power supply are good, replace the ECU.

★If the output voltage is far out of the specified (e.g. when the wiring is open, the voltage is about 4.6 V), remove the right air cleaner base, and check the wiring (see next diagram).

- Remove the needle adapters, and apply silicone sealant to the seals of the ECU connector for waterproofing.

Silicone Sealant- Kawasaki Bond: 56019-120

★If the wiring is good, check the sensor resistance.

Downloaded from www.vulcanriders-sweden.org

Inlet Air Temperature Sensor (Fault Code 13)

Sensor Resistance Inspection

- Remove the inlet air temperature sensor (see this section).
- Suspend the sensor [A] in a container of machine oil so that the heat-sensitive portion and threaded portion are submerged.
- Suspend a thermometer [B] with the heat-sensitive portion [C] located in almost the same depth with the sensor.

NOTE

○*The sensor and thermometer must not touch the container side or bottom.*

- Place the container over a source of heat and gradually raise the temperature of the oil while stirring the oil gently for even temperature.
- Using a digital meter, measure the internal resistance of the sensor across the terminals at the temperatures shown in the table.

Inlet Air Temperature Sensor Resistance

Standard: 5.4 ~ 6.6 kΩ at 0°C (32°F)
2.26 ~ 2.86 kΩ at 20°C (68°F)
0.29 ~ 0.39 kΩ at 80°C (176°F)

★If the measurement is out of the range, replace the sensor.
★If the measurement is within the specified, replace the ECU.

- Clean off machine oil that inadvertently gets on the sensor, especially on the terminals with a high-flush point solvent.

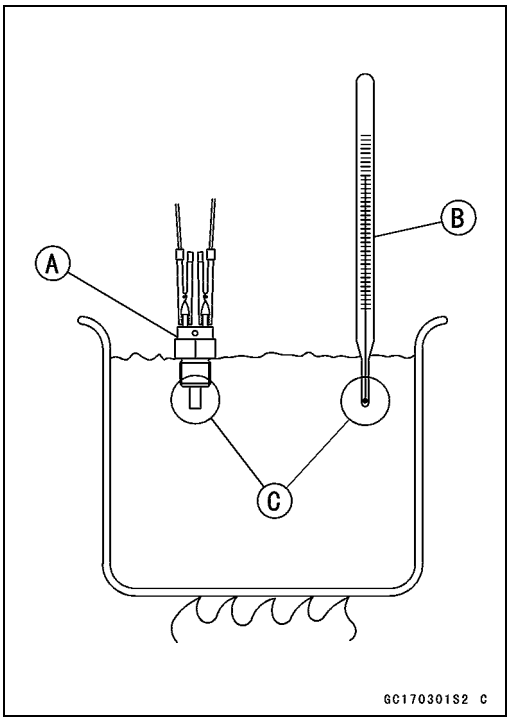

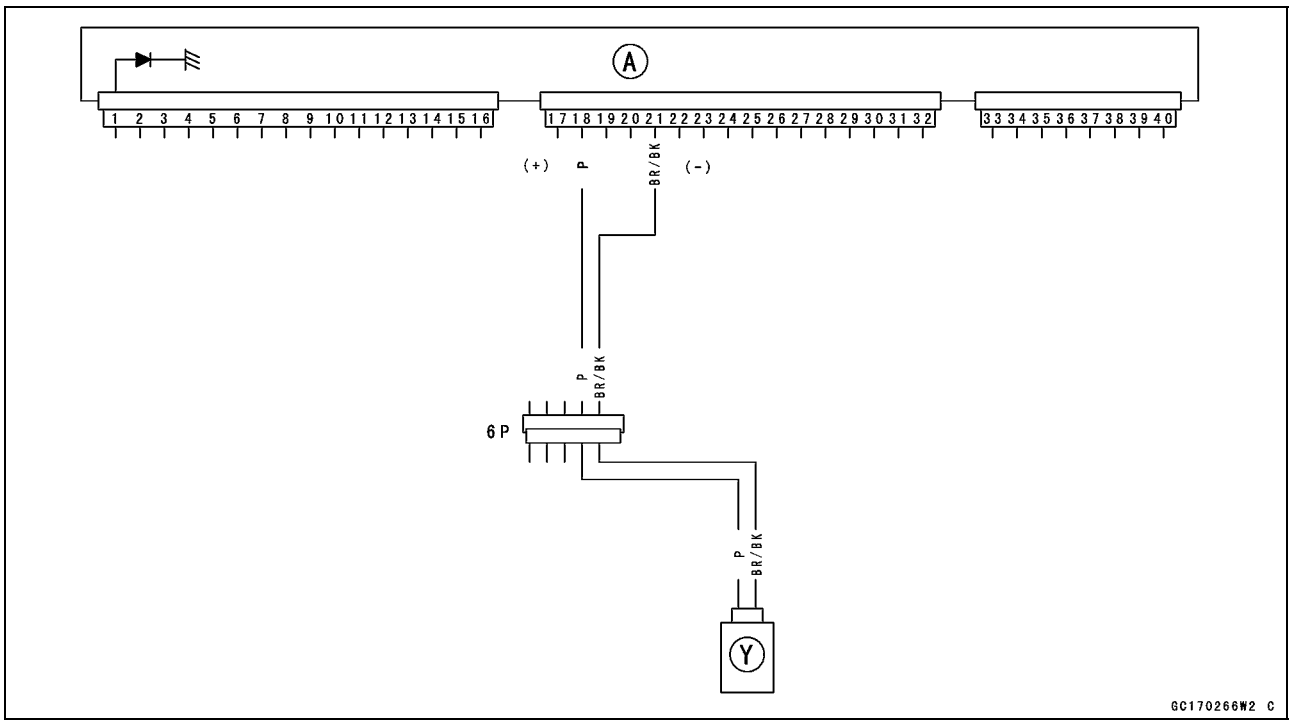

ECU [A]
Inlet Air Temperature Sensor [Y]

Downloaded from www.vulcanriders-sweden.org

Water Temperature Sensor (Fault Code 14)

Removal/Installation

CAUTION

Never drop the sensor, especially on a hard surface. Such a shock to the sensor can damage it.

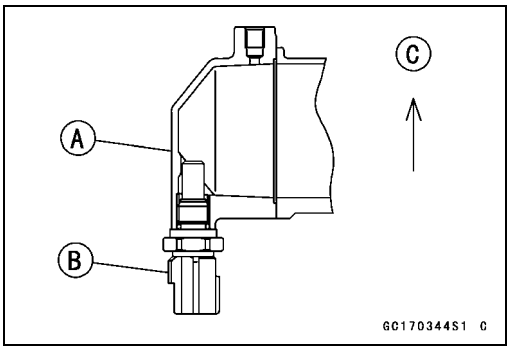

- Remove the thermostat housing [A] (see Thermostat Removal in the Cooling System chapter).
- Disconnect the sensor connector, and unscrew the water temperature sensor [B].
  Top [C]
- Apply silicone sealant to the threads of water temperature sensor.

Silicone Sealant- Kawasaki Bond: 56019-120

- Tighten:

Torque - Water Temperature Sensor: 18 N·m (1.8 kgf·m, 13 ft·lb)

- Fill the engine with coolant and bleed the air from the cooling system (see Coolant Filling in the Cooling System chapter).

Output Voltage Inspection

NOTE

○*Be sure the battery is fully charged.*

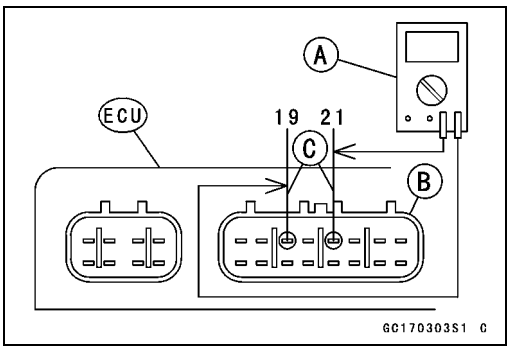

- Remove the ECU (see this chapter). Do not disconnect the connectors.
- Connect a digital voltmeter [A] to the ECU connector [B], using two needle adapters [C].

Special Tool - Needle Adapter Set: 57001-1457

- Measure the sensor output voltage with the engine stopped and the connector joined.
- Turn the ignition switch ON.

Downloaded from www.vulcanriders-sweden.org

Water Temperature Sensor (Fault Code 14)

Water Temperature Sensor Output Voltage
Connections to ECU

Meter (+) → O lead (terminal 19)

Meter (–) → BR/BK lead (terminal 21)

Output Voltage at ECU
Standard: 3.5 V at coolant temperature 20°C

NOTE

○*The output voltage changes according to the coolant temperature in the engine.*

- Turn the ignition switch OFF.

★If the output voltage is out of the specified, check the ECU for its ground, and power supply (see this chapter). If the ground and power supply are good, replace the ECU.

★If the output voltage is far out of the specified (e.g. when the wiring is open, the voltage is about 5V), check the wiring (see next diagram).

★If the wiring is good, check the water temperature sensor resistance.

- Remove the needle adapters, and apply silicone sealant to the seals of the ECU connector for waterproofing.

Silicone Sealant- Kawasaki Bond: 56019-120

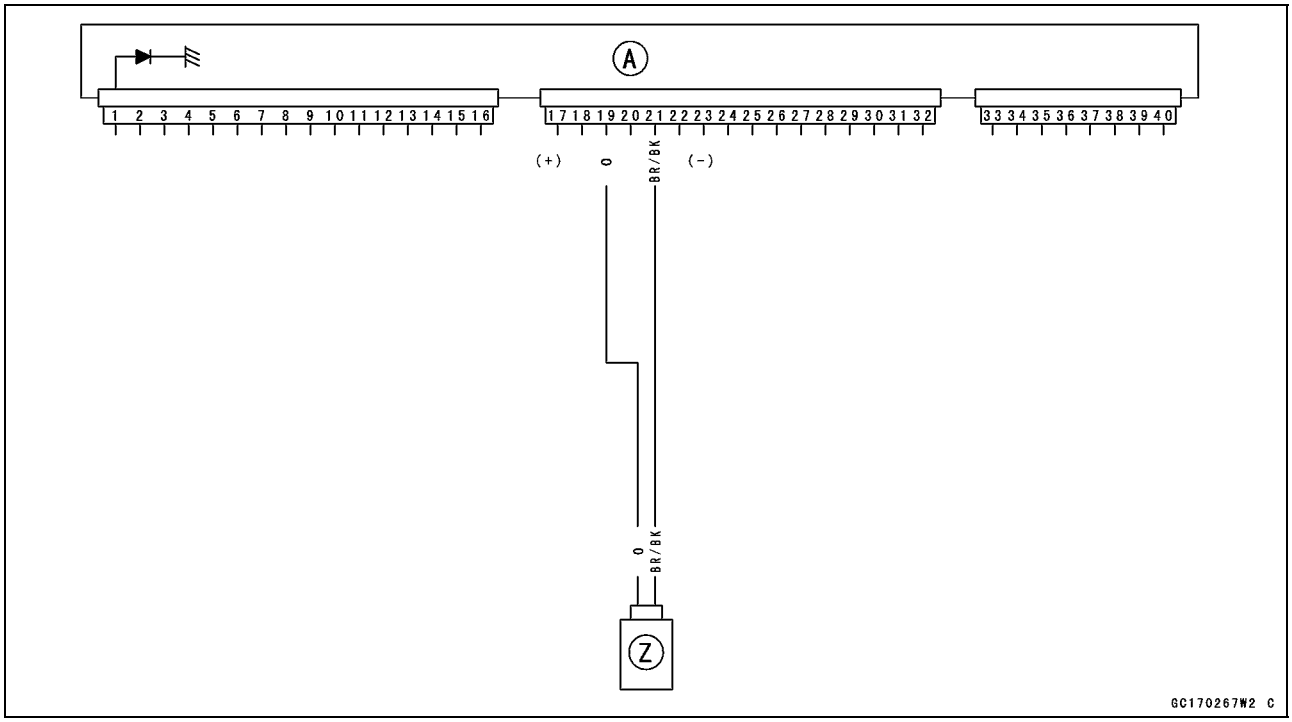

ECU [A]
Water Temperature Sensor [Z]

Downloaded from www.vulcanriders-sweden.org

Water Temperature Sensor (Fault Code 14)

Sensor Resistance Inspection

- Remove the water temperature sensor (see this section).
- Suspend the sensor [A] in a container of machine oil so that the heat-sensitive portion and threaded portion are submerged.
- Suspend a thermometer [B] with the heat-sensitive portion [C] located in almost the same depth with the sensor.

NOTE

○*The sensor and thermometer must not touch the container side or bottom.*

- Place the container over a source of heat and gradually raise the temperature of the oil while stirring the oil gently for even temperature.
- Using a digital meter, measure the internal resistance of the sensor across the terminals at the temperatures shown in the table.

Water Temperature Sensor Resistance

Standard: 2.162 ~ 3.112 kΩ at 20°C (68°F)
0.785 ~ 1.049 kΩ at 50°C (122°F)
0.207 ~ 0.253 kΩ at 100°C (212°F)

★If the measurement is out of the range, replace the sensor.
★If the measurement is within the specified, replace the ECU.

- Clean off machine oil that inadvertently gets on the sensor, especially on the terminals with a high-flush point solvent.

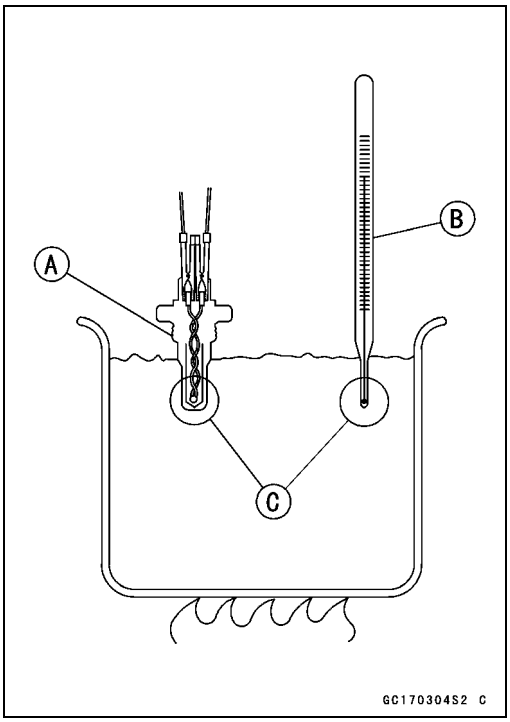

Downloaded from www.vulcanriders-sweden.org

Atmospheric Pressure Sensor (Fault Code 15)

Removal

CAUTION

Never drop the sensor, especially on a hard surface. Such a shock to the sensor can damage it.

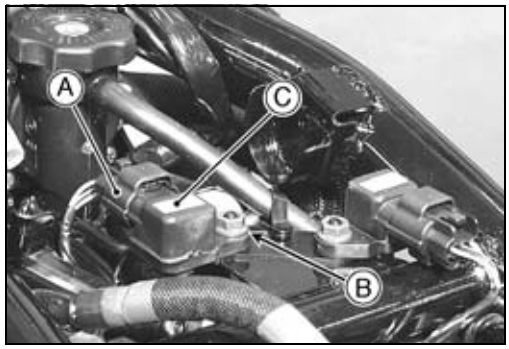

- Remove the fuel tank (see Fuel Tank section in this chapter).
- Disconnect the sensor connector [A] (rear view).
- Remove the atmospheric pressure sensor nut [B].
- Remove the atmospheric pressure sensor [C].

Installation

NOTE

○*The atmospheric pressure sensor is the same part as the vacuum sensor except that the vacuum sensor has a vacuum hose and different wiring.*

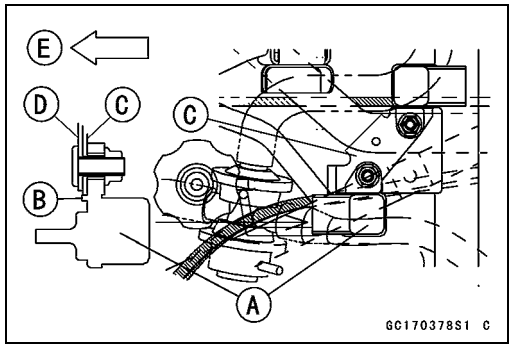

- Install the atmospheric pressure sensor [A].

○The stopper [B] must not be on the sensor holder [C].
Frame Bracket [D]
Front [E]

- Tighten:

Torque - Atmospheric Pressure Sensor Nut: 9.8 N·m (1.0 kgf·m, 87 in·lb)

- Install the fuel tank (see this chapter).

Input Voltage Inspection

NOTE

○*Be sure the battery is fully charged.*
○*The inspection is the same as "Input Voltage Inspection" of the throttle sensor or the vacuum sensor.*

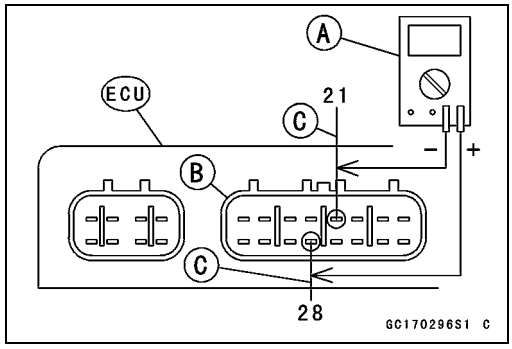

- Turn the ignition switch OFF.
- Remove the ECU (see this chapter). Do not disconnect the ECU connectors.
- Connect a digital voltmeter [A] to the connector [B], using two needle adapters [C].

Special Tool - Needle Adapter Set: 57001-1457

○Measure the input voltage with the engine stopped, and with the connectors joined.

- Turn the ignition switch ON.

Atmospheric Pressure Sensor Input Voltage
Connections to ECU
Meter (+) → BL/W lead (terminal 28)
Meter (–) → BR/BK lead (terminal 21)

Input Voltage at ECU
Standard: 4.75 ~ 5.25 V DC

★If the reading of input voltage is less than the standard range, check the ECU for its ground, and power supply (see this chapter). If the ground and power supply are good, replace the ECU.

Downloaded from www.vulcanriders-sweden.org

Atmospheric Pressure Sensor (Fault Code 15)

★If the reading is within the standard range, remove the fuel tank, and check the input voltage again at the sensor connector [A] (front view).
Needle Adapters [B]

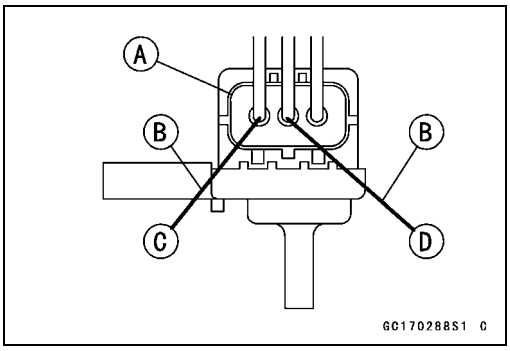

- Measure the input voltage with the engine stopped, and with the connector joined.
- Turn the ignition switch ON.

Atmospheric Pressure Sensor Input Voltage
Connections to Sensor (rear view)
Meter (+) → BL/W lead [C]
Meter (–) → BR/BK lead [D]

Input Voltage at Sensor Connector
Standard: 4.75 ~ 5.25 V DC

★If the reading is out of the standard range, check the wiring (see wiring diagram in this section).
★If the reading is good, the input voltage is normal. Check the output voltage.
- Turn the ignition switch OFF.
- Remove the needle adapters.
- Apply silicone sealant to the seals of the sensor connector for waterproofing.

Silicone Sealant- Kawasaki Bond: 56019-120

Output Voltage Inspection
- Measure the output voltage at the ECU in the same way as input voltage inspection. Note the following.

Digital Meter [A]
ECU Connector [B]
Needle Adapters [C]

Special Tool - Needle Adapter Set: 57001-1457

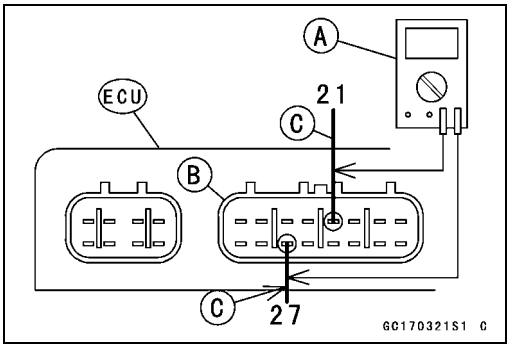

Atmospheric Pressure Sensor Output Voltage
Connections to ECU
Meter (+) → BL/Y lead (terminal 27)
Meter (–) → BR/BK lead (terminal 21)

Output Voltage
Usable Range: 3.74 ~ 4.26 V DC at the standard atmospheric pressure (101.32 kPa, or 76 cmHg abs.)

NOTE

○*The output voltage changes according to the local atmospheric pressure.*
○*The atmospheric sensor output voltage is based on a nearly perfect vacuum in the small chamber of the sensor. So, the sensor indicates absolute atmospheric pressure.*

★If the output voltage is within the usable range, check the ECU for its ground, and power supply (see this chapter). If the ground and power supply are good, replace the ECU.

Downloaded from www.vulcanriders-sweden.org

Atmospheric Pressure Sensor (Fault Code 15)

★If the output voltage is far out of the usable range, remove the fuel tank, and check the output voltage at the sensor connector [A] (when the wiring is open, the output voltage is about 1.8 V).
Needle Adapters [B]

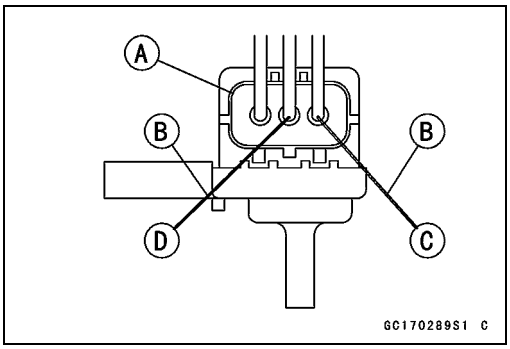

Atmospheric Pressure Sensor Output Voltage
Connections to Sensor (rear view)
Meter (+) → BL/Y lead [C]
Meter (–) → BR/BK lead [D]

Output Voltage at Sensor
Usable Range: 3.74 ~ 4.26 V DC at the standard atmospheric pressure (101.32 kPa, 76 cmHg abs)

★If the output voltage is normal, check the wiring for continuity (see next diagram).
★If the output voltage is out of the usable range, replace the sensor.

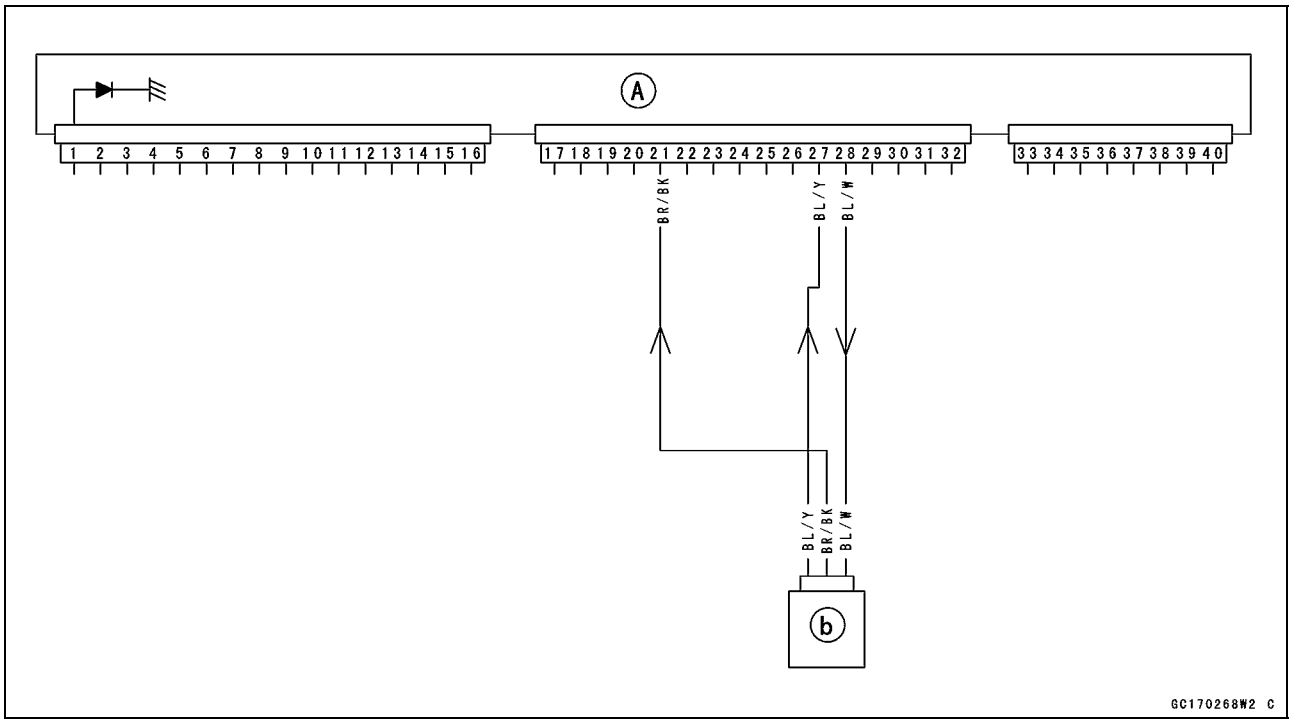

→: Signal
ECU [A]
Atmospheric Pressure Sensor [b]

Downloaded from www.vulcanriders-sweden.org

Atmospheric Pressure Sensor (Fault Code 15)

★If you need to check the atmospheric pressure sensor for various altitudes other than sea level, check the output voltage as follows:

○Determine the local altitude (elevation).

★If you know the local atmospheric pressure using a barometer, substitude the atmospheric pressure for Pv (Throttle Vacuum) in the vacuum sensor chart (see Vacuum Sensor section in this chapter).

○Get the usable range of the atmospheric pressure sensor output voltage in the same way as Output Voltage Inspection of the vacuum sensor and check if Va (output voltage) is within the usable range or not.

★If you know the local altitude, use the following chart.

For example:

Suppose the local altitude is 1 300 m (4 200 ft) and the sensor output voltage Va is 3.3 V.

Plot this H (1 300 m (4 200 ft)) at a point [1] on the following chart and draw a vertical line through the point. Then, you can get the usable range [2] of the sensor output voltage.

Usable Range = 3.2 ~ 3.64 V

Plot Va (3.3 V) on the vertical line → Point [3]

Results: In the chart, Va is within the usable range and the sensor is normal.

Downloaded from www.vulcanriders-sweden.org

Atmospheric Pressure Sensor (Fault Code 15)

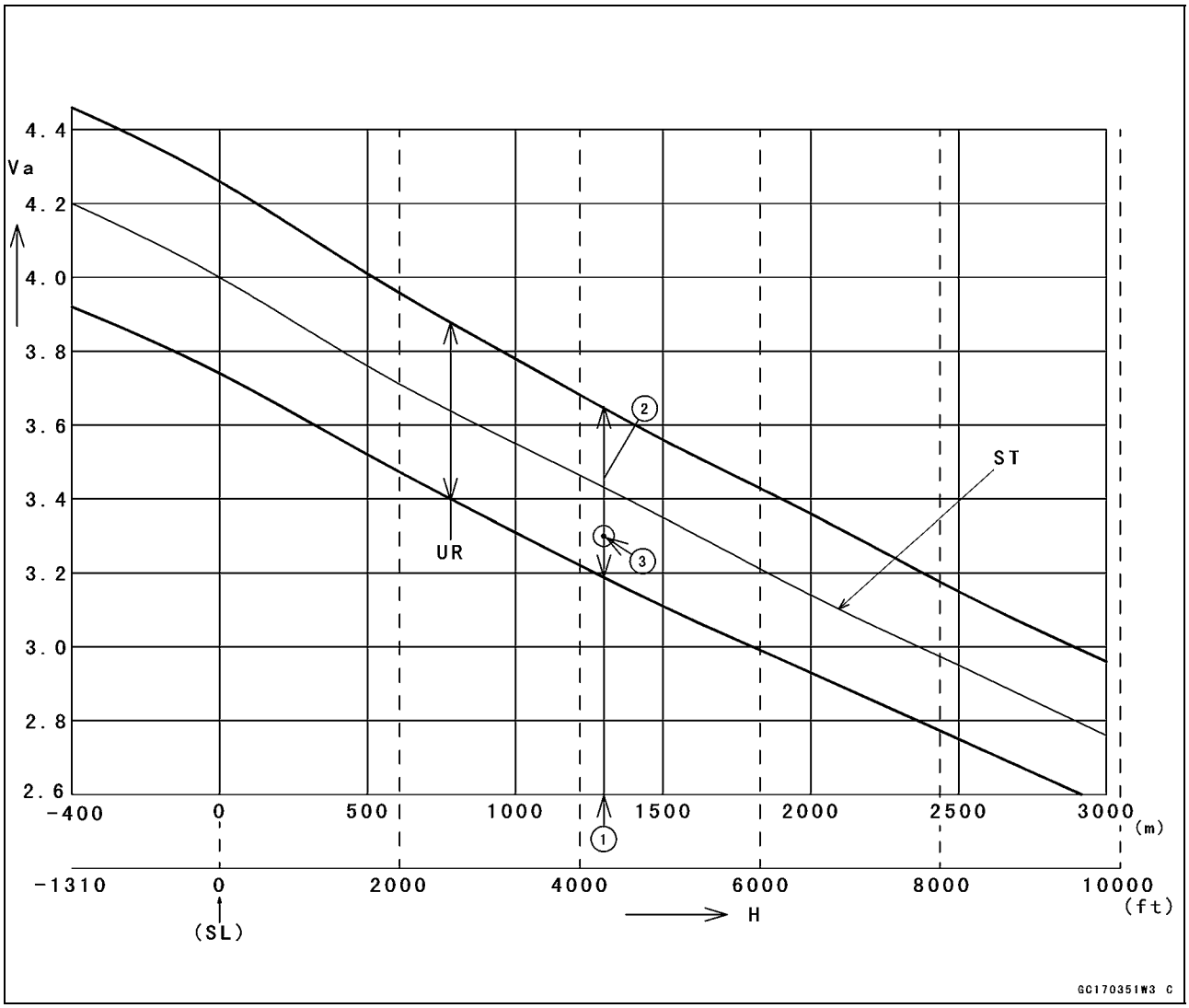

H: Altitude (m or feet)
SL: Sea Level (0 m)
ST: Standard of Sensor Output Voltage (v)
UR: Usable Range of Sensor Output Voltage (v)
Va: Atmospheric Pressure Sensor Output Voltage (v)

Downloaded from www.vulcanriders-sweden.org

Pickup Coils (#1, #2: Fault Code 21, 22)

Pickup Coil #1: for Front Cylinder (Fault Code 21)
Pickup Coil #2: for Rear Cylinder (Fault Code 22)

Pickup Coil Removal/Installation

- See Ignition System section in Electrical System chapter.

Pickup Coil Inspection

- The pickup coils have no power source, and when the engine stops, the pickup coils generates no signals.
- Crank the engine and measure the peak voltage of the pickup coils (see Electrical System chapter) in order to check the coils.
- Check the wiring for continuity, using the following diagram.

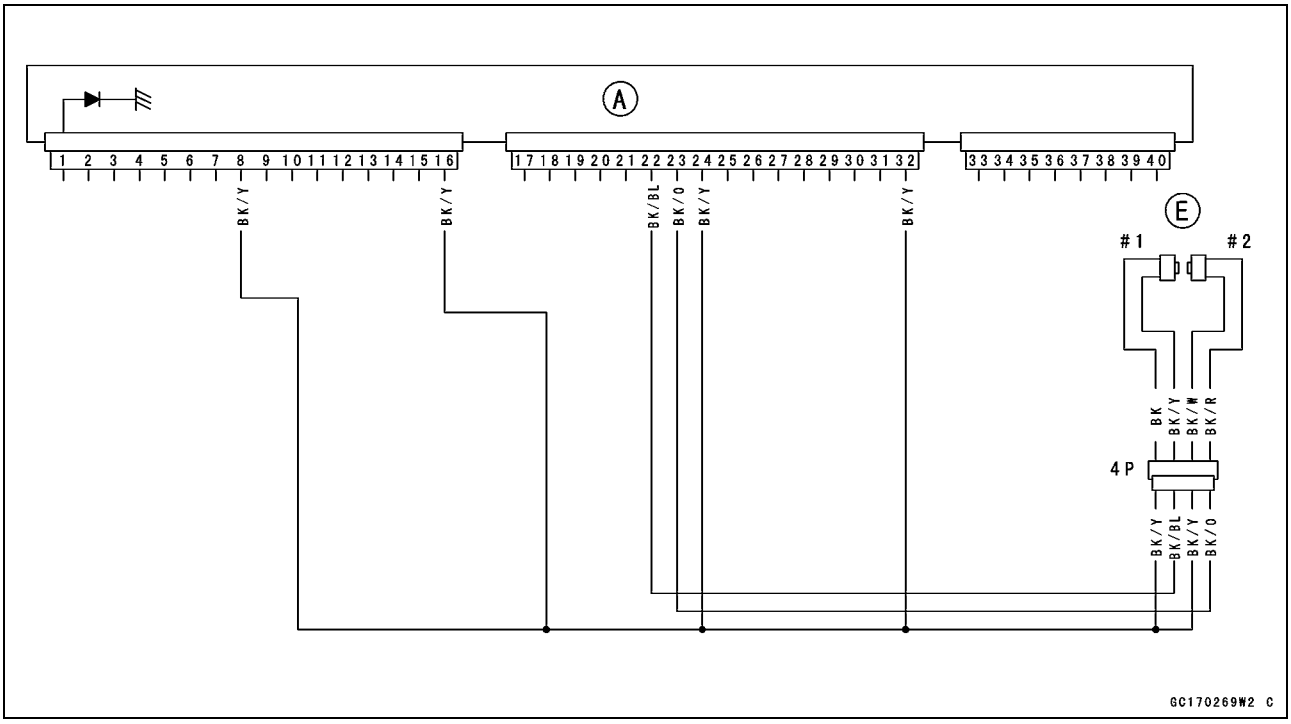

ECU [A]
Pickup Coils [E]

Downloaded from www.vulcanriders-sweden.org

Vehicle-down Sensor (Fault Code 31)

This sensor has a weight [A] with two magnets inside, and sends a signal to the ECU. But when the motorcycle banks (40 ~ 50°) or more to either side (in fact falls down), the weight turns and shuts off the signal. The ECU senses this change, and stops the fuel pump, the fuel injectors, and the ignition system.

Hall IC [B]

When the motorcycle is down, the ignition switch is left ON. If the starter button is pushed, the electric starter turns but the engine doesn't start. To start the engine again, raise the motorcycle, turn the ignition switch OFF, and then ON. When the ignition switch is turned ON, current flows through the latch-up circuit and the transistor in the circuit is turned ON to unlock the latch-up circuit.

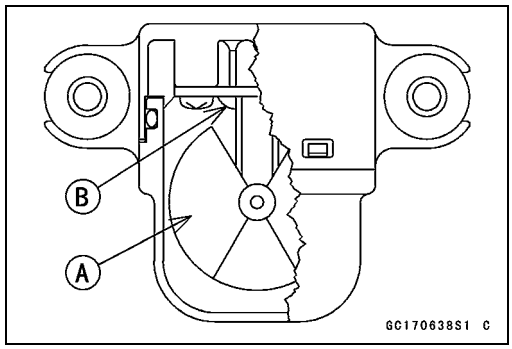

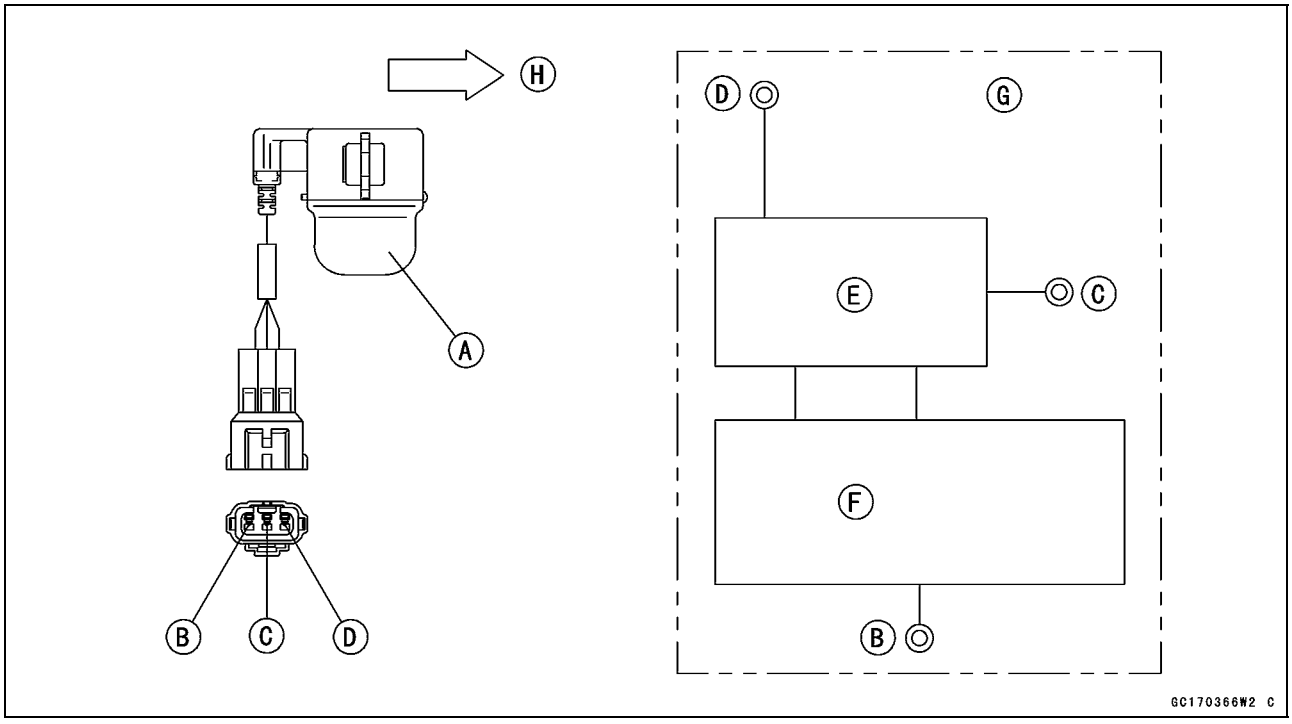

Vehicle-down Sensor [A]
Ground Terminal [B]
Output Terminal [C]
Power Source Terminal [D]
Constant Voltage Circuit [E]
Hall IC (Integrated Circuit, or Latch-up Circuit) [F]
Vehicle-down Sensor Circuit [G]
Front [H]

Removal

CAUTION

Never drop the down-sensor, especially on a hard surface. Such a shock to the sensor can damage it.

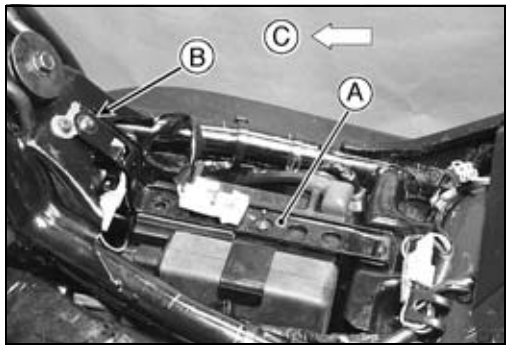

● Remove:
Front Seat (see Frame chapter)
Battery Holder [A] and Screw [B]
Front [C]

Downloaded from www.vulcanriders-sweden.org

Vehicle-down Sensor (Fault Code 31)

- Remove the screw [B] and take out the vehicle-down sensor [A].
- Raise the lock, and disconnect the connector to complete sensor removal.

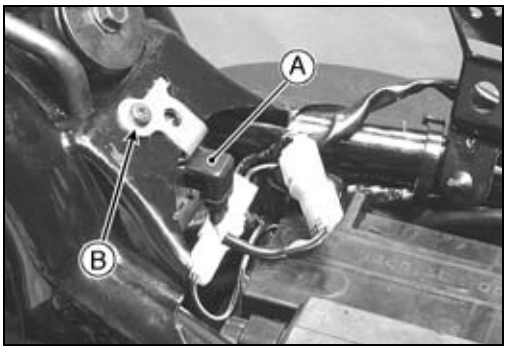

Installation

- Install the vehicle-down sensor assy [A] so that the sensor connector [B] faces backward. The arrow mark [C] on the sensor front must point upward.
- Insert the sensor bracket hook [D] into the hole as shown.
- Tighten the sensor bracket screw [E].
- Install the battery holder [F] and tighten the holder screw [G].
  Front [H]
- Install the front seat (see Frame chapter).

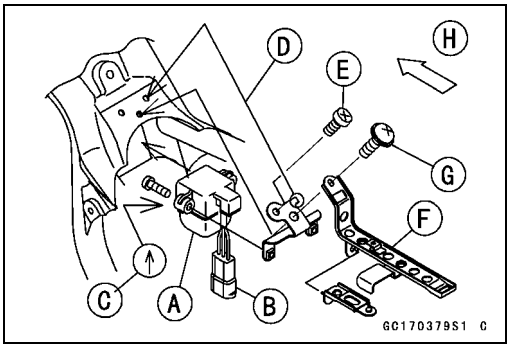

⚠ WARNING

Incorrect installation of the vehicle-down sensor could cause sudden loss of engine power. The rider could lose balance during certain riding situations, like leaning over in a turn, with the potential for an accident resulting in injury or death. Ensure that the down sensor is held in place by the bracket and its screw as shown.

Inspection

NOTE

○*Be sure the battery is fully charged.*

- Take out the vehicle-down sensor [A] (see this section). Do not disconnect the connector [B].
- Connect a digital volt meter [C] to the connector (natural, 3P), using two needle adapters [D].

Special Tool - Needle Adapter Set: 57001-1457

- Turn the ignition switch ON, and measure the power source voltage with the connector joined.

Vehicle-down Sensor Power Source Voltage
Connections to Sensor
Meter (+) → BR lead [E]
Meter (–) → BK/Y lead [F]

Power Source Voltage at Sensor
Standard: Battery Voltage (12.5 V or more)

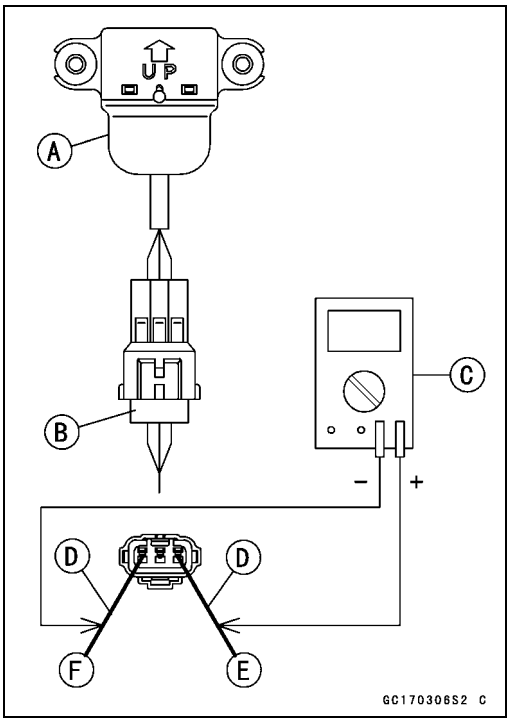

- Turn the ignition switch OFF.

★If there is no battery voltage, check the following:
Battery (see Electrical System chapter)
Ignition Fuse 10 A in Junction Box
Wiring for Vehicle-down Sensor Power Source (see next diagram)

Downloaded from www.vulcanriders-sweden.org

Vehicle-down Sensor (Fault Code 31)

★If the power source is normal, check the output voltage.
- Connect a digital volt meter [A] to the connector (natural, 3P), using two needle adapters [B].
- Turn the ignition switch ON, and measure the output voltage with the connector joined.

○Tilt the sensor (40 ~ 50°) or more [C] right or left, then hold the sensor almost vertical [D] with the arrow mark pointed up, and measure the output voltage.

Vehicle-down Sensor Output Voltage
Connections to Sensor
Meter (+) → Y/G lead [E]
Meter (–) → BK/Y lead [F]

Output Voltage at Sensor
Standard: with sensor tilted 40 ~ 50° or more right or left: 3.7 ~ 4.4 V with sensor arrow mark pointed up: 0.4 ~ 1.4 V

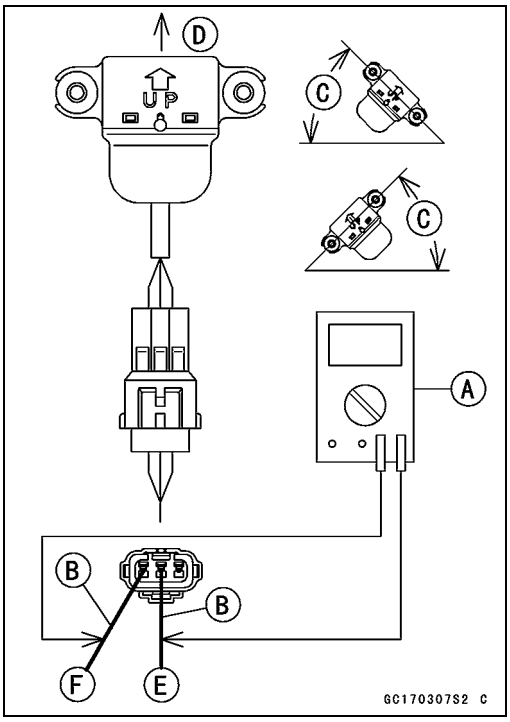

NOTE

○*If you need to test again, turn the ignition switch OFF, and then ON.*

- Turn the ignition switch OFF.
- Remove the needle adapters, and apply silicone sealant to the seals of the vehicle-down sensor connector for waterproofing.

Silicone Sealant- Kawasaki Bond: 56019-120

★If the output voltage is normal, the wiring is suspect. Check the wiring.

★If the wiring is good, check the ECU for its ground and power supply (see this chapter). If the ground and power supply are good, replace the ECU.

★If the output voltage is out of the specified, replace the vehicle-down sensor.

Downloaded from www.vulcanriders-sweden.org

Vehicle-down Sensor (Fault Code 31)

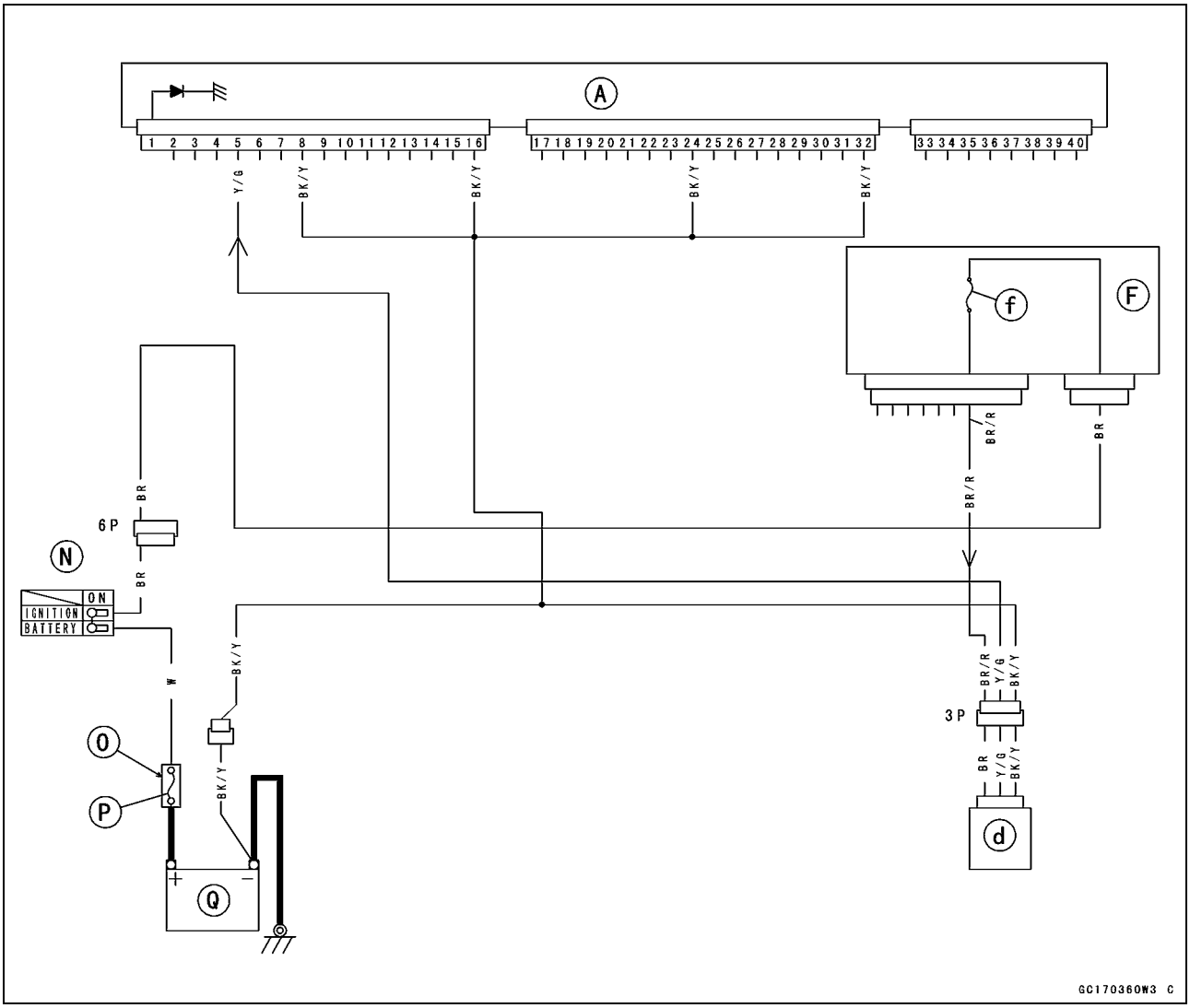

→: Signal
ECU [A]
Junction Box [F]
Ignition Switch [N]
Starter Relay [O]
Main Fuse 30 A [P]
Battery [Q]
Vehicle-down Sensor [d]
Ignition Fuse 10 A [f]

Downloaded from www.vulcanriders-sweden.org

Fuel Injectors (#1, #2: Fault Code 41, 42)

Fuel Injector #1: Front Fuel Injector for Front Cylinder (Fault Code 41)
Fuel Injector #2: Rear Fuel Injector for Rear Cylinder (Fault Code 42)

CAUTION

Never drop the injector, especially on a hard surface. Such a shock to the injector can damage it.

Injector Removal

⚠ WARNING

Gasoline is extremely flammable and can be explosive under certain conditions. Turn the ignition switch OFF. Disconnect the battery (–) lead terminal. Do not smoke. Make sure the area is well-ventilated and free from any source of flame or sparks; this includes any appliance with a pilot light.
Be prepared for fuel spillage; any spilled fuel must be completely wiped up immediately.

- Check to see that the battery (–) lead terminal is disconnected.
- Remove:
  Fuel Tank (see this chapter)
- Remove the high pressure fuel hose joint from the pipe for the delivery joint and take out the high presure fuel hose (fuel supply) [A].
- Remove:
  Front and Rear Injector Connectors [B]
  Vacuum Hose [C] from T-joint

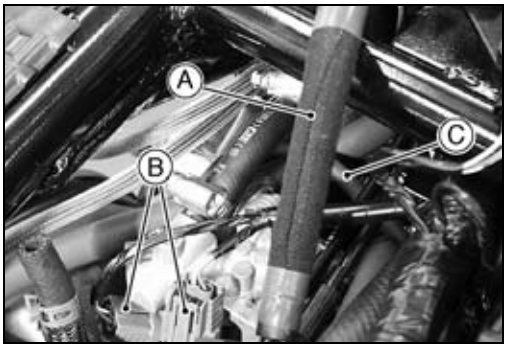

- Unscrew the three screws [A], and lift up the delivery joint [D] with the injectors [B], the fuel pipe, and the screw collar [C] left installed.
- Remove the injectors from the delivery joint.

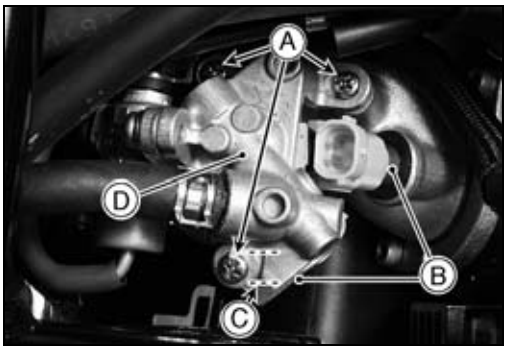

- If necessary, remove the screws [A] and the fuel hose [B], and then take off the pressure regulator [C].

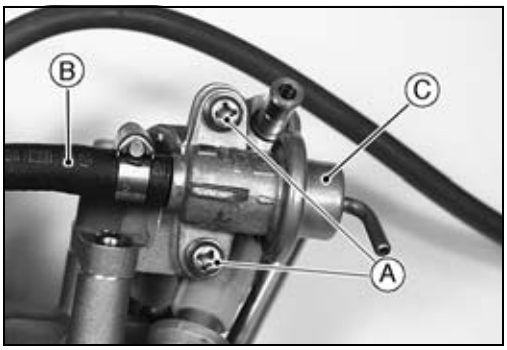

Downloaded from www.vulcanriders-sweden.org

Fuel Injectors (#1, #2: Fault Code 41, 42)

○The screen [A] comes off from the pressure regulator [B].
Delivery Joint [C]
Front [D]

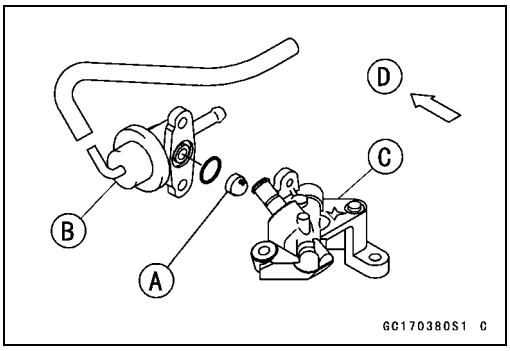

● Clean the screen with high-flash point solvent to remove any particles.

⚠ WARNING

Clean the screen in a well-ventilated area, and take care that there is no spark or flame anywhere near the working area. Because of the danger of highly flammable liquids, do not use gasoline or low-flash point solvents.

● Check the screen carefully for any damage: holes and broken wires.

★If the screen is damaged, replace it.

● Remove the seal [A], O-ring [B], and seal ring [C]. Discard them to prevent fuel and air leakage.

○The screen [D] cannot be removed.

● Tape the injector holes of the inlet manifold.

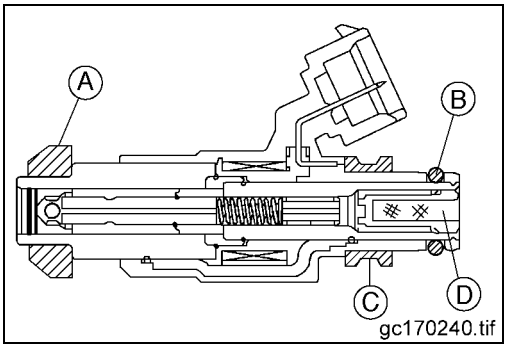

CAUTION

If dirt gets through the injector holes into the engine, excessive engine wear and possibly engine damage will occur.

Injector Installation

○The front and rear injectors are the same.

● Replace the seal [A], O-ring [B], and seal ring [C] with new ones, and install them onto the injector [D].

● Apply engine oil to the O-ring, and install them onto the injector.

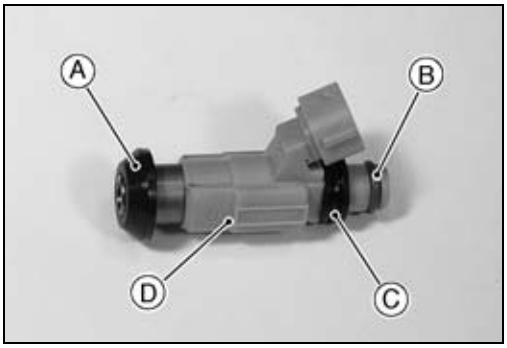

CAUTION

To avoid air and fuel leak, be careful not to get dirt or dust on the O-ring. Be careful not to damage the O-ring.

● Apply engine oil to the O-ring [A], and install each injector [B] into the delivery joint [C].

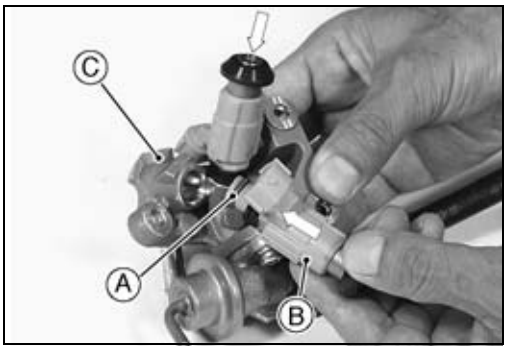

Downloaded from www.vulcanriders-sweden.org

Fuel Injectors (#1, #2: Fault Code 41, 42)

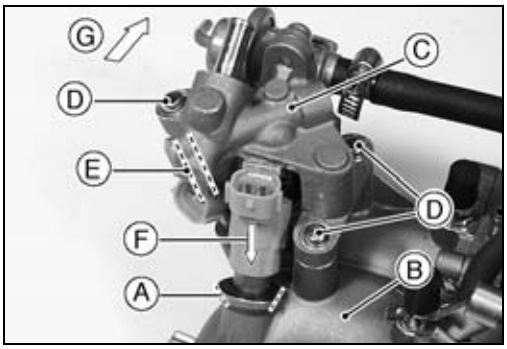

- Check that there is no dirt or dust on the injector seating surface [A] of the inlet manifold [B].
- Check that the two dowel pins are in place in the inlet manifold.
- Fit the end of the injector into the delivery joint [C], and install them along with the joint screws [D], and the screw collar [E] onto the inlet manifold.

○Fit [F] the tip of the injector evenly into the inlet manifold.
Front [G]

- Tighten:

Torque - Delivery Joint Screws: 3.4 N·m (0.35 kgf·m, 30 in·lb)
Pressure Regulator Screws: 4.9 N·m (0.50 kgf·m, 43 in·lb)

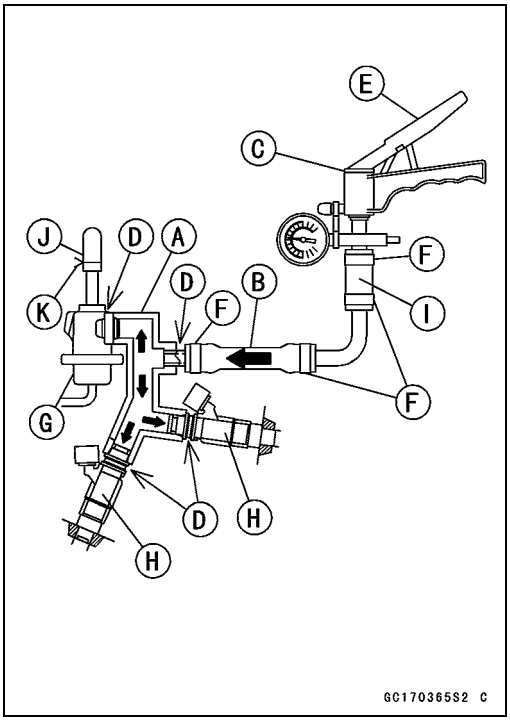

- Check the injector fuel line for leakage as follows:

○Connect a commercially available vacuum/pressure pump [C] and a rubber hose [I] to the fuel hose [B] of the delivery joint [A] as shown.
○Plug the outlet of the pressure regulator [G] with a rubber plug [J] (e.g. Plug: Part No. 92068-006).
○Bind the plug with a wire [K].
○Apply a soap and water solution to the areas [D] shown.
○Watching the pressure gauge, squeeze the pump lever [E], and build up the pressure until the pressure reaches the maximum pressure.

Fuel Line Maximum Pressure
Standard: 310 kPa (3.2 kgf/cm², 46 psi)

CAUTION

During pressure testing, do not exceed the maximum pressure for which the system is designed.

- Watch the gauge for at least 6 seconds.

★If the pressure holds steady, the system is good.
★If the pressure drops at once, or if bubbles are found in the area, the line is leaking. Perform the following as necessary.
○Retighten the fuel hose clamps [F].

Torque - Fuel Hose Clamp Screws: 1.5 N·m (0.15 kgf·m, 13 in·lb)

○Replace:
O-ring of Pressure Regulator Flange
O-ring, and Seal Ring of Injectors [H]
Pressure Regulator, Delivery Joint, and Injectors
○Repeat the leak test, and check the fuel line for no leakage.

Downloaded from www.vulcanriders-sweden.org

Fuel Injectors (#1, #2: Fault Code 41, 42)

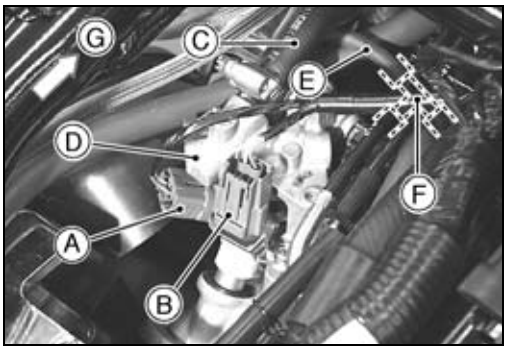

- Connect:
  Front Injector Connector [A] (BL/R, W/R leads)
  Rear Injector Connector [B] (BL/G, W/R leads)
  Fuel Hose [C] to Delivery Joint [D]
  Vacuum Hose [E] to T-Joint [F]
  Front [G]
- Run the hoses correctly (see Cable, Wire, and Hose Routing section in the General Information chapter).
- Tighten:

Torque - Fuel Hose Clamp Screws: 1.5 N·m (0.15 kgf·m, 13 in·lb)

- Install the fuel tank (see this chapter) and connect the battery (–) terminal.

Power Source Voltage Inspection

NOTE

○*Be sure the battery is fully charged.*

- Turn the ignition switch OFF.
- Remove the ECU (see this chapter). Do not disconnect the ECU connectors.
- Connect a digital voltmeter [A] to the connector [B], using the needle adapter [C].

Special Tool - Needle Adapter Set: 57001-1457

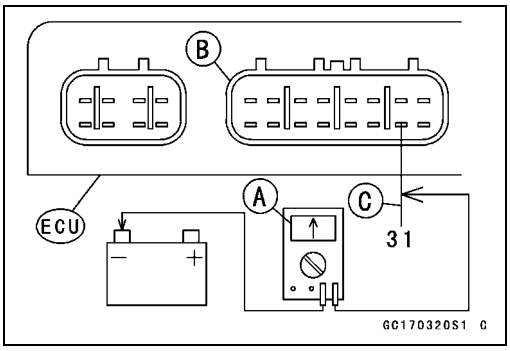

○Measure the power source voltage with the engine stopped, and with the connectors joined.

- Turn the ignition switch ON.

Injector Power Source Voltage at ECU
Connections to ECU
Meter (+) → W/R lead (terminal 31)
Meter (–) → Battery (–) Terminal

Power Source Voltage at ECU
Standard: Battery Voltage (12.5 V or more)

★If the power source voltage is less than the standard, check the ECU for its ground, and power supply (see this chapter). If the ground and power supply are good, replace the ECU.

Downloaded from www.vulcanriders-sweden.org

Fuel Injectors (#1, #2: Fault Code 41, 42)

★If the reading is normal, remove the fuel tank, and check the power source voltage at the injector connector [A], using the needle adapter [B].

- Measure the power source voltage with the engine stopped, and the connector joined, using a digital meter.
- Turn the ignition switch ON.

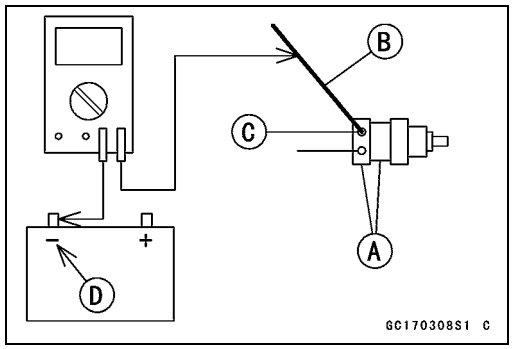

Injector Power Source Voltage at Injector
Connections to Injector #1, #2
Meter (+) → W/R lead [C]
Meter (–) → Battery (–) Terminal [D]

Power Source Voltage at Injector Connector
Standard: Battery Voltage (12.5 V or more)

- Turn the ignition switch OFF.

★If the reading is out of the standard, check the wiring (see wiring diagram in this section).

★If the reading is good, and the power source voltage is normal, check the output voltage.

Output Voltage Inspection

- Measure the output voltage at the ECU connector in the same way as power source voltage inspection. Note the following.

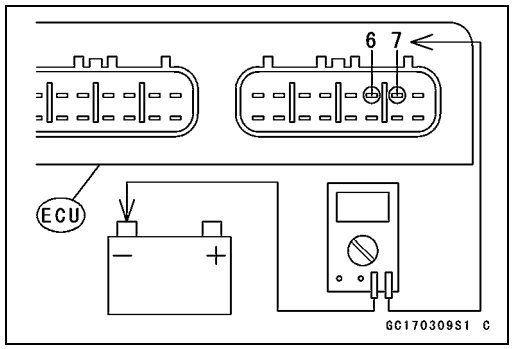

Injector Output Voltage at ECU
Connections for Injector #1
Meter (+) → BL/R lead (terminal 7)
Meter (–) → Battery (–) Terminal
Connections for Injector #2
Meter (+) → BL/G lead (terminal 6)
Meter (–) → Battery (–) Terminal

Output Voltage at ECU
Standard: Battery Voltage (12.5 V or more)

★If the output voltage is normal, check the ECU for its ground, and power supply (see this chapter). If the ground and power supply are good, replace the ECU.

Downloaded from www.vulcanriders-sweden.org

Fuel Injectors (#1, #2: Fault Code 41, 42)

★If the output voltage is out of the standard, remove the fuel tank, and check the output voltage at the injector connector [A], using the needle adapter [B] (when the wiring is open, the output voltage is 0 V).

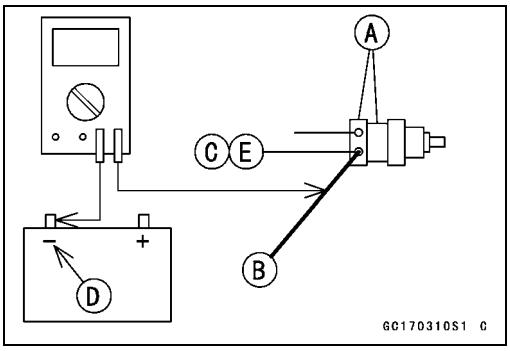

Special Tool - Needle Adapter Set: 57001-1457

Injector Output Voltage at Injector
Connections to Injector #1
Meter (+) → BL/R lead [C]
Meter (–) → Battery (–) Terminal [D]
Connections to Injector #2
Meter (+) → BL/G lead [E]
Meter (–) → Battery (–) Terminal [D]

Output Voltage at Injector Connector
Standard: Battery Voltage (12.5 V or more)

★If the output voltage is normal, check the wiring for continuity (see next diagram). If the wiring is good, perform "Audible Inspection" for confirmation.
★If the output voltage is out of the standard, perform "Audible Inspection" for confirmation.

Audible Inspection
- Remove the left air cleaner housing (see this chapter).
- Start the engine.
- Apply the tip of a screwdriver [A] to the injector [C]. Put the grip end onto your ear, and listen whether the injector is clicking or not.

○A sound scope [B] can also be used.

- Do the same for the other injector.
  Front [D]

★If all the injectors click at a regular intervals, the injectors are good.
○The click interval becomes shorter as the engine speed rises.
★If either injector doesn't click, perform the "Injector Signal Test" for injector operation.

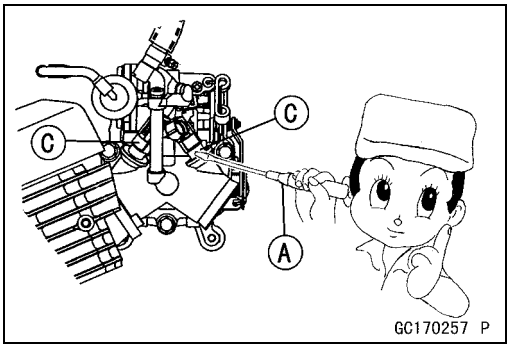

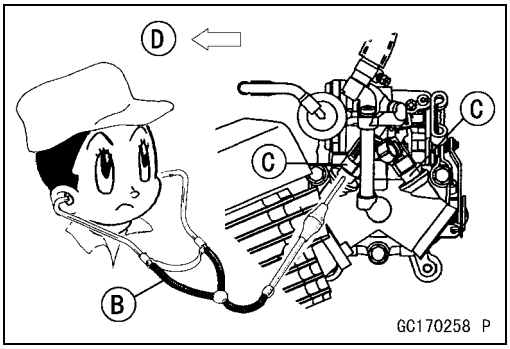

Downloaded from www.vulcanriders-sweden.org

Fuel Injectors (#1, #2: Fault Code 41, 42)

Injector Signal Test

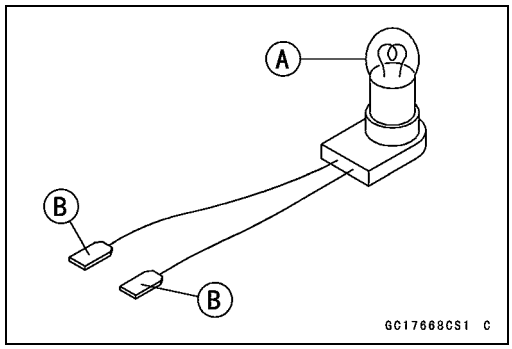

- Prepare two test light sets with terminals as shown.
  Rating of Bulb [A]: 12 V × 3 ~ 3.4 W
  Terminal (Width × Thickness) [B]: 1.8 × 0.8 mm (0.07 × 0.03 in.)

CAUTION

Do not use larger terminals than specified above. A larger terminal could damage the injector main harness connector, leading to harness repair or replacement.
Be sure to connect bulbs in series. The bulb works as a current limiter to protect the solenoid in the injector from excessive current.

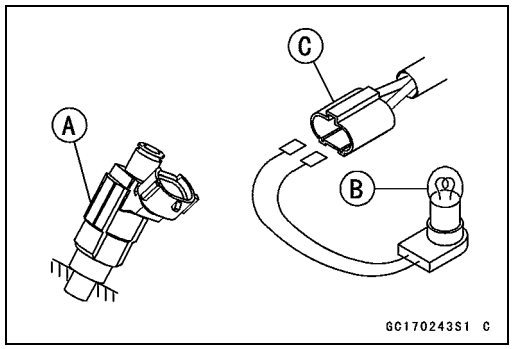

- Remove the fuel tank (see this chapter).
- Plug the fuel hose ends.
- Remove connectors for injector [A].
- Connect each test light set [B] to the injector main harness connector [C].
- Connect the battery (–) lead terminal.
- While cranking the engine with the starter motor, watch the test lights.

★If the test lights flicker at regular intervals, the injector circuit in the ECU, and the wiring are good. Perform the "Injector Resistance Inspection".

○Injector signals can be also confirmed by connecting the hand tester (× 10 V AC) instead of the test light set to the injector main harness connector. Crank the engine with the starter motor, and check to see if the needle oscillates at regular intervals.

Special Tool - Hand Tester: 57001-1394

★If the test light doesn't flicker (or the tester needle doesn't oscillates), check the wiring and connectors again. If the wiring is good, replace the ECU.

Injector Resistance Inspection

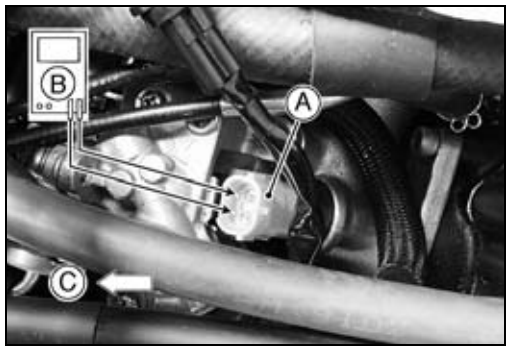

- Remove the fuel tank (see this chapter).
- Disconnect the connector from the injector [A] (see Injector Removal).
- Measure the injector resistance with a digital voltmeter [B].
  Front [C]

Injector Resistance
Connections to Injector

Meter (+)		Meter (–)
#1: W/R	←→	BL/R Terminal
#2: W/R	←→	BL/G Terminal

Standard: 14.2 ~ 14.8 Ω

★If the reading is out of the range, perform the "Injector Unit Test".

★If the reading is normal, perform the "Injector Unit Test" for confirmation.

Downloaded from www.vulcanriders-sweden.org

Fuel Injectors (#1, #2: Fault Code 41, 42)

Injector Unit Test

- Use two wires [A] and the same test light set [B] as in "Injector Signal Test".
  Rating of Bulb [C]: 12 V × (3 ~ 3.4) W
  12 V Battery [D]

CAUTION

Be sure to connect the bulb in series. The bulb works as a current limiter to protect the solenoid in the injector from excessive current.

- Connect the test light set to the injector [E] as shown.
- Open and connect [F] the end of the wire to the battery (–) terminal repeatedly. The injector should click.

★If the injector does not click, replace the injector.

★If the injector clicks, check the wiring again. If the wiring is good, replace the ECU.

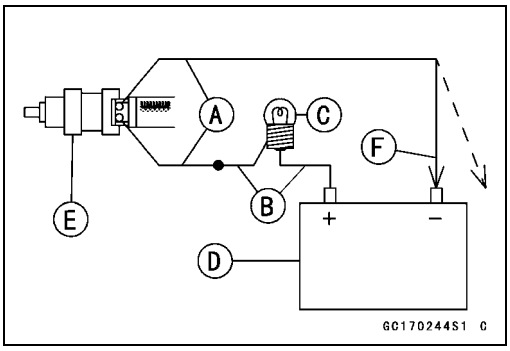

Downloaded from www.vulcanriders-sweden.org

Fuel Injectors (#1, #2: Fault Code 41, 42)

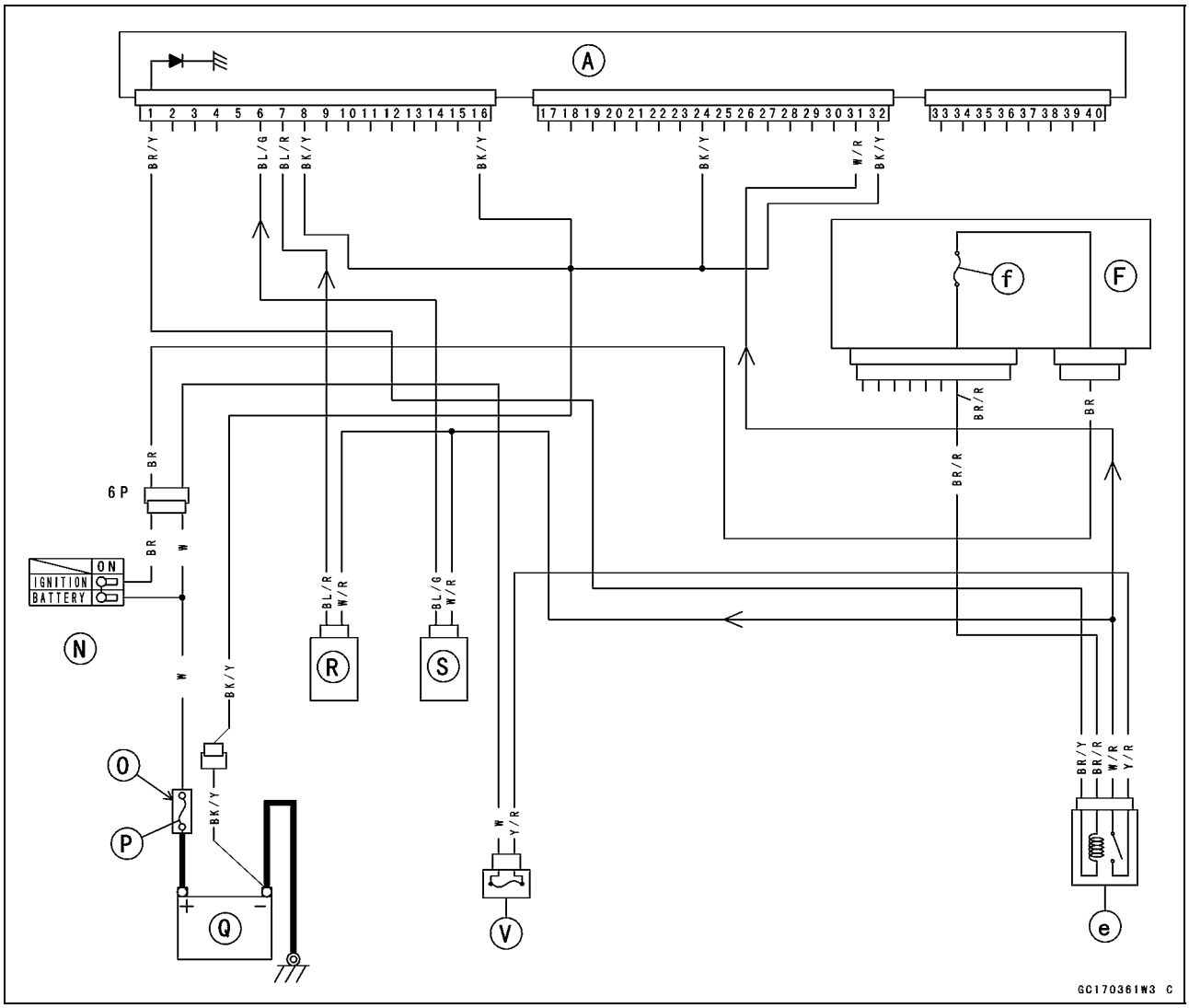

→: Signal
ECU [A]
Junction Box [F]
Ignition Switch [N]
Starter Relay [O]
Main Fuse 30 A [P]
Battery [Q]
Fuel Injector #1 [R]
Fuel Injector #2 [S]
DFI Fuse 15 A [V]
DFI Main Relay [e]
Ignition Fuse 10 A [f]

Downloaded from www.vulcanriders-sweden.org

In-tank Fuel Pump (Fault Code 45)

Fuel Pump Removal

CAUTION

Never drop the fuel pump, especially on a hard surface. Such a shock to the pump can damage it.

⚠ WARNING

Gasoline is extremely flammable and can be explosive under certain conditions. Make sure the area is well-ventilated and free from any source of flame or sparks; this includes any appliance with a pilot light. Do not smoke. Turn the ignition switch OFF. Disconnect the battery (–) terminal.
To make fuel spillage minimum, draw the fuel out from the fuel tank with a pump as much as possible when the engine is cold. Be prepared for fuel spillage; any spilled fuel must be completely wiped up immediately.

○The in-tank fuel pump shortens the DFI fuel lines, and suppresses vaper lock in the fuel hoses.
- Remove the fuel tank (see this chapter).

○Draw the fuel out from the fuel tank with a commercially available pump.
○Be careful of fuel spillage from the fuel tank since fuel still remains in the fuel tank and fuel pump. Plug all the fuel pipes of the fuel tank.
- Turn the fuel tank upside down.
- Unscrew the fuel pump bolts [A], and take out the fuel pump and gasket.

  Front [B]
- Discard the fuel pump gasket.

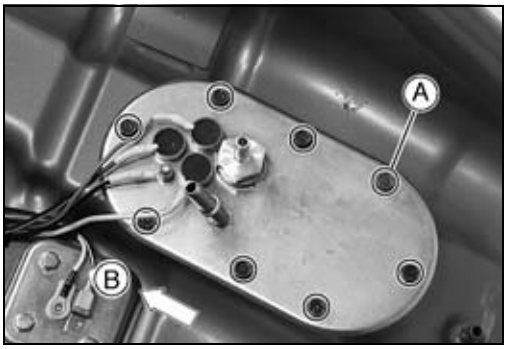

Pump Screen Cleaning

⚠ WARNING

Clean the pump screen in a well-ventilated area, and take care that there are no sparks or flame anywhere near the working area. Because of the danger of highly flammable liquids, do not use gasoline or low-flash point solvent to clean the pump screen.

- Remove the fuel pump [A] along with the pump screen [B].
- Discard the fuel pump gasket [D].
- Prepare a container [C] filled with a high-flash point solvent.
- Dip and shake the pump in the solvent to remove dirt and fuel deposits [E] from the pump screen.
- Dry the pump and screen by lightly applying compressed air.
- Replace the fuel pump gasket with a new one.
- Install the fuel pump (see this section).

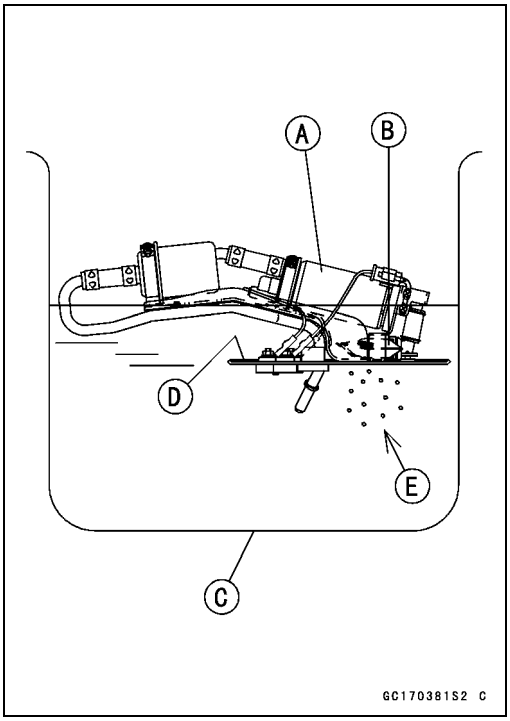

Downloaded from www.vulcanriders-sweden.org

In-tank Fuel Pump (Fault Code 45)

Fuel Filter Cleaning

○The fuel filter cannot be cleaned or checked.

★If the fuel filter is suspected of clogging or being damaged, replace it with the fuel pump as a set.

Fuel Pump Installation

- Clean the pump screen (see Pump Filter Cleaning).
- Remove dirt or dust from the fuel pump by lightly applying compressed air.
- Replace the fuel pump gasket with a new one.
- Install a new pump gasket [A] with its tab [B] facing back and right [D] (top view).
  Front [C]

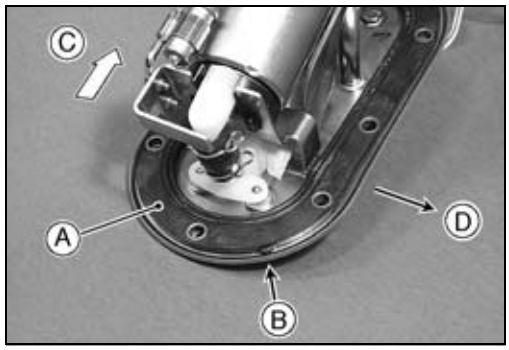

- Install the fuel pump [A] into the fuel tank [B] in the order shown.
  Front [C]
  First [1] ~ Last [4]

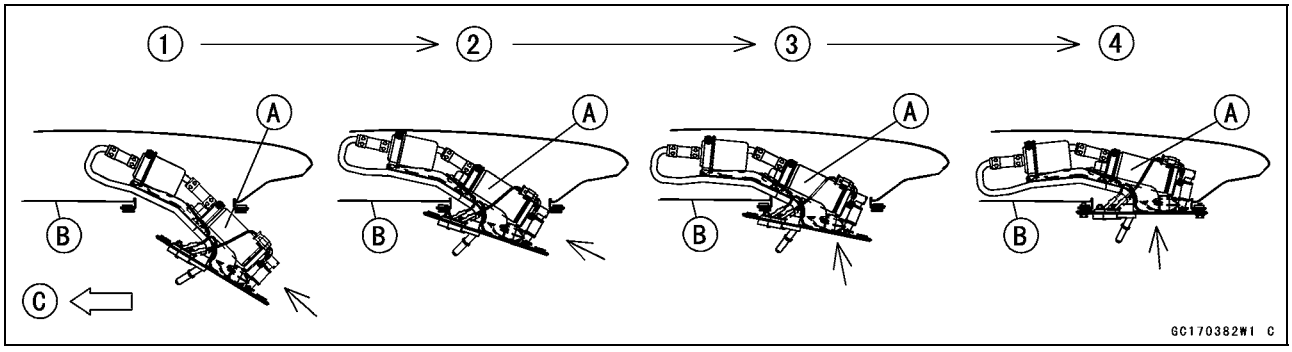

- Check that the fuel pump terminals are in place.
  Pump Motor BK/W (–) Lead [A]
  Pump Motor W/R (+) Lead [B]
  Fuel Reserve Switch R/BK (+) Lead [C]
  Fuel Reserve Switch BK/Y (–) Lead [D]
  Front [E]
- Apply a non-permanent locking agent to the threads of the fuel pump bolts.
- Tighten the fuel pump bolts to a snug fit following the tightening sequence shown.
- Following the tightening sequence, tighten the pump bolts to the specified torque.
- Apply:

Non-permanent Locking Agent- Fuel Pump Bolts

- Tighten:

Torque - Fuel Pump Bolts: 6.9 N·m (0.70 kgf·m, 61 in·lb)

- Tighten the pump bolts again to check the tightness in the order shown.

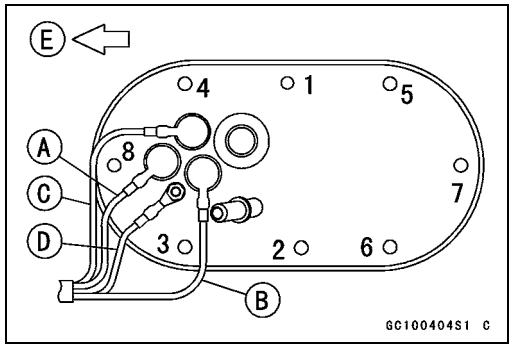

Downloaded from www.vulcanriders-sweden.org

In-tank Fuel Pump (Fault Code 45)

- Secure the fuel level sensor leads [A], and fuel pump leads [B] on the fuel tank [C] with the welded clamps [D]. Front [E]
- Install the fuel tank (see this chapter).

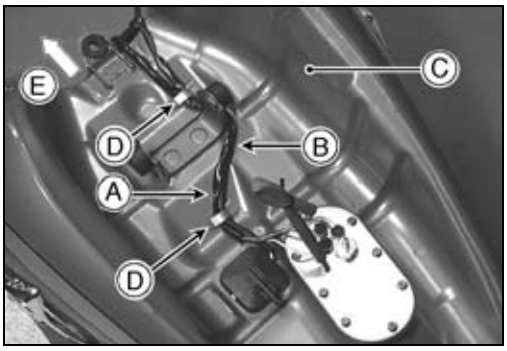

Operation Inspection

NOTE

○*Be sure the battery is fully charged.*

- Turn the ignition switch ON and make sure that the fuel pump operates (make light sounds) for 3 seconds, and then stops.
- Turn the ignition switch OFF.

★If the pump does not work as described above, inspect the operating voltage.

Operating Voltage Inspection

NOTE

○*Be sure the battery is fully charged.*

- Turn the ignition switch OFF.
- Remove the ECU (see this chapter). Do not disconnect the ECU connectors.
- Connect the hand tester (× 25 V DC) to the connectors [A], using two needle adapters[B].

Special Tools - Hand Tester: 57001-1394
Needle Adapter Set: 57001-1457

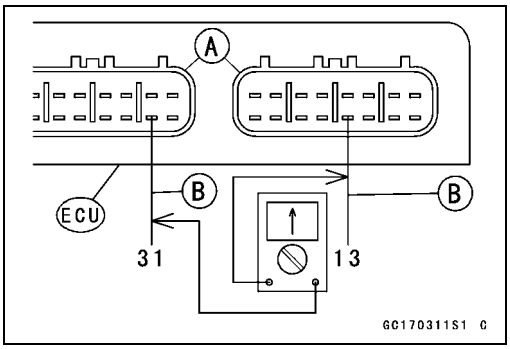

○Measure the operating voltage with the engine stopped, and with the connector joined.

- Turn the ignition switch ON.

○The tester needle should indicate battery voltage for 3 seconds, and then 0 V.

Pump Operating Voltage at ECU
Connections to ECU

Tester (+) → W/R lead (terminal 31)
Tester (–) → BK/W lead (terminal 13)

Operating Voltage at ECU
Reading: Battery Voltage (12.5 V or more) for 3 seconds, and then 0 V.

★If the reading stays on battery voltage, and never shows 0 V, the wiring is suspect. Check the wiring of the fuel pump.

★If there is no battery voltage at all, check the pump operating voltage at the fuel pump connector as follows.

Downloaded from www.vulcanriders-sweden.org

In-tank Fuel Pump (Fault Code 45)

- Remove the fuel tank bolt and nut (see Fuel Tank Removal in this chapter).
- Raise the fuel tank [A] and take out the fuel pump connector [B].

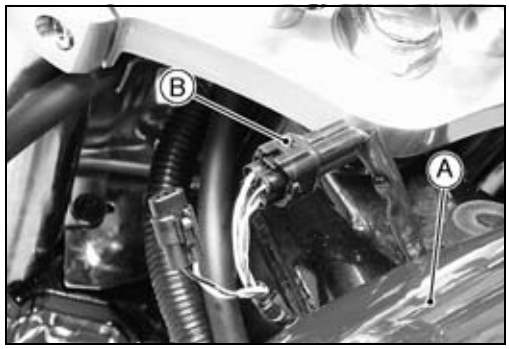

- Measure the pump operating voltage at the fuel pump connector with the connector joined.
  Hand Tester [A]
  Pump Connector [B]
  Needle Adapters [C]

Pump Operating Voltage at Pump Connections to Pump Connector

Tester (+) → W/R lead [D]

Tester (–) → BK/W lead [E]

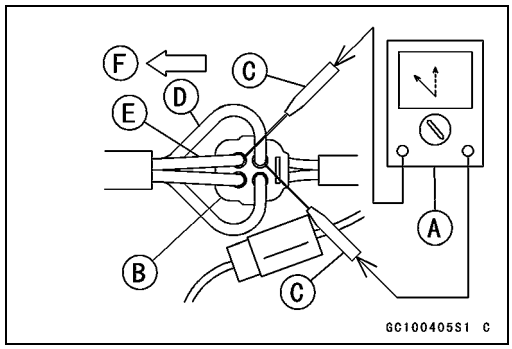

Operating Voltage at Pump Connector

Reading: Battery Voltage (12.5 V or more) for 3 seconds, and then 0 V

Front [F]

★If the voltage is in specification, but the pump doesn't work, replace the pump.

★If there is still no battery voltage, check the pump power source voltage (see next section).

Power Source Voltage Inspection

NOTE

○*Be sure the battery is fully charged.*

○*The inspection is the same as "Power Source Voltage Inspection" of the ISC valves.*

- Connect a digital voltmeter [A] to the connector [B], using the needle adapter [C].

Special Tool - Needle Adapter Set: 57001-1457

○Measure the power source voltage with the engine stopped, and with the connector joined.

- Turn the ignition switch ON.

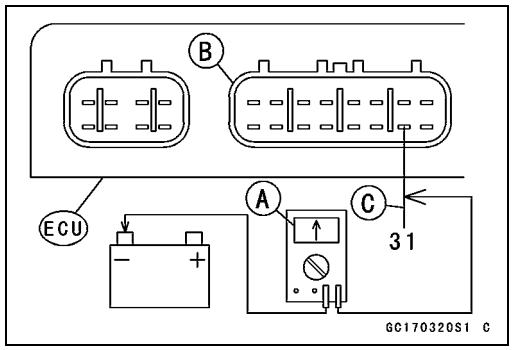

Pump Power Source Voltage Connections to ECU

Tester (+) → W/R lead (terminal 31)

Tester (–) → Battery (–) Terminal

Power Source Voltage at ECU

Standard: Battery Voltage (12.5 V or more)

★If the reading is less than the standard, check the ECU for its ground, and power supply (see this chapter). If the ground and power supply are good, replace the ECU.

★If the reading is normal, measure the power source voltage at the fuel pump connector.

Downloaded from www.vulcanriders-sweden.org

In-tank Fuel Pump (Fault Code 45)

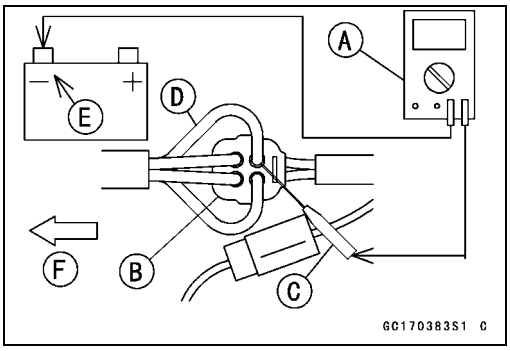

- Connect a digital voltmeter [A] to the fuel pump connector [B] (black, 4P), using the needle adapter [C].

  Special Tool - Needle Adapter Set: 57001-1457

- Measure the power source voltage with the engine stopped, and with the pump connector joined.
- Turn the ignition switch ON.

Pump Power Source Voltage
Connections to Pump Connector
Tester (+) → W/R lead [D]
Tester (–) → Battery (–) Terminal [E]

Power Source Voltage at Pump Connector
Standard: Battery Voltage (12.5 V or more)

Front [F]

★If the reading is good, the power source voltage is normal. Replace the pump.

★If the reading is below the standard, check the following:
Battery
Main Fuse 30 A in Starter Relay (see Electrical System chapter)
DFI Fuse 15 A (see this chapter)
Ignition Fuse 10 A in Junction Box (see Electrical System chapter)
DFI Main Relay (see this chapter)
Wiring for Fuel Pump Power Source (see next diagram)
Vehicle-down Sensor (see this chapter)

- After inspection, remove the needle adapter, and apply silicone sealant to the seal of the fuel pump connector for waterproofing.

  Silicone Sealant- Kawasaki Bond: 56019-120

Downloaded from www.vulcanriders-sweden.org

In-tank Fuel Pump (Fault Code 45)

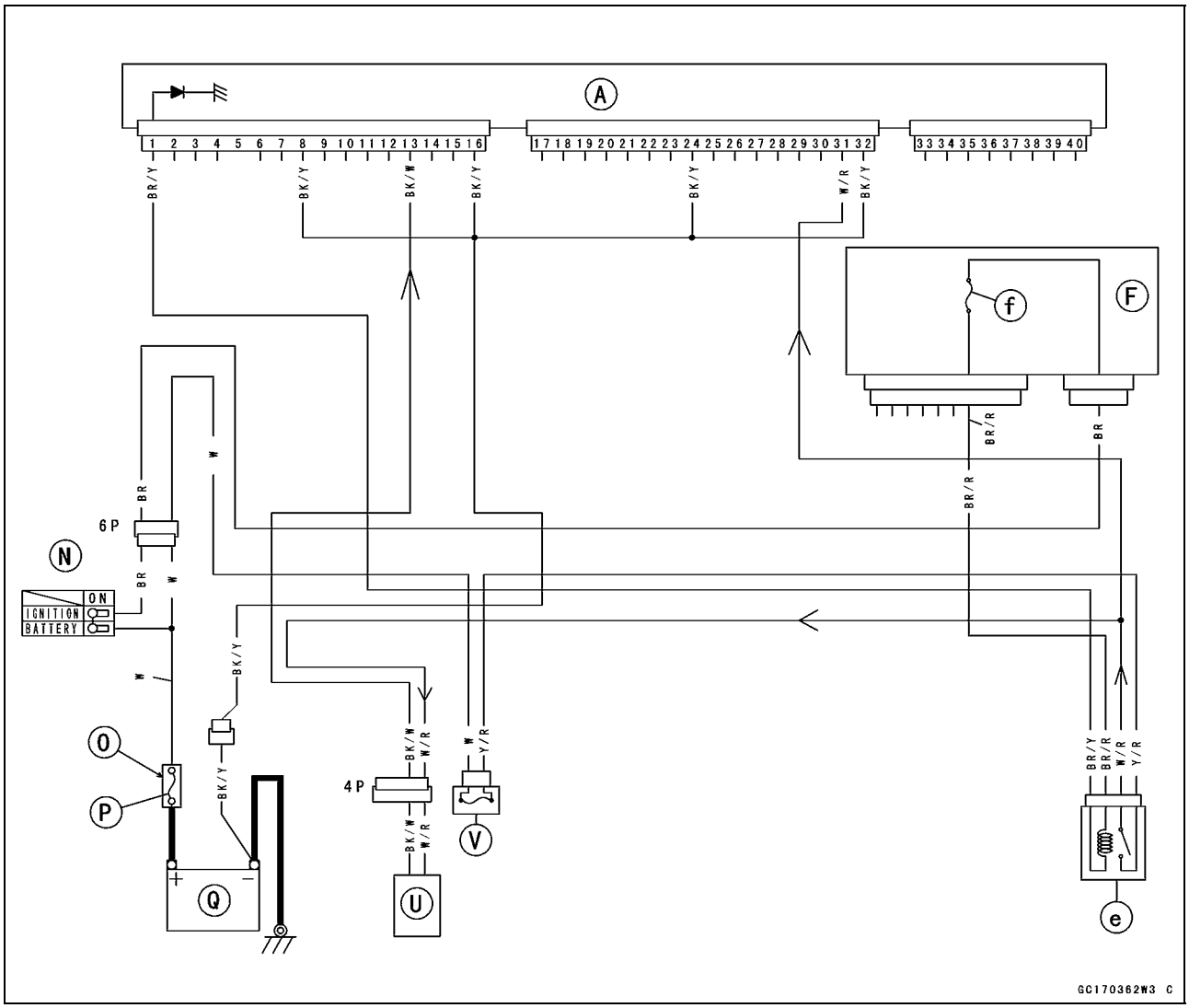

→: Signal
ECU [A]
Junction Box [F]
Ignition Switch [N]
Starter Relay [O]
Main Fuse 30 A [P]
Battery [Q]
In-tank Fuel Pump [U]
DFI Fuse 15 A [V]
DFI Main Relay [e]
Ignition Fuse 10 A [f]

Downloaded from www.vulcanriders-sweden.org

Ignition Coils (#1, #2: Fault Code 51, 52)

Ignition Coil #1: Ignition Coil for Front Cylinder (Fault Code 51)
Ignition Coil #2: Ignition Coil for Rear Cylinder (Fault Code 52)

Removal/Installation

CAUTION

Never drop the ignition coils, especially on a hard surface. Such a shock to the ignition coil can damage it.

● See Ignition System section in Electrical System chapter.

Input Voltage Inspection

NOTE

○*Be sure the battery is fully charged.*

● Turn the ignition switch OFF.
● Remove the ECU (see this chapter). Do not disconnect the ECU connector.
● Connect a digital voltmeter [A] as shown, using two needle adapters [B].
○Measure the input voltage to each primary winding of the ignition coils with the engine stopped, and with the connectors joined.
● Turn the ignition switch ON.

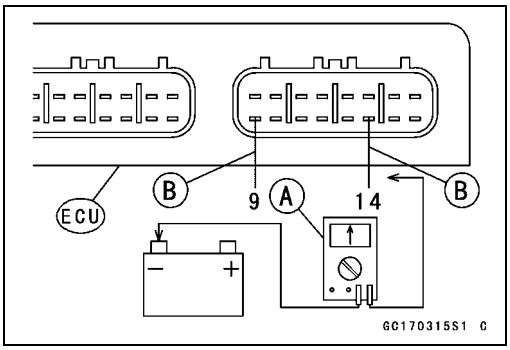

Ignition Coil Input Voltage at ECU
Connections for Ignition Coil #1
Meter (+) → BK lead (terminal 9)
Meter (–) → Battery (–) Terminal
Connections for Ignition Coil #2
Meter (+) → BK/G lead (terminal 14)
Meter (–) → Battery (–) Terminal

Input Voltage at ECU
Standard: Battery Voltage (12.5 V or more)

★If the reading is out of the standard, check the wiring (see next wiring diagram).
★If the reading is good, the input voltage is normal. Crank the engine, and check the peak voltage of the ignition coils (see Electrical System chapter) in order to check the primary coils.

Downloaded from www.vulcanriders-sweden.org

Ignition Coils (#1, #2: Fault Code 51, 52)

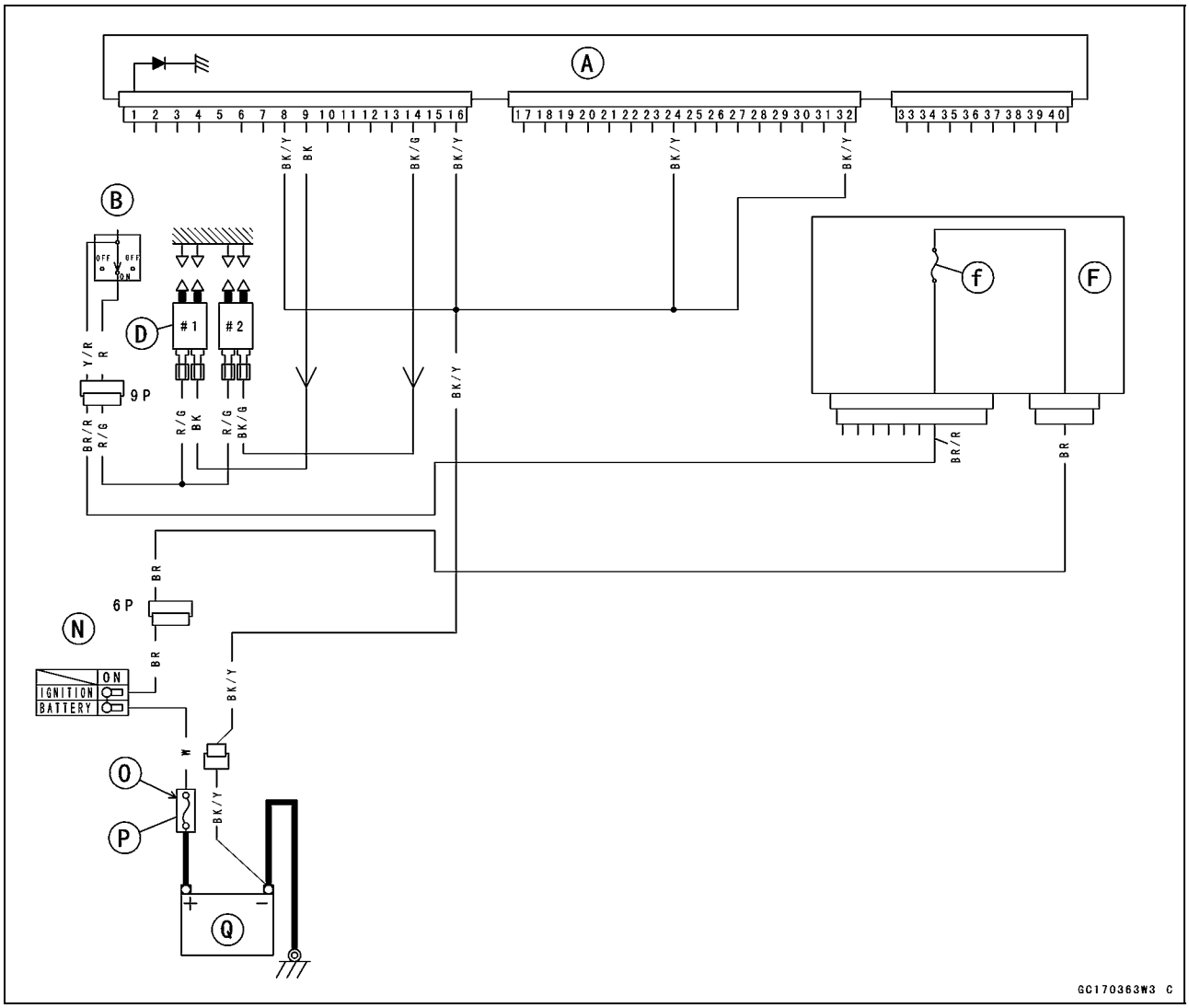

→: Signal
ECU [A]
Engine Stop Switch [B]
Ignition Coils [D]
Ignition Switch [N]
Starter Relay [O]
Main Fuse 30 A [P]
Battery [Q]
Junction Box [F]
Ignition Fuse 10 A [f]

Downloaded from www.vulcanriders-sweden.org

Downloaded from www.vulcanriders-sweden.org

Cooling System

Table of Contents

Exploded View 3-2
Coolant Flow Chart 3-4
Specifications 3-6
Coolant 3-7
  Coolant Deterioration Inspection 3-7
  Coolant Level Inspection 3-7
  Coolant Draining 3-7
  Coolant Filling 3-8
  Pressure Testing 3-10
  Cooling System Flushing 3-11
Water Pump 3-12
  Water Pump Removal 3-12
  Water Pump Installation 3-12
  Water Pump Inspection 3-13
  Mechanical Seal Replacement 3-13
Radiator 3-15
  Radiator Removal 3-15
  Radiator Installation 3-15
  Radiator Inspection 3-16
  Radiator Cap Inspection 3-16
  Radiator Filler Neck Inspection 3-17
Thermostat 3-18
  Thermostat Removal 3-18
  Thermostat Installation 3-18
  Thermostat Inspection 3-18
Hoses and Pipes 3-19
  Hose Installation 3-19
  Hose Inspection 3-19

Downloaded from www.vulcanriders-sweden.org

Exploded View

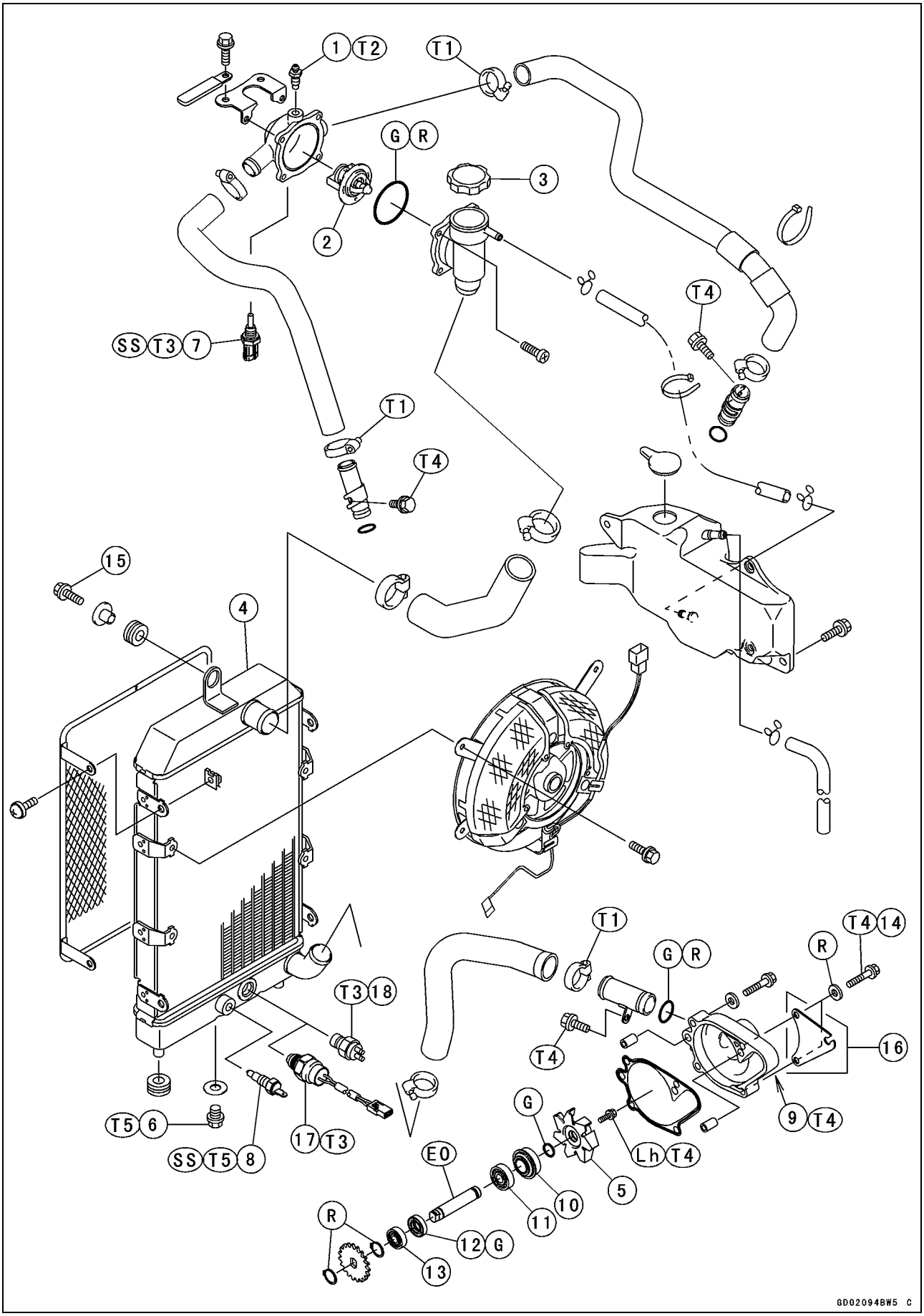

Downloaded from www.vulcanriders-sweden.org

Exploded View

1. Thermostat Air Bleeder Bolt
2. Thermostat
3. Radiator Cap
4. Radiator
5. Water Pump Impeller
6. Radiator Drain Bolt
7. Water Temperature Sensor (DFI)
8. Water Temperature Switch
9. Water Pump Drain Bolt
10. Mechanical Seal
11. Double Seal Bearing
12. Oil Seal
13. Ball Bearing
14. Water Pump Air Bleeder Bolt
15. Radiator Mounting Bolt
16. Idle Speed Adjusting Screw Bracket (before VN1500-N3)
17. Radiator Fan Switch (after VN1500-N4)
18. Radiator Fan Switch (before VN1500-N3)

T1: 2.5 N·m (0.25 kgf·m, 22 in·lb)
T2: 7.8 N·m (0.80 kgf·m, 69 in·lb)
T3: 18 N·m (1.8 kgf·m, 13 ft·lb)
T4: 9.8 N·m (1.0 kgf·m, 87 in·lb)
T5: 7.4 N·m (0.75 kgf·m, 65 in·lb)
EO: Apply engine oil.
G: Apply grease.
Lh: Left-hand Threads
R: Replacement Parts
SS: Apply silicone sealant. (Kawasaki Bond: 56019-120)

Downloaded from www.vulcanriders-sweden.org

3-4 COOLING SYSTEM

Coolant Flow Chart

Permanent type antifreeze is used as a coolant to protect the cooling system from rust and corrosion. When the engine starts, the water pump turns and the coolant circulates.

The thermostat is a wax pellet type which opens or closes as coolant temperature changes. The thermostat continuously changes its valve opening to keep the coolant temperature at the proper level. When coolant temperature is below 55°C (131°F), the thermostat closes so that the coolant flow is restricted through the air bleeder hole, causing the engine to warm up more quickly. When coolant temperature is more than 58 ~ 62°C (136 ~ 144°F), the thermostat opens and the coolant flows.

When the coolant temperature goes up beyond 102 ~ 108°C (212 ~ 226°F), the radiator fan switch conducts to operate the radiator fan. The radiator fan draws air through the radiator core when there is not sufficient air flow such as at low speeds. This increases up the cooling action of the radiator. When the temperature is below 98°C (208°F) or less, the fan switch opens and the radiator fan stops.

In this way, this system controls the engine temperature within narrow limits where the engine operates most efficiently even if the engine load varies.

The system is pressurized by the radiator cap to suppress boiling and the resultant air bubbles which can cause engine overheating. As the engine warms up, the coolant in the radiator and the water jacket expands. The excess coolant flows through the radiator cap and hose to the reserve tank to be stored there temporarily. Conversely, as the engine cools down, the coolant in the radiator and the water jacket contracts, and the stored coolant flows back to the radiator from the reserve tank.

The radiator cap has two valves. One is a pressure valve which holds the pressure in the system when the engine is running. When the pressure exceeds 93 ~ 123 kPa (0.95 ~ 1.25 kgf/cm², 13.5 ~ 17.8 psi), the pressure valve opens and releases the pressure to the reserve tank. As soon as pressure escapes, the valve closes, and keeps the pressure at 93 ~ 123 kPa (0.95 ~ 1.25 kgf/cm², 13.5 ~ 17.8 psi). When the engine cools down, another small valve (vacuum valve) in the cap opens. As the coolant cools, the coolant contracts to from a vacuum in the system. The vacuum valve opens and allows the coolant from the reserve tank to enter the radiator.

Downloaded from www.vulcanriders-sweden.org

Coolant Flow Chart

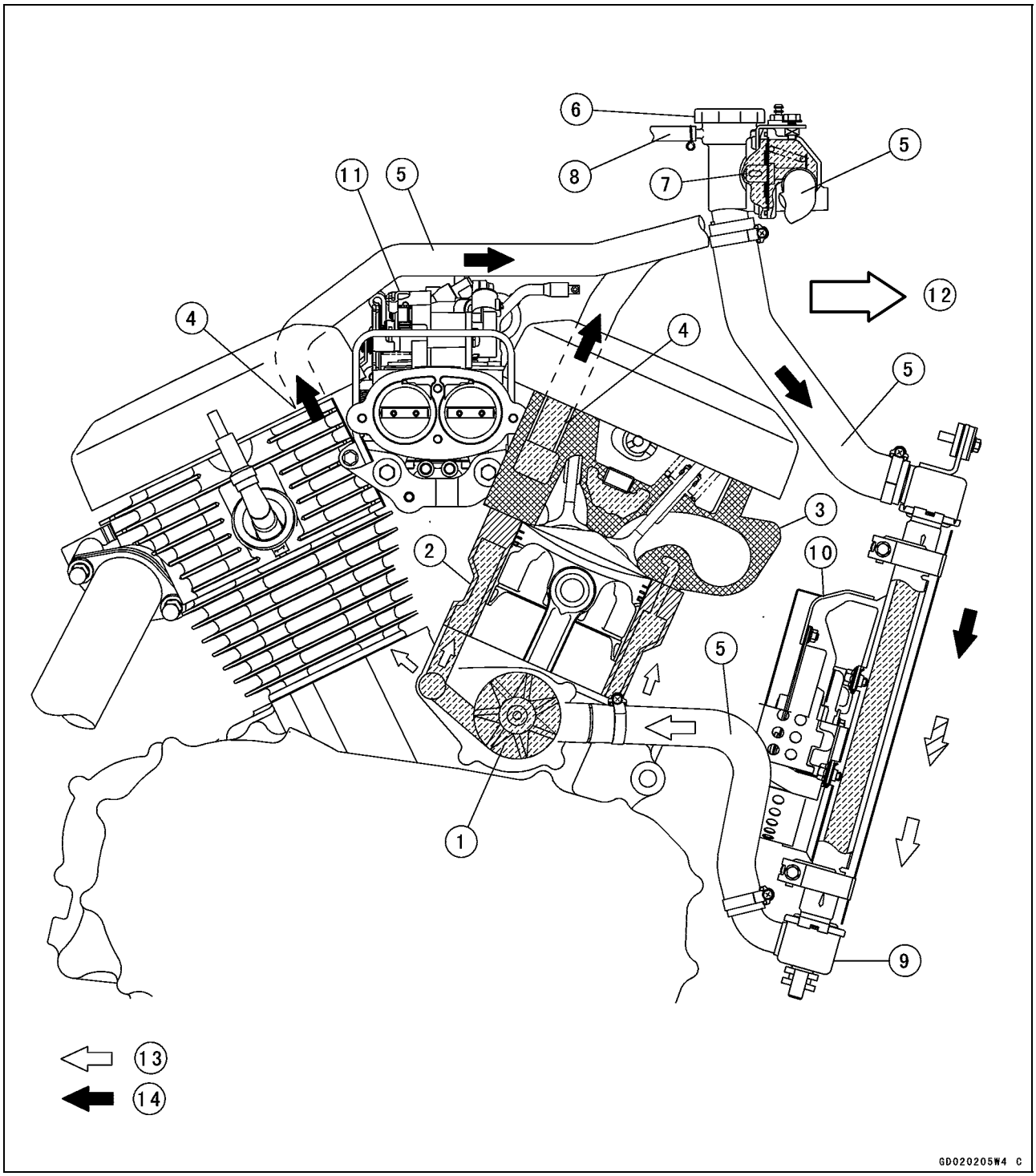

1. Water Pump
2. Water Jacket
3. Cylinder Head
4. Water Pipe
5. Water Hose
6. Radiator Cap
7. Thermostat
8. Reserve Tank Hose
9. Radiator
10. Radiator Fan
11. Throttle Assy
12. Front
13. Cold Coolant
14. Hot Coolant

Downloaded from www.vulcanriders-sweden.org

3-6 COOLING SYSTEM

Specifications

Coolant provided when shipping	
Type (recommended)	Permanent type antifreeze (soft water and ethylene glycol plus corrosion and rust inhibitor chemicals for aluminum engines and radiators)
Color	Green
Mixed Ratio	Soft water 50%, coolant 50%
Freezing Point	−35°C (−31°F)
Total Amount	2.3 L (2.43 US gt)(reserve tank full level including radiator and engine)
Radiator Cap	
Relief Pressure	93 ~ 123 kPa (0.95 ~ 1.25 kgf/cm², 13.5 ~ 17.8 psi)
Thermostat	
Valve Opening Temperature	58 ~ 62°C (136 ~ 144°F)
Valve Full Opening Lift	8 mm (0.031 in.) or more @75°C (167°F)

Special Tools - Bearing Driver Set: 57001-1129
Bearing Remover Shaft: 57001-1265
Bearing Remover Head, ϕ10 × ϕ12: 57001-1266

Sealant - Kawasaki Bond (Silicone Sealant): 56019-120

Downloaded from www.vulcanriders-sweden.org

Coolant

Coolant Deterioration Inspection



- Remove the right side cover (see Frame chapter).
- Visually inspect the coolant [A] in the reserve tank.

★If whitish cotton-like wafts are observed, aluminum parts in the cooling system are corroded. If the coolant is brown, iron or steel parts are rusting. In either case, flash the cooling system.

★If the coolant gives off an abnormal smell, check for a cooling system leak. It may be caused by exhaust gas leaking into the cooling system.

Coolant Level Inspection

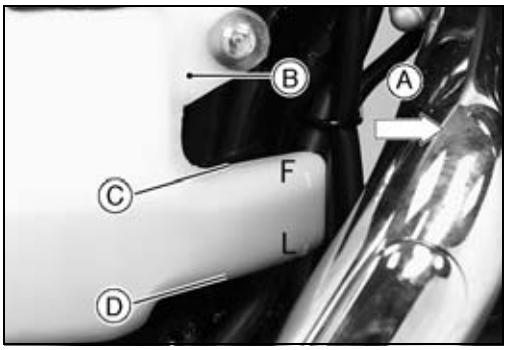

NOTE

○*Check the level when the engine is cold (room or ambient temperature).*

- Check the coolant level in the reserve tank with the motorcycle held upright. The coolant level should be between the FULL level and the LOW level (In the photo, the right side cover has been removed for clarity).
  Front [A]
  Reserve Tank [B]
  FULL Level [C]
  LOW Level [D]

★If the coolant level is lower than the LOW level, remove the right side cover and the reserve tank cap, then add coolant to the FULL level.

CAUTION

For refilling, add the specified mixture of coolant and soft water. Adding water alone dilutes the coolant and degrades its anticorrosion properties. The diluted coolant can attack the aluminum engine parts. In an emergency, soft water can be added, but the diluted coolant must be returned to the correct mixture ratio within a few days.
If coolant must be added often, or the reserve tank has run completely dry, there is probably leakage in the cooling system. Check the system for leaks.
Coolant ruins painted surfaces. Immediately wash away any coolant that spills on the frame, engine, wheels, or other painted parts.

Coolant Draining

⚠ WARNING

To avoid burns, do not remove the radiator cap or try to change the coolant when the engine is still hot. Wait until it cools down.
Coolant on tires will make them slippery, and can cause an accident and injury.
Since coolant is harmful to the human body, do not use for drinking.

Downloaded from www.vulcanriders-sweden.org

Coolant

- Place a container under the radiator drain bolt [A], then remove the drain bolt (front view).

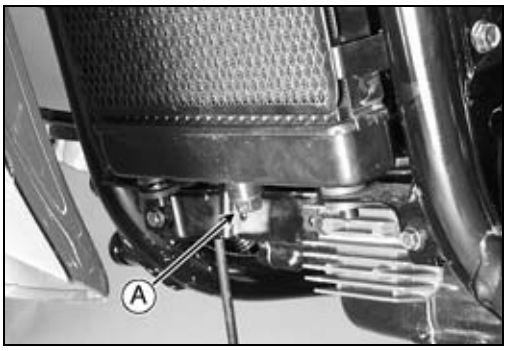

- Remove the fuel tank (see Fuel System chapter).
- Remove the radiator cap [A] in two steps. First turn the cap counterclockwise to the first stop. Then push and turn it further in the same direction and remove the cap.

○The coolant will drain from the radiator and engine.
Front [B]

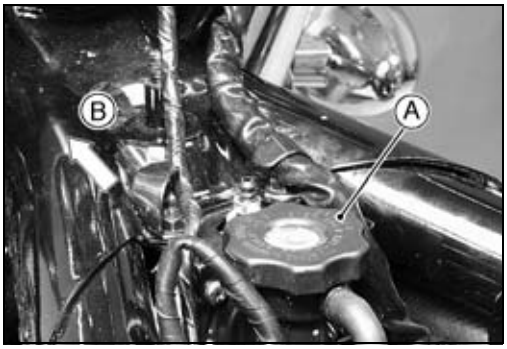

- Remove the water pump drain bolt [A]. The remaining coolant will drain from the water pump [B].

○Place a conduit under the drain hole of the pump cover. The conduit leads to a container.
Front [C]

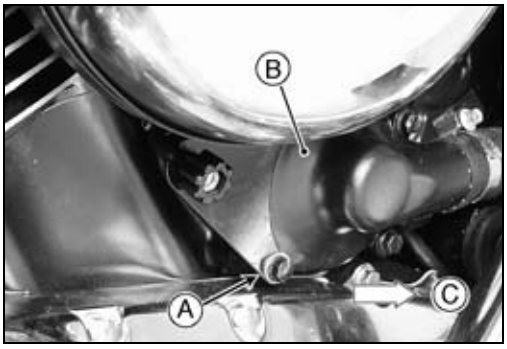

- Remove:
  Right Side Cover (see Frame chapter)
  Reserve Tank Bolts
- Turn over the reserve tank [A], remove the hose [B], and pour the coolant into a suitable container.
- Install the reserve tank.



Coolant Filling

CAUTION

Soft or distilled water must be used with the antifreeze (see Specifications in this chapter) in the cooling system.
If hard water is used in the system, it causes scale accumulation in the water passages, and considerably reduces the efficiency of the cooling system.

- Choose a suitable mixture ratio by referring to the coolant manufacturer's directions.

Downloaded from www.vulcanriders-sweden.org

Coolant

Water and Coolant Mixture Ratio (when shipping)

Soft Water	**:**	**50%**
Coolant	**:**	**50%**
Freezing Point	**:**	**− 35°C (− 31°F)**
Total Amount	**:**	**2.3 L (2.43 US gt)**

- Tighten the drain bolts.

Torque - Radiator Drain Bolt: 7.4 N·m (0.75 kgf·m, 65 in·lb)
Water Pump Drain Bolt: 9.8 N·m (1.0 kgf·m, 87 in·lb)

- Pour the coolant into the radiator.

NOTE

○*Pour in the coolant slowly so that it can expel the air from the engine and radiator.*

- Check the cooling system for leaks.
- First bleed the air from the water pump [A].

○Loosen the air bleeder bolt [B] until the coolant seeps out around the bolt, then tighten it.

Torque - Water Pump Air Bleeder Bolt: 9.8 N·m (1.0 kgf·m, 87 in·lb)

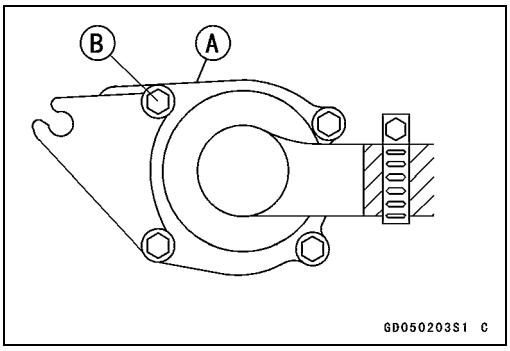

- Next, loosen the air bleeder bolt [A] on the thermostat housing.
  Front [B]
- Replenish the coolant into the radiator until the coolant begins to flow out the air bleeder bolt hole (that is, all the remaining air is forced out).
- Tap the radiator hoses to force any air bubbles caught inside.

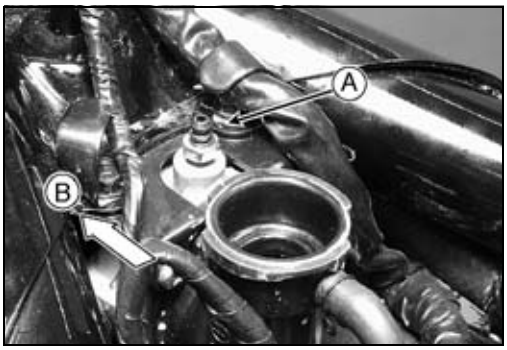

- Fill the radiator up to the filler neck [A] with coolant.
- Install the radiator cap.
- Tighten the air bleeder bolt [B].

Torque - Thermostat Air Bleeder Bolt: 7.8 N·m (0.80 kgf·m, 69 in·lb)

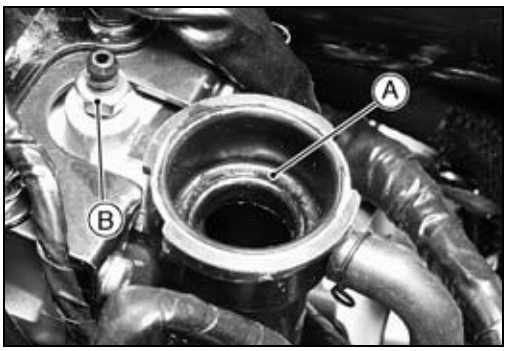

Downloaded from www.vulcanriders-sweden.org

Coolant

- Fill the reserve tank up to the “F” (full) level line [A] with coolant and install the cap.
- Install the fuel tank (see Fuel System chapter).
- Start the engine and warm it up thoroughly until the radiator fan turns on and then stop the engine.
- Check the coolant level in the reserve tank several times while the engine is cooling down, and replenish as necessary.

★If the coolant level is lower than the “L” level line, add coolant to the “F” level line.



CAUTION

Do not add more coolant above the “F” level line.

Pressure Testing

- Remove the fuel tank (see Fuel System chapter).
- Remove the radiator cap, and install a cooling system pressure tester [A] on the radiator filler neck [B].

NOTE

○*Wet the cap sealing surfaces with water or coolant to prevent pressure leakage.*

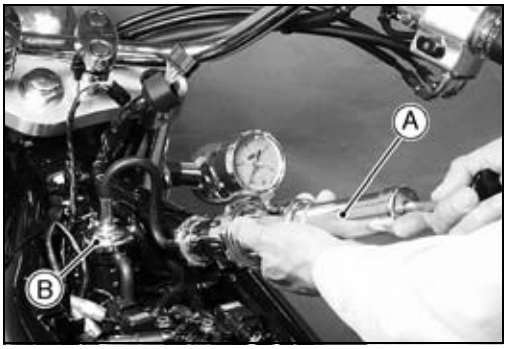

- Build up pressure in the system carefully until the pressure reaches 123 kPa (1.25 kgf/cm², 17.8 psi).

CAUTION

During pressure testing, do not exceed the pressure for which the system is designed. The maximum pressure is 123 kPa (1.25 kgf/cm², 17.8 psi).

- Watch the gauge for at least 6 seconds.

★If the pressure holds steady, the system is all right.

★If the pressure drops and no external source is found, check for internal leakage. Droplets in the engine oil indicate internal leakage. Check the cylinder head and cylinder gaskets and the water pump.

- Remove the pressure tester, replenish the coolant, and install the radiator cap.

Downloaded from www.vulcanriders-sweden.org

Coolant

Cooling System Flushing

Over a period of time, the cooling system accumulates rust, scale, and lime in the water jacket and radiator. When this accumulation is suspected or observed, flush the cooling system. If this accumulation is not removed, it will clog up the water passage and considerably reduce the efficiency of the cooling system.

- Drain the cooling system (see Coolant Draining).
- Fill the cooling system with fresh water mixed with a flushing compound.

CAUTION
Do not use a flushing compound which is harmful to the aluminum engine and radiator. Carefully follow the instructions supplied by the manufacturer of the cleaning product.

- Warm up the engine, and run it at normal operating temperature for about ten minutes.
- Stop the engine, and drain the cooling system.
- Fill the system with fresh water.
- Warm up the engine and drain the system.
- Repeat the previous two steps once more.
- Fill the system with a permanent type coolant and bleed the air from the system (see Coolant Filling).

Downloaded from www.vulcanriders-sweden.org

Water Pump

Water Pump Removal

- Drain the coolant (see Coolant Draining).
- Remove:
  Water Hose Clamp [A]
  Water Hose [B]
  Front [C]

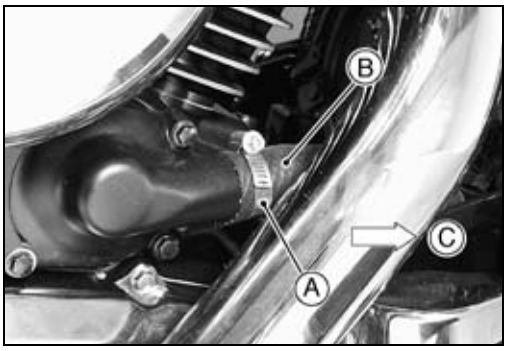

- Remove:
  Water Pump Cover Bolts [A]
  Water Pump Cover [B]

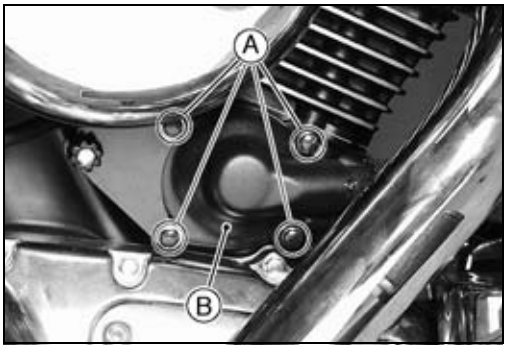

- Remove:
  Impeller Bolt [A]
  Impeller [B]

NOTE

○*The impeller bolt has left-hand threads. Turn the bolt clockwise and remove it.*

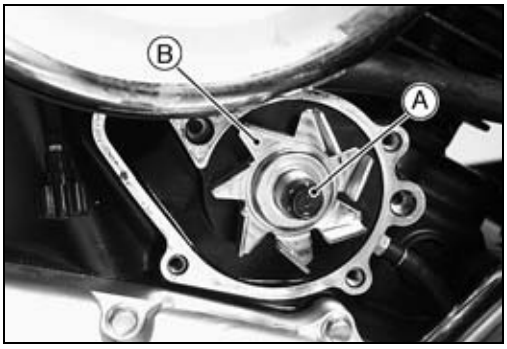

Water Pump Installation

- There are aluminum washers [A] on each side of the bracket [B] before VN1500-N3. Replace them with new ones when installing.
- Tighten:

Torque - Water Pump Cover Bolts: 9.8 N·m (1.0 kgf·m, 87 in·lb)

- Fit the idle adjusting screw [C] onto the bracket.
- Insert the pump inlet hose until the hose end [D] touches the pump inlet step [E].
- Install the clamp [F] so that the clamp end is 13 ~ 16 mm (0.51 ~ 0.63 in.) [G] apart from the pump inlet step. This prevents coolant leakage from the hose end.
- Tighten:

Torque - Water Hose Clamp Screws: 2.5 N·m (0.25 kgf·m, 22 in·lb)

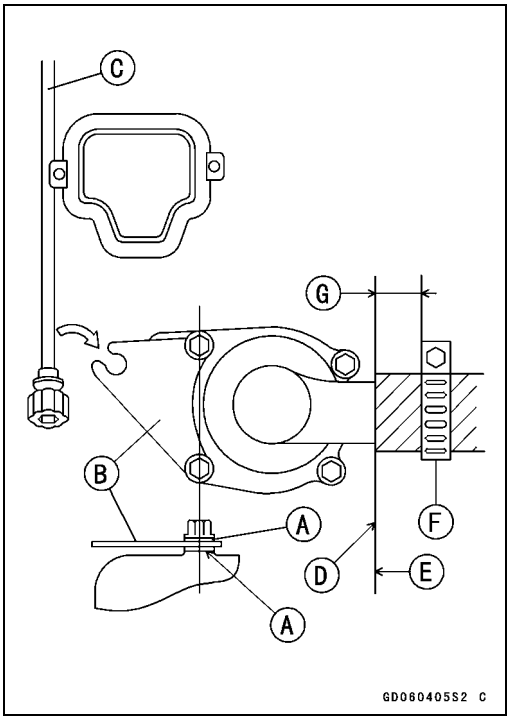

Downloaded from www.vulcanriders-sweden.org

Water Pump

Water Pump Inspection

- Check the water pump drainage outlet hose [A] at the bottom of the water pump for coolant leakage.

★If the mechanical seal is damaged, the coolant leaks through the seal and drain through the passage. Replace the mechanical seal.

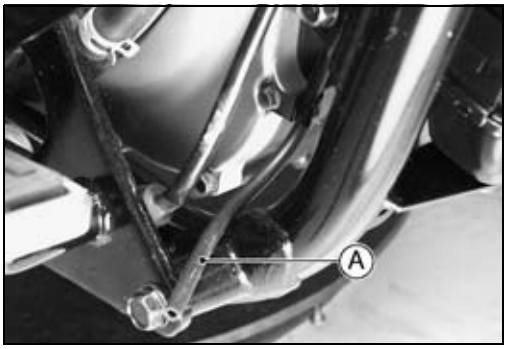

- Visually inspect the impeller [A].

★If the surface is corroded, or if the blades are damaged, replace the impeller.

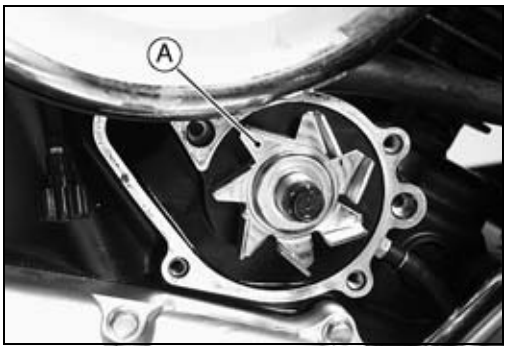

Mechanical Seal Replacement

- Remove the water pump impeller (see Water Pump Removal).
- Pry the mechanical seal flange off with a small chisel [A].
- Pull the mechanical seal out of the right crankcase with needle nose pliers. Discard the mechanical seal.



CAUTION

Be careful not to damage the water pump shaft and the inner sealing surface of the crankcase.

NOTE

○*Since the replacement mechanical seal has an adhesive coated body, do not apply a liquid gasket to the exterior surface of the body.*

- Press [A] the mechanical seal [B] by using a suitable 28 mm socket [C] and a bearing driver [D] until its flange touches the step [E].

  Gap [F]

Special Tool - Bearing Driver Set: 57001-1129

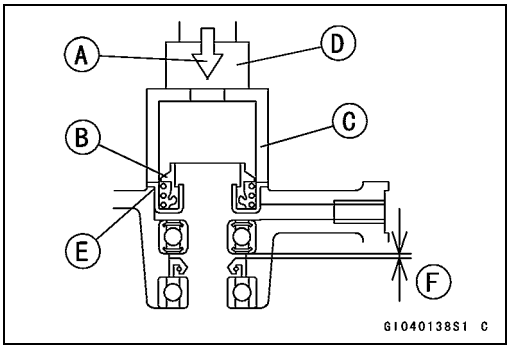

★If the coolant still leaks through the drainage outlet hose, the seal and ball bearings is probably damaged. Replace the mechanical seal, ball bearings, and oil seal by splitting the crankcase.

- Split the crankcase (see Crankshaft/Transmission chapter).
- Remove the water pump impeller.
- Pull out the water pump shaft from the inside of the right crankcase.
- Take the bearing [A] out of the right crankcase, using the bearing remover.

Special Tools - Bearing Remover Shaft: 57001-1265 [B]
Bearing Remover Head:, ϕ10 × ϕ12: 57001 -1266 [C]

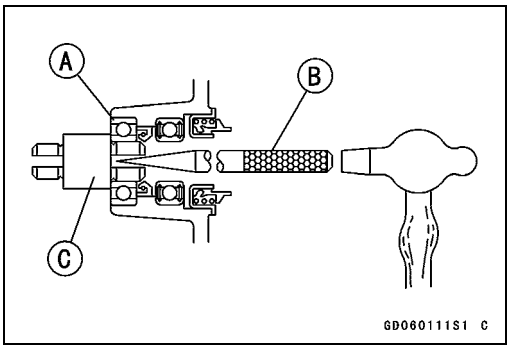

Downloaded from www.vulcanriders-sweden.org

Water Pump

- Using a thin-bladed screwdriver, pry out the oil seal.
- Press out the mechanical seal [A] and ball bearing [B] from the inside of the right crankcase with the bearing driver set [C].

Special Tool - Bearing Driver Set: 57001-1129

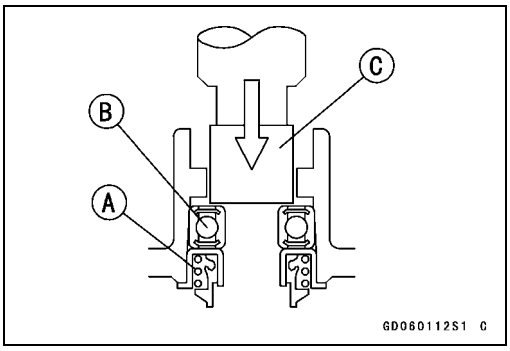

○Be sure to replace the mechanical seal, oil seal, O-ring, and ball bearings with new ones because these parts will be damaged by removal.
- Apply plenty of high temperature grease to the oil seal lips.
- Apply oil to the outer circumference of the oil seal.
- Press the oil seal [A] into the hole from the inside of the right crankcase with the bearing driver set so that the spring side of the seal lips is toward the inside of the crankcase.

Special Tool - Bearing Driver Set: 57001-1129

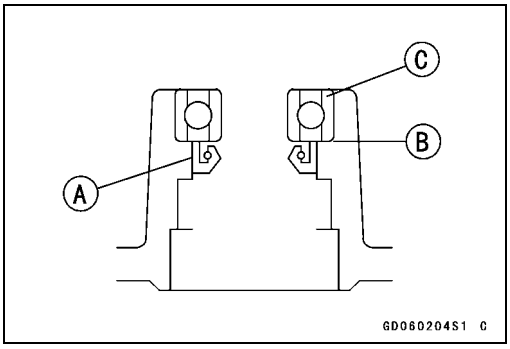

- Press the oil seal in until the seal end is even with step [B] of the hole as shown.

○Use the bearing driver which has a larger diameter than the oil seal.
- Press in each ball bearing [C] with its manufacturer's mark facing out until it bottoms out.

- Press [A] the mechanical seal [B] by using a suitable 28 mm socket [C] and a bearing driver [D] until its flange touches the step [E].
  Gap [F]
- Install the water pump shaft from the inside of the right crankcase.

Special Tool - Bearing Driver Set: 57001-1129

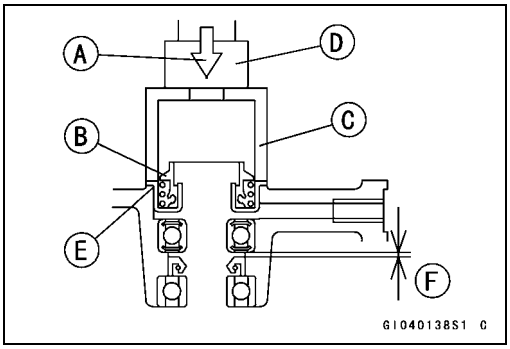

- Clean both sliding surfaces of a new mechanical seal with a high-flash point solvent (e.g. ethyl alcohol), and apply a little coolant to the sliding surface to give the mechanical seal initial lubrication.
- Apply coolant to the surface of the rubber seal [A] and sealing seat [B], and press the rubber seal and sealing seat into the impeller by hand until the seat bottoms out.
- Tighten the water pump impeller bolt by turning the bolt counterclockwise.

Torque - Water Pump Impeller Bolt: 9.8 N·m (1.0 kgf·m, 87 in·lb)

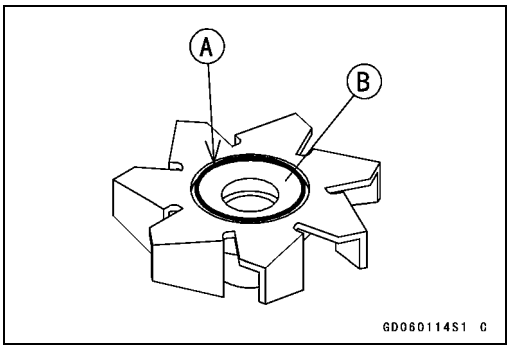

Downloaded from www.vulcanriders-sweden.org

Radiator

⚠ WARNING

The radiator fan is connected directly to the battery. The radiator fan may start even if the ignition switch is off. NEVER TOUCH THE RADIATOR FAN UNTIL THE RADIATOR FAN CONNECTOR IS DISCONNECTED. TOUCHING THE FAN BEFORE THE CONNECTOR IS DISCONNECTED COULD CAUSE INJURY FROM THE FAN BLADES.

Radiator Removal

- Drain the coolant (see Coolant Draining).
- Remove:
  Fuel Tank (see Fuel System chapter)
  Radiator Fan Motor Connector [A]
  Water Hoses
  Front [B]

○For reference only
  Rear Brake Light Switch Connector [C]

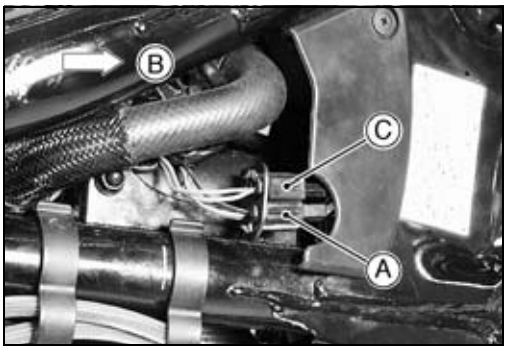

- Remove the mounting bolt [A].
- Lift up the radiator to clear the stoppers.
- Remove the radiator.

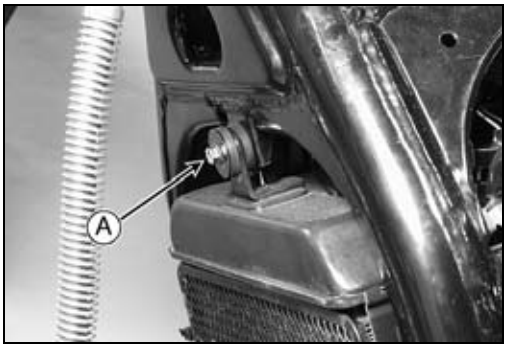

CAUTION

Do not touch the radiator core. This could damage the radiator fins, resulting in loss of cooling efficiency.

- Remove:
  Radiator Fan Bolts [A]
  Radiator Fan [B]

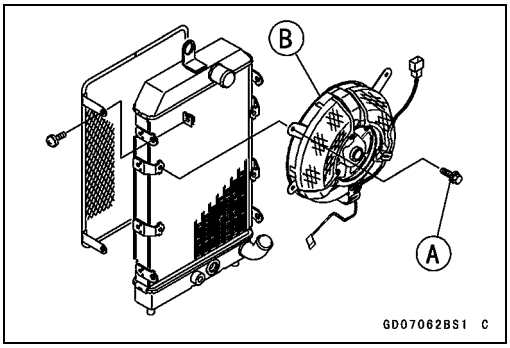

Radiator Installation

- Be sure to install the radiator fan ground lead terminal [A].
- Install the pump inlet hose and position the hose clamp (see Water Pump Installation).
- Tighten:

Torque - Water Hose Clamp Screws: 2.5 N·m (0.25 kgf·m, 22 in· lb)

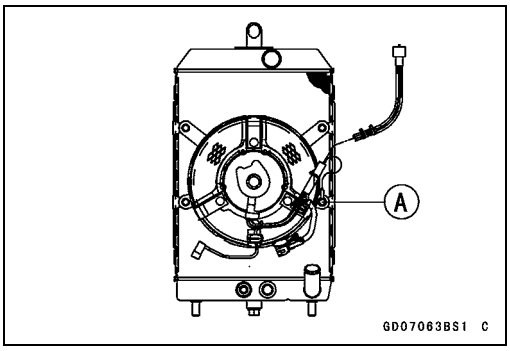

Downloaded from www.vulcanriders-sweden.org

Radiator

Radiator Inspection

- Check the radiator core.

★If there are obstructions to air flow, remove them.

★If the corrugated fins [A] are deformed, carefully straighten them.

★If the air passages of the radiator core are blocked more than **20%** by unremovable obstructions or irreparably deformed fins, replace the radiator with a new one.

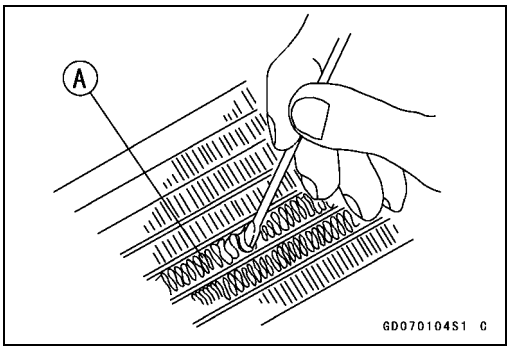

CAUTION

When cleaning the radiator with steam cleaner, be careful of the following to prevent radiator damage.
Keep the steam gun [A] away more than 0.5 m [B] from the radiator core.
Hold the steam gun perpendicular [C] to the core surface.
Run the steam gun following the core fin direction.

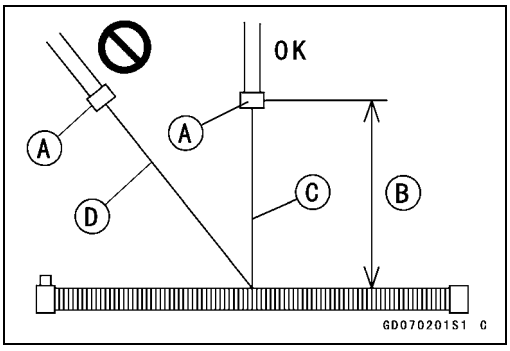

Oblique [D]

Radiator Cap Inspection

- Check the condition of the top and bottom valve seals of the radiator cap.

★If any one of them shows visible damage, replace the cap.

Bottom Valve Seal [A]
Top Valve Seal [B]
Valve Spring [C]

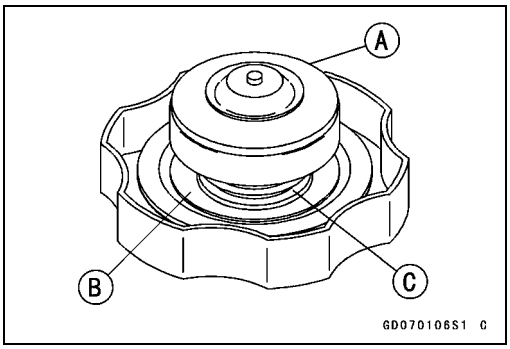

- Install the cap [A] on a cooling system pressure tester [B].

NOTE

○*Wet the cap sealing surfaces with water or coolant to prevent pressure leakage.*

- Watching the pressure gauge, pump the pressure tester to build up the pressure until the relief valve opens: the gauge needle flicks downward. Stop pumping and measure leak time at once. The relief valve must open within the specified range in the table below and the gauge needle must remain within the same range at least 6 seconds.

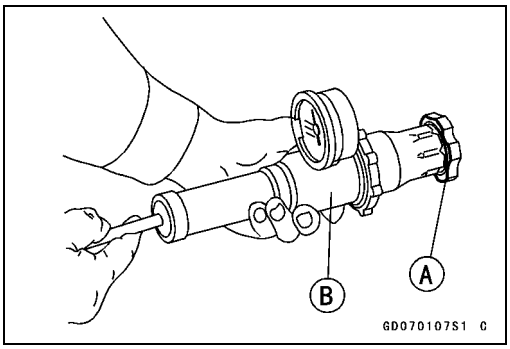

Radiator Cap Relief Pressure

Standard: 93 ~ 123 kPa (0.95 ~ 1.25 kgf/cm², 13.5 ~ 17.8 psi) for 6 seconds

★If the cap holds too much pressure or cannot hold the specified pressure, replace it with a new one.

Downloaded from www.vulcanriders-sweden.org

Radiator

Radiator Filler Neck Inspection

- Remove the radiator cap.
- Check the radiator filler neck for signs of damage.
- Check the condition of the top and bottom sealing seats [A] in the filler neck. They must be smooth and clean for the radiator cap to function properly.
  Front [B]

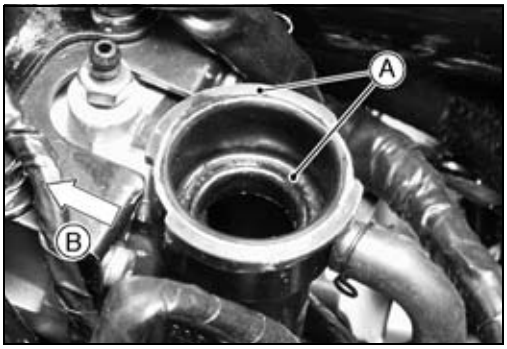

Downloaded from www.vulcanriders-sweden.org

Thermostat

Thermostat Removal

- Remove:
  Coolant: Drain about 200 mL
  Fuel Tank (see Fuel System chapter)
  Four Water Hoses [A]
  Bracket Bolts [B]
  Water Temperature Sensor Connector
- Remove the thermostat housing [C] along with the bracket.
  Front [D]

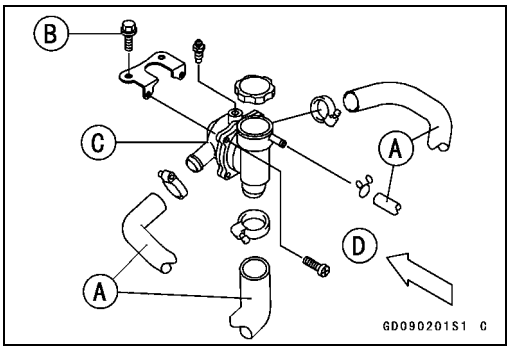

- Remove the screws [A], take off the cap [B], and take out the thermostat.

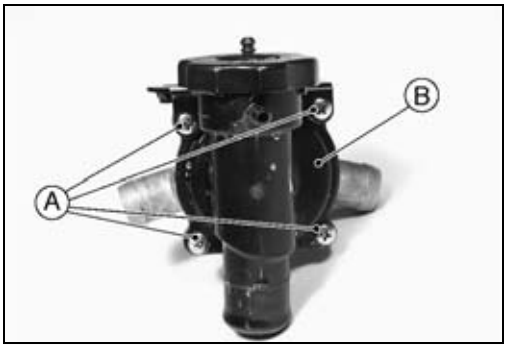

Thermostat Installation

- Install the thermostat [A] in the housing so that the air bleeder hole [B] is on top.
- Install a new O-ring into the housing.
- Fill the radiator with coolant (see Coolant Filling).

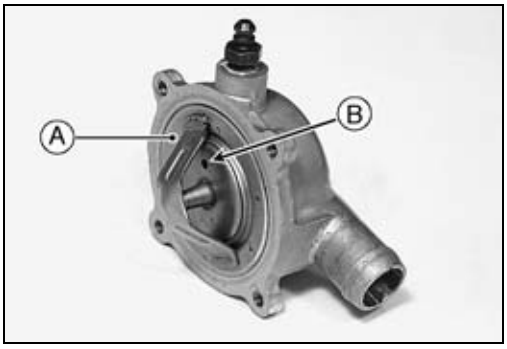

Thermostat Inspection

- Remove the thermostat, and inspect the thermostat valve at room temperature.

★If the valve is open, replace the valve with a new one.

- To check valve opening temperature, suspend the thermostat [A] and an accurate thermometer [B] in a container of water with the heat-sensitive portions [C] in almost the same depth.

NOTE

○*The thermostat must be completely submerged and the thermostat and thermometer must not touch the container sides or bottom.*

- Gradually raise the temperature of the water while stirring the water gently for even temperature.

★If the measurement is out of the range, replace the thermostat.

Thermostat Valve Opening Temperature
Standard: 58 ~ 62°C (136 ~ 144°F)

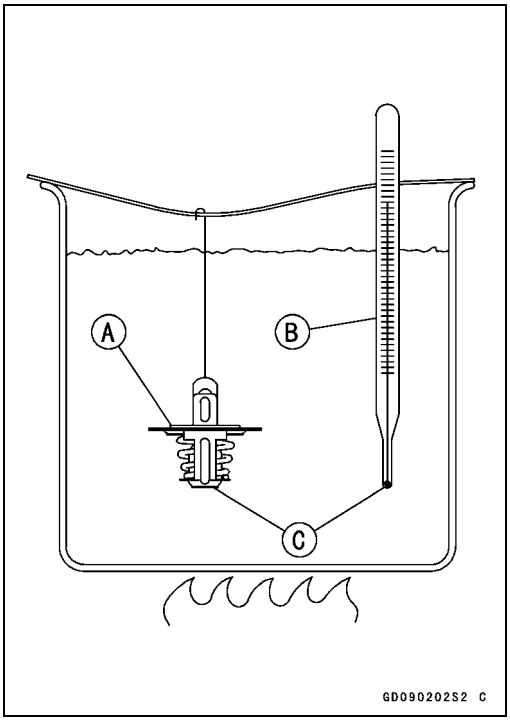

Downloaded from www.vulcanriders-sweden.org

Hoses and Pipes

- Whenever the water hoses are removed or in accordance with the Periodic Maintenance Chart, check the water hoses and their connections.

Hose Installation

- Install the hoses and pipes being careful to follow bending direction. Avoid sharp bending, kinking, flattening, or twisting.
- Install the clamps [A] as near as possible to the hose end to clear the raised rib on the fitting. This will prevent the hoses from working loose.

○The clamp screws should be positioned correctly to prevent the clamps from contacting the other parts.

Torque - Water Hose Clamp Screws: 2.5 N·m (0.25 kgf·m, 22 in·lb)

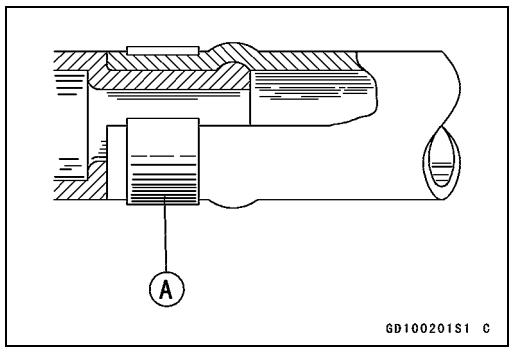

Hose Inspection

- Visually inspect the hoses for signs of deterioration. Squeeze the hoses. A hose should not be hard and brittle, nor should it be soft or swollen.
- Replace any damaged hoses.

Downloaded from www.vulcanriders-sweden.org

Downloaded from www.vulcanriders-sweden.org

Engine Top End

Table of Contents

Exploded View 4-2
Exhaust System Identification 4-5
Specifications 4-6
Clean Air System 4-9
  Air Suction Valve Removal 4-9
  Air Suction Valve Installation 4-9
  Air Suction Valve Inspection (Periodic Inspection) 4-9
  Vacuum Switch Valve Removal ... 4-10
  Vacuum Switch Valve Installation 4-10
  Vacuum Switch Valve Operation Test 4-10
  Vacuum Switch Valve Unit Test 4-10
  Clean Air System Hose Inspection 4-11
Camshaft Chain Tensioner 4-12
  Removal 4-12
  Installation 4-12
Rocker Case Cover 4-14
  Removal 4-14
  Installation 4-14
  Assembly 4-14
Rocker Case 4-15
  Removal 4-15
  Installation 4-15
  Rocker Arm Assembly 4-17
HLA (Hydraulic Lash Adjuster) 4-18
  HLA Removal 4-18
  HLA Air Bleeding 4-18
  HLA Installation 4-18
  Inspection 4-18
Camshafts 4-19
  Removal 4-19
  Installation 4-19
  Camshaft Sprocket Installation 4-22
  Camshaft/Rocker Case Wear Inspection 4-22
  Front Camshaft Chain Removal ... 4-23
  Rear Camshaft Chain Removal ... 4-23
KACR (Kawasaki Automatic Compression Release) 4-24
  Removal 4-24
  Installation 4-24
  Inspection 4-24
Cylinder Head 4-26
  Cylinder Compression Measurement 4-26
  Removal 4-27
  Installation 4-28
Valves 4-29
  Valve Clearance Adjustment 4-29
  Valve Removal 4-29
  Valve Installation 4-29
  Valve Guide Removal 4-29
  Valve Guide Installation 4-30
  Valve-to-Guide Clearance Measurement 4-30
  Valve Seat Inspection 4-31
  Valve Seat Repair 4-31
Cylinders, Piston 4-36
  Cylinder Removal 4-36
  Piston Removal 4-36
  Cylinder, Piston Installation 4-36
  Cylinder Wear Inspection 4-38
  Piston Wear Inspection 4-39
  Piston/Cylinder Clearance Inspection 4-39
  Cylinder Boring and Honing 4-39
  Piston Ring, Piston Ring Groove Wear Inspection 4-40
  Piston Ring Groove Width Inspection 4-40
  Piston Ring Thickness Inspection 4-40
  Piston Ring End Gap Inspection .. 4-41
Mufflers 4-42
  Exhaust Pipe Removal 4-42
  Lower Muffler Body Removal 4-43
  Upper Muffler Body Removal 4-43
  Muffler, Exhaust Pipe Installation . 4-43
  Chamber Removal 4-44
  Chamber Installation 4-44
  Chamber Assembly 4-44
  Chamber Identification 4-44

Downloaded from www.vulcanriders-sweden.org

4-2 ENGINE TOP END

Exploded View

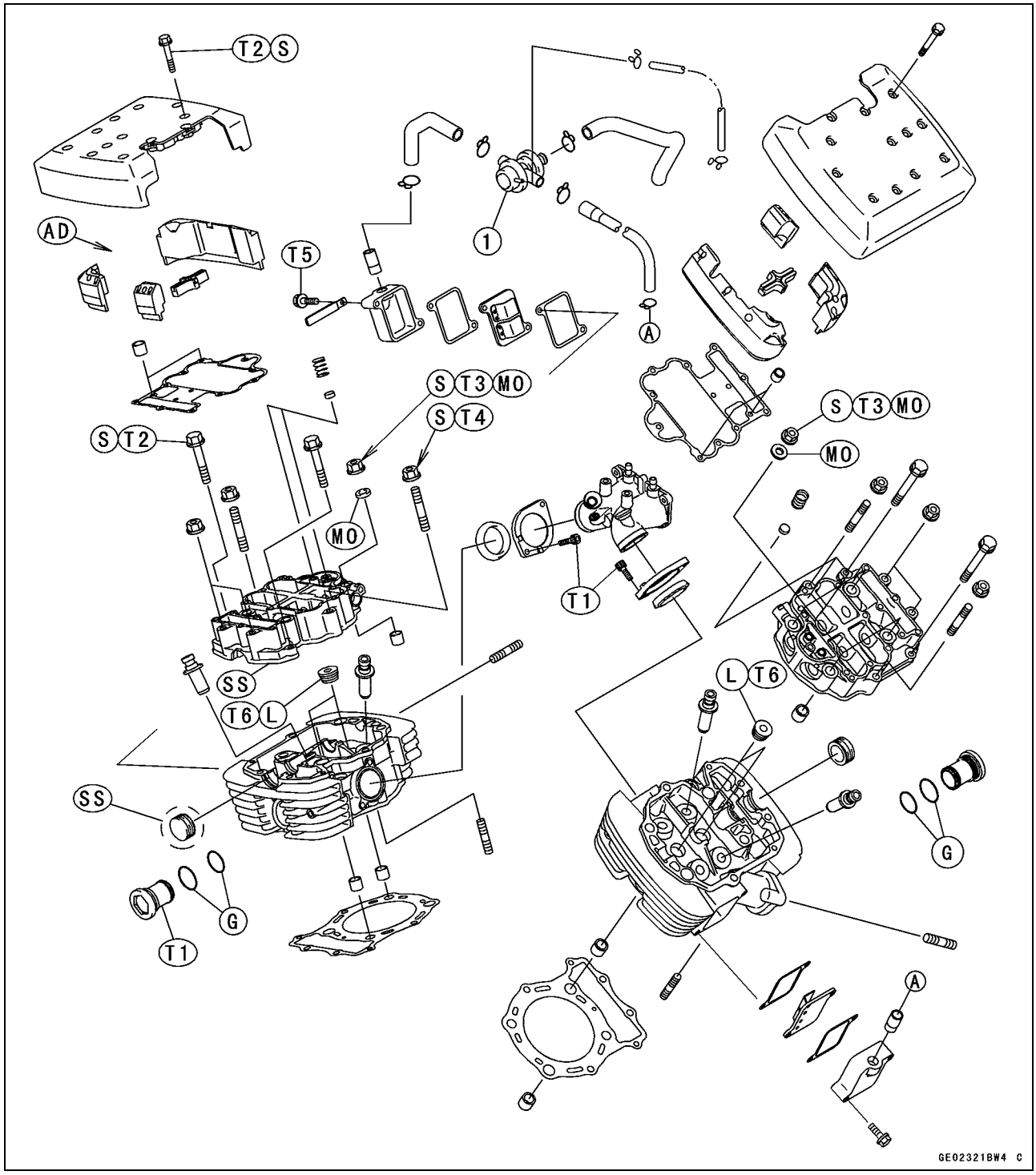

1. Vacuum Switch Valve
T1: 12 N·m (1.2 kgf·m, 104 in·lb)
T2: 8.8 N·m (0.90 kgf·m, 78 in·lb)
T3: ϕ12 mm, 78 N·m (8.0 kgf·m, 58 ft·lb)
T4: ϕ8 mm, 25 N·m (2.5 kgf·m, 18.0 ft·lb)
T5: 7.4 N·m (0.75 kgf·m, 65 in·lb)
T6: 20 N·m (2.0 kgf·m, 14 ft·lb)
AD: Apply adhesive.
G: Apply grease.
L: Apply a non-permanent locking agent.
MO: Apply molybdenum disulfide oil.
The molybdenum disulfide oil is a mixture of engine oil and molybdenum disulfide grease with a weight ratio (10 : 1)
S: Follow the specific tightening sequence.
SS: Apply silicone sealant (Kawasaki Bond: 56019-120).

Downloaded from www.vulcanriders-sweden.org

Exploded View

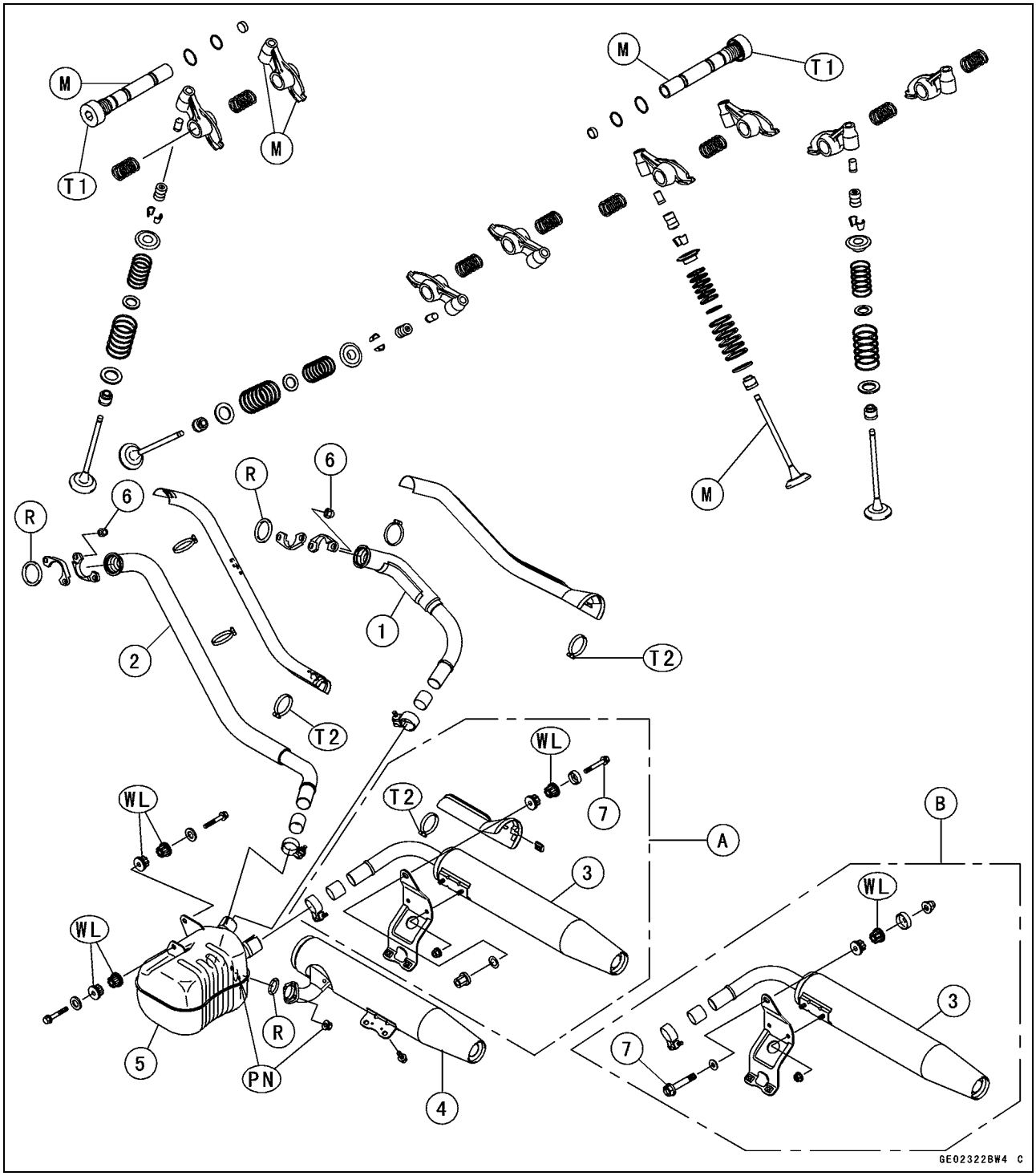

1. Rear Exhaust Pipe
2. Front Exhaust Pipe
3. Upper Muffler
4. Lower Muffler
5. Premuffler Chamber
6. Exhaust Pipe Holder Nuts
7. Muffler Mounting Bolts and Nuts

T1: 25 N·m (2.5 kgf·m, 18 ft·lb)

A. VN1500-N1 ~ N3 Model
B. VN1500-N4 Model ~

T2: 6.9 N·m (0.70 kgf·m, 61 in·lb)
M: Apply molybdenum disulfide grease.
PN: Spray a penetrating oil on the nuts and studs if the nuts are difficult to remove.
R: Replacement Parts
WL: Apply a soap and water solution or rubber lubricant.

Downloaded from www.vulcanriders-sweden.org

Exploded View

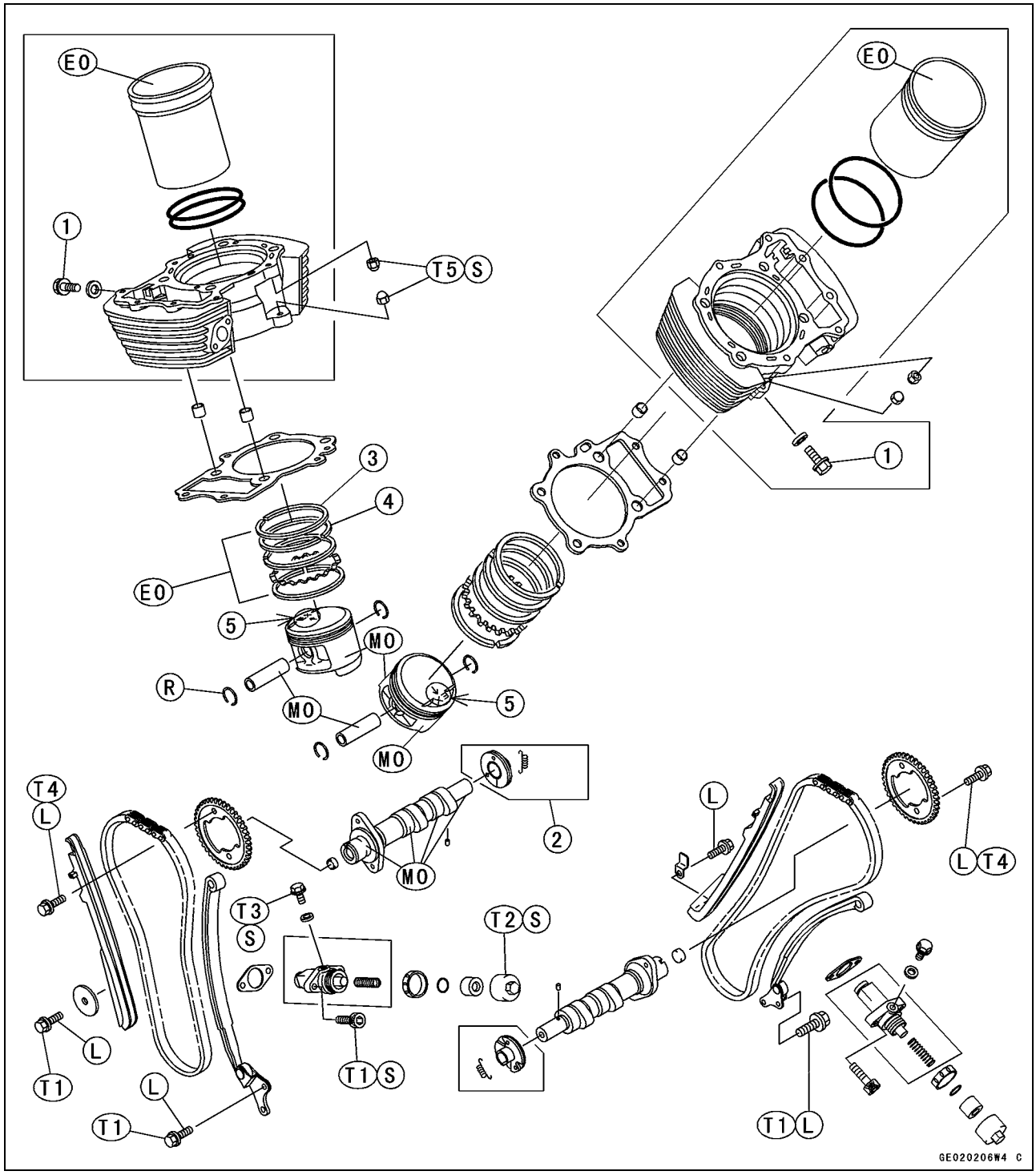

1. Coolant Drain Bolts
2. KACR Unit
3. “R” marked side faces up.
4. “RN” marked side faces up.
5. Each "EX" mark points to the exhaust side.

T1: 9.8 N·m (1.0 kgf·m, 87 in·lb)
T2: 20 N·m (2.0 kgf·m, 14 ft·lb)
T3: 4.9 N·m (0.50 kgf·m, 43 in·lb)
T4: 15 N·m (1.5 kgf·m, 11 ft·lb)
T5: 25 N·m (2.5 kgf·m, 18 ft·lb)
EO: Apply engine oil.
L: Apply a non-permanent locking agent.
MO: Apply molybdenum disulfide oil. The molybdenum disulfide oil is a mixture of engine oil and molybdenum disulfide grease with a weight ratio (10 : 1)
R: Replacement Parts
S: Follow the specific tightening sequence.

Downloaded from www.vulcanriders-sweden.org

Exhaust System Identification

Exhaust System

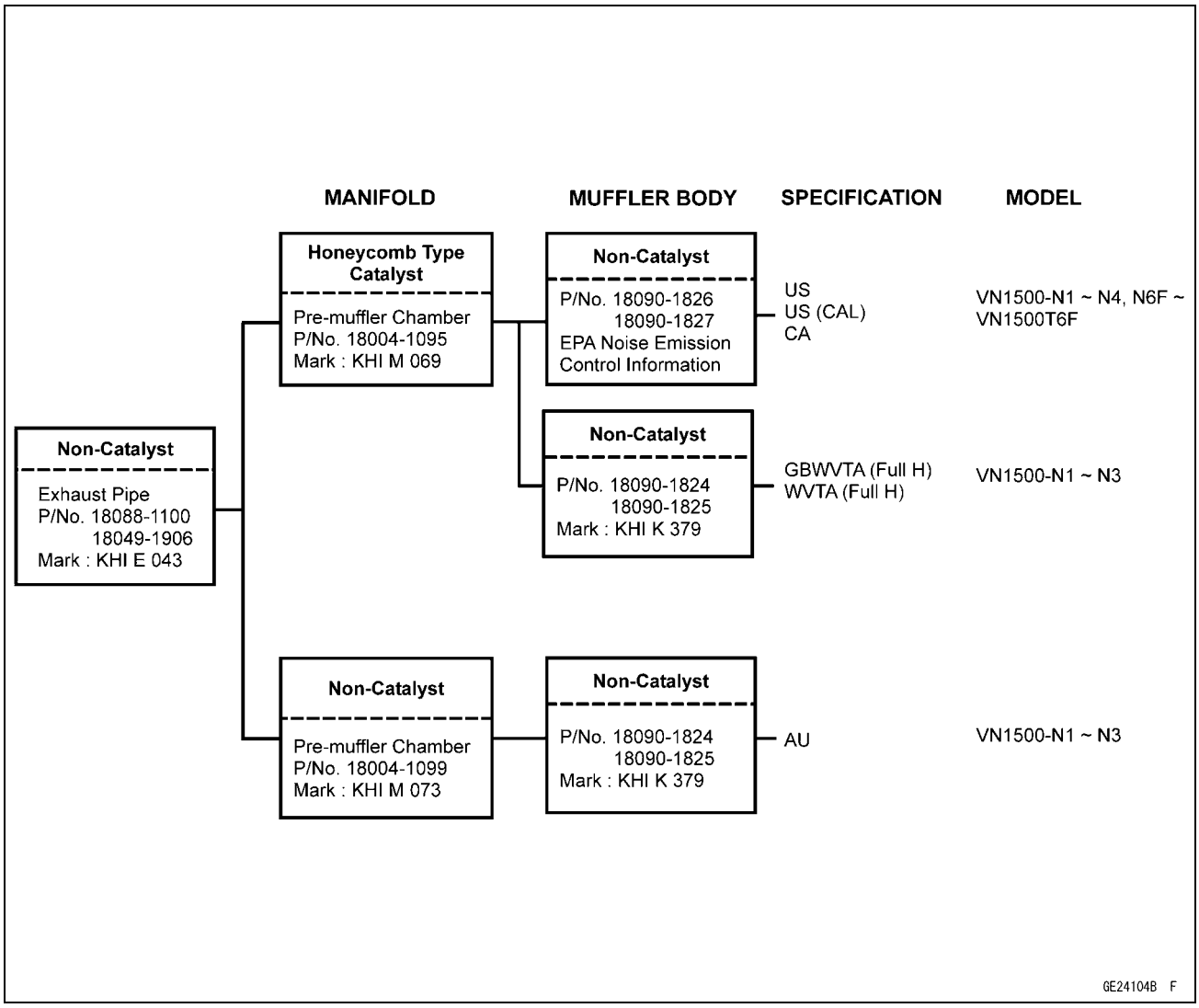

US: United States
US (CAL): United States (California)
CA: Canada
AU: Australia
GB WVTA (Full H): WVTA Model with Honeycomb Catalytic Converter (Full Power)
WVTA (Full H): WVTA Model with Honeycomb Catalytic Converter (Left Side, Full Power)

Mark and/or Catalyst Position

Exhaust Pipe [A]

Pre-Muffler Chamber [B]
[C] Catalyst

Muffler Body
[D] Emission Control Information (US, CA)
[E] GB WVTA (Full H), WVTA (Full H)

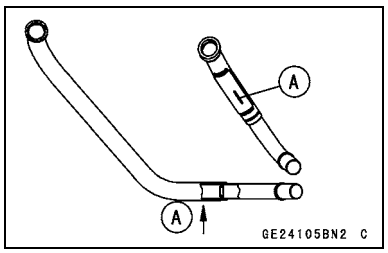

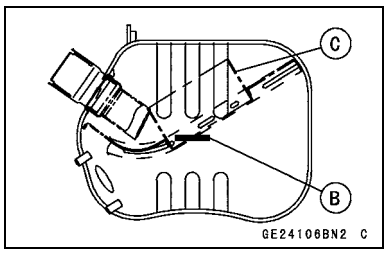

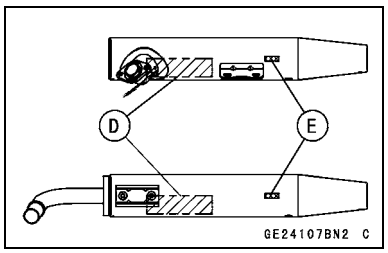

Downloaded from www.vulcanriders-sweden.org

Specifications

Item	Standard	Service Limit
Clean Air System		
Vacuum Switch Valve Closing Pressure:	Open → Close 49.3 ~ 57.3 kPa (370 ~ 430 mm Hg)	– – –
Camshafts		
Cam Height:		
Exhaust	33.48 ~ 33.60 mm (1.318 ~ 1.323 in.)	33.38 mm (1.314 in.)
Inlet	33.80 ~ 33.92 mm (1.331 ~ 1.335 in.)	33.70 mm (1.327 in.)
Camshaft, Camshaft Cap Clearance:		
ϕ25	0.020 ~ 0.062 mm (0.0008 ~ 0.0024 in.)	0.15 mm (0.0059 in.)
ϕ17	0.016 ~ 0.055 mm (0.0006 ~ 0.0022 in.)	0.14 mm (0.0055 in.)
Camshaft Journal Diameter:		
ϕ25	24.959 ~ 24.980 mm (0.9826 ~ 0.9835 in.)	24.93 mm (0.9815 in.)
ϕ17	16.966 ~ 16.984 mm (0.6680 ~ 0.6687 in.)	16.93 mm (0.6665 in.)
Rocker Case Bearing Inside Diameter:		
ϕ25	25.000 ~ 25.021 mm (0.9843 ~ 0.9851 in.)	25.08 mm (0.9874 in.)
ϕ17	17.000 ~ 17.021 mm (0.6693 ~ 0.6701 in.)	17.08 mm (0.6724 in.)
Camshaft Runout	TIR 0.02 mm (0.0008 in.) or less	TIR 0.1 mm (0.004 in.)
Rocker Arm Inside Diameter	16.000 ~ 16.018 mm (0.6299 ~ 0.6306 in.)	16.05 mm (0.6319 in.)
Rocker Shaft Diameter	15.966 ~ 15.984 mm (0.6286 ~ 0.6293 in.)	15.94 mm (0.6276 in.)
Cylinder Head		
Cylinder Compression Usable Range	340 ~ 590 kPa (3.5 ~ 6 kgf/cm², 50 ~ 85 psi) @300 r/min (rpm) with electric starter	– – –
Cylinder Head Warp	– – –	0.05 mm (0.0020 in.)
Valve		
Valve Clearance	Non-adjustable (Auto adjuster)	– – –
Valve Head Thickness:		
Exhaust	0.9 ~ 1.1 mm (0.0354 ~ 0.0433 in.)	0.7 mm (0.0276 in.)
Inlet	0.9 ~ 1.1 mm (0.0354 ~ 0.0433 in.)	0.5 mm (0.0197 in.)
Valve Stem Bend	TIR 0.01 mm (0.0004 in.) or less	TIR 0.05 mm (0.0020 in.)
Valve Stem Diameter:		
Exhaust	6.955 ~ 6.970 mm (0.2738 ~ 0.2744 in.)	6.94 mm (0.2732 in.)
Inlet	6.965 ~ 6.980 mm (0.2742 ~ 0.2748 in.)	6.95 mm (0.2736 in.)

Downloaded from www.vulcanriders-sweden.org

Specifications

Item	Standard	Service Limit
Valve Guide Inside Diameter:		
Exhaust	7.000 ~ 7.015 mm (0.2756 ~ 0.2762 in.)	7.08 mm (0.2787 in.)
Inlet	7.000 ~ 7.015 mm (0.2756 ~ 0.2762 in.)	7.08 mm (0.2787 in.)
Valve/valve Guide Clearance (Wobble Method):		
Exhaust	0.08 ~ 0.16 mm (0.0031 ~ 0.0063 in.)	0.30 mm (0.0118 in.)
Inlet	0.05 ~ 0.13 mm (0.0020 ~ 0.0051 in.)	0.27 mm (0.0106 in.)

Cam Height

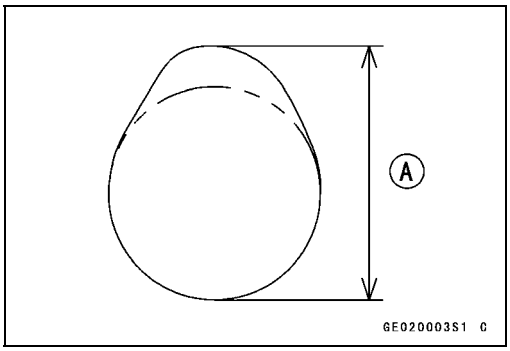

Cam Height (maximum) [A]

Camshaft Journals and Runout

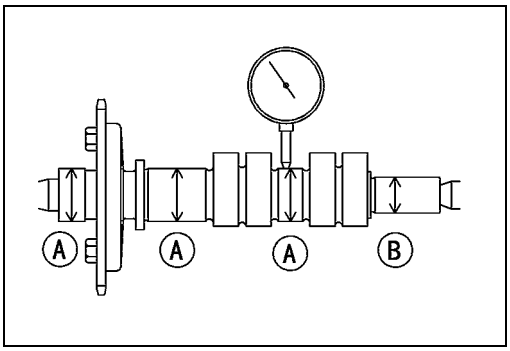

ϕ25 mm (0.98 in.) [A]
ϕ17 mm (0.67 in.) [B]

Item	Standard	Service Limit
Valve Seat Surface:		
Valve Seat Cutting Angle	45°, 32°, 55°	– – –
Outside Diameter:		
Exhaust	28.9 ~ 29.1 mm (1.1378 ~ 1.1457 in.)	– – –
Inlet	31.9 ~ 32.1 mm (1.2559 ~ 1.2638 in.)	– – –
Width:		
Exhaust	0.5 ~ 1.0 mm (0.02 ~ 0.04 in.)	– – –
Inlet	0.5 ~ 1.0 mm (0.02 ~ 0.04 in.)	– – –
Valve Spring Free Length:		
Outer (EX, IN)	44.76 mm (1.762 in.) (painted orange)	43.2 mm (1.701 in.)
Inner (EX, IN)	39.82 mm (1.568 in.) (painted orange)	38.3 mm (1.508 in.)
Cylinder, Piston		
Cylinder Inside Diameter	102.000 ~ 102.012 mm (4.0157 ~ 4.0162 in.)	102.10 mm (4.020 in.)
Piston Diameter	101.942 ~ 101.957 mm (4.0135 ~ 4.0140 in.)	101.79 mm (4.007 in.)
Piston/cylinder Clearance	0.043 ~ 0.070 mm (0.0017 ~ 0.0028 in.)	– – –
Oversize Piston and Rings	+0.5 mm (0.02 in.)	– – –
Piston Ring/groove Clearance:		
Top	0.035 ~ 0.070 mm (0.0014 ~ 0.0028 in.)	0.17 mm (0.0067 in.)
Second	0.02 ~ 0.06 mm (0.0008 ~ 0.0024 in.)	0.16 mm (0.0063 in.)

Downloaded from www.vulcanriders-sweden.org

Specifications

Item	Standard	Service Limit
Piston Ring Groove Width:		
Top	1.025 ~ 1.040 mm (0.0404 ~ 0.0409 in.)	1.12 mm (0.0441 in.)
Second	1.21 mm ~ 1.23 mm 0.0476 ~ 0.0484 in.)	1.31 mm (0.0516 in.)
Piston Ring Thickness:		
Top	0.97 mm ~ 0.99 mm (0.0382 ~ 0.0390 in.)	0.9 mm (0.0354 in.)
Second	1.17 mm ~ 1.19 mm (0.0461 ~ 0.0469 in.)	1.10 mm (0.0433 in.)
Piston Ring End Gap:		
Top	0.30 ~ 0.40 mm (0.0118 ~ 0.0157 in.)	0.70 mm (0.0276 in.)
Second	0.40 ~ 0.55 mm (0.0157 ~ 0.0217 in.)	0.85 mm (0.0335 in.)
Oil	0.3 ~ 0.9 mm (0.0118 ~ 0.0354 in.)	1.2 mm (0.0472 in.)

Valve Head Thickness

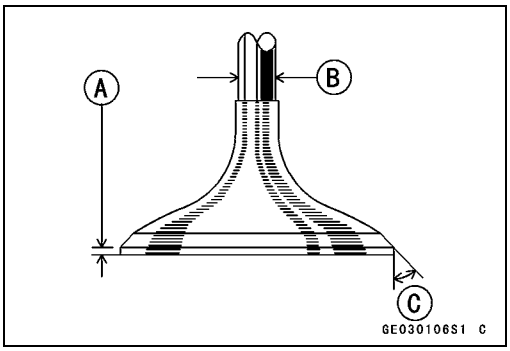

Valve Stem Bend

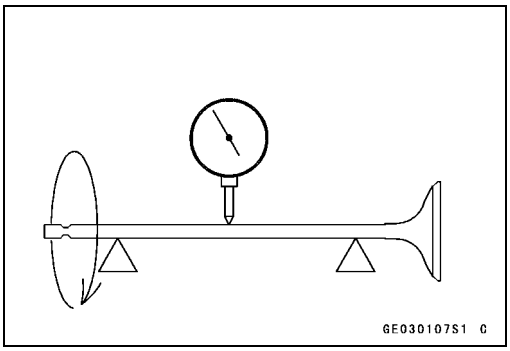

Valve Head Thickness [A]
Valve Stem Diameter [B]
45° [C]

Special Tools - Valve Guide Reamer, ϕ7: 57001-162
Valve Guide Arbor, ϕ7: 57001-163
Compression Gauge, 20 kgf/cm²: 57001-221
Valve Spring Compressor Assembly: 57001-241
Valve Spring Compressor Adapter, ϕ28.2: 57001-243
Piston Pin Puller Assembly: 57001-910
Compression Gauge Adapter, M12 × 1.25: 57001-1018
Spark Plug Wrench, Hex 18: 57001-1024
Piston Ring Compressor Grip: 57001-1095
Valve Seat Cutter, 45° - ϕ32: 57001-1115
Valve Seat Cutter, 45° - ϕ35: 57001-1116
Valve Seat Cutter, 32° - ϕ35: 57001-1121
Valve Seat Cutter Holder, ϕ7: 57001-1126
Valve Seat Cutter Holder Bar: 57001-1128
Valve Seat Cutter, 32° - ϕ33: 57001-1199
Hexagon Wrench, Hex 27: 57001-1210
Piston Pin Puller Adapter, ϕ14: 57001-1211
Valve Seat Cutter, 55° - ϕ35: 57001-1247
Fork Oil Level Gauge: 57001-1290
Piston Ring Compressor Belt, ϕ95 ~ ϕ108: 57001-1358
Filler Cap Driver: 57001-1454

○Compression Gauge Adapter, M12 × 1.25: 57001-1183 can also be used.

Sealant - Kawasaki Bond (Silicone Sealant): 56019-120

Downloaded from www.vulcanriders-sweden.org

Clean Air System

Air Suction Valve Removal

- For rear air suction valve removal, remove the rear exhaust pipe (see this chapter).
- Remove the hose [A].
- Unscrew the mounting bolts [B] and remove the rear air suction valve cover [C].
- Remove the rear air suction valve.

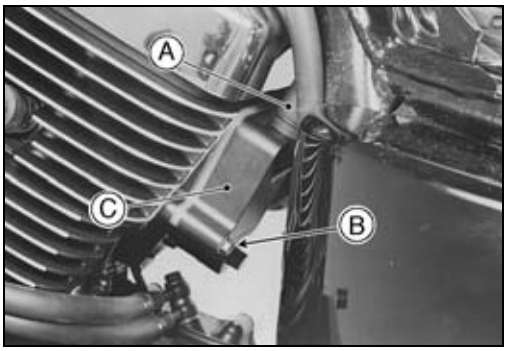

- For front air suction valve removal, remove the radiator mounting bolt and move the radiator forward.
- Remove the hose [A].
- Unscrew the mounting bolts [B] and remove the front air suction valve cover [D].
- Remove the front air suction valve.
  Front [E]

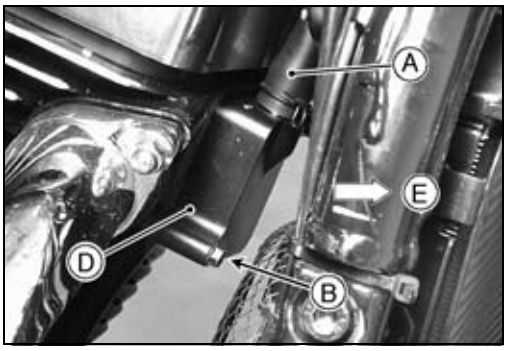

Air Suction Valve Installation

- Replace the gasket with a new one.
- Install each air suction valve so that its wider side [A] of the reed faces left.
- Tighten:

Torque - Air Suction Valve Cover Bolts: 7.4 N·m (0.75 kgf·m, 65 in·lb)

Front Air Suction Valve [B]
Front [C]

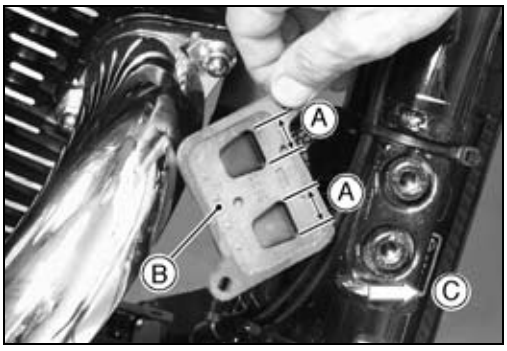

Air Suction Valve Inspection (Periodic Inspection)

- Visually inspect the reeds for cracks, folds, warps, heat damage, or other damage.

★If there is any doubt as to the condition of the reeds [A], replace the air suction valve as an assembly.

- Check the reed contact areas [B] of the valve holder for grooves, scratches, any signs of separation from the holder, or heat damage.

★If there is any doubt as to the condition of the reed contact areas, replace the air suction valve as an assembly.

★If any carbon or other foreign particles have accumulated between the reed and the reed contact area, wash the valve assembly clean with high-flash point solvent.

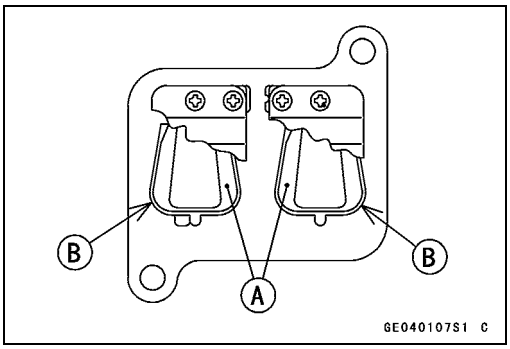

CAUTION

Do not scrape off the deposits with a scraper as this could damage the rubber, requiring replacement of the suction valve assembly.

Downloaded from www.vulcanriders-sweden.org

Clean Air System

Vacuum Switch Valve Removal

- Remove:
  Fuel Tank (see Fuel System chapter)
- Pull off the hoses [A] and take out the vacuum switch valve [B].
  Front [C]

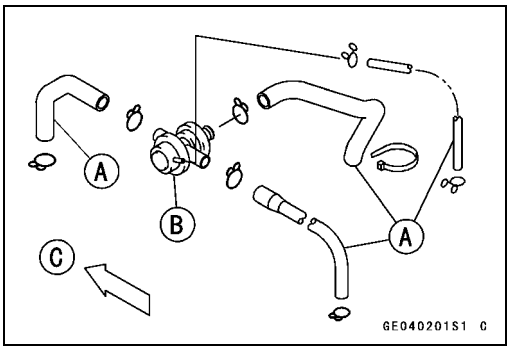

Vacuum Switch Valve Installation

- Install the vacuum switch valve [A] so that the air hole [B] faces downwards.
- Route the hoses correctly (see General Information chapter).
  Front [C]

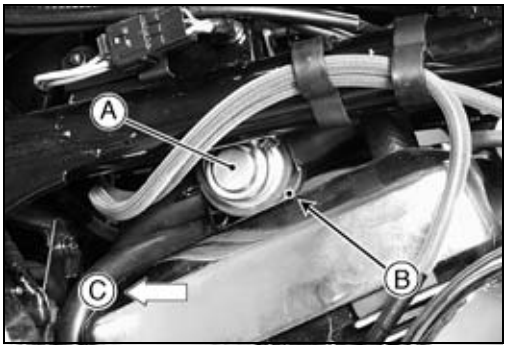

Vacuum Switch Valve Operation Test

- Pull the vacuum switch hose [A] out of the right air cleaner base.
- Start the engine and run it at idle speed.
- Plug the vacuum switch hose end with your finger and feel vacuum pulsing in the hose.

★If there is no vacuum pulsation, check the hose line for leak. If there is no leak, check the vacuum switch valve (see Vacuum Switch Valve Unit Test).

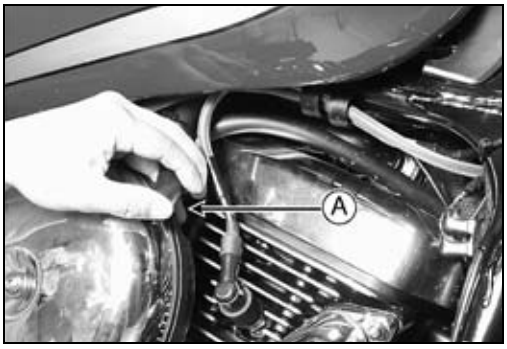

- Apply a soap and water solution or rubber lubricant to the end of the vacuum switch hose [A] and put the hose into the right air cleaner base [B] with the white mark [C] faced forward until the white mark aligns with the top of the grommet [D].
  Rear View [E]

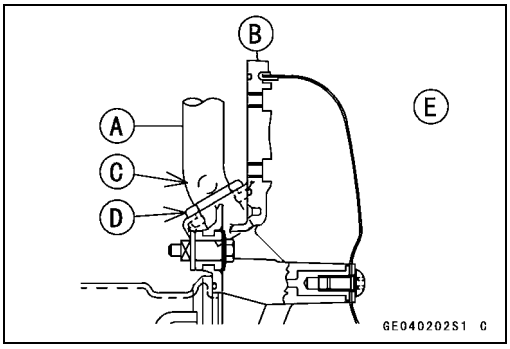

Vacuum Switch Valve Unit Test

- Remove the vacuum switch valve (see Vacuum Switch Valve Removal).
- Connect a commercially available vacuum gauge [A] and syringe [B] (or fork oil level gauge) to the vacuum hoses as shown.

Special Tool - Fork Oil Level Gauge: 57001-1290

Air Flow [C]

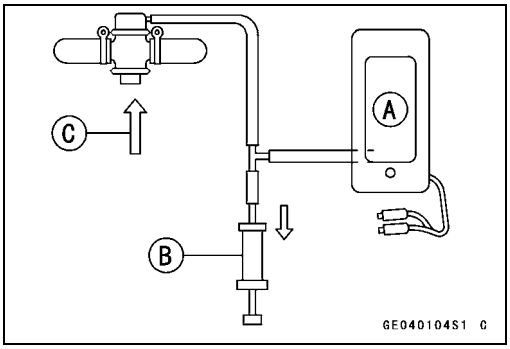

Downloaded from www.vulcanriders-sweden.org

Clean Air System

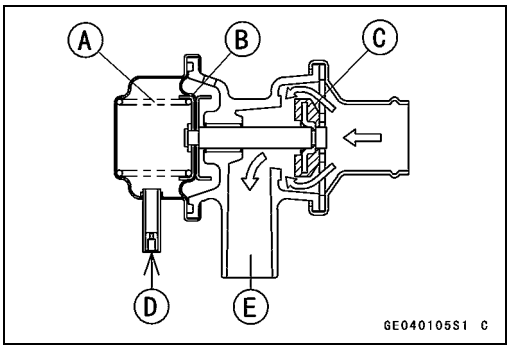

● Gradually raise the vacuum (lower the pressure) applied to the vacuum switch valve, and check the valve operation. When the vacuum is low, the vacuum switch valve should permit air to flow. When the vacuum raises to valve closing pressure, it should stop air flow.
Spring [A]
Diaphragm [B]
Valve [C]
Low Vacuum [D]
Secondary air flows [E].

★If the vacuum switch valve does not operate as described, replace it with a new one.

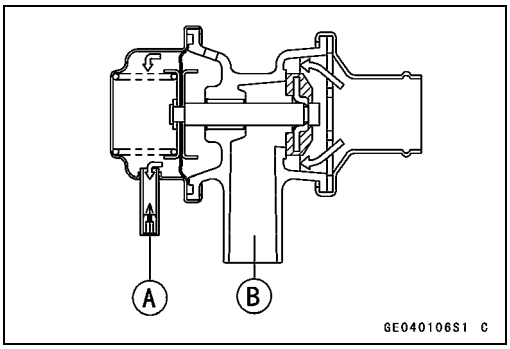

NOTE

○*To check air flow through the vacuum switch valve, just blow through the air cleaner hose.*

Vacuum Switch Valve Closing Pressure (Open → Close)
Standard: 49.3 ~ 57.3 kPa (370 ~ 430 mmHg)

High Vacuum [A]
Secondary air cannot flow [B].

Clean Air System Hose Inspection

● Be certain that all the hoses are routed without being flattened or kinked, and are connected correctly to the right air cleaner base, vacuum switch valve, throttle body, and air suction valve covers.

★If they are not, correct them. Replace them if they are damaged.

Downloaded from www.vulcanriders-sweden.org

Camshaft Chain Tensioner

Removal

CAUTION

This is a non-return type cam chain tensioner. The push rod does not return to its original position once it moves out to take up camshaft chain slack. Observe all the rules listed below:
When removing the tensioner, do not take out the mounting bolts only halfway. Retightening the mounting bolts from this position could damage the tensioner and the camshaft chain. Once the bolts are loosened, the tensioner must be removed and reset as described in "Camshaft Chain Tensioner Installation".
Do not turn over the crankshaft while the tensioner is removed. This could upset the cam chain timing, and damage the valves.

- For the front chain tensioner, remove the lower air cleaner duct and left air cleaner base holder (see Fuel System chapter).
- For the rear chain tensioner, remove the rear exhaust pipe (see this chapter).

○The procedure to remove the front chain tensioner is as follows. The rear chain tensioner removal is the same as for the front chain tensioner.

- Loosen the lockbolt [A] and remove the tensioner cap [B].
- Remove the tensioner mounting bolts [C] and take off the chain tensioner.

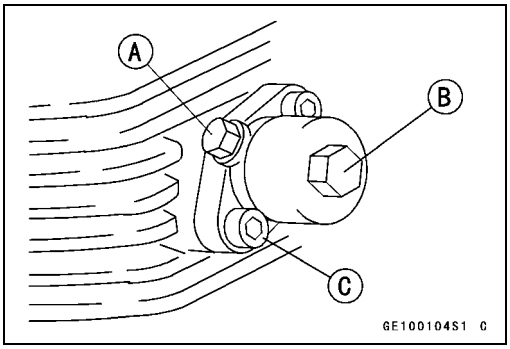

Installation

CAUTION

Be sure to install the camshaft chain tensioner after camshaft chain is timed.

- Push the stopper [A] to release the ratchet and push the push rod [B] into the tensioner body.

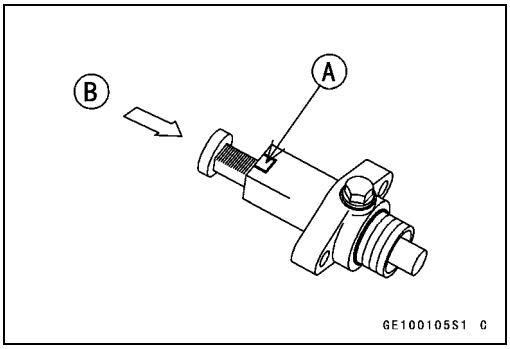

- Install the larger spring [A], and then the ball bearing assy [B].

○Fit the ball bearing assy into the body until it bottoms out, using a thin-bladed screwdriver.

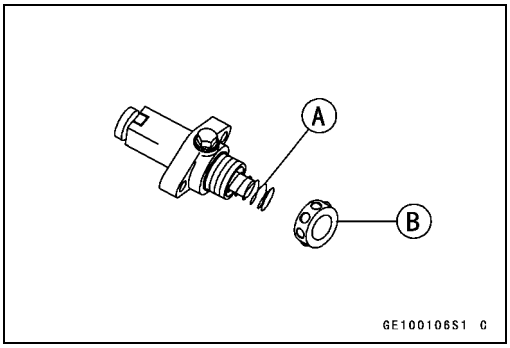

Downloaded from www.vulcanriders-sweden.org

Camshaft Chain Tensioner

- Screw in the lockbolt [A] finger-tight to hold the ball bearing assy temporarily.
- Install the retainer [B].

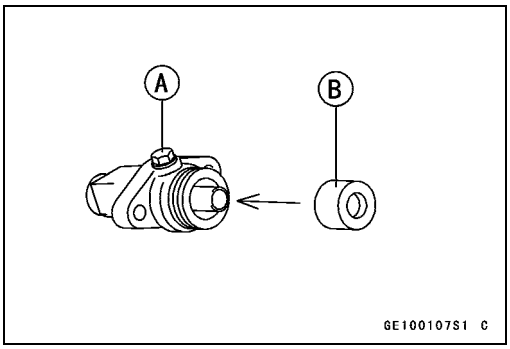

- Install the tensioner body [A] and tighten the mounting bolts [B] to the specified torque.

Torque - Chain Tensioner Mounting Bolts: 9.8 N·m (1.0 kgf·m, 87 in·lb)

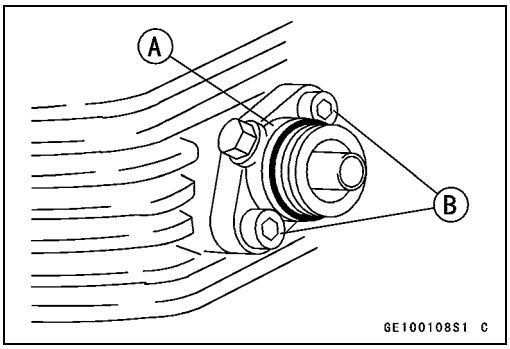

- Install the smaller spring [A] and the tensioner cap [B].
- Tighten the tensioner cap to the specified torque.

Torque - Chain Tensioner Cap: 20 N·m (2.0 kgf·m, 14 ft·lb)

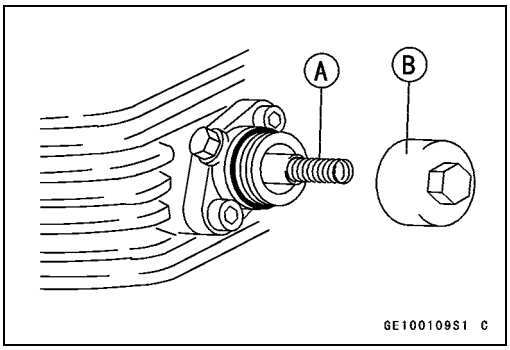

- Loosen the lockbolt [A] and check to be sure that the larger spring clicks, then tighten the lockbolt.

Torque - Chain Tensioner Lockbolt: 4.9 N·m (0.50 kgf·m, 43 in·lb)

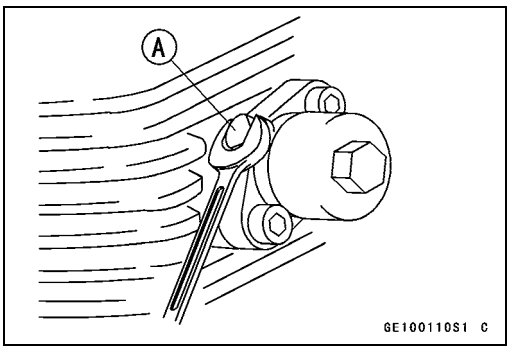

Downloaded from www.vulcanriders-sweden.org

Rocker Case Cover

Removal

- Remove the engine (see Engine Removal/Installation chapter).
- Remove the bolts [A] and take off the cover [B] from the rocker case.

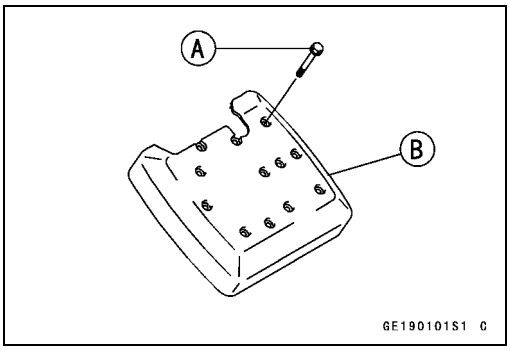

- Take out the oil filter springs [A] and HLA oil filters [B].



Installation

- Replace the HLA oil filters [A] with new ones.
- After installing the rocker case, fill the oil reservoir [B] with engine oil.

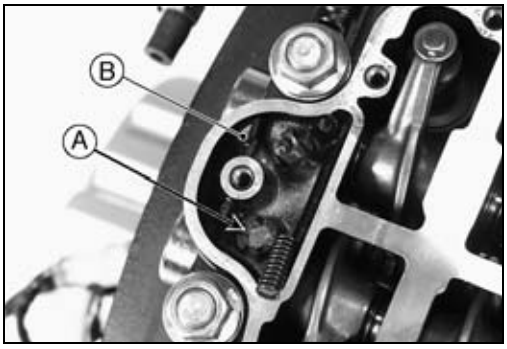

- Replace the cover gasket with a new one.
- Tighten the cover bolts to the specified torque following the tightening sequence.
  Dowel Pins [A]
  Inlet Side [B]

Torque - Rocker Case Cover Bolts: 8.8 N·m (0.90 kgf·m, 78 in·lb)

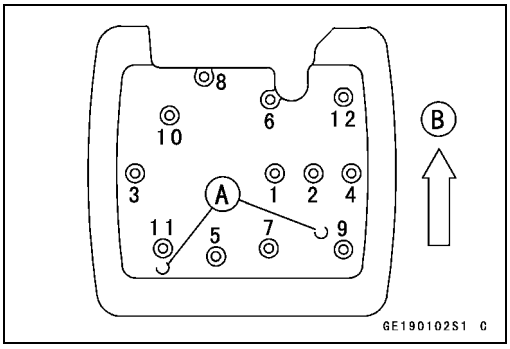

Assembly

- Apply adhesive to the rubber dampers [A] and install them on the rocker case cover [B] as shown.

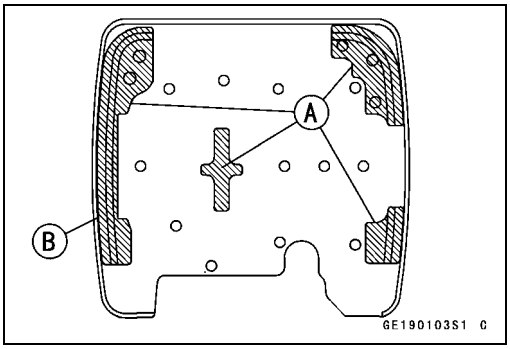

Downloaded from www.vulcanriders-sweden.org

Rocker Case

Removal

- Remove the engine (see Engine Removal/Installation chapter).
- Remove the rocker case covers (see this chapter).
- Remove the alternator outer cover (see Electrical System chapter).
- Remove the timing inspection plug and rotor bolt plug.

Special Tool - Filler Cap Driver: 57001-1454

- Turn the crankshaft counterclockwise [A] and align the "**F**" mark (TDC mark for front piston) [B] with the middle of the notch [C].

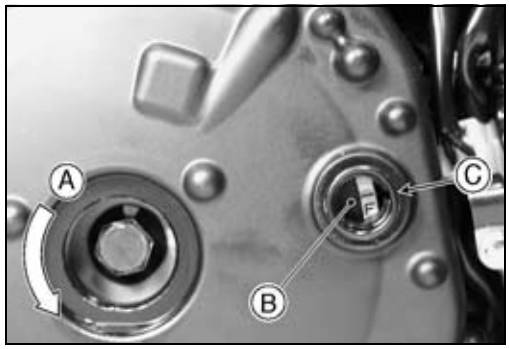

- Remove the oil hose flange bolt [A].
- Remove the camshaft chain tensioner (see Camshaft Chain Tensioner Removal).
- Remove the rocker case bolts [B], smaller nuts [C], and then larger nuts [D].
- Using the pry points [E], take the rocker case out of the cylinder head.

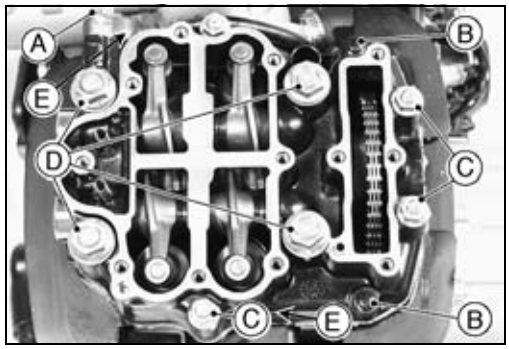

- Remove the rocker shafts [A], and take the rocker arms [B] out of the rocker case.
- Take out the oil filters if necessary.
- Remove the lash adjuster if necessary (see HLA Removal).

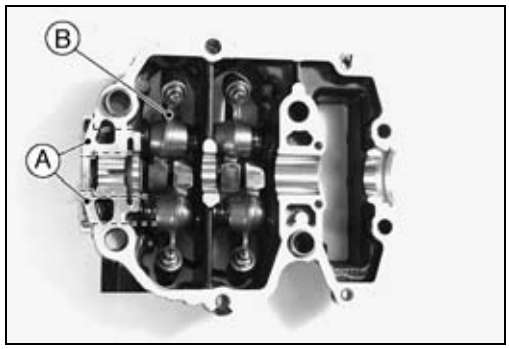

Installation

CAUTION

The cylinder head and rocker case are machined in the assembled state, so they must be used as a set. Be careful not to mix them up for front and rear cylinders.

- Install the rocker arms [A] and retaining springs [B] on each rocker shaft as shown.

○These retaining springs are the same.

○The exhaust rocker arm [C] on the chain tunnel side is different from the others.

Exhaust Side [D]

○Be careful not to tip the rocker arm and not to allow the oil to leak out of HLA.

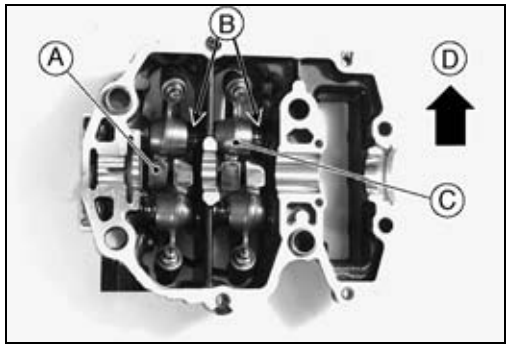

Downloaded from www.vulcanriders-sweden.org

Rocker Case

- Replace the O-rings with new ones and install them on the rocker shaft.
- Tighten the rocker shafts to the specified torque.

Torque - Rocker Shafts: 25 N·m (2.5 kgf·m, 18 ft·lb)

- Apply silicone sealant [A] to the rocker case mating surface and the outer circumference of the plugs as shown.

Sealant - Kawasaki Bond (Silicone Sealant): 56019-120

○Do not apply silicone sealant around the camshaft bearing.

Inlet Side [B]

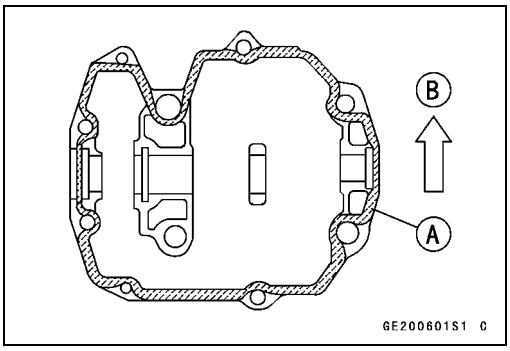

- Apply molybdenum disulfide oil to the threads and seating surface of ϕ12 mm nuts and both sides of washers.
- Tighten the rocker case nuts and bolts temporarily following the tightening sequence shown, and then tighten them to the specified torque.

Torque - Rocker Case Nuts ϕ12 mm: 78 N·m (8.0 kgf·m, 58 ft·lb)
Rocker Case Nuts ϕ8 mm: 25 N·m (2.5 kgf·m, 18 ft·lb)
Rocker Case Bolts ϕ6 mm: 8.8 N·m (0.90 kgf·m, 78 in·lb)

Inlet Side [A]

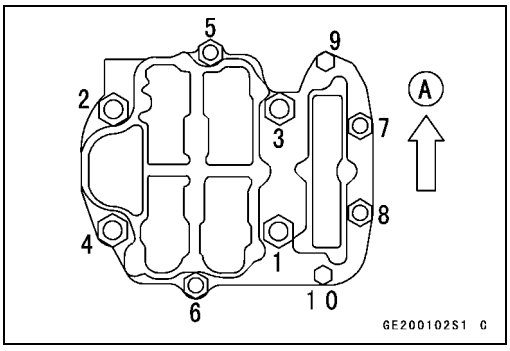

- Replace the HLA oil filters [A] with new ones.
- After installing the rocker case, fill the oil reservoir [B] with engine oil.
- Tighten:

Torque - Oil Hose Flange Bolts: 9.8 N·m (1.0 kgf·m, 87 in·lb)

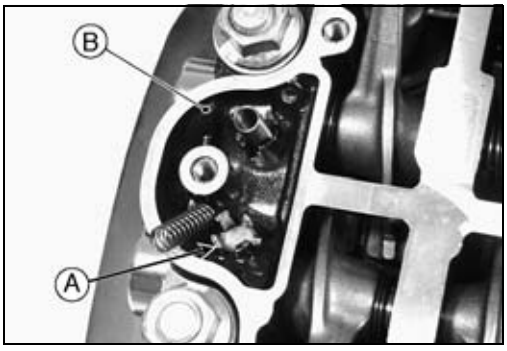

- Tighten the cylinder head nuts [A] and cylinder nuts [B] to the specified torque.

Torque - Cylinder Head Nuts, Cylinder Nuts: 25 N·m (2.5 kgf·m, 18 ft·lb)

Rocker Cases [C]
Cylinder Heads [D]
Cylinders [E]

- Tighten:

Torque - Timing Inspection Plug, Rotor Bolt Plug: 1.5 N·m (0.15 kgf·m, 13 in·lb)

- Install the engine (see Engine Removal/Installation chapter).

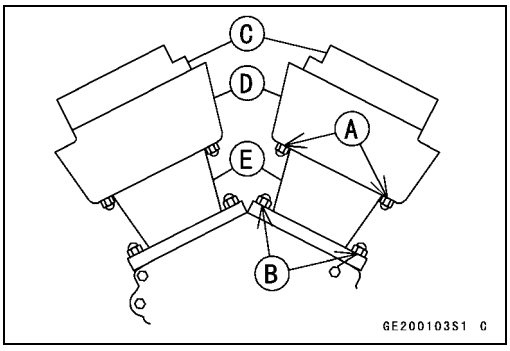

Downloaded from www.vulcanriders-sweden.org

Rocker Case

Rocker Arm Assembly

- Prepare a flat-end bar [A] and a block [B] with a recess [C].
- Press the oil chamber [D] for the HLA into the rocker arm end [E] until the chamber end is even with the step [F] of the hole.

○Install the oil chamber as shown so that the air bleed hole [G] is placed within 120 degrees [H]. This makes HLA bleeding easier.

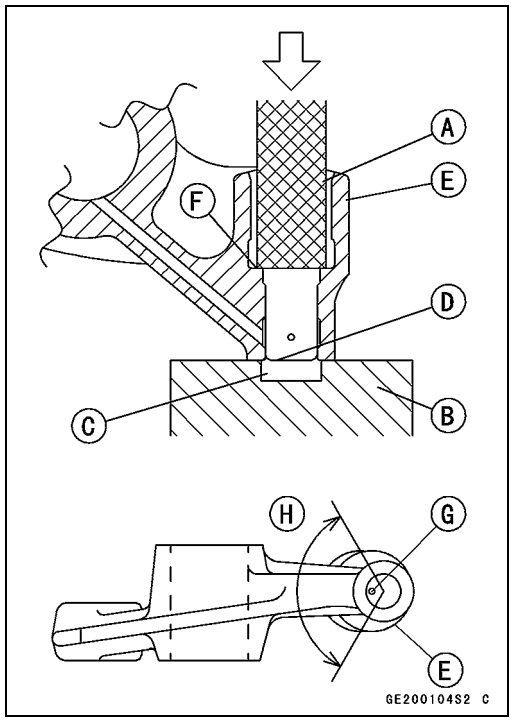

Downloaded from www.vulcanriders-sweden.org

HLA (Hydraulic Lash Adjuster)

HLA Removal

- Remove the rocker case (see Rocker Case Removal).
- Remove the rocker arms.
- Pull the HLA [B] out of the rocker arm [A] with your fingers.

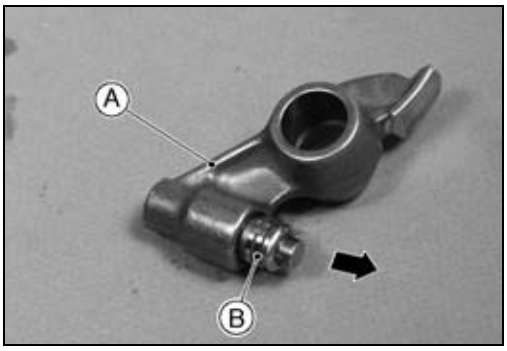

CAUTION

Be careful not to damage or deform a lash adjuster by tapping it during removal or installation.
Do not drop the lash adjuster or hit it sharply. If it is damaged, the plunger will not operate smoothly.

HLA Air Bleeding

- Fill a container with engine oil.
- Prepare a pin and cut its needle to 2.1 ~ 2.3 mm (0.083 ~ 0.091 in.) long [A]. Grind its cutting edge [B] smooth.
- Push in the check valve of the HLA [D] with the needle of the pin [C] and move the plunger up and down in the oil bath.

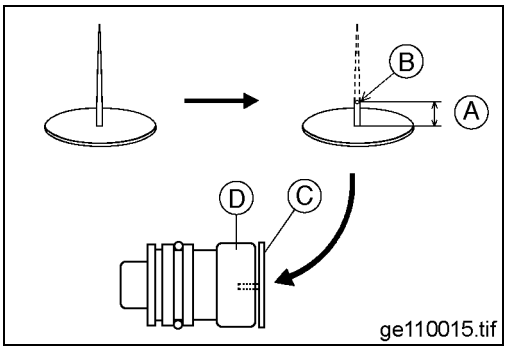

CAUTION

Do not push the check valve in more than 2.1 ~ 2.3 mm (0.083 ~ 0.091 in.). Pushing too deep may cause the damage of the HLA.

HLA Installation

- Check that the HLA plunger is not damaged.

★If the plunger does damage, replace the HLA.

HLA Body [A]
O-ring [B]
Plunger Spring [C]
Pivot Plunger [D]
Check Valve [E]
Check Valve Spring [F]

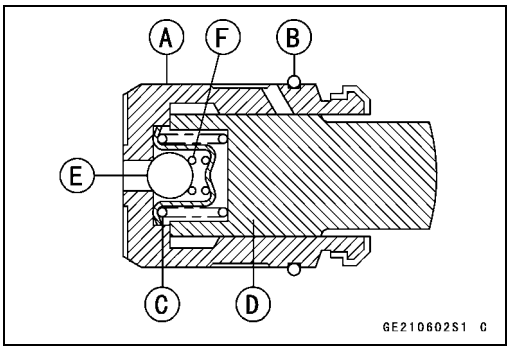

- Air-bleed the HLA (see HLA Air Bleeding).
- Soak a rocker arm [A] in engine oil, and then insert the HLA [B] into the rocker arm.

○Be careful not to tip the rocker arm having the HLA, and not to allow engine oil to leak out of the HLA.

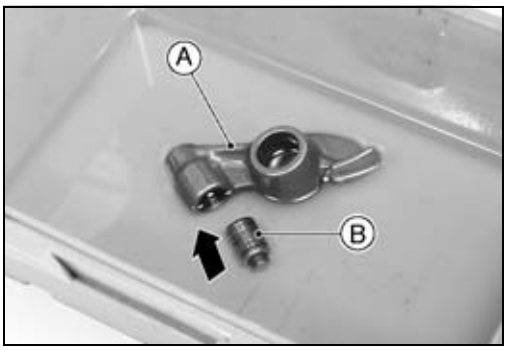

Inspection

- Remove the rocker arm.
- Pull the HLA out of the rocker arm with your fingers.
- Push the plunger of the HLA with your fingers.

★If the plunger sinks into the HLA body, repeat the air bleeding procedure and then push the plunger.

★If the plunger sinks into the HLA body again, replace the HLA.

Downloaded from www.vulcanriders-sweden.org

Camshafts

Removal

- Remove the timing inspection plug and rotor bolt plug.

  Special Tool - Filler Cap Driver: 57001-1454

- Turn the crankshaft counterclockwise [A] and align the "**F**" mark [B] (TDC mark for the front piston) with the middle of the notch [C].



- Remove the front and rear rocker case covers (see Rocker Case Cover Removal).
- Remove the front and rear rocker cases (see Rocker Case Removal).
- Remove the camshaft [B] along with the KACR [A].

○Remove the camshaft plug [C].

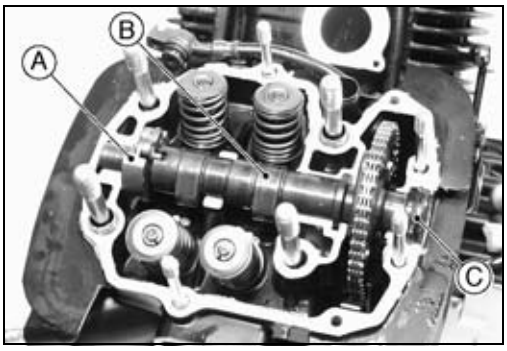

- Stuff a clean cloth into the chain tunnel to keep any parts from dropping into the crankcase.

CAUTION

The crankshaft may be turned while the camshafts are removed. Always pull the chain taut while turning the crankshaft. This avoids kinking the chain on the lower (crankshaft) sprocket. A kinked chain could damage both chain and sprocket.

Installation

○The front camshaft [A] and rear camshaft [B] are different. The rear camshaft has a groove [C].

- Apply molybdenum disulfide oil to all cam parts and journals.

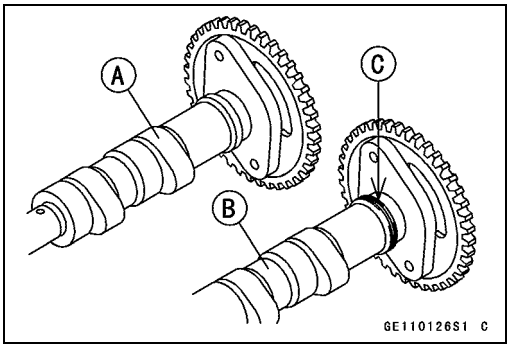

VN1500-N4 ~

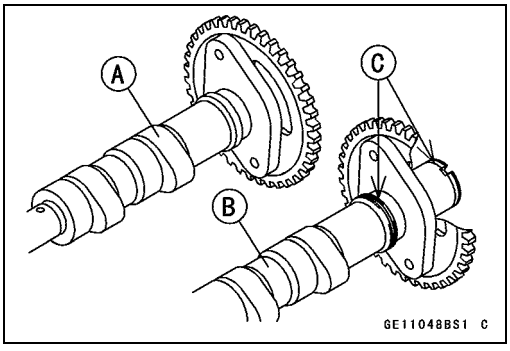

Downloaded from www.vulcanriders-sweden.org

Camshafts

● Install the KACR on each camshaft.
○The front and rear KACR are the same except for the spring [A].
○The rear KACR has a yellow coating spring. Do not confuse the springs.

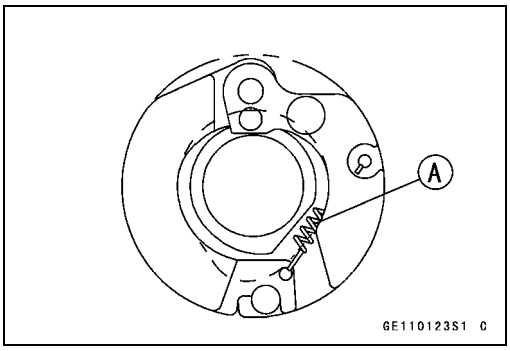

VN1500-N4 ~
● Install the KACR on each camshaft.
○The front KACR [A] and rear KACR [B] are different (inside view). Do not confuse these KACRs.

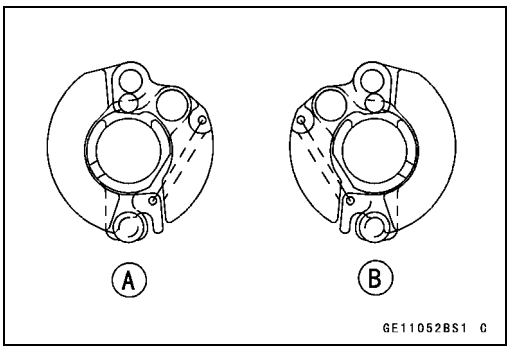

● Check that the "**F**" mark [A] aligns with the middle of the notch [B] (front piston TDC).
★If necessary, align them.

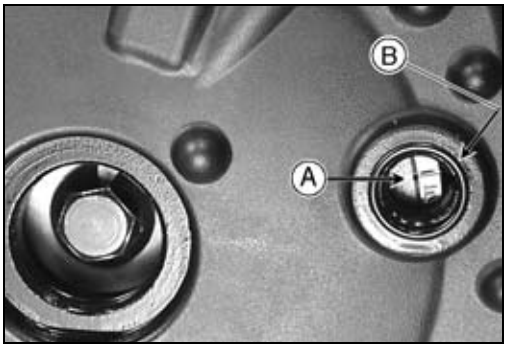

● First, install the front camshaft.
○Engage the front camshaft sprocket with the camshaft chain as shown.
Timing Marks [A]
F mark [B]
Cylinder Head Upper Surface [C]
Front [D]
○Pull the front side (exhaust side) of the chain taut to install the camshaft.
○Install the front chain tensioner (see this chapter). The timing marks must be aligned with the cylinder head upper surface.

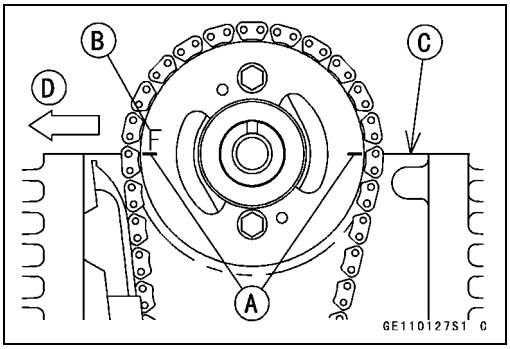

Downloaded from www.vulcanriders-sweden.org

Camshafts

● Next, install the rear camshaft.
○Check to be sure that the front camshaft chain timing is correct.
○Turn the crankshaft counterclockwise [A].

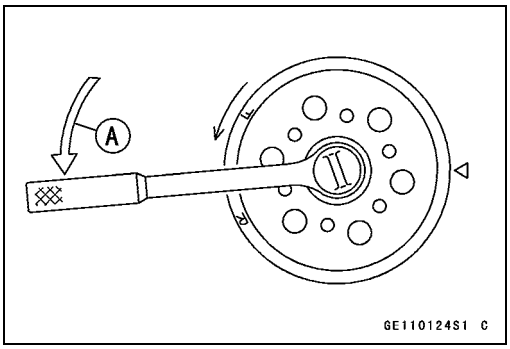

● Align the "**R**" mark [A] (TDC mark for the rear piston) with the middle of the notch [B] (310° turn from the front piston TDC).

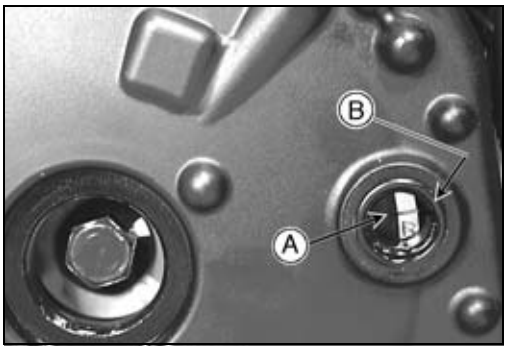

● Engage the rear camshaft sprocket with the camshaft chain as shown.
Timing Marks [A]
R Mark [B]
Cylinder Head Upper Surface [C]
Front [D]
○Pull the front side (inlet side) of the chain taut to install the camshaft.
● Install the rear chain tensioner (see Camshaft Chain Tensioner Installation).
● Check the front and rear chain timing again.
○The timing marks must be aligned with the cylinder head upper surface and positioned as shown after chain tensioner installation.

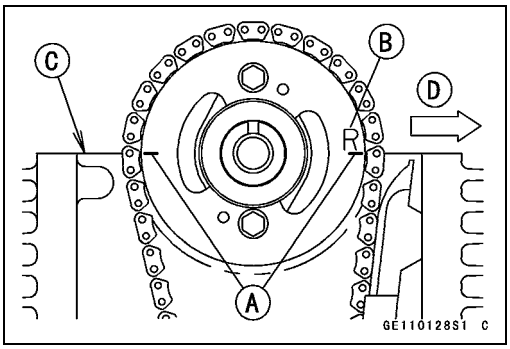

● Install:
Rocker Cases and Rocker Case Covers (see Rocker Case and Rocker Case Cover Installation)
Timing Inspection Plug
Rotor Bolt Plug
● Tighten:

Torque - Timing Inspection Plug, Rotor Bolt Plug: 1.5 N·m (0.15 kgf·m, 13 in·lb)

Downloaded from www.vulcanriders-sweden.org

Camshafts

Camshaft Sprocket Installation

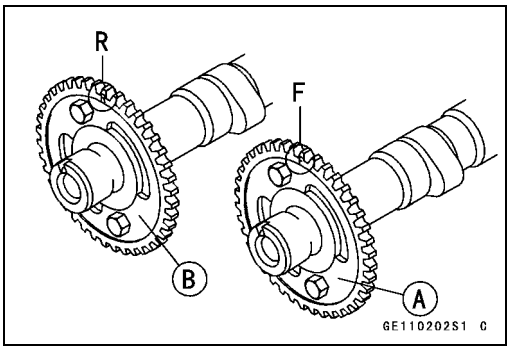

- Use the sprocket marked **F** for the front camshaft [A] and the sprocket marked **R** for the rear camshaft [B].
- Apply a non-permanent locking agent to the camshaft sprocket bolts and tighten them to the specified torque.

Torque - Camshaft Sprocket Bolts: 15 N·m (1.5 kgf·m, 11 ft·lb)

Camshaft/Rocker Case Wear Inspection

- Cut strips of plastigage to journal width. Place a strip on each journal parallel to the camshaft installed in the correct position.
- Measure each clearance between the camshaft and the rocker case using plastigage.

NOTE

○*Do not turn the camshaft when the plastigage is between the journal and camshaft cap.*

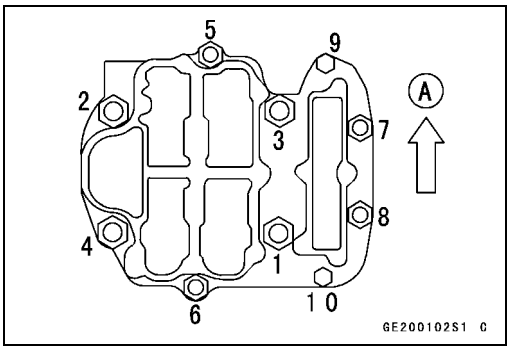

- Apply molybdenum disulfide oil to the threads and seating surface of ϕ12 mm nuts and both sides of washers.
- Tighten the rocker case nuts and bolts temporarily following the tightening sequence shown, and then tighten them to the specified torque.

Torque - Rocker Case Nuts ϕ12 mm: 78 N·m (8.0 kgf·m, 58 ft·lb)
Rocker Case Nuts ϕ8 mm: 25 N·m (2.5 kgf·m, 18 ft·lb)
Rocker Case Bolts ϕ6 mm: 8.8 N·m (0.90 kgf·m, 78 in·lb)

Inlet Side [A]

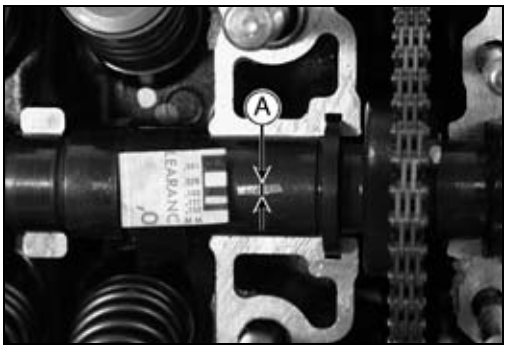

- Remove the rocker case again, and measure the plastigage width [A] to determine the clearance between each journal and the rocker case. Measure the maximum plastigage width.

Camshaft/Rocker Case Clearance

Standard:	**(ϕ25)**	**0.020 ~ 0.062 mm (0.0008 ~ 0.0024 in.)**
	(ϕ17)	**0.016 ~ 0.055 mm (0.0006 ~ 0.0022 in.)**
Service Limit:	**(ϕ25)**	**0.15 mm (0.0059 in.)**
	(ϕ17)	**0.14 mm (0.0055 in.)**

Downloaded from www.vulcanriders-sweden.org

Camshafts

★If any clearance exceeds the service limit, measure the diameter of each camshaft journal with a micrometer.

Camshaft Journal Diameter

Standard:	**(φ25)**	**24.959 ~ 24.980 mm**
		(0.9826 ~ 0.9835 in.)
	(φ17)	**16.966 ~ 16.984 mm**
		(0.6680 ~ 0.6687 in.)
Service Limit:	**(φ25)**	**24.93 mm (0.9815 in.)**
	(φ17)	**16.93 mm (0.6665 in.)**

★If the camshaft journal diameter is less than the service limit, replace the camshaft with a new one and measure the clearance again.

★If the clearance still remains out of the limit, replace the cylinder head and rocker case.

CAUTION

The rocker case and cylinder head are machined in the assembled state, so they must be replaced as a set.

Front Camshaft Chain Removal

- Remove:
  Front Camshaft (see Camshaft Removal)
  Alternator Rotor (see Electrical System chapter)
  Lower Chain Guide [A] (left view)
- Take out the front camshaft chain [B].



Rear Camshaft Chain Removal

- Remove:
  Rear Camshaft (see Camshaft Removal)
  Clutch (see Clutch chapter)
  Starter Clutch Gear (see Crankshaft/Transmission chapter)
  Starter Clutch (see Crankshaft/Transmission chapter)
  Primary Gear Bolt (see Crankshaft/Transmission chapter)
  Primary Gear (see Crankshaft/Transmission chapter)
  Lower Chain Guide [A] (right view)
- Take out the rear camshaft chain [B].



Downloaded from www.vulcanriders-sweden.org

KACR (Kawasaki Automatic Compression Release)

Due to the simplicity of the mechanism, no periodic maintenance is needed. There are only two symptoms of problems with the KACR mechanism [A]; compression is not released during starting, and compression is released during running.

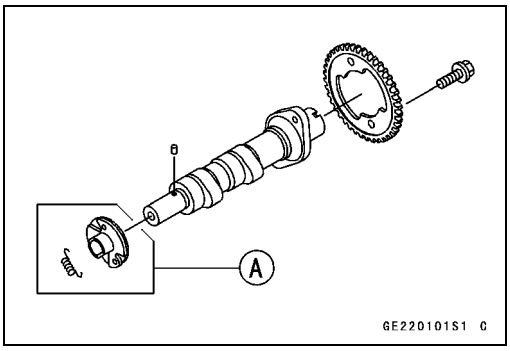

Removal

- Remove the engine (see Engine Removal/Installation chapter).
- Remove the camshaft [A] (see Camshaft Removal).
- Take the KACR unit [B] out of the camshaft.

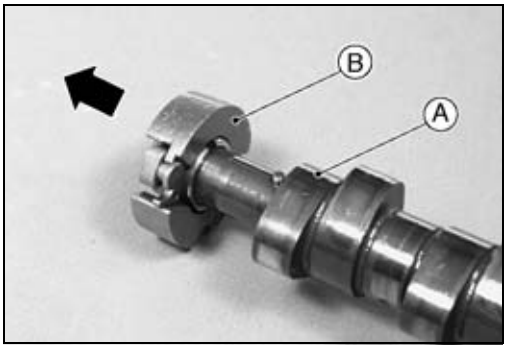

Installation

- Fit the pin [A] into the notch [B], and install the KACR [C] onto the camshaft [D].

○The front and rear KACR units are the same except for the spring. The rear KACR unit has a yellow painting spring. Do not mix up these springs.

★If a new camshaft is to be used, apply a thin coat of molybdenum disulfide grease to the cam surfaces.

- Apply engine oil to to all cam parts.
- Apply molybdenum disulfide oil to the camshaft journals.

○The molybdenum disulfide oil is a mixture of engine oil and molybdenum disulfide grease with a weight ratio (10 : 1).

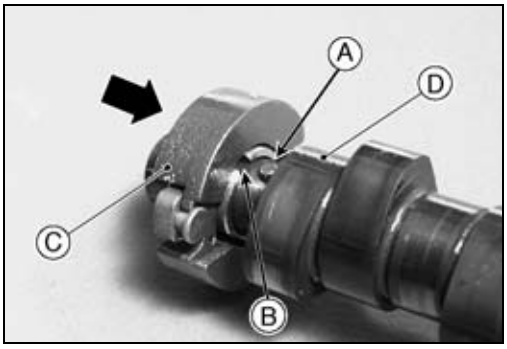

Inspection

○The cylinder compression is not released during starting (abnormal): the pin [A] stays within the cam [B] and will not push up the exhaust rocker arm.

- Remove the KACR unit and visually inspect the spring [C].

★If the spring is damaged, deformed, or missing, replace the spring.

- Remove the spring and move the weights [D] back and forth.

★If the weights do not move smoothly all the way, replace the KACR unit. Also inspect the exhaust rocker arm for any damage, and replace the rocker arm if necessary.

Stopper [E]

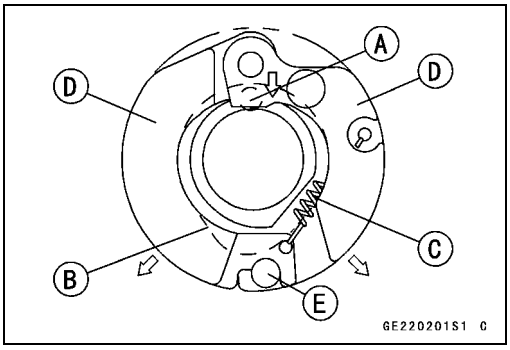

Downloaded from www.vulcanriders-sweden.org

KACR (Kawasaki Automatic Compression Release)

VN1500-N4 ~
Rear KACR unit [F]

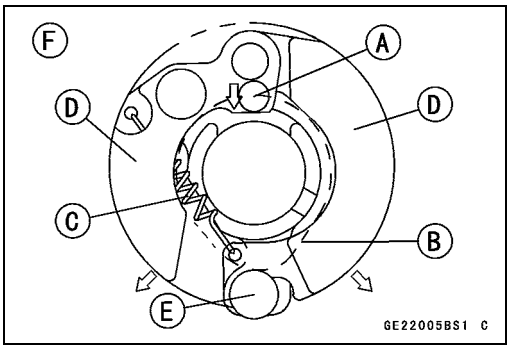

○The cylinder compression is released while the engine is running (abnormal): the pin [A] stays out the cam [B] and pushes up the exhaust rocker arm.
● Remove the spring [C] and move the weights [D] back and forth.
★If the weights do not move easily from the retracted position, replace the KACR unit. Also inspect the exhaust rocker arm for any damage, and replace the rocker arm if necessary.
Stopper [E]

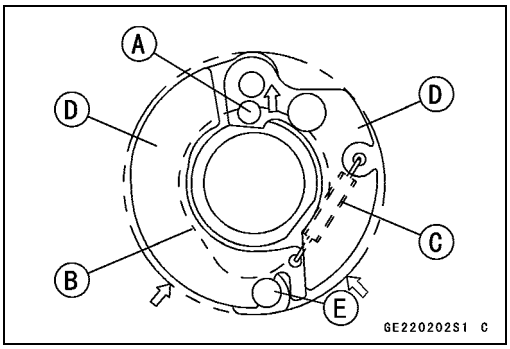

VN1500-N4 ~
Rear KACR unit [F]

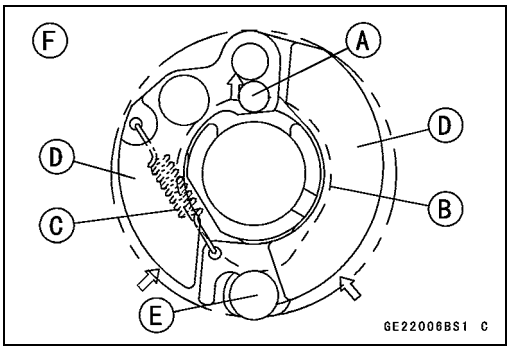

Downloaded from www.vulcanriders-sweden.org

Cylinder Head

Cylinder Compression Measurement

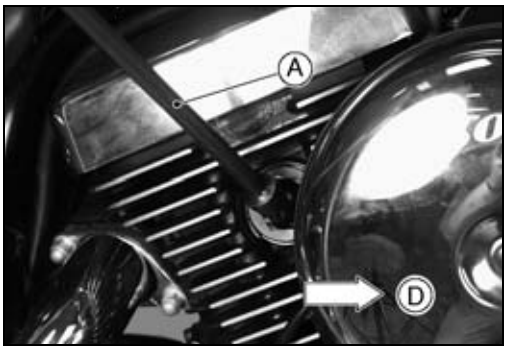

NOTE

○*Be sure the battery is fully charged.*

- Warm up the engine thoroughly.
- Stop the engine.
- Remove one spark plug and attach the compression gauge and adapter firmly into the spark plug hole. Do not remove the other spark plug, only the plug lead.
  Front [D]
- For the other cylinder, remove both spark plugs.

Special Tools - Spark Plug Wrench, Hex 18: 57001-1024 [A]
Compression Gauge, 20 kgf/cm²: 57001-221 [B]
Compression Gauge Adapter, M12 × 1.25: 57001-1018 [C]

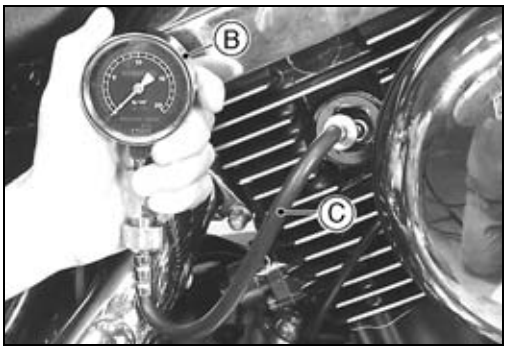

- Using the starter motor, turn the engine over with the throttle fully open until the compression gauge stops rising; the compression is the highest reading obtainable.

Cylinder Compression (Usable Range)
340 ~ 590 kPa (3.5 ~ 6.0 kgf/cm², 50 ~ 85 psi) @300 r/min (rpm)

○The compression gauge adapter: 57001-1183 can also be used.

- Repeat the measurement for the other cylinder.
- Install the spark plugs.
- Tighten:

Torque - Spark Plugs: 18 N·m (1.8 kgf·m, 13 ft·lb)

Downloaded from www.vulcanriders-sweden.org

Cylinder Head

The following table should be consulted if the obtainable compression reading is not within the usable range.

Problem	Diagnosis	Remedy (Action)
Cylinder compression is higher than usable range	Carbon buildup on piston and in combustion chamber possibly due to damaged valve stem, valve guide, stem oil seal and/or damaged piston oil rings (This may be indicated by white exhaust smoke).	Remove the carbon deposits and replace damaged parts if necessary.
	Incorrect cylinder head gasket thickness.	Replace the gasket with a standard part.
	Damaged or missing compression release cam spring	Replace the spring.
	Compression release weights do not move smoothly.	Replace the compression release unit.
Cylinder compression is lower than usable range	Gas leakage around cylinder head	Replace damaged gasket and check cylinder head warp.
	Bad condition of valve seats, valves, and valve springs	Repair them if necessary.
	HLA seizure.	Replace the HLA.
	Incorrect piston/cylinder clearance	Replace the piston and/or cylinder.
	Piston seizure.	Inspect the cylinder and liner and replace/repair the cylinder and/or piston as necessary.
	Bad condition of piston ring and/or piston ring grooves.	Replace the piston and/or the piston rings.
	Compression release weights do not move smoothly.	Replace the compression release unit.

Removal

- Remove:
  Engine (see Engine Removal/Installation chapter)
  Rocker Cases (see this chapter)
  Camshafts (see this chapter)
  Spark Plugs [A]
  Spark Plug Retainers [B]

Special Tool - Hexagon Wrench, Hex 27 [C]: 57001-1210

○The camshaft chain comes off.

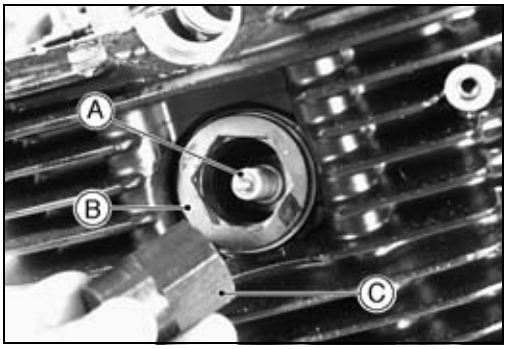

- Remove the coolant drain plug [A] and drain the coolant from the cylinder and cylinder head.
- Remove the cylinder head nuts [B].
- Take the cylinder head off the cylinder.

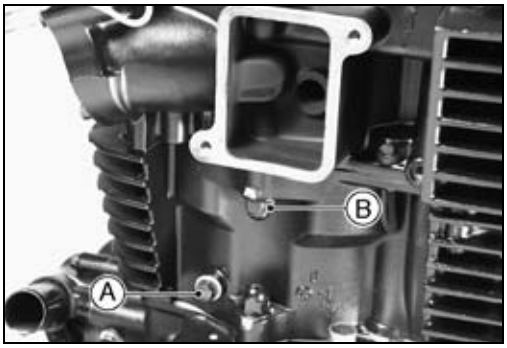

Downloaded from www.vulcanriders-sweden.org

Cylinder Head

Installation

○The front cylinder head [A] has an **F** mark while the rear cylinder head [B] has an **R** mark. Be careful not to mix them up.

Front [C]

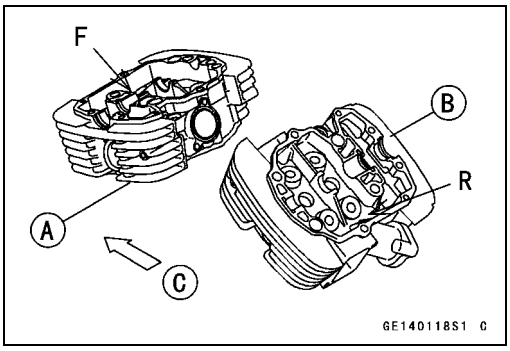

CAUTION

The cylinder head and rocker case are machined in the assembled state, so they must be used as a set.

- Replace the cylinder head gasket with a new one.
- Tighten the cylinder head nuts temporarily (These nuts are tightened to the specified torque after installing rocker case installation).
- Pull the camshaft chain [A] up the chain tunnel, insert the spark plug retainer [B] through the chain loop, and tighten it.

Special Tool - Hexagon Wrench, Hex 27: 57001-1210 [C]

Torque - Spark Plug Retainer: 12 N·m (1.2 kgf·m, 104 in·lb)
Spark Plugs: 18 N·m (1.8 kgf·m, 13 ft·lb)



- Install:
  Camshafts (see Camshaft Installation)
  Rocker Cases (see Rocker Case Installation)
- Tighten:

Torque - Cylinder Head Nuts and Cylinder Nuts: 25 N·m (2.5 kgf·m, 18 ft·lb)

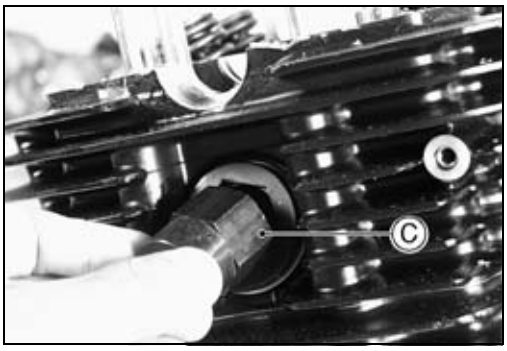

Downloaded from www.vulcanriders-sweden.org

Valves

Valve Clearance Adjustment

NOTE

○*Since the hydraulic lash adjusters constantly maintain zero clearance, it is not necessary to inspect or adjust the valve clearance.*

Valve Removal

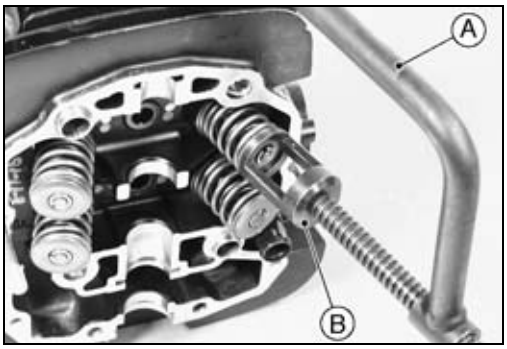

- Remove the cylinder head (see this chapter).
- Swing open the rocker arm.
- Using the valve spring compressor assembly, remove the valve.

Special Tools - Valve Spring Compressor Assembly: 57001 -241 [A]
Valve Spring Compressor Adapter, ϕ28.2: 57001-243 [B]

Valve Installation

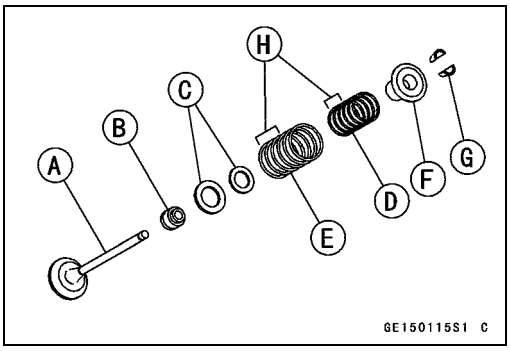

- Replace the oil seal with a new one.
- Apply a thin coat of molybdenum disulfide grease to the valve stem before valve installation.
- Install the springs so that the closed coil end faces downwards.

Valve Stem [A]
Oil Seal [B]
Spring Seats [C]
Inner Spring [D]
Outer Spring [E]
Retainer [F]
Split Keepers [G]
Closed Coil End [H]

Valve Guide Removal

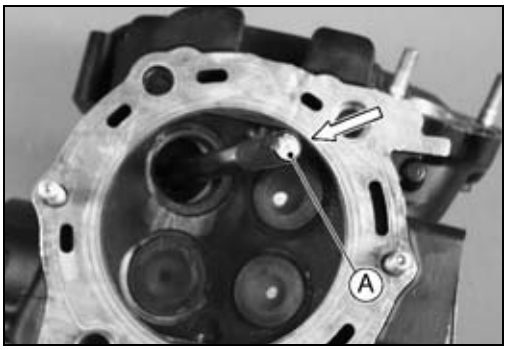

- Remove:

Valve (see Valve Removal)
Oil Seal
Spring Seat

- Heat the area around the valve guide to 120 ~ 150°C (248 ~ 302°F), and hammer lightly on the valve guide arbor [A] to remove the guide from the top of the head.

CAUTION

Do not heat the cylinder head with a blow torch. This will warp the head. Soak the cylinder head in oil and heat the oil.

Special Tool - Valve Guide Arbor, ϕ7: 57001-163

Downloaded from www.vulcanriders-sweden.org

Valves

Valve Guide Installation

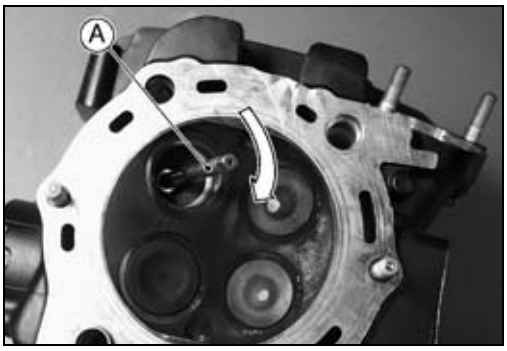

- Apply oil to the valve guide outer surface before installation.
- Heat the area around the valve guide hole to about 120 ~ 150°C (248 ~ 302°F) (see Valve Guide Removal).
- Drive the valve guide in from the top of the head using the valve guide arbor. The flange stops the guide from going in too far.

Special Tool - Valve Guide Arbor, ϕ7: 57001-163

- Wait until the cylinder head cools down and then ream the valve guide with the valve guide reamer [A] even if the old guide is reused.

○Turn the reamer in a clockwise direction until the reamer turns freely in the guide. Never turn the reamer counterclockwise or it will be dulled.

○Once the guides are reamed they must be cleaned thoroughly.

Special Tool - Valve Guide Reamer, ϕ7: 57001-162

Valve-to-Guide Clearance Measurement

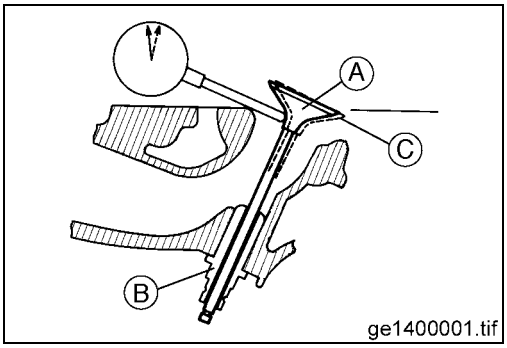

★If a small bore gauge is not available, inspect the valve guide wear by measuring the valve to valve guide clearance with the wobble method as indicated below.

- Insert a new valve [A] into the guide [B] and set a dial gauge against the stem perpendicular to it as close as possible to the cylinder head mating surface.
- Move the stem back and forth [C] to measure valve/valve guide clearance.
- Repeat the measurement in a direction at a right angle (90°) to the first.

★If the reading exceeds the service limit, replace the guide.

NOTE

○*The reading is not actual valve/valve guide clearance (extended clearance) because the measuring point is above the guide.*

Valve/Valve Guide Clearance (Wobble Method)

Standard:

Exhaust	**0.08 ~ 0.16 mm (0.0031 ~ 0.0063 in.)**
Inlet	**0.05 ~ 0.13 mm (0.0020 ~ 0.0051 in.)**

Service Limit:

Exhaust	**0.30 mm (0.0118 in.)**
Inlet	**0.27 mm (0.0106 in.)**

Downloaded from www.vulcanriders-sweden.org

Valves

Valve Seat Inspection

- Remove the valve (see Valve Removal).
- Check the valve seating surface [A] between the valve [B] and valve seat [C].

○Measure the outside diameter [D] of the seating pattern on the valve seat with vernier calipers.

★If the outside diameter is too large or too small, repair the seat (see Seat Repair).

Valve Seating Surface Outside Diameter
Standard:
Exhaust 28.9 ~ 29.1 mm (1.1378 ~ 1.1457 in.)
Inlet 31.9 ~ 32.1 mm (1.2559 ~ 1.2638 in.)

○Measure the seat width [E] of the portion where there is no build-up carbon (white portion) of the valve seat.
Good [F]

★If the width is too wide [G], too narrow [H] or uneven [J], repair the seat (see Valve Seat Repair).

Valve Seating Surface Width
Standard:
Exhaust, Inlet 0.5 ~ 1.0 mm (0.02 ~ 0.04 in.)

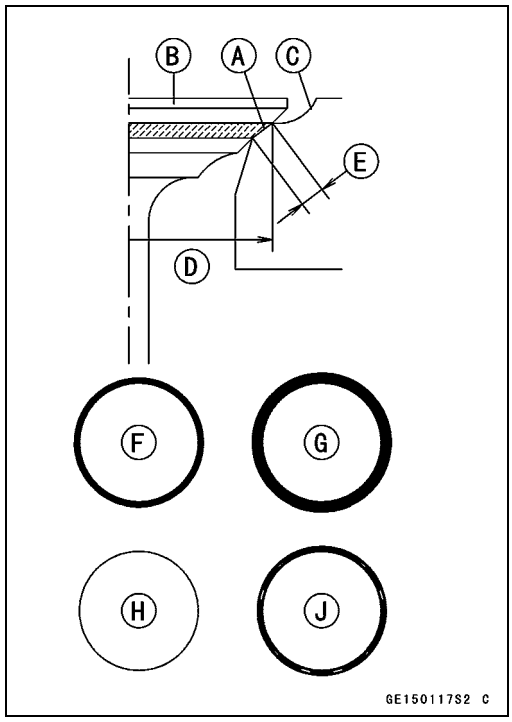

Valve Seat Repair

- Repair the valve seat with the valve seat cutters [A].

Special Tools - Valve Seat Cutter Holder, ϕ7: 57001-1126 [B]
Valve Seat Cutter Holder Bar: 57001-1128 [C]

[For Exhaust Valve Seat]
Valve Seat Cutter, 45° - ϕ32: 57001-1115
Valve Seat Cutter, 32° - ϕ35: 57001-1121 (or -1199)
Valve Seat Cutter, 55° - ϕ35: 57001-1247

[For Inlet Valve Seat]
Valve Seat Cutter, 45° - ϕ35: 57001-1116
Valve Seat Cutter, 32° - ϕ35: 57001-1121 (or -1199)
Valve Seat Cutter, 55° - ϕ35: 57001-1247

★If the manufacturer's instructions are not available, use the following procedure.

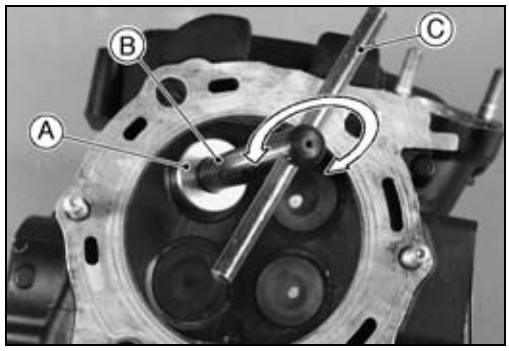

Downloaded from www.vulcanriders-sweden.org

Valves

Seat Cutter Operation Care

1. This valve seat cutter is developed to grind the valve for repair. Therefore the cutter must not be used for other purposes than seat repair.
2. Do not drop or shock the valve seat cutter, or the diamond particles may fall off.
3. Do not fail to apply engine oil to the valve seat cutter before grinding the seat surface. Also wash off ground particles sticking to the cutter with washing oil.

CAUTION

Do not use a wire brush to remove the metal particles from the cutter. It will take off the diamond particles.

Setting the valve seat cutter holder in position, operate the cutter in one hand. Do not apply too much force to the diamond portion.

NOTE

○*Prior to grinding, apply engine oil to the cutter. During operation, wash off any ground particles sticking to the cutter with washing oil.*

After use, wash it with washing oil and apply thin layer of engine oil before storing.

Marks Stamped on the Cutter

The marks stamped on the back of the cutter [A] represent the following.

55° ..... Cutter Angle [B]

37.5ϕ ..... Outer Diameter of Cutter [C]

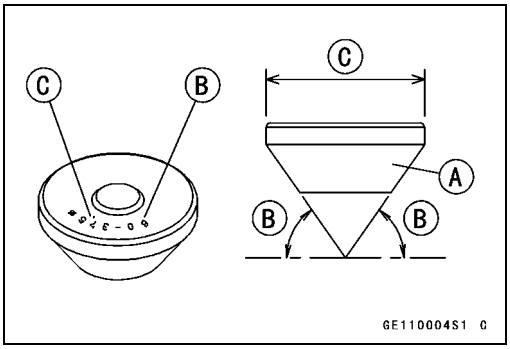

Operating Procedures

- Clean the seat area carefully.
- Coat the seat with machinist's dye.
- Fit a 45° cutter into the holder and slide it into the valve guide.
- Press down lightly on the handle and turn it right or left. Grind the seating surface only until it is smooth.

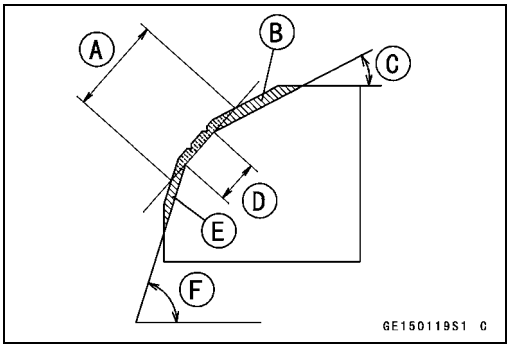

CAUTION

Do not grind the seat too much. Overgrinding will sink the valve into the head. If the valve sinks too far into the head, it will make HLA operation useless, and the cylinder head must be replaced.

Widened Width [A] of engagement by machining with 45° cutter
Ground Volume [B] by 32° cutter
32° [C]
Correct Width [D]
Ground Volume [E] by 55° cutter
55° [F]

Downloaded from www.vulcanriders-sweden.org

Valves

● Measure the outside diameter of the seating surface with vernier calipers.

★If the outside diameter of the seating surface is too small, repeat the 45° grind [A] until the diameter is within the specified range.

Original Seating Surface [B]

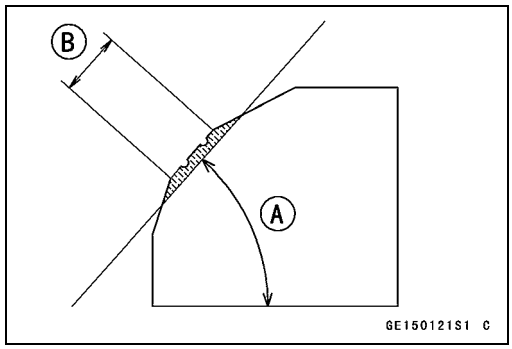

NOTE

○*Remove all pittings or flaws from 45° ground surface.*

○*After grinding with 45° cutter, apply thin coat of machinist's dye to seating surface. This makes seating surface distinct and 32° and 55° grinding operation easier.*

○*When the valve guide is replaced, be sure to grind with 45° cutter for centering and good contact.*

★If the outside diameter of the seating surface is too large, make the 32° grind described below.

★If the outside diameter [A] of the seating surface is within the specified range, measure the seat width as described below.

● Grind the seat at a 32° angle [B] until the seat outside diameter is within the specified range.

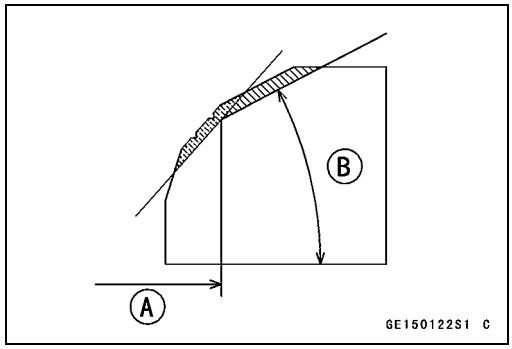

○To make the 32° grind, fit a 32° cutter into the holder, and slide it into the valve guide.

○Turn the holder one turn at a time while pressing down very lightly. Check the seat after each turn.

CAUTION

The 32° cutter removes material very quickly. Check the seat outside diameter frequently to prevent overgrinding.

○After making the 32° grind, return to the seat outside diameter measurement step above.

● To measure the seat width, use a vernier caliper to measure the width of the 45° angle portion of the seat at several places around the seat.

★If the seat width is too narrow, repeat the 45° grind until the seat is slightly too wide, and then return to the seat outside diameter measurement step above.

★If the seat width is too wide, make the 55° grind described below.

★If the seat width is within the specified range, lap the valve to the seat as described below.

● Grind the seat at a 55° angle [A] until the seat width is within the specified range.

○To make the 55° grind, fit 55° cutter into the holder, and slide it into the valve guide.

○Turn the holder, while pressing down lightly.

○After making the 55° grind, return to the seat width measurement step above.

Correct Width [B]

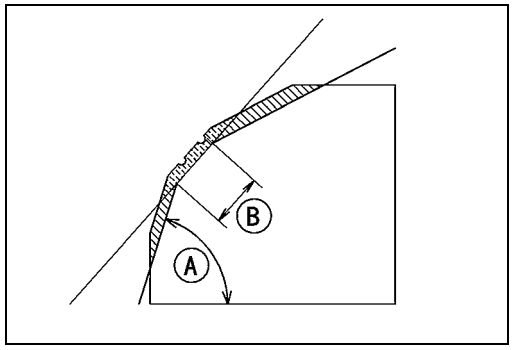

Downloaded from www.vulcanriders-sweden.org

Valves

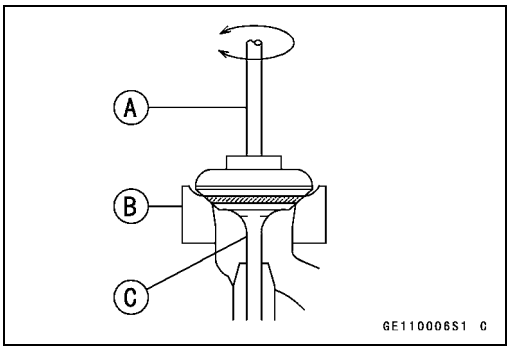

- Lap the valve to the seat, once the seat width and outside diameter are within the ranges specified above.

○Put a little coarse grinding compound on the face of the valve in a number of places around the valve head.

○Spin the valve against the seat until the grinding compound produces a smooth, matched surface on both the seat and the valve.

○Repeat the process with a fine grinding compound.

Lapper [A]
Valve Seat [B]
Valve [C]

- The seating area should be marked about in the middle of the valve face.

★If the seat area is not in the right place in the valve, check to be sure the valve is the correct part. If it is, it may have been refaced too much; replace it.

- Be sure to remove all grinding compound before assembly.

Downloaded from www.vulcanriders-sweden.org

Valves

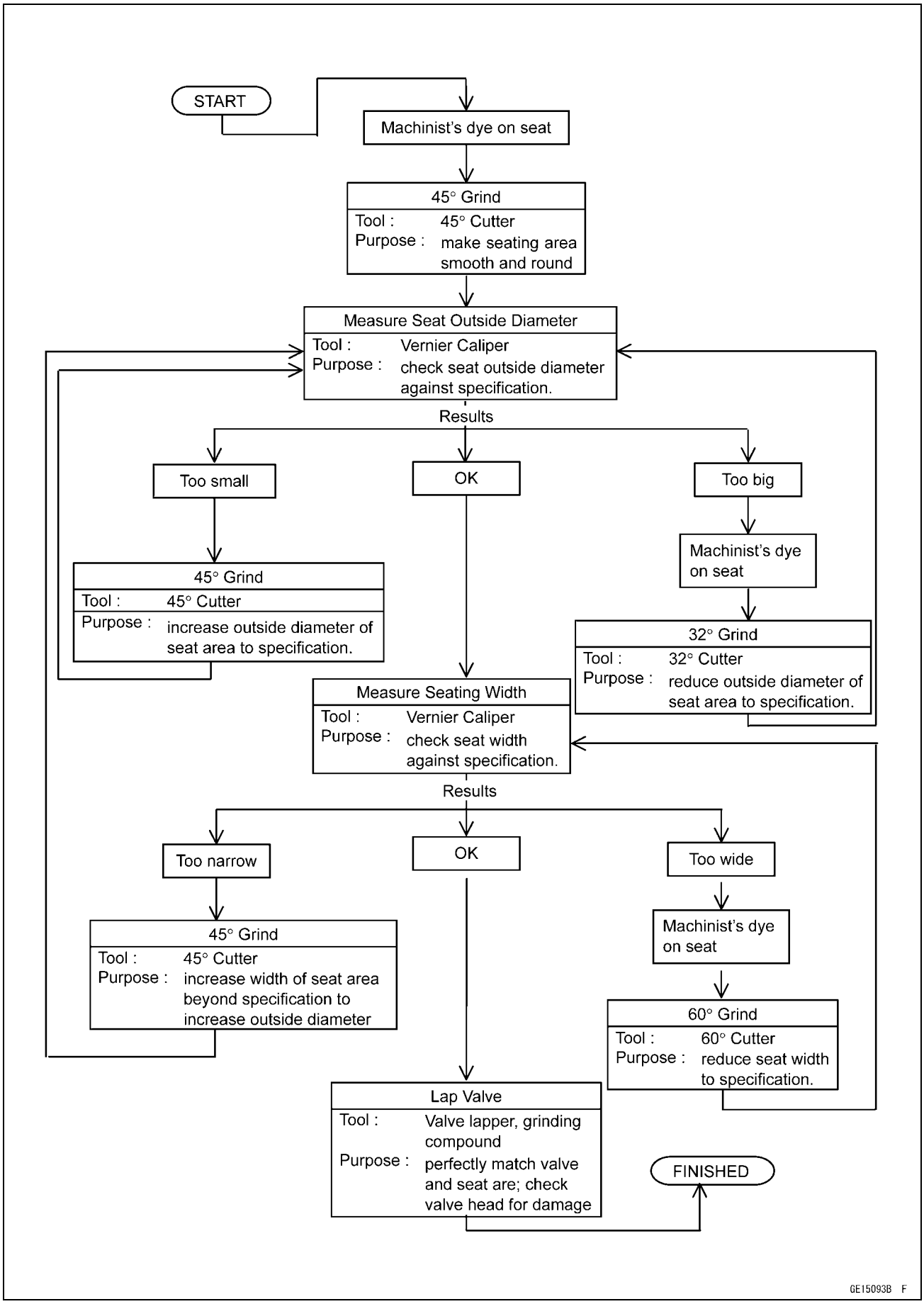

Downloaded from www.vulcanriders-sweden.org

Cylinders, Piston

Cylinder Removal

- Remove the cylinder head (see Cylinder Head Removal).
- Pull out the front camshaft chain guide [A].
- Remove the cylinder nuts [B].
- Tap lightly up the cylinder with a plastic mallet to separate from the crankcase.
- Remove the cylinder base gasket.

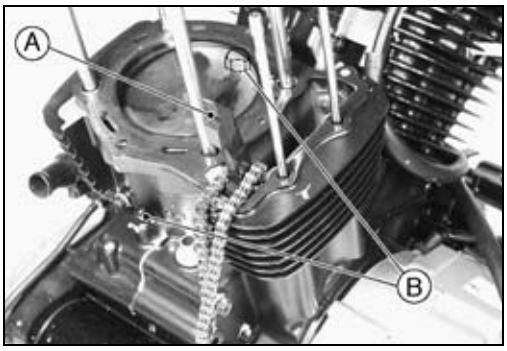

Piston Removal

- Remove the cylinder block (see Cylinder Removal).
- Place a piece of clean cloth under the piston and remove the piston pin snap rings [A] from the outside of each piston.

CAUTION

Do not reuse snap rings, as removal weakens and deforms them. They could fall out and score the cylinder wall.

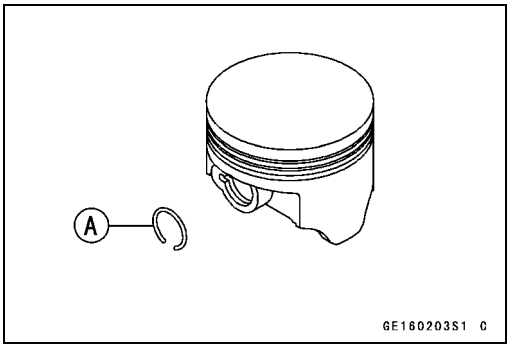

- Using the piston pin puller assembly (special tool), remove the piston pins.

Special Tools - Piston Pin Puller Assembly [A]: 57001-910
Piston Pin Puller Adapter, ϕ14 [B]: 57001 -1211

- Remove the piston.

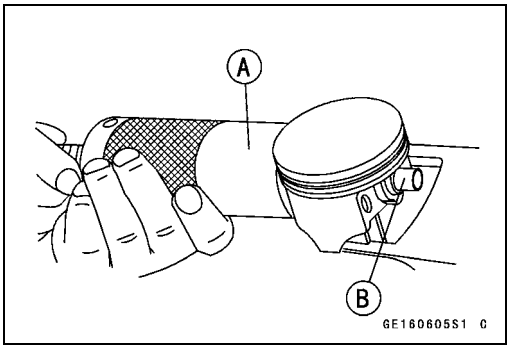

- Carefully spread the ring opening with your thumbs and then push up on the opposite side of the ring [A] to remove it.
- Remove the 3-piece oil ring with your thumbs in the same manner.

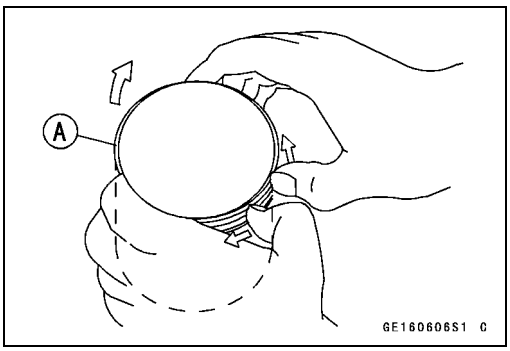

Cylinder, Piston Installation

NOTE

○*If a new piston or cylinder is used, check piston to cylinder clearance (see Piston/Cylinder Clearance), and use new piston ring.*

- Replace the cylinder base gasket [A] with a new one, and install the gaskets aligning the holes with the crankcase water passages [B].
- Be sure to install the dowel pins [C].

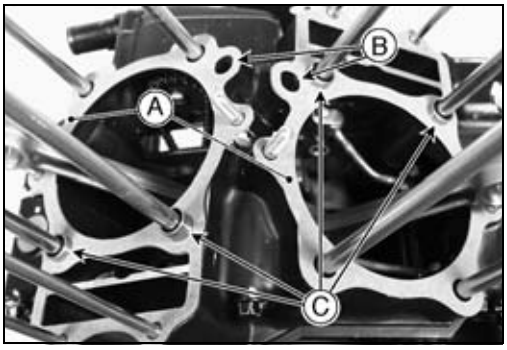

Downloaded from www.vulcanriders-sweden.org

Cylinders, Piston

○The front chain guide for the front cylinder has an **F** mark [A] and the front chain guide for the rear cylinder has an **R** mark [B]. Be careful not to mix up these chain guides since the front chain guide for the rear cylinder is longer.

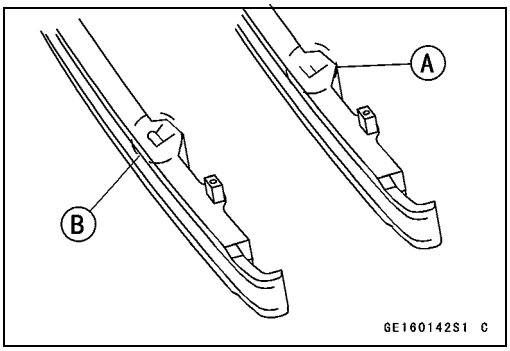

○The front cylinder [A] has an **F** mark and the rear cylinder [B] has an **R** mark. Be careful not to mix them up.
Front [C]

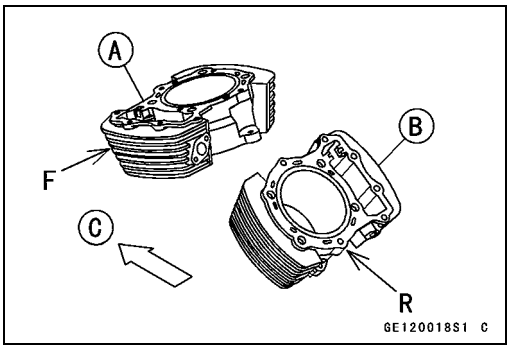

NOTE

○*The oil ring rails have no "top" or "bottom".*

- Install the oil ring expander [A] in the bottom piston ring groove so the ends [B] butt together.
- Install the oil ring steel rails, one above the expander and one below it.

○Spread the rail with your thumbs, but only enough to fit the rail over the piston.
○Release the rail into the bottom piston ring groove.

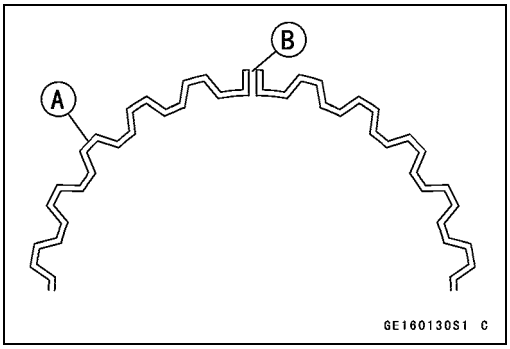

- Do not mix up the top ring and second ring.
- Install the top ring [A] so that the "**R**" mark [B] faces up.
- Install the second ring [C] so that the "**RN**" mark [D] faces up.

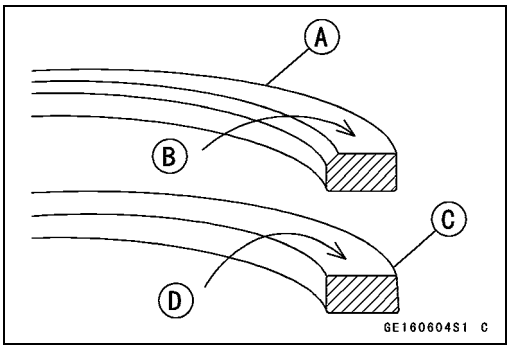

- The piston ring openings must be positioned as shown in the figure. The openings of the oil ring steel rails must be about 30 ~ 45° [F] of angle from the opening of the top ring.
  Top Ring [A]
  Second Ring [B]
  Oil Ring Steel Rails [C]
  Oil Ring Expander [D]
  Arrow mark [E] must be faced toward Exhaust Side
  Opening Positions [G]

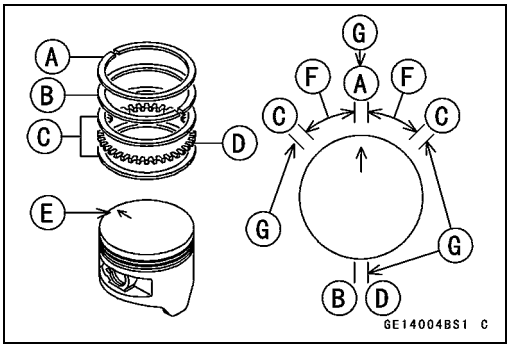

Downloaded from www.vulcanriders-sweden.org

Cylinders, Piston

● Face the “Arrow“ mark [A] on each piston toward the exhaust side [B].
○The front and rear pistons are the same.
Front [C]

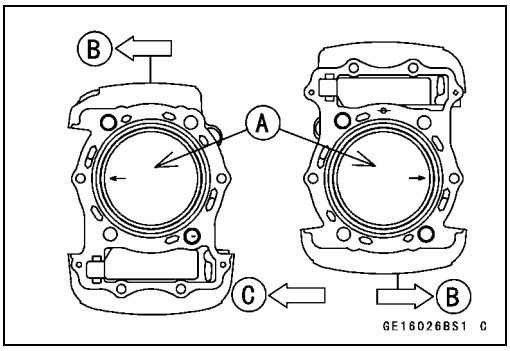

CAUTION

Incorrect installation of the piston could cause piston seizure and result in severe engine damage.

CAUTION

Whenever the new piston with an arrow mark on the top of piston is assembled, it must be installed so that the arrow mark shall direct toward the front.

● Fit a new piston pin snap ring into the side of the piston so that the ring opening [A] does not coincide with the slit [B] of the piston pin hole.
● Apply molybdenum disulfide oil to the outer surface of the piston pin.
○When installing the piston pin snap ring, compress it only enough to install it and no more.
● Apply engine oil to the cylinder bore and, piston rings.
● Apply molybdenum disulfide oil to the front and rear of the piston skirt.
● Install the rear cylinder first, with the rear piston at TDC.

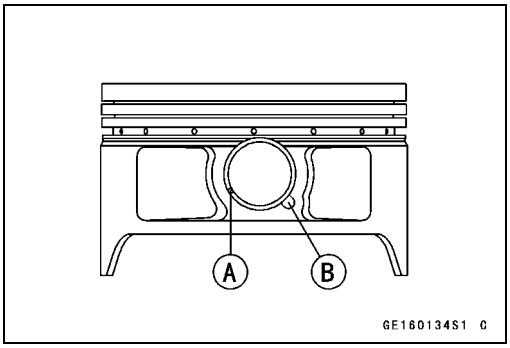

● Using the piston ring compressor assembly [A] with the chamfered side [B] upward, install the cylinder block [C].

Special Tools - Piston Ring Compressor Grip: 57001-1095
Piston Ring Compressor Belt, ϕ95 ~ ϕ108: 57001-1358

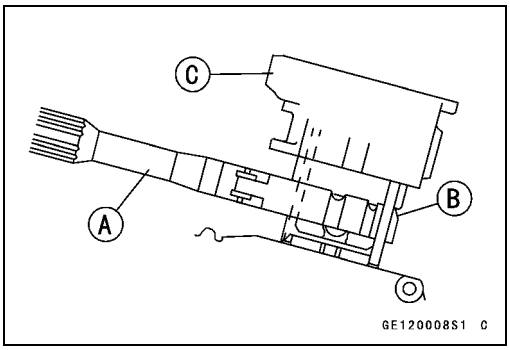

● Install the front cylinder in the same way.
○Position the front piston at TDC.
○Tighten the cylinder nuts temporarily (These nuts are tightened to the specified torque after rocker case installation).

Cylinder Wear Inspection

● Since there is a difference in cylinder wear in different directions, take a side-to-side and a front-to-back measurement at each of the three locations (total of six measurements) shown in the figure.
★If any of the cylinder inside diameter measurements exceeds the service limit, replace the cylinder.
10 mm (0.39 in.) [A]
70 mm (2.76 in.) [B]
20 mm (0.79 in.) [C]

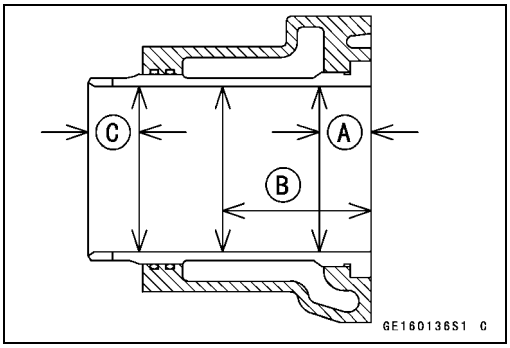

Cylinder Inside Diameter

Standard:	**102.000 ~ 102.012 mm (4.0157 ~ 4.0162 in.), and less than 0.01 mm (0.0004 in.) difference between any two measurements.**
Service Limit:	**102.10 mm (4.020 in.), or more than 0.05 mm (0.0020 in.) difference between any two measurements.**

Downloaded from www.vulcanriders-sweden.org

Cylinders, Piston

Piston Wear Inspection

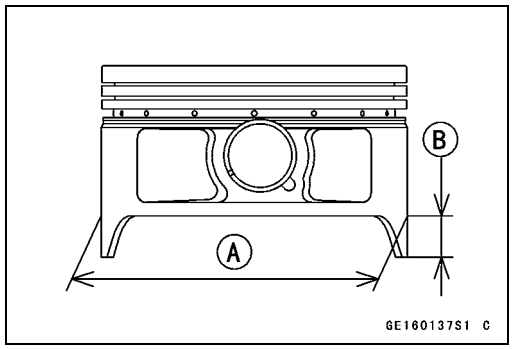

- Measure the outside diameter [A] of each piston 5 mm (0.20 in.) [B] up from the bottom of the piston at a right angle to the direction of the piston pin.

★If the measurement is under service limit, replace the piston.

Piston Diameter
Standard: 101.942 ~ 101.957 mm (4.0135 ~ 4.0140 in.)
Service Limit: 101.79 mm (4.007 in.)

Piston/Cylinder Clearance Inspection

- Subtract the piston diameter from the cylinder inside diameter to get the piston/cylinder clearance.

Piston/Cylinder Clearance
Standard: 0.043 ~ 0.070 mm (0.0017 ~ 0.0028 in.)

★If the piston/cylinder clearance is less than the specified range, use a smaller piston or increase the cylinder inside diameter by honing.

★If the piston/cylinder clearance is greater than specified range, use a larger piston.

★If only a piston is replaced, the clearance may exceed the standard slightly. But it must not to be less than the minimum in order to avoid piston seizure.

Cylinder Boring and Honing

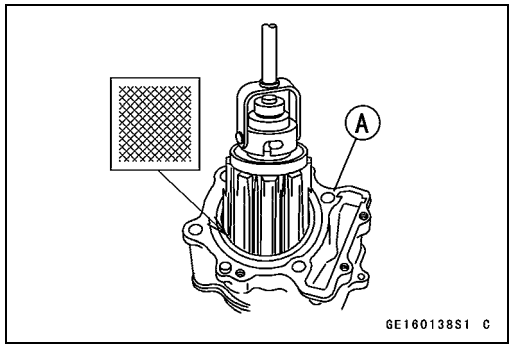

○There is an oversize piston available. The oversize piston requires oversize rings.

Oversize Piston and Rings
0.5 mm (0.02 in.) Oversize

- Before boring a cylinder [A], first measure the exact diameter of the oversize piston, and then, according to the standard clearance in the Specifications, determine the rebore diameter. However, if the amount of boring necessary would make the inside diameter greater than **0.5 mm (0.02 in.)**, the cylinder block must be replaced.

○Cylinder inside diameter must not vary more than **0.01 mm (0.0004 in.)** at any point.

○Be wary of measurements taken immediately after boring since the heat affects cylinder diameter.

○In the case of rebored cylinder and oversize piston, the service limit for the cylinder is the diameter that the cylinder was bored to plus **0.1 mm (0.004 in.)** and the service limit for the piston is the oversize piston original diameter minus **0.15 mm (0.006 in.)**. If the exact figure for the rebored diameter is unknown, it can be roughly determined by measuring the diameter at the base of the cylinder.

Downloaded from www.vulcanriders-sweden.org

Cylinders, Piston

Piston Ring, Piston Ring Groove Wear Inspection

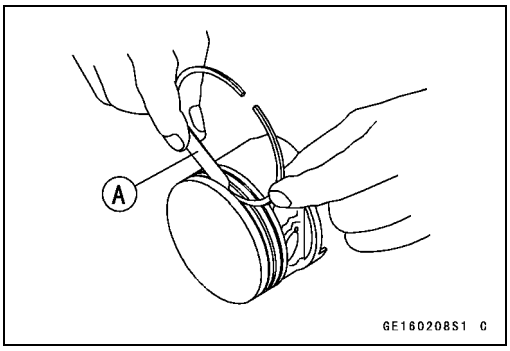

- Check for uneven groove wear by inspecting the ring seating.

★The rings should fit perfectly parallel to groove surfaces. If not, replace the piston and all the piston rings.

- With the piston rings in their grooves, make several measurements with a thickness gauge [A] to determine piston ring/groove clearance.

Piston Ring/Groove Clearance
Standard:

Top	**0.035 ~ 0.070 mm (0.0014 ~ 0.0028 in.)**
Second	**0.02 ~ 0.06 mm (0.0008 ~ 0.0024 in.)**

Service Limit:

Top	**0.17 mm (0.0067 in.)**
Top	**0.16 mm (0.0063 in.)**

★If the piston ring groove clearance is greater than the service limit, measure the ring thickness and groove width as follows to decide whether to replace the rings, the piston or both.

Piston Ring Groove Width Inspection

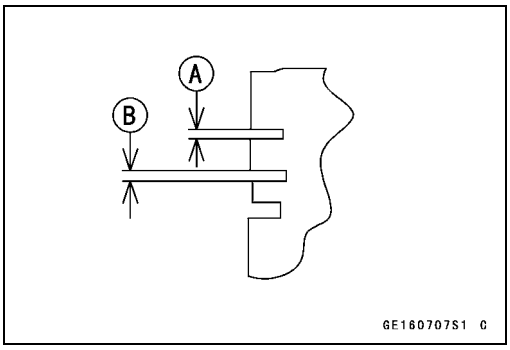

- Measure the width of the top [A] and second [B] ring grooves.

○Use vernier calipers at several points around the piston.

Piston Ring Groove Width
Standard:

Top	**1.025 ~ 1.040 mm (0.0404 ~ 0.0409 in.)**
Second	**1.21 ~ 1.23 mm (0.0476 ~ 0.0484 in.)**

Service Limit:

Top	**1.12 mm (0.0441 in.)**
Second	**1.31 mm (0.0516 in.)**

★If the width of any of the two grooves is wider than the service limit at any point, replace the piston.

Piston Ring Thickness Inspection

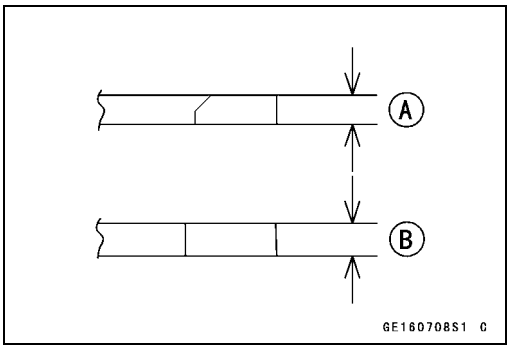

- Measure the thickness of the top [A] and second [B] rings.

○Use a micrometer to measure at several points around the ring.

Piston Ring Thickness
Standard:

Top	**0.97 ~ 0.99 mm (0.0382 ~ 0.0390 in.)**
Second	**1.17 ~ 1.19 mm (0.0461 ~ 0.0469 in.)**

Service Limit:

Top	**0.9 mm (0.0354 in.)**
Second	**1.10 mm (0.0433 in.)**

★If any of the measurements is less than the service limit on either of the rings, replace all the rings.

NOTE

○*When using new rings in a used piston, check for uneven groove wear. The rings should fit perfectly parallel to the groove sides. If not, replace the piston.*

Downloaded from www.vulcanriders-sweden.org

Cylinders, Piston

Piston Ring End Gap Inspection

- Place the piston ring [A] inside the cylinder, using the piston to locate the ring squarely in place. Set it close to the bottom of the cylinder, where cylinder wear is low.
- Measure the gap [B] between the ends of the ring with a thickness gauge.

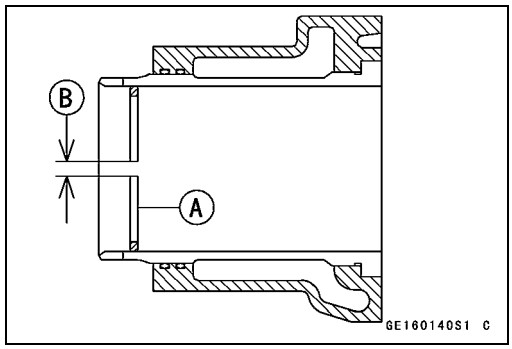

Piston Ring End Gap

Standard:

Top	**0.30 ~ 0.40 mm (0.0118 ~ 0.0157 in.)**
Second	**0.40 ~ 0.55 mm (0.0157 ~ 0.0217 in.)**
Oil	**0.3 ~ 0.9 mm (0.0118 ~ 0.0354 in.)**

Service Limit:

Top	**0.7 mm (0.0276 in.)**
Second	**0.8 mm (0.0335 in.)**
Oil	**1.2 mm (0.0472 in.)**

★If the end gap of either ring is greater than the service limit, replace all the rings.

Downloaded from www.vulcanriders-sweden.org

Mufflers

⚠ WARNING

To avoid a serious burn, do not remove the muffler when the engine is still hot. Wait until the muffler cools down.

Exhaust Pipe Removal

- Loosen the clamp screws [A].
- Detach the upper clamps [B] by sliding them up or forward.
- Detach the lower clamp [C] by sliding it forward.
- Remove the front exhaust pipe cover [D] and then lower front exhaust pipe cover [E].

  Front [F]

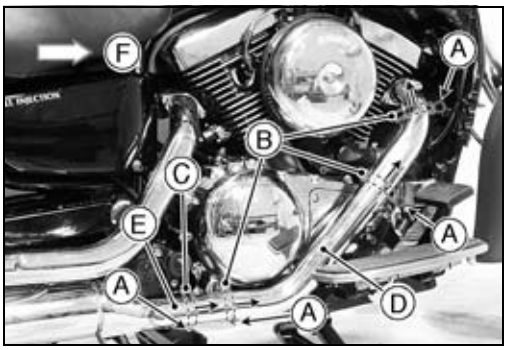

- Loosen the front exhaust pipe clamp bolt [A].
- Remove the front exhaust pipe holder nuts [B].
- Take off the front exhaust pipe [C].



○Next, remove the rear exhaust pipe.

- Loosen the clamp screws [A] on the rear exhaust pipe cover [B].
- Detach the upper clamp [C] by sliding it up.
- Detach the lower clamp [D] by sliding it back.
- Remove the rear exhaust pipe cover [E].

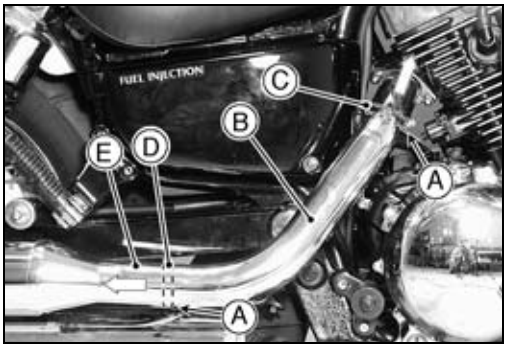

- Remove the rear exhaust pipe holder nuts [A].
- Loosen the rear exhaust pipe clamp bolt [B].
- Pull the upper end of the rear exhaust pipe outward and twist clockwise a little, and then take off the rear exhaust pipe [C].

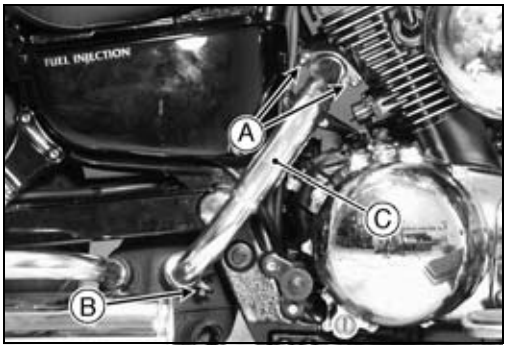

Downloaded from www.vulcanriders-sweden.org

Mufflers

Lower Muffler Body Removal

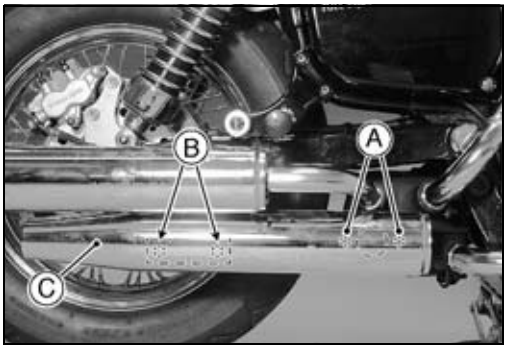

- Remove:
  Front and Rear Exhaust Pipe Covers (see above)
  Chamber Flange Nuts [A]
  Muffler Body Bracket Bolts [B]
- Remove the lower muffler body [C].

NOTE

○*If the chamber flange nuts are difficult to remove, spray a penetrating oil on the studs and nuts.*

Upper Muffler Body Removal



- Remove:
  Lower Muffler Body (see above)
  Muffler Pipe Clamp Bolt [A]
  Upper Muffler Body Bracket Bolt [B]
- Remove the upper muffler body [C].

Muffler, Exhaust Pipe Installation



- Replace the exhaust pipe holder gasket with new ones.
- Fit the two plastic tabs [A] of the front exhaust cover into the slots in the lower muffler body [B].

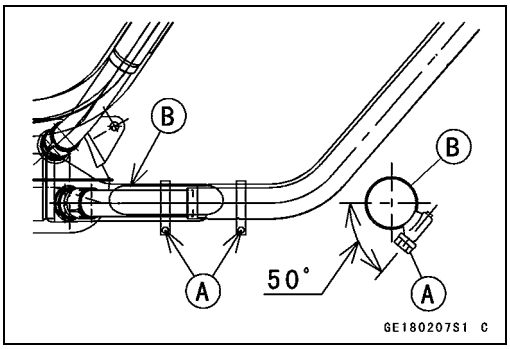

- Tighten the front exhaust pipe cover clamp screws [A] with its head inclined at 50° or less to horizontal as shown. This prevents the screw from touching ground when banking.
  Front Exhaust Pipe [B]

  Torque - Exhaust Pipe Cover Clamp Screws: 6.9 N·m (0.70 kgf·m, 61 in·lb)
- First, tighten all the bolts and nuts to a snug fit.
- Secondary, tighten the exhaust pipe holder nuts evenly.
- Finally, tighten the rest of the mounting bolts and clamp bolts securely.
- Thoroughly warm up the engine, wait until the engine cools down, and retighten all the clamp bolts.

Downloaded from www.vulcanriders-sweden.org

Mufflers

Chamber Removal

- Remove:
  Front Exhaust Pipe [A]
  Rear Exhaust Pipe [B]
  Lower and Upper Mufflers [C]
  Right and Left Chamber Bolts [D]
- Take out the premuffler chamber [E].
  Front [F]

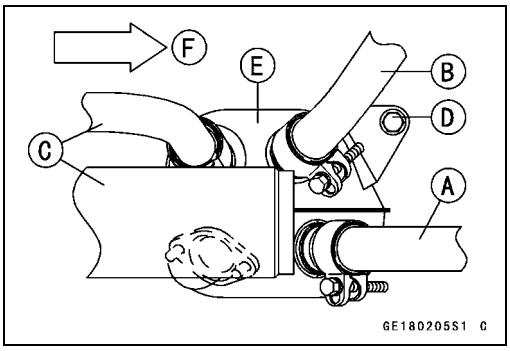

Chamber Installation

- Replace the muffler flange gasket with new ones.
- Install the exhaust pipe and muffler pipe clamps [A] with its bolt downward.
  Front [B]

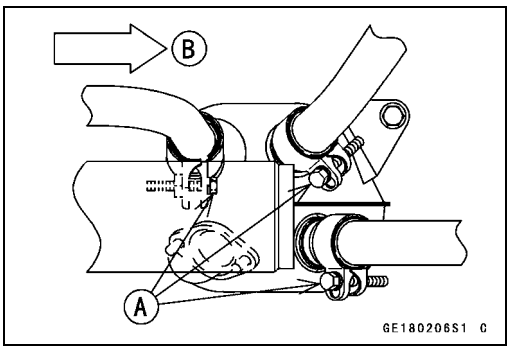

Chamber Assembly

- Apply a soap and water solution or rubber lubricant to the surface of the rubber bushings and install them into the brackets of the chamber as shown (Top View).
  Rubber Bushings [A] (ϕ24.8 mm) with a raised ring [B]
  Rubber Bushings [C] (ϕ25.3 mm) without raised ring

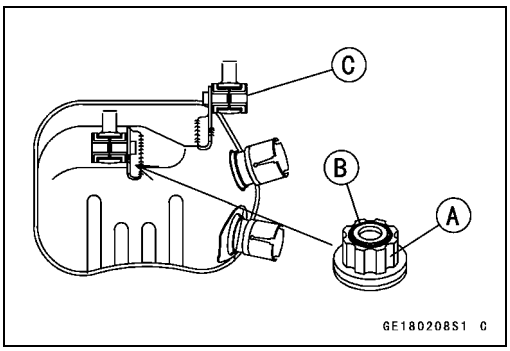

Chamber Identification

○The Australian models have a premuffler chamber (Identification No. KHI M 073 on the bottom) without any catalytic converter.

○The other models have a premuffler chamber (Identification No. KHI M 069) with a honeycomb type catalytic converter and without any catalyst protection system. Do not mix up this chamber with the other type chamber (especially with a non-catalyst chamber). The motorcycle could not clear the emission regulation.
  → : Exhaust Gas Flow
  Premuffler Chamber [A]
  Honeycomb Type Catalytic Converter [B]
  Inlet [C] from Rear Exhaust Pipe
  Inlet [D] from Front Exhaust Pipe
  Premuffler Chamber Outlet [E]

○Refer to the VN1500 G/H Service Manual (Part No. 99924-1241) for more information about the KLEEN (theory, maintenance, and handling precautions), including the secondary air injection system.

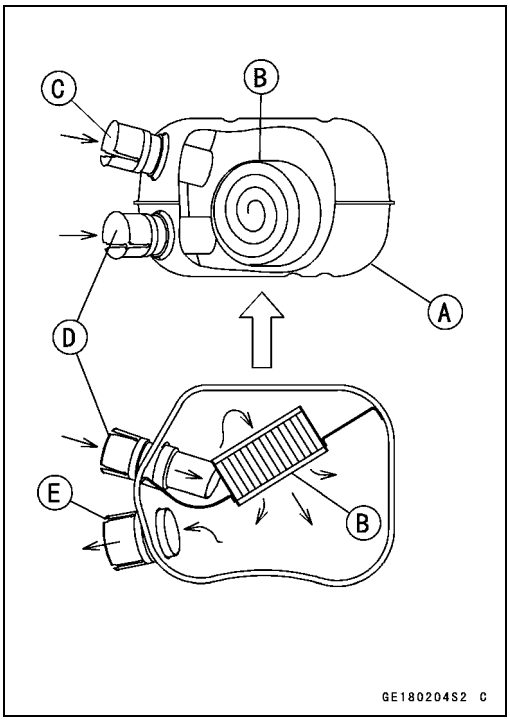

Downloaded from www.vulcanriders-sweden.org

Clutch

Table of Contents

Exploded View 5-2
Specifications 5-3
Clutch Lever 5-4
  Position Adjustment 5-4
Clutch Fluid 5-5
  Fluid Level Inspection 5-5
  Clutch Fluid Changing 5-5
  Clutch Line Bleeding 5-6
Clutch Master Cylinder 5-7
  Clutch Master Cylinder Removal 5-7
  Clutch Master Cylinder Installation 5-7
  Clutch Master Cylinder Disassembly 5-8
  Clutch Master Cylinder Assembly 5-8
  Clutch Master Cylinder Inspection 5-9
Clutch Slave Cylinder 5-10
  Removal 5-10
  Installation 5-10
  Disassembly 5-11
  Assembly 5-11
Clutch 5-12
  Clutch Cover Removal 5-12
  Clutch Removal 5-12
  Clutch Installation 5-13
  Inner Clutch Hub Disassembly 5-14
  Spring Plate Free Play Measurement (VN1500-N1 ~ N3) 5-15
  Spring Plate Gap Measurement (VN1500-N4 ~) 5-16
  Spring Plate Free Play/Gap Adjustment 5-17
  Friction and Steel Plate Wear, and Damage Inspection 5-17
  Friction or Steel Plate Warp Inspection 5-18
  Clutch Spring Height Measurement 5-18
  Clutch Housing Finger Inspection 5-18
  Outer Clutch Hub Spline Inspection 5-18
  Cam Damper Inspection 5-19

Downloaded from www.vulcanriders-sweden.org

Exploded View

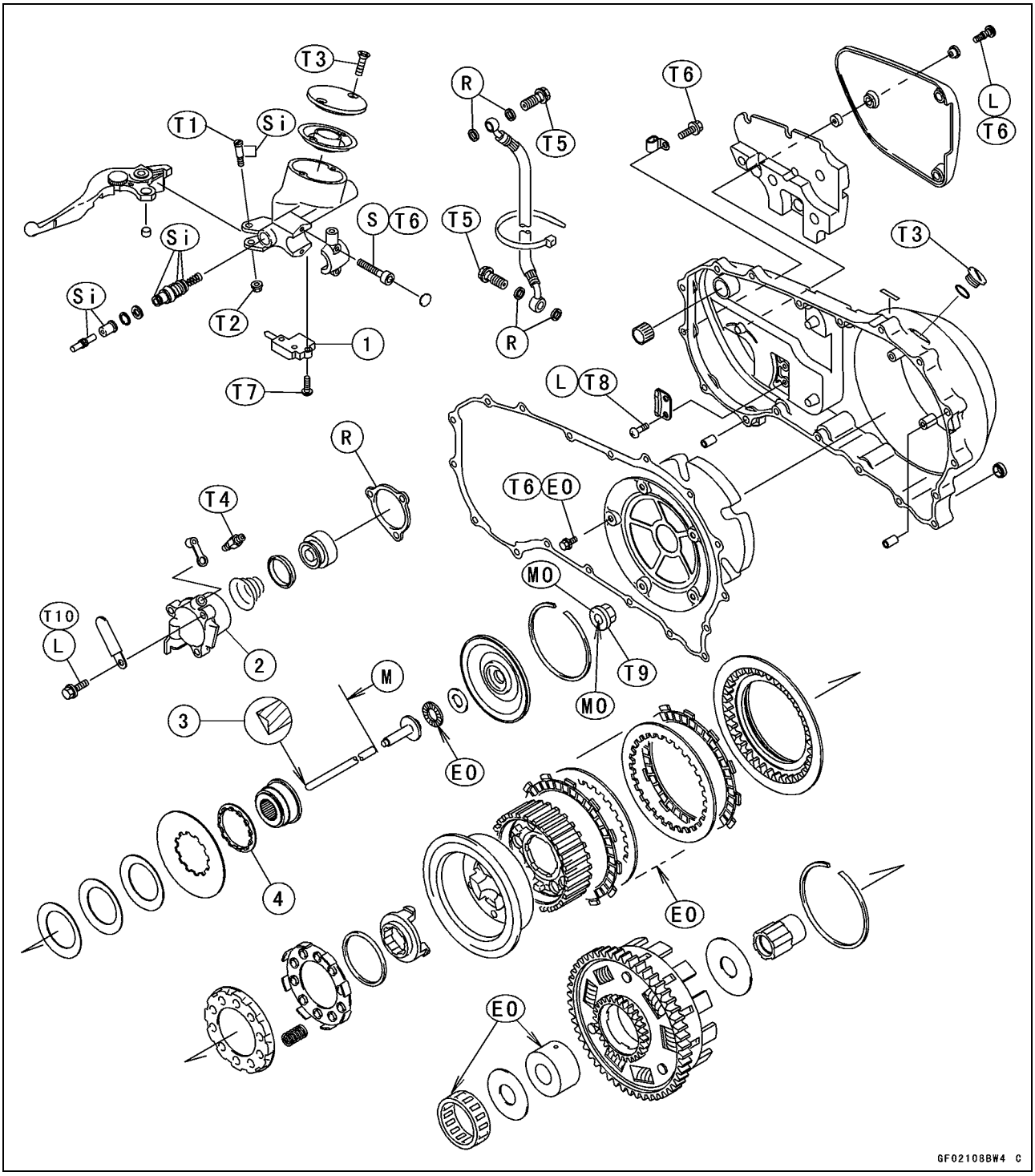

1. Starter Lockout Switch
2. Clutch Slave Cylinder
3. Cup point side faces outside.
4. Clutch Spring Holder (VN1500-N4 ~)

T1: 1.0 N·m (0.10 kgf·m, 8.7 in·lb)
T2: 5.9 N·m (0.60 kgf·m, 52 in·lb)
T3: 1.5 N·m (0.15 kgf·m, 13 in·lb)
T4: 7.8 N·m (0.80 kgf·m, 69 in·lb)
T5: 25 N·m (2.5 kgf·m, 18 ft·lb)
T6: 9.8 N·m (1.0 kgf·m, 87 in·lb)
T7: 1.2 N·m (0.12 kgf·m, 10 in·lb)
T8: 4.9 N·m (0.50 kgf·m, 43 in·lb)
T9: 147 N·m (15.0 kgf·m, 108 ft·lb)
T10: 6.9 N·m (0.70 kgf·m, 61 in·lb)

EO: Apply engine oil.
L: Apply a non-permanent locking agent.
M: Apply molybdenum disulfide grease.
MO: Apply molybdenum disulfide oil.
The molybdenum disulfide oil is a mixture of engine oil and molybdenum desulfide grease with a weight ratio (10 : 1).
R: Replacement Parts
S: Follow the specific tightening sequence.
Si: Apply silicone grease, or PBC grease.

Downloaded from www.vulcanriders-sweden.org

Specifications

Item	Standard	Service Limit
Clutch Fluid		
Grade	DOT 4 (provided when shipping)	– – –
Clutch Lever Position	No. 1 (to suit rider)	5-way adjustable
Clutch Lever Free Play	Non-adjustable	– – –
Clutch		
Clutch Spring Free Height		
(VN1500-N1 ~ N4, N6F/T6F)	4.3 mm (0.169 in.)	4.0 mm (0.16 in.)
(VN1500N7F ~)	4.4 mm (0.173 in.)	4.1 mm (0.16 in.)
Spring Plate Free Play		
(VN1500-N1 ~ N3)	0.30 ~ 1.30 mm (0.012 ~ 0.051 in.)	– – –
Spring Plate Gap (VN1500-N4 ~)	1.95 ~ 2.45 mm (0.0768 ~ 0.0965 in.)	– – –
Friction Plate Thickness	3.3 ~ 3.5 mm (0.130 ~ 0.138 in.)	3.1 mm (0.122 in.)
Friction or Steel Plate Warp	0.2 mm (0.0079 in.) or less	0.3 mm (0.012 in.)

Special Tools - Inside Circlip Pliers: 57001-143
Bearing Driver Set: 57001-1129

Downloaded from www.vulcanriders-sweden.org

Clutch Lever

The adjuster has 5 positions so that the clutch lever position can be adjusted to suit the operator's hand.

Position Adjustment

- Push the lever forward and turn the adjuster [A] to align the number with the arrow mark [B] on the lever holder (front view).

○The distance from the grip to the lever is minimum at number 5 and maximum at number 1.

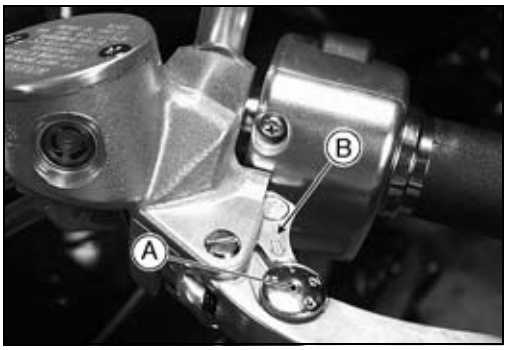

Downloaded from www.vulcanriders-sweden.org

Clutch Fluid

Fluid Level Inspection

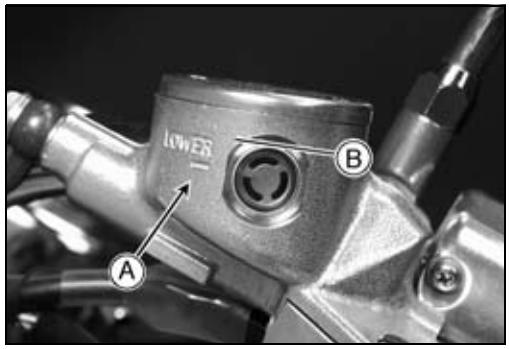

- Hold the reservoir horizontal.
- Check that the brake fluid level of the clutch reservoir is between the lower [A] and the upper [B] level lines.

★If the fluid level is lower than the lower level line, fill the reservoir to the upper level line in the reservoir.

○Since the clutch fluid is the same as the brake fluid, refer to Brake Fluid Section in the Brakes chapter for further details.

- Tighten:

Torque - Clutch Reservoir Cap Screws: 1.5 N·m (0.15 kgf·m, 13 in·lb)

⚠ WARNING

Change the fluid in the clutch line completely if the fluid must be refilled but the type and brand of the fluid that already is in the reservoir are unidentified. After changing the fluid, use only the same type and brand of fluid thereafter. Mixing different types and brands of fluid lowers the fluid boiling point and could cause the clutch to be ineffective. It may also cause the rubber clutch parts to deteriorate.

Clutch Fluid Changing

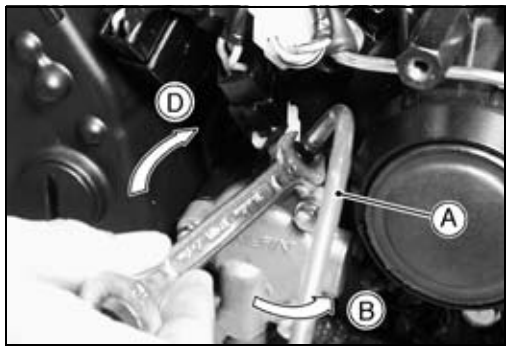

- Level the clutch fluid reservoir and remove the reservoir cap.
- Remove the alternator outer cover and the rubber cap from the bleed valve on the clutch slave cylinder.
- Attach a clear plastic hose [A] to the bleed valve and run the other end of the hose into a container.
- Fill the reservoir with fresh fluid.
- Change the clutch fluid as follows.

  Open [B] the bleed valve, using a wrench.
  Pump the clutch lever and hold [C] it.
  Close [D] the bleed valve.
  Release [E] the clutch lever.

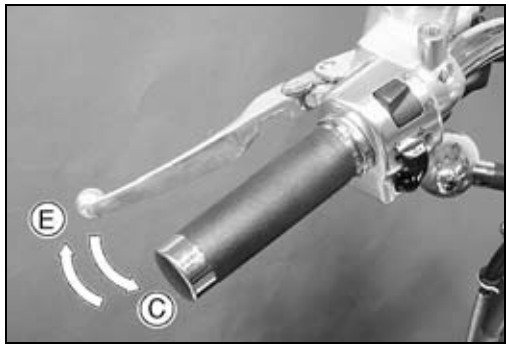

○Repeat this operation until fresh fluid comes out from the plastic hose or the color of the fluid changes.

○Check the fluid level in the reservoir often, replenishing it as necessary.

NOTE

○*If the fluid in the reservoir runs completely out any time during fluid changing, the bleeding operation must be done over again from the beginning since air will have entered the line.*

⚠ WARNING

Do not mix two brands of fluid.

Downloaded from www.vulcanriders-sweden.org

Clutch Fluid

- After changing the fluid, check the clutch for good clutch power and no fluid leakage.

★If necessary, bleed the air from the lines (see Clutch Line Bleeding).

- Remove the clear plastic hose.
- Install the reservoir cap.
- Tighten the bleed valve, and install the rubber cap.

Torque - Clutch Reservoir Cap Screws: 1.5 N·m (0.15 kgf·m, 13 in·lb)
Clutch Slave Cylinder Bleed Valve: 7.8 N·m (0.80 kgf·m, 69 in·lb)

Clutch Line Bleeding

- With the reservoir cap off, slowly pump the clutch lever several times until no air bubbles can be seen rising up through the fluid from the holes at the bottom of the reservoir. This bleeds the air from the master cylinder end of the line.



NOTE

○*Tap the clutch hose lightly going from the lower end to the upper end and bleed the air off at the reservoir.*

- Attach a clear plastic hose [A] to the bleed valve on the clutch slave cylinder, and run the other end of the hose into a container.

- Bleed the clutch line as follows:
  Pump the clutch lever a few times until it becomes hard and then hold it applied [B].
  Quickly open and close [C] the bleed valve.
  Release [D] the clutch lever.
  Check the fluid level in the reservoir often, replenishing it as necessary.

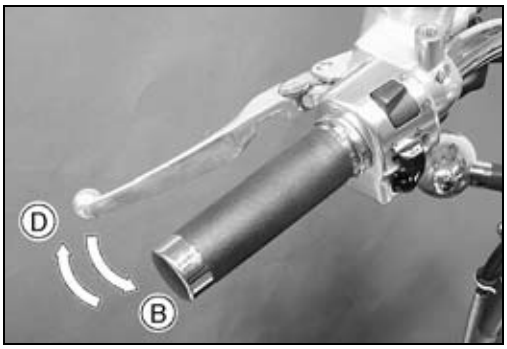

NOTE

○*If the fluid in the reservoir runs completely out any time during bleeding, the bleeding operation must be done over again from the beginning since air will have entered the line.*

○Repeat this operation until no more air can be seen coming out into the plastic hose.

⚠ WARNING

Do not mix two brands of fluid.

- Tighten:

Torque - Clutch Reservoir Cap Screws: 1.5 N·m (0.15 kgf·m, 13 in·lb)
Clutch Slave Cylinder Bleed Valve: 7.8 N·m (0.80 kgf·m, 69 in·lb)

Downloaded from www.vulcanriders-sweden.org

Clutch Master Cylinder

Clutch Master Cylinder Removal

- Disconnect the starter lockout switch connector [A] (front view).
- Draw out the clutch fluid from the reservoir with a means like the fork oil level gauge.

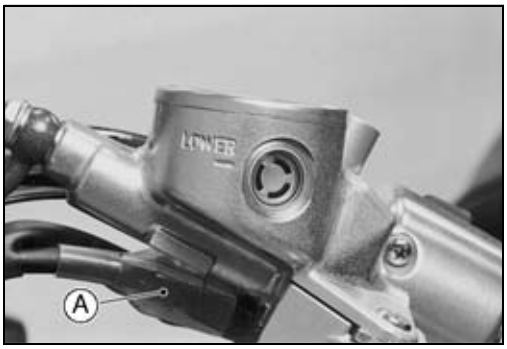

- Remove the banjo bolt [A] to disconnect the clutch hose from the master cylinder (rear view).
- Unscrew the clamp bolts [B], and take off the master cylinder [C] as an assembly with the clutch reservoir, clutch lever, and starter lockout switch installed.

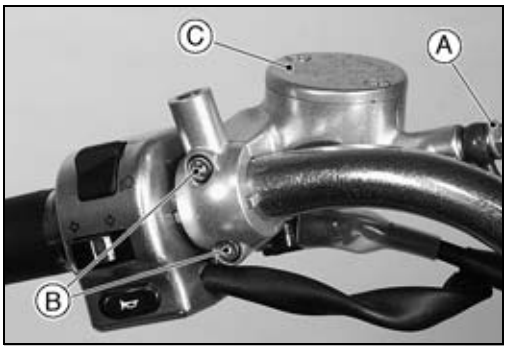

CAUTION

Clutch fluid quickly ruins painted surface; any spilled fluid should be completely washed away immediately.

Clutch Master Cylinder Installation

- Set the clutch master cylinder [A] to match its mating surface [B] to the punch mark [C] of the handlebar (rear view).

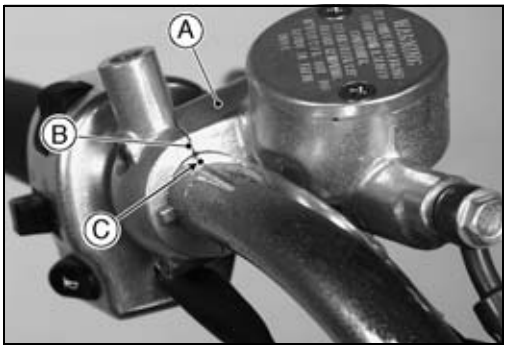

○The master cylinder clamp must be installed with the rear view mirror boss [A] upward.

- Tighten the upper clamp bolt [B] first, and then the lower clamp bolt [C]. There will be a gap at the lower part of the clamp after tightening.

Torque - Clutch Master Cylinder Clamp Bolts: 9.8 N·m (1.0 kgf·m, 87 in·lb)

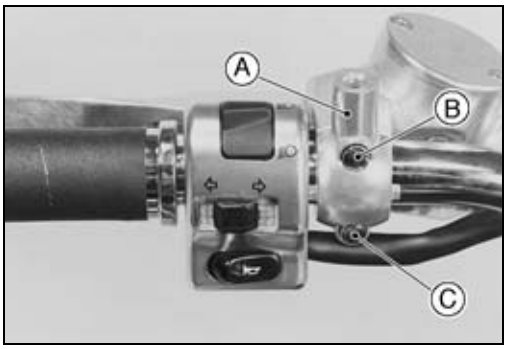

- Use a new flat washer on each side of the clutch hose fitting.
- Tighten the clutch hose banjo bolt.

Torque - Clutch Hose Banjo Bolt: 25 N·m (2.5 kgf·m, 18 ft·lb)

- Replenish the clutch fluid into the reservoir and bleed the clutch line (see Clutch Line Bleeding).
- Check that the clutch line has proper fluid pressure and no fluid leakage.

Downloaded from www.vulcanriders-sweden.org

Clutch Master Cylinder

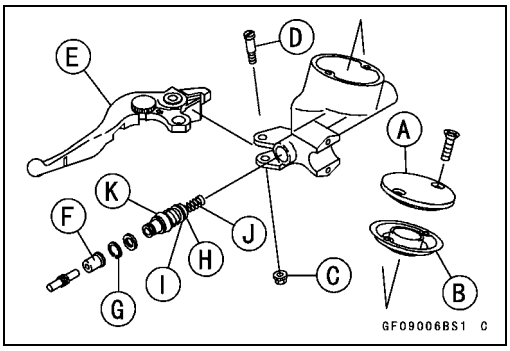

Clutch Master Cylinder Disassembly

- Remove the master cylinder.
- Remove the reservoir cap [A] and diaphragm [B], and pour the clutch fluid into a container.
- Unscrew the locknut [C] and pivot bolt [D], and remove the clutch lever [E].
- Pull the dust cover [F] out of place, and remove the circlip [G].

Special Tool - Inside Circlip Pliers: 57001-143

- Pull out the primary cup [H], piston assembly [I], and return spring [J].

CAUTION

Do not remove the secondary cup [K] from the piston since removal will damage it.

Clutch Master Cylinder Assembly

- Before assembly, clean all parts including the master cylinder with clutch fluid or alcohol.

CAUTION

Use only disc brake fluid, isopropyl alcohol, or ethyl alcohol, for cleaning parts. Do not use any other fluid for cleaning these parts. Gasoline, motor oil, or any other petroleum distilate will cause deterioration of the rubber parts. Oil spilled on any part will be difficult to wash off completely, and will eventually deteriorate the rubber used in the cylinder.

- Apply silicone grease to the parts removed and to the inner wall of the cylinder.
- Take care not to scratch the piston or the inner wall of the cylinder.
- Install the push rod with the dust seal fitted into the groove.

○The push rod round end must be faced inwards.

- Tighten:

Torque - Clutch Lever Pivot Bolt: 1.0 N·m (0.10 kgf·m, 8.7 in·lb)
Clutch Lever Pivot Bolt Locknut: 5.9 N·m (0.60 kgf·m, 52 in·lb)

- Install the clutch master cylinder (see this chapter).

Downloaded from www.vulcanriders-sweden.org

Clutch Master Cylinder

Clutch Master Cylinder Inspection

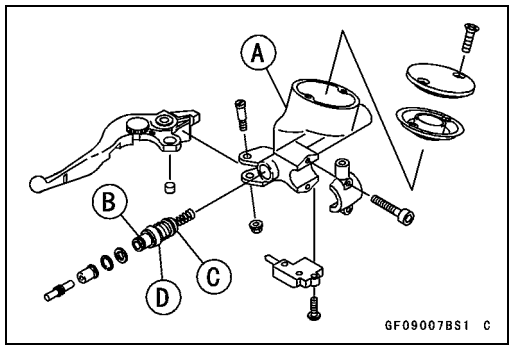

- Disassemble the clutch master cylinder.
- Check that there are no scratches, rust or pitting on the inside of the master cylinder [A] and on the outside of the piston [B].

★If the master cylinder or piston shows any damage, replace them.

- Inspect the primary cup [C] and secondary cup [D].

★If a cup is worn, damaged, softened (rotted), or swollen, the piston assembly should be replaced to renew the cups.

- If fluid leakage is noted at the clutch lever, the piston assembly should be replaced to renew the cups.
- Check the dust cover for damage.
- If it is damaged, replace it.

- Check that the relief and supply ports are not plugged.

★If the small relief port becomes plugged, the clutch will drag. Blow the ports clean with compressed air.

- Check the piston return spring for any damage.

★If the spring is damaged, replace it.

Downloaded from www.vulcanriders-sweden.org

Clutch Slave Cylinder

Removal

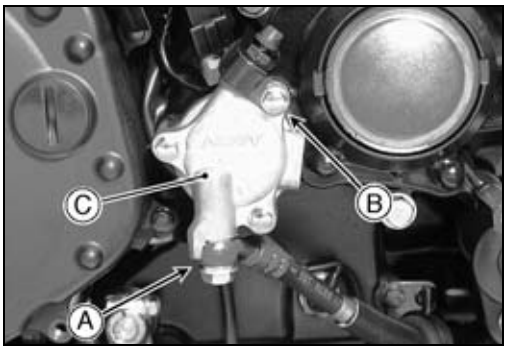

- Remove:
  Alternator Outer Cover (see Electrical System chapter)
  Banjo Bolt [A]
  Clutch Slave Cylinder Bolts [B]
  Slave Cylinder [C]

CAUTION

Immediately wash away any clutch fluid that spills. It may damage painted surfaces.

- Perform the following if the clutch slave cylinder is to be removed but not disassembled.

CAUTION

If the clutch slave cylinder is removed and left alone, the piston will be pushed out by spring force and the clutch fluid will drain out.

○Remove the clutch slave cylinder with the pipe installed.
○Push [A] the piston into the cylinder as far as it will go.

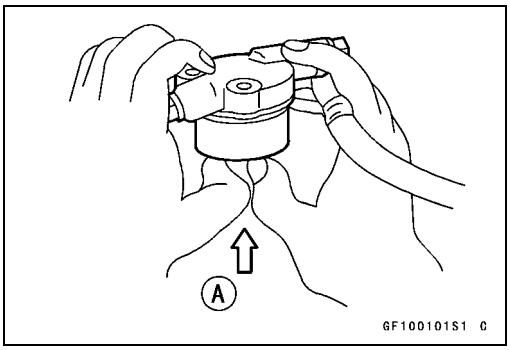

○Squeeze the clutch lever [A] slowly and hold it with a band [B].

NOTE

○*Holding the clutch lever keeps the piston from coming out.*

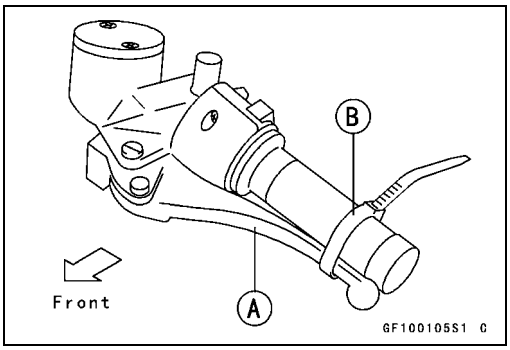

Installation

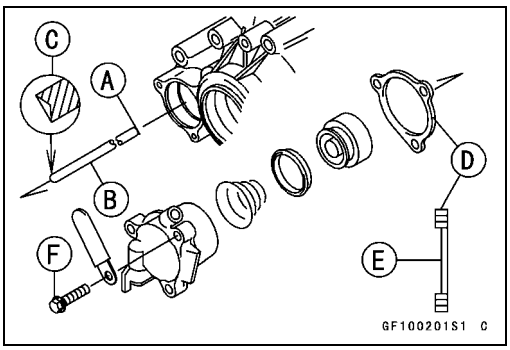

- Apply molybdenum disulfide grease to the flat end [A] of the push rod [B].
- Install the push rod so that the flat end faces in.
  Cup Point [C]
- Replace the spacer [D] of the clutch slave cylinder with a new one.
- Install the spacer so that the stepped side [E] faces outward.
- Apply a non-permanent locking agent to the threads of the clutch slave cylinder bolts [F].
- Finger tighten the clutch slave cylinder bolts.
- Remove the band from the clutch lever and release the clutch lever.

Downloaded from www.vulcanriders-sweden.org

Clutch Slave Cylinder

- Tighten the slave cylinder bolts [A].

Torque - Clutch Slave Cylinder Bolts: 6.9 N·m (0.70 kgf·m, 61 in·lb)

- Replace the washers on each side of the clutch hose fitting with new ones.
- Tighten the banjo bolt [B] to the specified torque.

Torque - Clutch Pipe Banjo Bolt: 25 N·m (2.5 kgf·m, 18 ft·lb)

- Check the fluid level in the master cylinder reservoir, and bleed the air in the clutch line.
- Check the clutch operation.

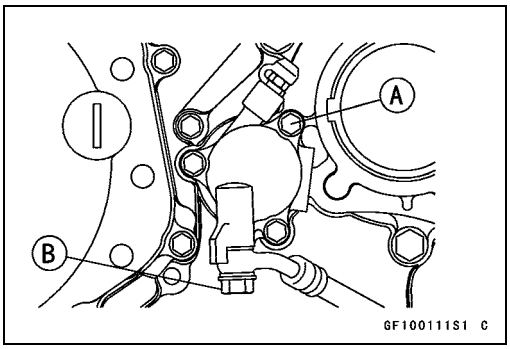

Disassembly

- Loosen the banjo bolt [A] at the clutch pipe lower end, and tighten it loosely.
- Unscrew the slave cylinder bolts [B] and detach the slave cylinder with the pipe installed from the engine.
- Pump the clutch lever until the piston comes out of the cylinder.
- Unscrew the banjo bolt and remove the slave cylinder [C].

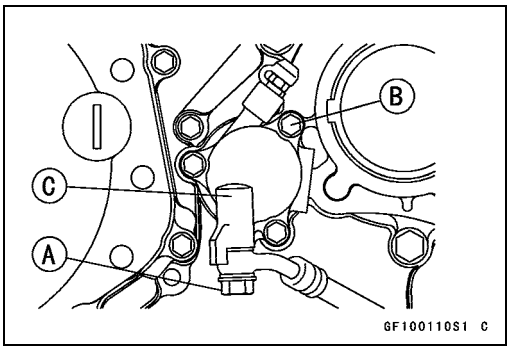

CAUTION

Immediately wash away any clutch fluid that spills. It may damage painted surfaces.

NOTE

○*If the clutch slave cylinder is removed and left alone, the piston will be pushed out by spring force.*

- Remove:
  Spring
  Fluid Seal

Assembly

CAUTION

Replace the fluid seal with a new one if it was removed from the piston.

- Apply clutch fluid to the outside of the piston and the fluid seal.
- Install the fluid seal as shown.
  Cylinder [A]
  Piston [B]
  Fluid Seal [C]
  Spring [D]

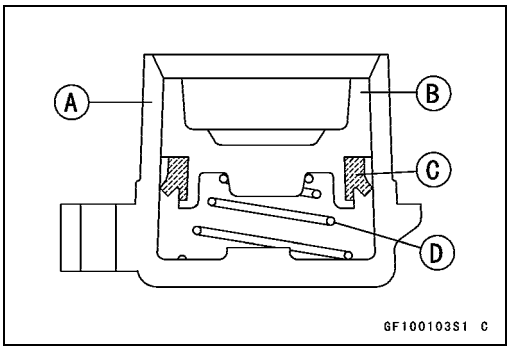

Downloaded from www.vulcanriders-sweden.org

Clutch

Clutch Cover Removal



- Drain the engine oil (see Engine Lubrication System chapter).
- Remove:
  Front Exhaust Pipe [A] (see Engine Top End chapter)
  Downtube [B] (see Frame chapter, but remove the downtube with the right footboard and rear master cylinder left installed)

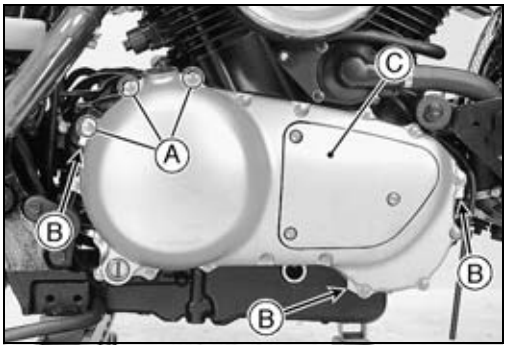

- Unscrew the eighteen cover bolts [A].
- Using the pry points [B], take the cover off the crankcase.

NOTE

○*Do not remove the damper cover [C].*

Clutch Removal

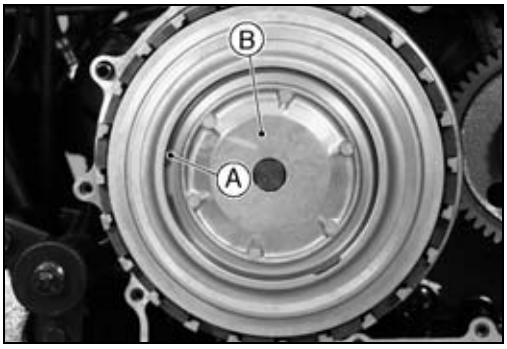

NOTE

○*Use an air impact wrench for removal of the clutch hub nut.*

- Remove the clutch cover (see this chapter).
- Remove the retaining ring [A] and take the operating plate [B] out of the clutch assembly.

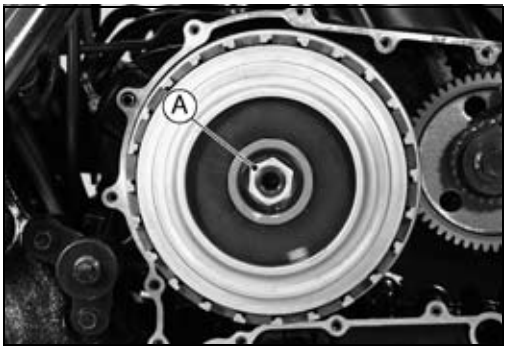

- Unscrew the clutch hub nut [A] by using an air impact wrench.

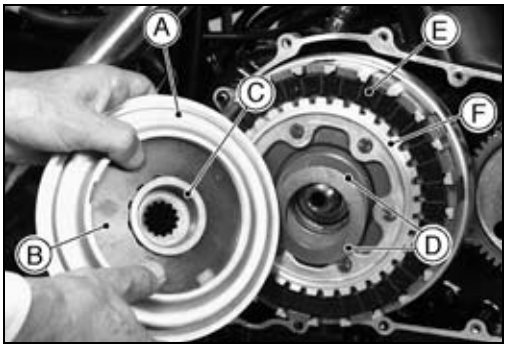

- Take the clutch spring plate [A], clutch spring [B], and the clutch spring holder [C] out of the clutch hub.
- Take the back torque limiter springs [D], friction/steel plates [E], and the outer clutch hub [F] out of the clutch housing.

Downloaded from www.vulcanriders-sweden.org

Clutch

● Take the inner clutch hub [A], collar [B], washer [C] and clutch housing [D] out of the crankcase.

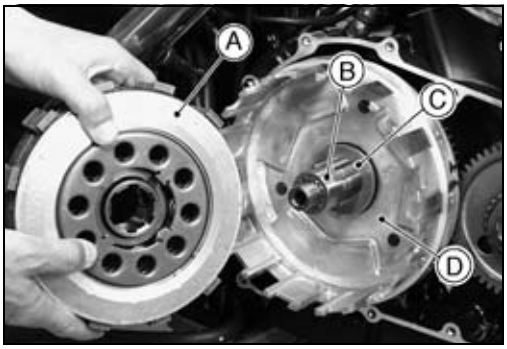

● Pull the needle bearing [A], sleeve [B], and thrust washer [C] off the drive shaft.

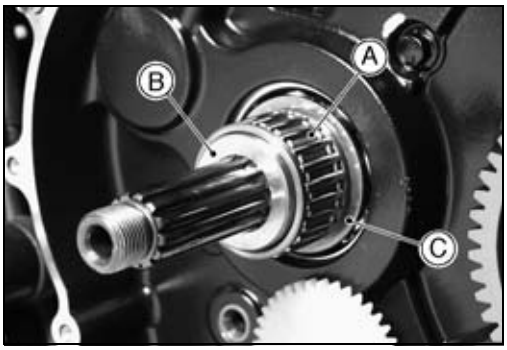

Clutch Installation

★When replacing any one of the following parts, check the spring plate free play (see Spring Plate Free Play Measurement).
Spring Plate [A]
Friction Plates [B]
Steel Plates [C]

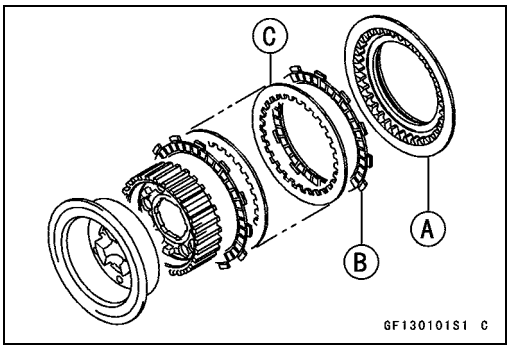

● Install:
Thrust Washer
Sleeve
Needle Bearing

● When installing the clutch housing, mesh the oil pump drive gear [A] with the oil pump gear [B] so that the pump gear turns smoothly.

● Install:
Washer
Collar
Inner Clutch Hub



CAUTION

If new dry steel or friction plates are installed, apply engine oil to the surfaces of each plate to avoid clutch plate seizure.

● Install the outer clutch hub.

● Install the friction plates and steel plates, starting with a friction plate and alternating them.

○First, install the friction plates, fitting their tangs in the deeper grooves [A], and finally the outermost friction plate [B] in the shallower grooves [C].

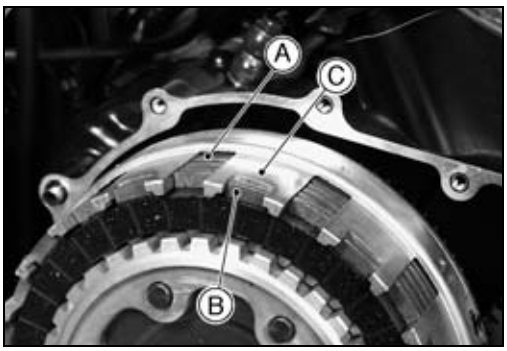

Downloaded from www.vulcanriders-sweden.org

Clutch

- Apply grease to the back torque limiter springs [A] and install them on the spring holder [B] as shown.
- Install:
  Clutch Spring Holder
  Clutch Spring
  Clutch Spring Plate

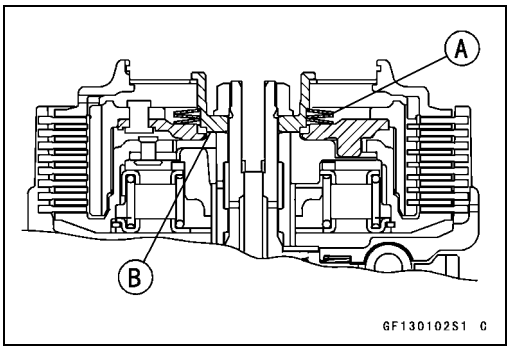

VN1500-N4 ~

- Install the clutch spring holder outer [A], clutch spring [B] and convex direction of outside [C] on the spring holder [D].

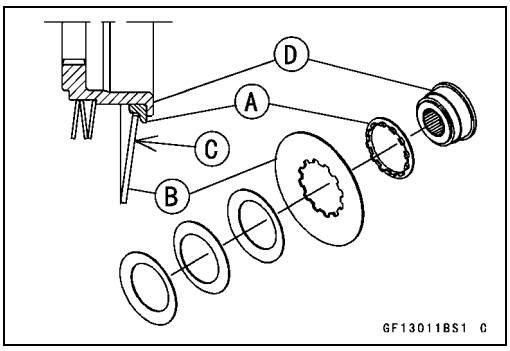

- Apply:

  Molybdenum Disulfide Oil- Threads and Seating Surface of Clutch Hub Nut

- Tighten the clutch hub nut [A] to the specified torque while holding the primary gear bolt [B].

  Torque - Clutch Hub Nut: 147 N·m (15.0 kgf·m, 108 ft·lb)

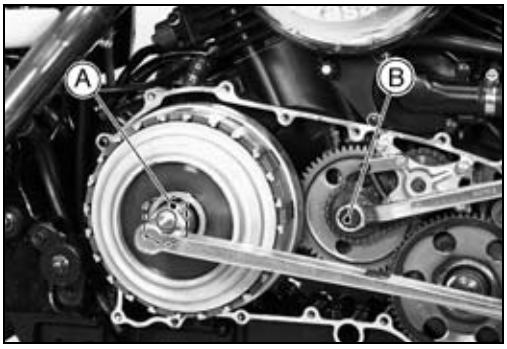

- Squeeze the clutch lever slowly and hold it with a band while pushing [A] the spring plate pusher [B] into the clutch hub.

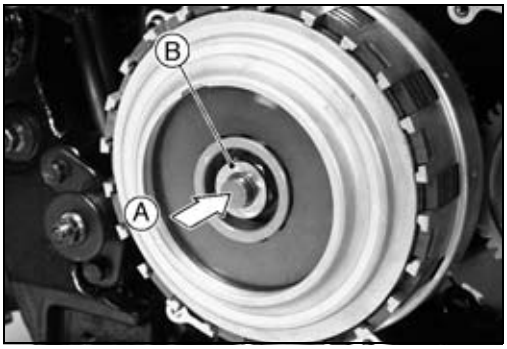

Inner Clutch Hub Disassembly

- Using a press [A], and a suitable bearing driver [B], push the damper spring holder [C] to remove the retaining ring [D].

  Special Tool - Bearing Driver Set: 57001-1129

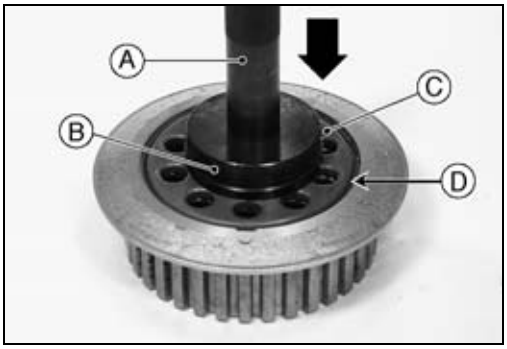

Downloaded from www.vulcanriders-sweden.org

Clutch

● Remove:
Retaining Ring [A]
Spring Holder [B]
Damper Spring [C]
Spring Holder [D]
Spacer [E]
Damper Cam [F]
Inner Clutch Hub [G]

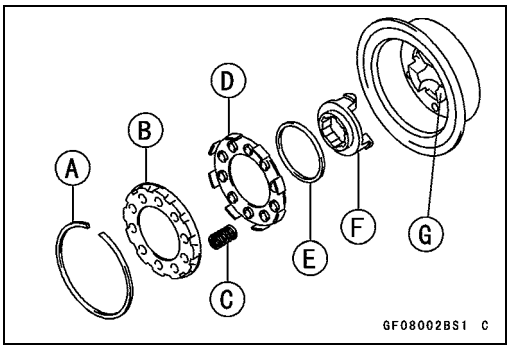

Spring Plate Free Play Measurement (VN1500-N1 ~ N3)

Insufficient spring plate free play will cause the engine braking effect to be more sudden, resulting in rear wheel hop. On the other hand, if the free play is excessive, the clutch may slip or the clutch lever may feel “spongy” or pulsate when pulled.

CAUTION

Take care not to damage the drive shaft.

● Hold an extra drive shaft [A] steady with a vise and install the clutch parts on an extra drive shaft.
○Do not install the back torque limiter springs [B] and the operating plate [G].
○Tighten the clutch hub nut [C] to about **29 N·m (3 kgf·m, 22 ft·lb)** of torque to seat the clutch plates closely.
● Unscrew the hub nut, then take the spring holder [E], operating plate, and the clutch spring [D] out of the housing.
○Reinstall the clutch spring plate [F].

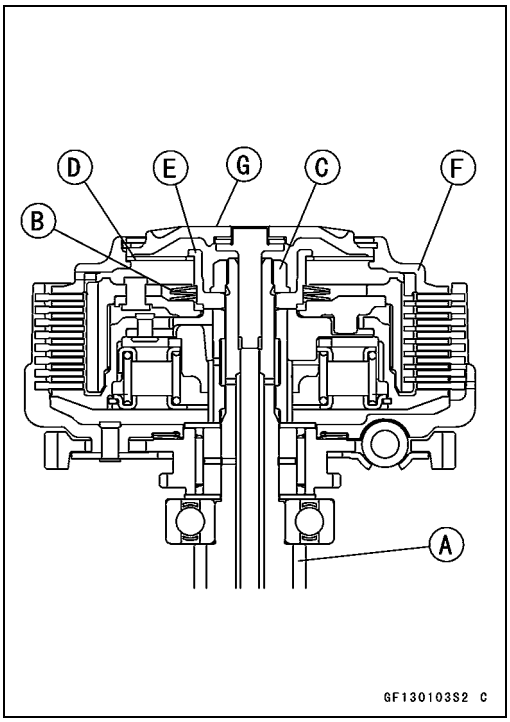

● Reinstall the spring holder [A] and tighten the hub nut [B] lightly.
● To measure the free play, install the dial gauge [D] against the clutch spring plate [C].
● Set the reading of the gauge “0”.
● Turn [E] the clutch housing right and left. The difference [F] between the highest and lowest gauge readings is the amount of free play.

Spring Plate Free Play
Usable Range: 0.30 ~ 1.30 mm (0.012 ~ 0.051 in.)

NOTE

○*In case of rear wheel hop, adjust the spring plate free play a bit larger, and in case of clutch slip, or “spongy” clutch lever, adjust the free play a bit smaller within the usable range.*

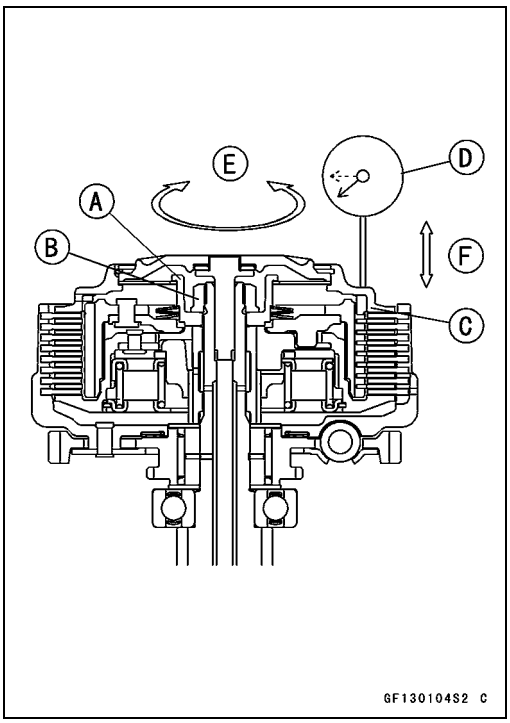

Downloaded from www.vulcanriders-sweden.org

Clutch

Spring Plate Gap Measurement (VN1500-N4 ~)

Insufficient spring plate gap will cause the engine braking effect to be more sudden, resulting in rear wheel hop. On the other hand, if the spring plate gap is excessive, the clutch may slip or the clutch lever may feel “spongy” or pulsate when pulled.

- Prepare sheet gum (chewing gum) or about 5 g (0.176 oz) clay [A].
- Make an about 2.5 mm (0.10 in.) thick sheet [B] of gum or clay, using a press and two thickness gauges [C] which are overlapped to about 2.5 mm (0.10 in.).
- Cut the sheet with scissors into four strips [D] of gum or clay as shown.
  [E]: 7 mm (0.276 in.)
  [F]: 4 mm (0.157 in.)

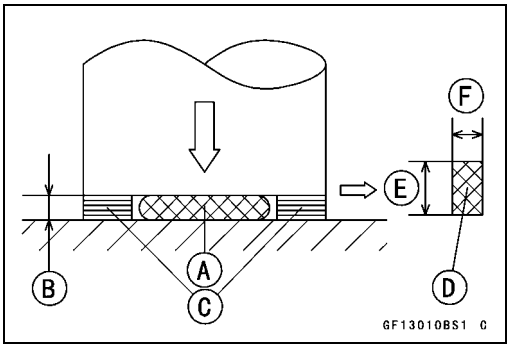

- Remove the clutch (see Clutch Removal).
- Place the inner clutch hub, spring holder assy [A], the outer clutch hub [B], and the clutch plates (friction and steel plates) [C] on blocks [D].

○Do not support the spring holder [E] with the blocks.

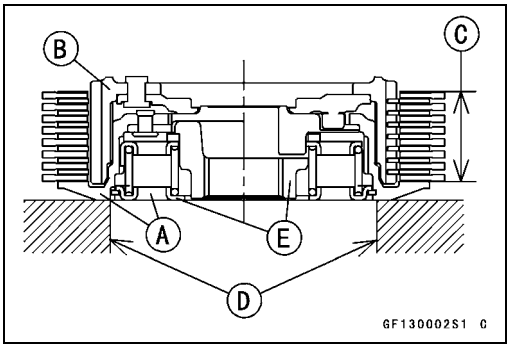

- Apply a soap and water solution to the strips. This is to separate the strips easily from the clutch spring plate and clutch hub when removing strips.
- Place these four strips [A] on the raised surface [B] of the outer clutch hub in a criss-cross pattern as shown.
- Install the clutch spring plate [C] and a block [D].

○While noting the positions of the spline teeth [E], fit the clutch spring plate into the outer clutch hub smoothly. Be careful not to move these strips.

- Press [F] the block until the clutch plates [G] seat closely.

CAUTION

Do not press the block too much. This could damage the clutch parts. The maximum press force is 100 kg.

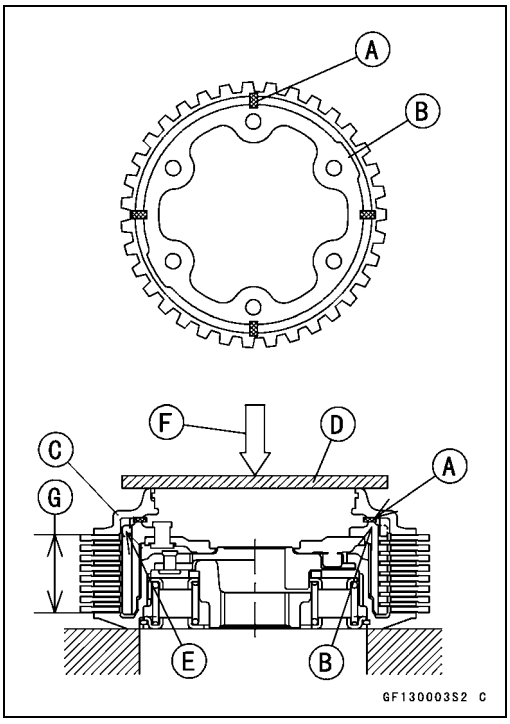

Downloaded from www.vulcanriders-sweden.org

Clutch

● Remove the clutch spring plate.
● Peel off these strips with a thin-bladed screwdriver.
● Measure the pressed thickness [A] of each strip with vernier calipers.
○The thickness represents the spring plate gap.

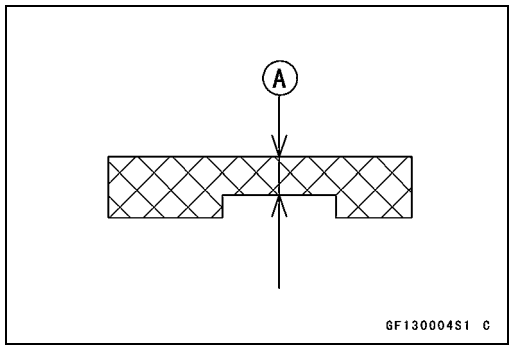

Spring Plate Gap
Usable Range: 1.95 ~ 2.45 mm (0.0768 ~ 0.0965 in.)

NOTE

○*In case of rear wheel hop, adjust the spring plate gap a bit larger, and in case of clutch slip or "spongy" clutch lever, adjust the gap a bit smaller within the usable range.*

Spring Plate Free Play/Gap Adjustment

★If the free play is not within the usable range, change one of the steel plates [A] to a thicker or thinner one to get the correct free play.
○Use the standard steel plates (2.0 mm thick) × 6 ~ 7 plates, and the adjustment steel plate (1.6 or 2.3 mm (0.063 ~ 0.090 in.) thick) × 0 ~ 1 plates: total 7 plates.

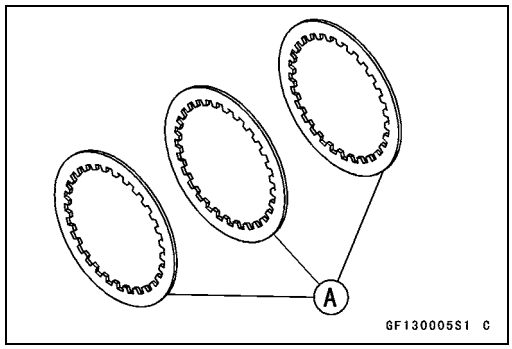

Steel Plates

Thickness	Part No.
1.6 mm (0.063 in.)	13089-1080
2.0 mm (0.079 in.)	13089-1075 (standard)
2.3 mm (0.090 in.)	13089-1081

CAUTION

If new friction or steel plates are installed, apply engine oil to the surfaces of each plate to avoid clutch plate seizure.

Friction and Steel Plate Wear, and Damage Inspection

● Visually inspect the friction and steel plates for signs of seizure, overheating (discoloration), or uneven wear.
● Measure the thickness of the friction plates [A] at several points.
★If any plates show signs of damage, or if they have worn past the service limit, measure the spring plate free play and adjust it if necessary.

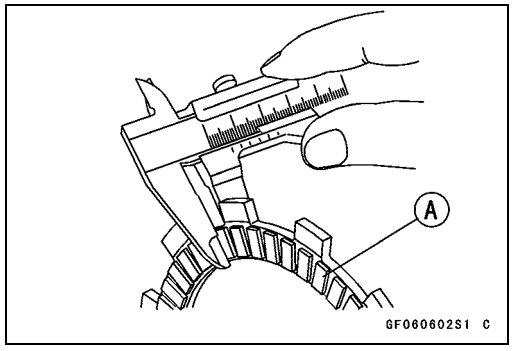

Friction Plate Thickness
Standard: 3.3 ~ 3.5 mm (0.130 ~ 0.138 in.)
Service Limit: 3.1 mm (0.122 in.)

Downloaded from www.vulcanriders-sweden.org

Clutch

Friction or Steel Plate Warp Inspection

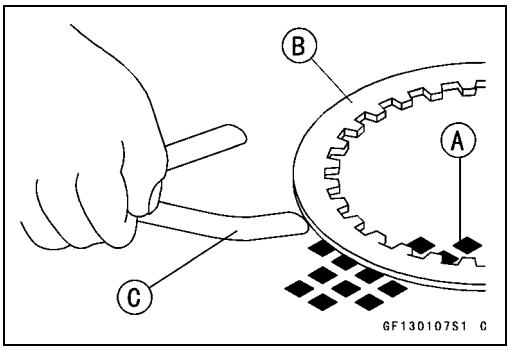

- Place each friction plate or steel plate on a surface plate, and measure the gap between the surface plate [A] and each friction plate or steel plate [B] with a thickness gauge [C]. The gap is the amount of friction or steel plate warp.

★If any plate is warped over the service limit, replace it and measure the spring plate free play, and adjust it if necessary.

Friction or Steel Plate Warp

Standard: 0.2 mm (0.0079 in.) or less

Service Limit: 0.3 mm (0.012 in.)

Clutch Spring Height Measurement

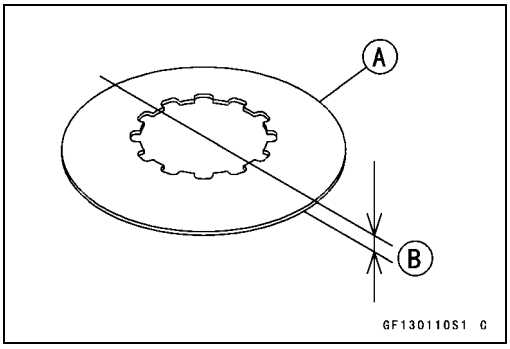

- Measure the height [B] of the clutch spring [A].

★If the spring height is less than the service limit, it must be replaced.

Clutch Spring Height

Standard: 4.3 mm (0.169 in.) (VN1500-N1 ~ N4, N6F/T6F)

4.4 mm (0.173 in.)

Service Limit: 4.0 mm (0.16 in.) (VN1500-N1 ~ N4, N6F/T6F)

4.1 mm (0.16 in.)

Clutch Housing Finger Inspection

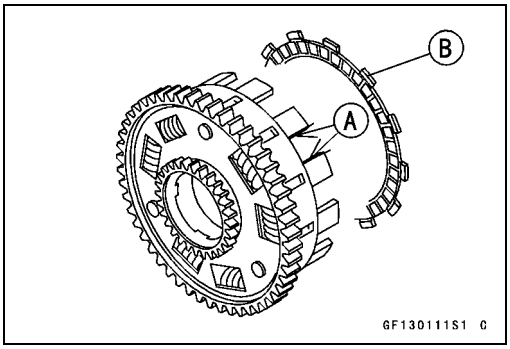

- Visually inspect the fingers [A] of the clutch housing where the tangs [B] of the friction plates hit them.

★If they are badly worn or if there are groove cuts where the tangs hit, replace the housing. Also, replace the friction plates if their tangs are damaged and measure the spring plate free play.

Outer Clutch Hub Spline Inspection

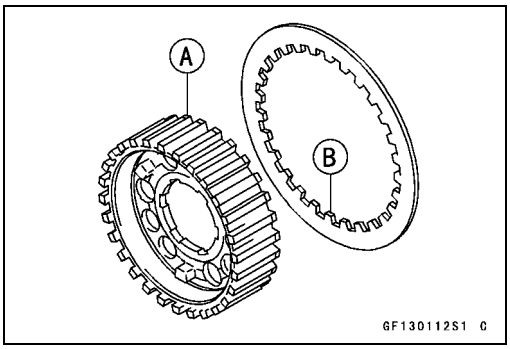

- Visually inspect where the teeth [B] on the steel plates wear against the splines [A] of the outer clutch hub.

★If there are notches worn into the splines, replace the outer clutch hub. Also, replace the steel plate with a new one of the same thickness if their teeth are damaged.

Downloaded from www.vulcanriders-sweden.org

Clutch

Cam Damper Inspection

- Disassemble the clutch (see Clutch Inner Hub Disassembly).
- Visually inspect the damper cam [A], damper spring [B], and cam follower [C].

★Replace any damaged parts.

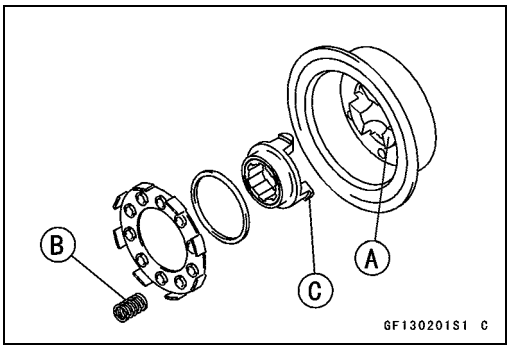

Downloaded from www.vulcanriders-sweden.org

Downloaded from www.vulcanriders-sweden.org

Engine Lubrication System

Table of Contents

Engine Oil Flow Chart 6-2
Exploded View 6-4
Specifications 6-5
Engine Oil and Oil Filter 6-6
  Oil Level Inspection 6-6
  Engine Oil Change 6-7
  Oil Filter Change 6-8
  Oil Screen Cleaning 6-8
Oil Pump 6-9
  Removal 6-9
  Installation 6-9
Oil Hoses and Pipes 6-10
  Outside Oil Hose Removal 6-10
  Outside Oil Hose Installation 6-10
  Inside Oil Pipe Removal 6-10
  Inside Oil Pipe Installation 6-11
  Blowby Gas System Inspection 6-12
  Oil Reserve Tank Removal 6-13
Oil Pressure 6-14
  Oil Pressure Measurement 6-14
  Relief Valve Inspection 6-14

Downloaded from www.vulcanriders-sweden.org

Engine Oil Flow Chart

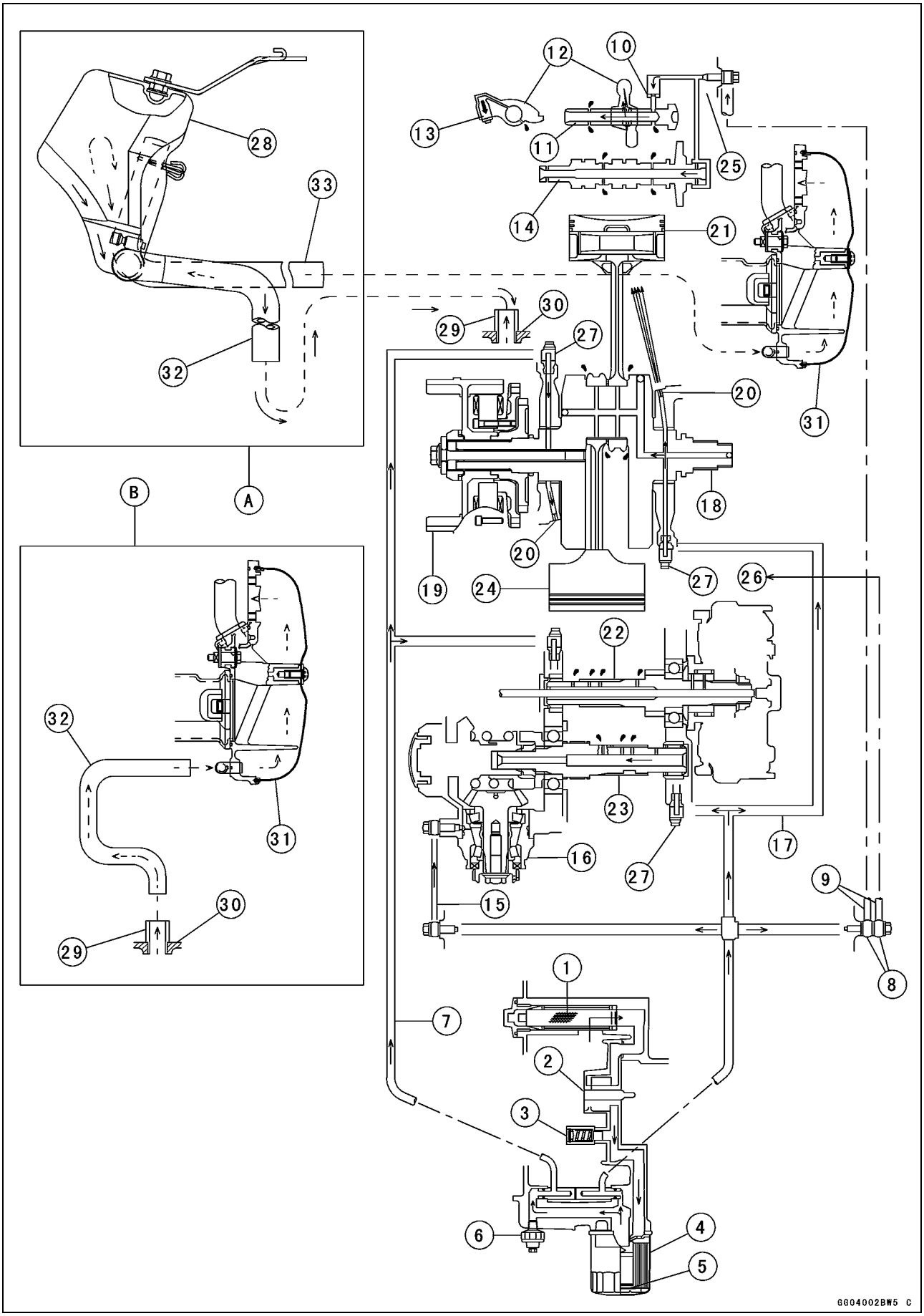

Downloaded from www.vulcanriders-sweden.org

Engine Oil Flow Chart

1. Oil Screen
2. Oil Pump
3. Relief Valve
4. Oil Filter
5. Bypass Valve
6. Oil Pressure Switch
7. Inside Oil Pipe
8. Banjo Bolts of Right Crankcase Rear
9. Outside Oil Hoses
10. HLA Oil Filter
11. Rocker Shafts
12. Rocker Arms
13. HLA (Hydraulic Lash Adjuster)
14. Camshafts
15. Outside Oil Pipe
16. Front Gear Case
17. Inside Oil Pipe
18. Crankshaft
19. Alternator Rotor
20. Oil Nozzle
21. Front Piston
22. Drive Shaft
23. Output Shaft
24. Rear Piston
25. Front Rockercase
26. Rear Rockercase
27. Inside Oil Pipe Fittings
28. Oil Reserve Tank (left view)
29. Fitting
30. Left Crankcase
31. Right Air Cleaner Housing (rear view)
32. Crankcase Breather Hose
33. Oil Reserve Tank Hose

A. VN1500-N1 ~ N2 Models
B. VN1500-N3 Model ~

→: Oil Flow (1 ~ 30)
- - >: Blowby Gas

Downloaded from www.vulcanriders-sweden.org

Exploded View

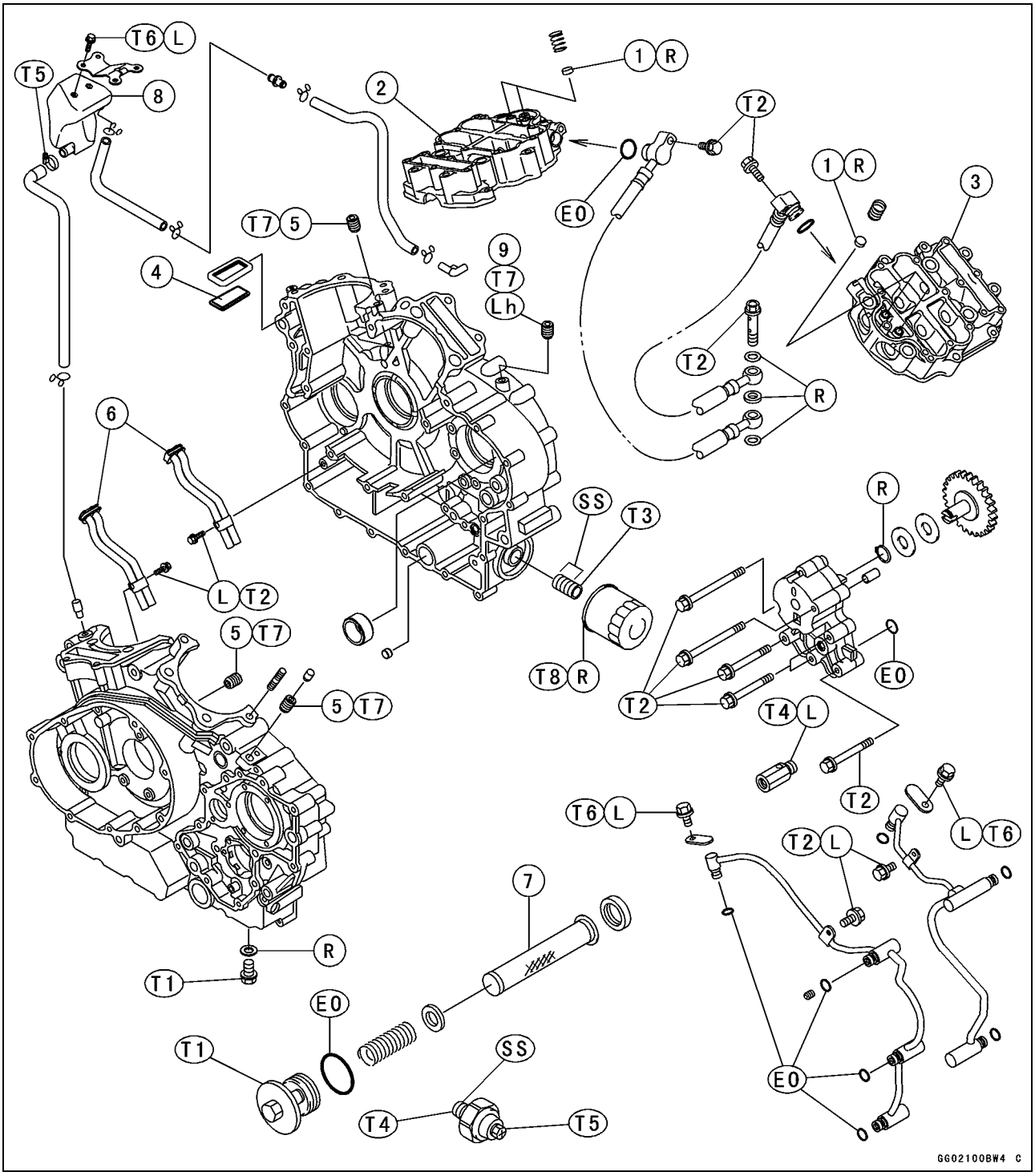

1. HLA Oil Filter
2. Front Rocker Case
3. Rear Rocker Case
4. Oil Separator
5. Oil Nozzle (× 3), right-hand threads
6. Oil Return Pipes
7. Oil Screen
8. Oil Reserve Tank (VN1500-N1 ~ N2 Models)
9. Oil Nozzle (× 1), left-hand threads

T1: 20 N·m (2.0 kgf·m, 14 ft·lb)
T2: 9.8 N·m (1.0 kgf·m, 87 in·lb)
T3: 25 N·m (2.5 kgf·m, 18 ft·lb)
T4: 15 N·m (1.5 kgf·m, 11 ft·lb)
T5: 1.5 N·m (0.15 kgf·m, 13 in·lb)
T6: 8.8 N·m (0.90 kgf·m, 78 in·lb)
T7: 3.4 N·m (0.35 kgf·m, 30 in·lb)
T8: 18 N·m (1.8 kgf·m, 13 ft·lb)
EO: Apply engine oil.
L: Apply a non-permanent locking agent.
Lh: Left-hand Threads
R: Replacement Parts
SS: Apply silicone sealant (Kawasaki Bond: 56019-120).

Downloaded from www.vulcanriders-sweden.org

Specifications

Items	VN1500-N1 ~ N2	VN1500-N3 ~ N4, N6F/T6F	VN1500N7F ~
Engine Oil:			
Grade	API SE, SF or SG API SH or SJ with JASO MA		API SE, SF or SG API SH, SJ or SL with JASO MA
Viscosity	SAE10W-40, 10W-50, 20W-40, or 20W-50	SAE10W-40	
Capacity	2.9 L (3.1 US qt) (when filter is not removed) 3.1 L (3.3 US qt) (when filter is removed) 3.5 L (3.7 US qt) (when engine is completely disassembled and dry)		
Level (after idling or running)	Between upper and lower level lines		
Oil Pressure Measurement			
Oil pressure	340 ~ 440 kPa (3.5 ~ 4.5 kgf/cm², 50 ~ 64 psi) @2 000 r/min (rpm), Oil temp. 100°C (212°F)		

Special Tools - Filler Cap Driver: 57001-1454
Oil Pressure Gauge, 5 kgf/cm²: 57001-125
Oil Pressure Gauge Adapter, PT 1/8: 57001-1033
Oil Filter Wrench: 57001-1249

Sealant - Kawasaki Bond (Silicone Sealant): 56019-120

Downloaded from www.vulcanriders-sweden.org

Engine Oil and Oil Filter

⚠ WARNING

Motorcycle operation with insufficient, deteriorated, or contaminated engine oil will cause accelerated wear and may result in engine or transmission seizure, accident, and injury.

Oil Level Inspection

- Situate the motorcycle so that it is vertical.
- Check that the engine oil level is between the upper [A] and lower [B] levels in the gauge.

Clutch Cover [C]
Front [D]

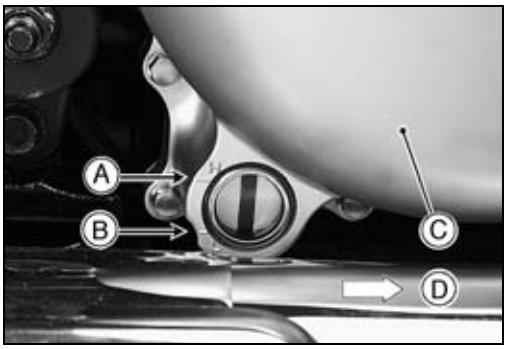

NOTE

- *Situate the motorcycle so that it is perpendicular to the ground.*
- *If the motorcycle has just been used, wait several minutes for all the oil to drain down.*
- *If the oil has just been changed, start the engine and run it for several minutes at idle speed. This fills the oil filter with oil. Stop the engine, then wait several minutes until the oil settles.*

CAUTION

Racing the engine before the oil reaches every part can cause engine seizure.
If the engine oil gets extremely low or if the oil pump or oil passages clog up or otherwise do not function properly, the oil pressure warning light will light. If this light stays on when the engine is running above idle speed, stop the engine immediately and find the cause.

Downloaded from www.vulcanriders-sweden.org

Engine Oil and Oil Filter

Engine Oil Change

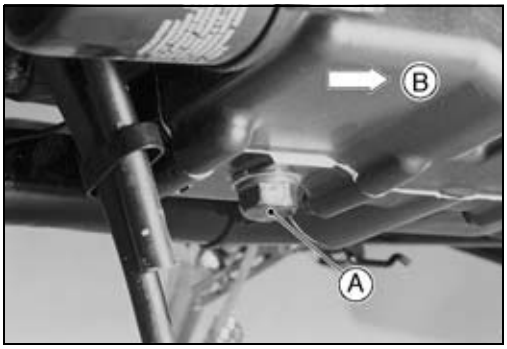

- Situate the motorcycle so that it is vertical after warming up the engine.
- Remove the engine oil drain bolt [A] and drain the oil.
  Front [B]

○The oil in the oil screen chamber can be drained by removing the oil screen plug (see Oil Screen Cleaning).

○The oil in the filter can be drained by removing the filter (see Oil Filter Change).

★Replace the drain bolt gasket with a new one if it is damaged.

- Tighten:

Torque - Engine Oil Drain Bolt , Oil Screen Plug: 20 N·m (2.0 kgf·m, 14 ft·lb)
Oil Filter: 18 N·m (1.8 kgf·m, 13 ft·lb)

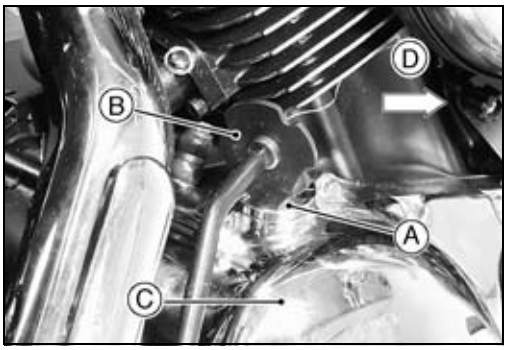

- Remove the oil filler cap [A] with the filler cap driver [B] and pour in the specified type and amount of oil.
  Clutch Cover [C]
  Front [D]

Special Tool - Filler Cap Driver: 57001-1454

- Tighten:

Torque - Oil Filler Cap: 1.5 N·m (0.15 kgf·m, 13 in·lb)

Recommended Engine Oil

Item	VN1500-N1~ N2	VN1500-N3 ~ N4, N6F/T6F	VN1500N7F ~
Grade	API SE, SF or SG API SH or SJ with JASO MA		API SE, SF or SG API SH, SJ or SL with JASO MA
Viscosity	SAE10W-40, 10W-50, 20W-40 or 20W-50	SAE 10W-40	

Engine Oil Capacity:

2.9 L (3.1 US qt) (when filter is not removed)

3.1 L (3.3 US qt) (When filter is removed)

3.5 L (3.7 US qt) (When engine is completely disassembled and dry)

NOTE

○*Although 10W-40 engine oil is the recommended oil for most conditions, the oil viscosity may need to be changed to accommodate atmospheric conditions in your riding area.*

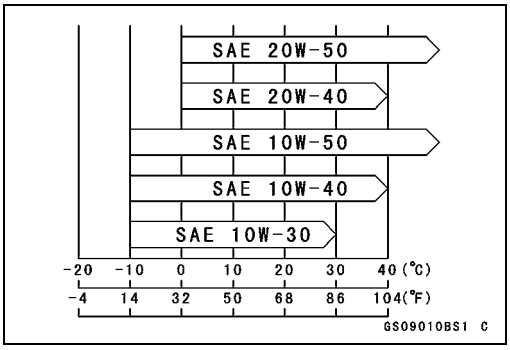

Downloaded from www.vulcanriders-sweden.org

Engine Oil and Oil Filter

Oil Filter Change

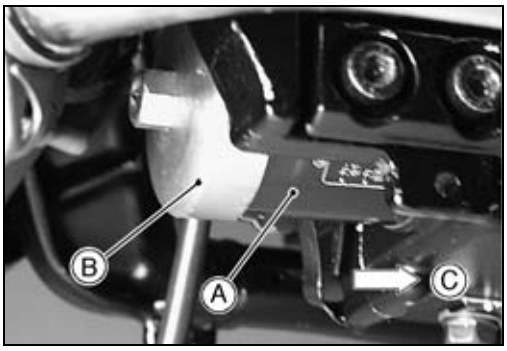

- Drain the engine oil.
- Remove the oil filter [A] with the oil filter wrench [B].
  Front [C]

Special Tool - Oil Filter Wrench: 57001-1249

NOTE

○*The filter has an oil filter bypass valve which can not be removed.*

- Apply oil to the gasket before installation.
- Tighten the filter with the oil filter wrench.

Torque - Oil Filter: 18 N·m (1.8 kgf·m, 13 ft·lb)

- Pour in the specified type and amount of oil.

Oil Screen Cleaning

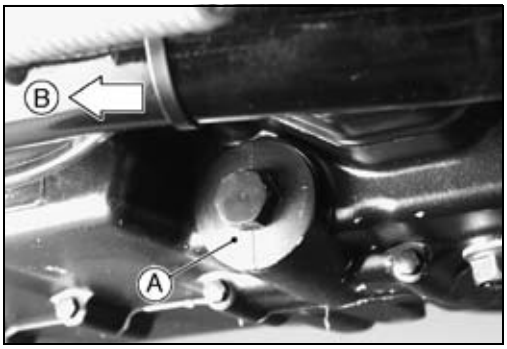

- Remove:
  Engine Oil (Drain)
  Oil Screen Plug [A]
  Front [B]

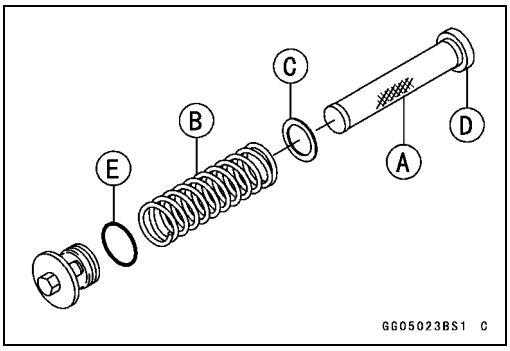

- Remove the oil screen [A], the spring [B], and the washer [C].
- Clean the oil screen with high-flash point solvent and remove any particles stuck to it.
- Clean the screen thoroughly whenever the engine oil is changed.

⚠ WARNING

Clean the screen in a well-ventilated area, and take care that there is no spark or flame anywhere near the working area. Because of the danger of highly flammable liquids, do not use gasoline or low-flash point solvents.

NOTE

○*While cleaning the screen, check for any metal particles that might indicate internal engine damage.*

- Check the screen carefully for any damage: holes and broken wires.

★If the screen is damaged, replace it.

- Be sure to put in the oil screen with the rubber gasket end [D] inside.

★Replace the oil screen plug O-ring [E] with new one if it is damaged.

- Tighten:

Torque - Oil Screen Plug: 20 N·m (2.0 kgf·m, 14 ft·lb)

- Pour in the specified type and amount of oil.

Downloaded from www.vulcanriders-sweden.org

Oil Pump

Removal

- Remove the engine (see Engine Removal/Installation chapter).
- Split the crankcase (see Crankshaft/Transmission chapter).
- Remove the oil pump mounting bolts, and take off the pump [A] out of the right crankcase.
- Unscrew the relief valve [B] if necessary.

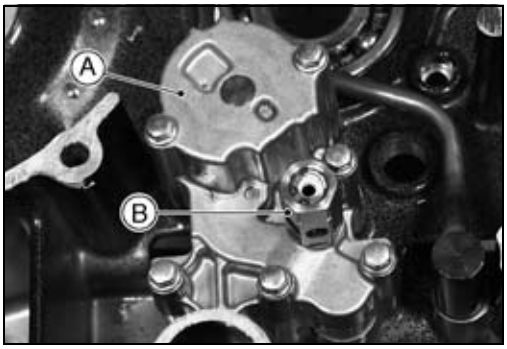

- Remove:
  Circlip [A]
  Pump Shaft [B]
  Washer [C]
  Pump Gear [D]

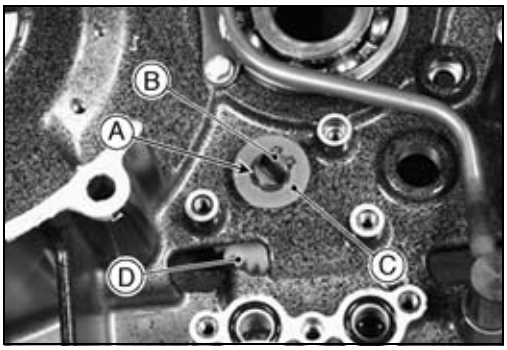

Installation

- Note the position of the oil pump shaft tang [A] and turn the pump gear shaft so that the tang fits into the slot [B] of the oil pump gear.
- Replace the O-rings [C] with new ones if they are damaged.
- Tighten:

Torque - Oil Pump Mounting Bolts: 9.8 N·m (1.0 kgf·m, 87 in·lb)

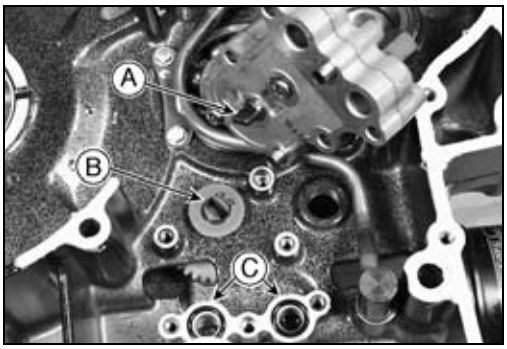

- Apply a non-permanent locking agent to the threads of the relief valve and install it.
- Tighten:

Torque - Oil Pressure Relief Valve: 15 N·m (1.5 kgf·m, 11 ft·lb)

Downloaded from www.vulcanriders-sweden.org

Oil Hoses and Pipes

Outside Oil Hose Removal

- Remove the engine (see Engine Removal/Installation chapter).
- Remove:
  Rocker Case Cover (see Engine Top End chapter)
  Oil Hose Flange Bolts [A] on Front and Rear Rocker Cases
  Oil Hose Banjo Bolt [B] on Right Crankcase behind Rear Cylinder
- Remove the front oil hose [C] and the rear oil hose [D].
  Front [E]

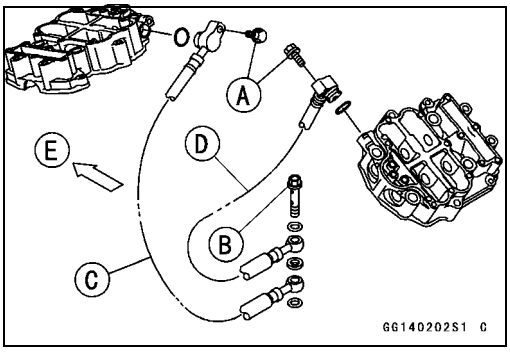

Outside Oil Hose Installation

- Run the front oil hose [A] over the inlet pipe [B] as shown.
  Front [C]
- Run the rear oil hose [D] downward.
- Run both oil hoses between the inlet pipe [E] and the cylinder fins [F].

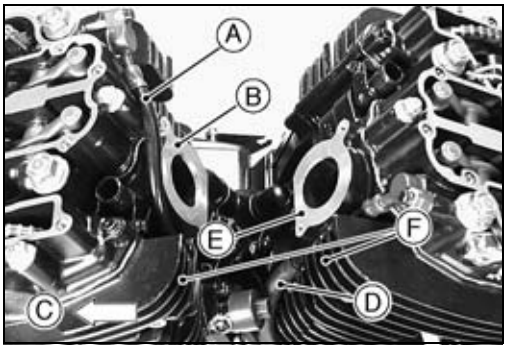

- Install each bottom end of the oil hoses on the right crankcase behind the rear cylinder as shown.
  Front Oil Hose [A]
  Rear Oil Hose [B]

○Face the paint marks [C] rearward.

- Replace the copper washers on each side of the banjo bolt with new ones.
- Tighten:

Torque - Oil Hose Flange Bolts: 9.8 N·m (1.0 kgf·m, 87 in·lb)
Oil Hose Banjo Bolt [D]: 9.8 N·m (1.0 kgf·m, 87 in·lb)

- Next install the rear chain tensioner (see Engine Top End chapter).

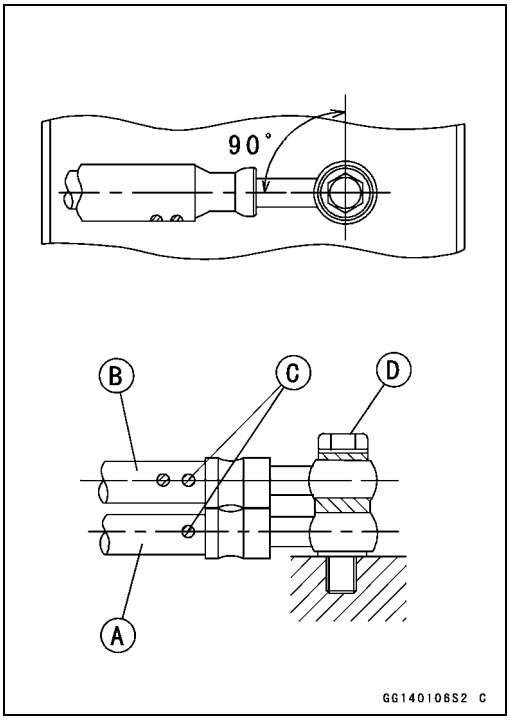

Inside Oil Pipe Removal

- Split the crankcase (see Crankshaft/Transmission chapter).
- Remove:
  Oil Pipe Clamp Bolts [A]
  Oil Pipe Holder Bolt [B]
  Separator [C]
- Remove the inside oil pipe [D] and the oil return pipe [E] from the right crankcase [F].

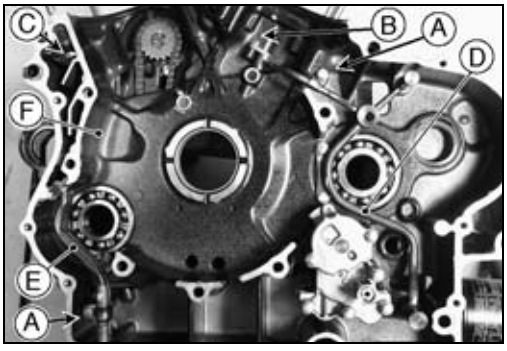

Downloaded from www.vulcanriders-sweden.org

Oil Hoses and Pipes

- Remove:
  Oil Pipe Clamp Bolt [A]
  Oil Pipe Holder Bolt [B]
- Remove the inside oil pipe [C] and the oili return pipe [D] from the left crankcase [E].
- Remove the speparator [F].

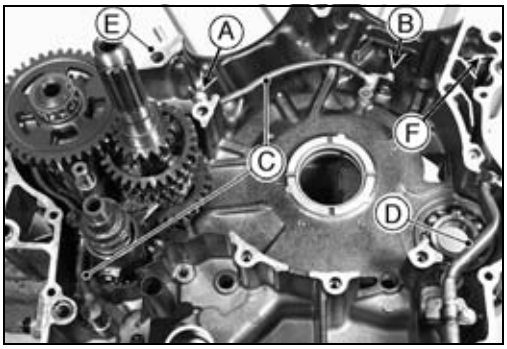

Inside Oil Pipe Installation

- Check that the oil pipe fitting O-rings [A] are in good condition.
- Apply engine oil to the O-rings before installation.
  Oil Pipe [B]
  Fitting [C]

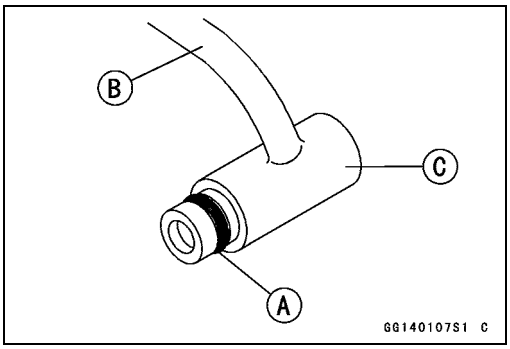

- Install the oil return pipes as shown.

○Do not apply silicone sealant to the groove of the grommet and the mating surface of the grommet. This differs from the VN1500-J1.

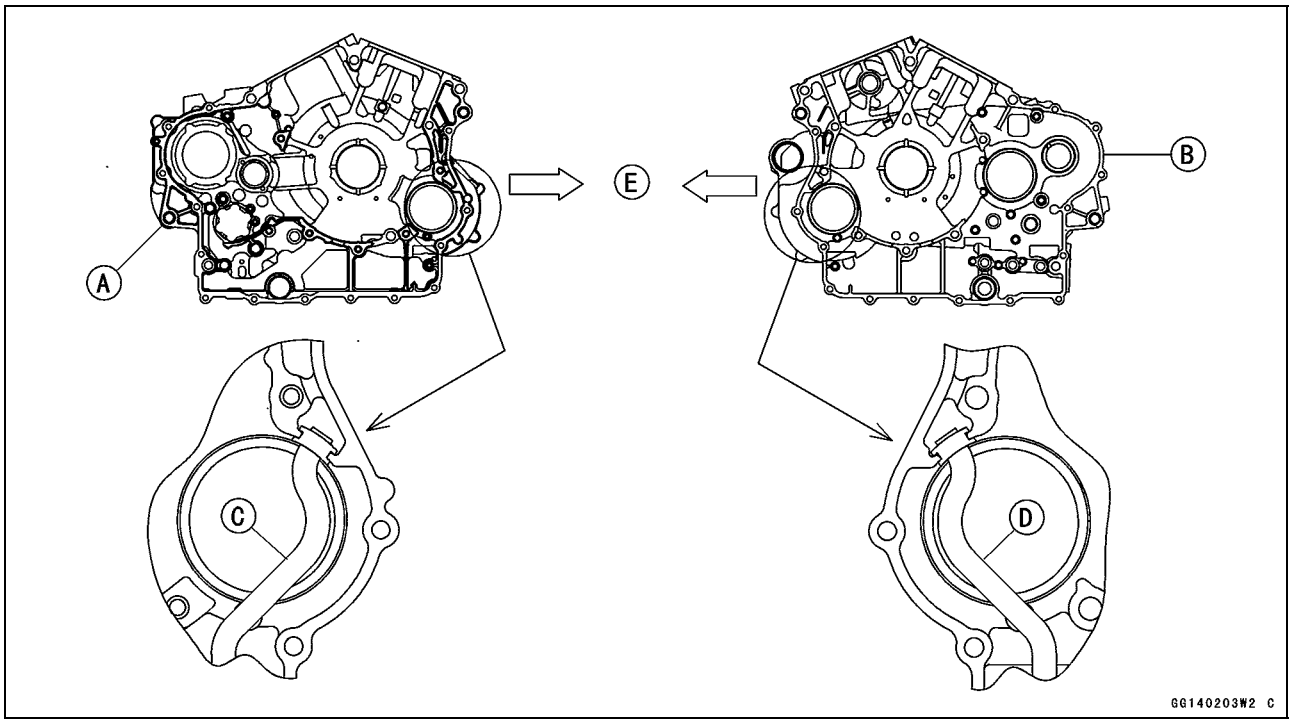

Left Crankcase [A]
Right Crankcase [B]
Left Oil Return Pipe [C
Right Oil Return Pipe [D]
Front [E]

Downloaded from www.vulcanriders-sweden.org

Oil Hoses and Pipes

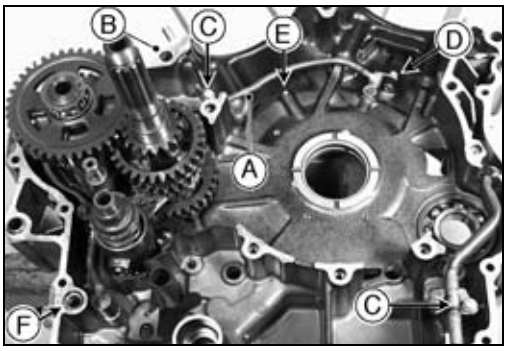

- Install the transmission gears, and then the left inside oil pipe [A] in the left crankcase [B].
- Install:
  Oil Pipe Clamp Bolts [C]
  Oil Pipe Holder Bolt [D]
  Oil Nozzle [E]
  O-ring [F]
- Apply:

Non-permanent Locking Agent -
Oil Pipe Holder Bolts, Oil Pipe Clamp Bolts

- Tighten:

Torque - Oil Pipe Holder Bolts: 8.8 N·m (0.90 kgf·m, 78 in·lb)
Oil Pipe Clamp Bolts: 9.8 N·m (1.0 kgf·m, 87 in·lb)

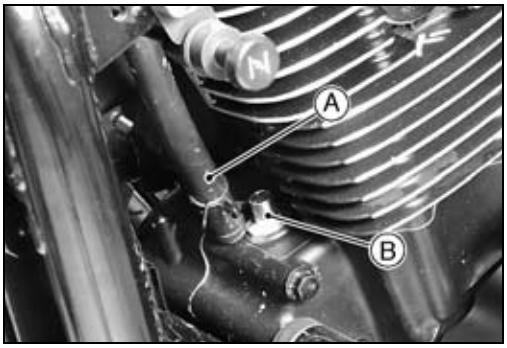

Blowby Gas System Inspection

- Be certain that all the hoses are routed without being flattened or kinked, and are connected correctly to the oil reserve tank and right air cleaner base.

★If they are not, correct them.

- Inspect the breather hoses [A], breather pipe [B] (left-front view), and the air cleaner drain hose for damage or signs of deterioration. Squeeze the hoses. These hoses should not be hard and brittle, nor should be soft or swollen.

★Replace any damaged hoses.

- Check that the hoses are securely connected.

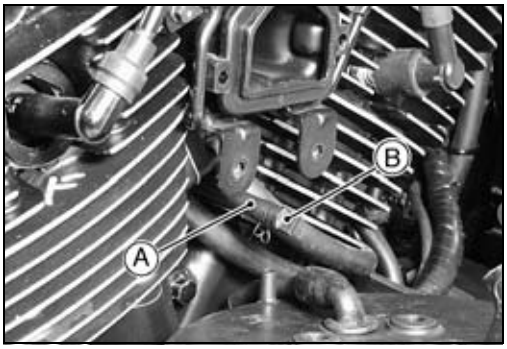

○The air cleaner drain hose is provided beneath the lower air cleaner duct, and catches the water or oil from the bottom of the right air cleaner housing. Usually water or oil does not collect at the bottom of the housing. In the event that rain water is drawn in through the air cleaner, or if engine oil is blown back, drain the housing.

- Remove the left air cleaner housing (see Fuel System chapter).
- Remove the drain plug [B] from the air cleaner drain hose [A] to drain the water or breather oil when changing engine oil (see Periodic Maintenance Chart).
- Install the plug to its original position.

⚠ WARNING

Be sure to reinstall the plug in the drain hose after draining. Oil on tires will make them slippery and can cause an accident and injry.

Downloaded from www.vulcanriders-sweden.org

Oil Hoses and Pipes

Oil Reserve Tank Removal

(VN1500-N1 ~ N2 Models)

- Remove:
  Right and Left Ignition Coils (see Electrical System chapter)
  Thermostat Housing and Bracket (see Cooling System chapter)
  Sensor Holder with Vacuum Sensor and Atmospheric Pressure Sensor
  Right Air Cleaner Housing (see Fuel System chapter)
  Oil Reserve Tank Hose End from Right Air Cleaner Base
  Crankcase Breather Hose End from Left Crankcase
- Take out the oil reserve tank [A] with the hoses [B] and bracket [C] attached.

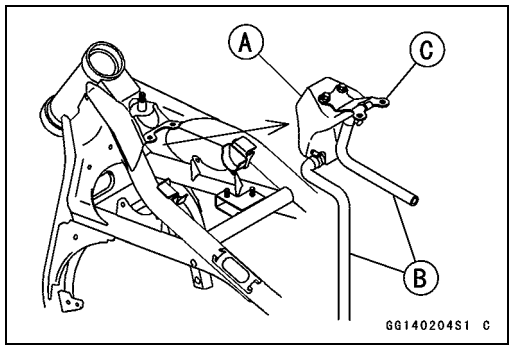

Downloaded from www.vulcanriders-sweden.org

Oil Pressure

Oil Pressure Measurement

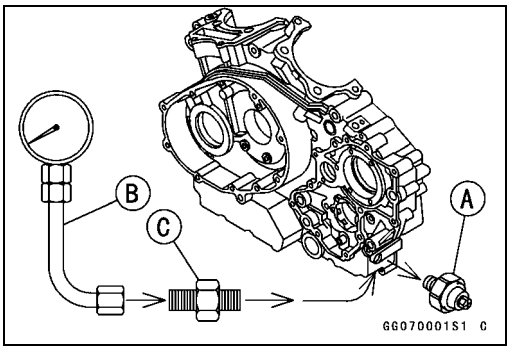

NOTE

○*Measure the oil pressure after the engine is warmed up.*

- Remove the oil pressure switch lead and unscrew the oil pressure switch [A].
- Attach the oil pressure gauge [B] and adapter [C] to the switch hole.

Special Tools - Oil Pressure Gauge, 5 kgf/cm²: 57001-125
Oil Pressure Gauge Adapter, PT 1/8: 57001 -1033

- Start the engine and warm up the engine.
- Run the engine at the specified speed, and read the oil pressure gauge.

★If the oil pressure is much lower than the standard, check the oil pump, oil pump relief valve, and/or crankshaft bearing wear and con-rod big end bearing insert wear immediately.

★If the reading is much higher than the standard, check the oil screen first, and the oil passages for dirt or clogging. Also, replace the oil filter.

Oil Pressure
Standard: 340 ~ 440 kPa (3.5 ~ 4.5 kgf/cm², 50 ~ 64 psi) @2 000 r/min (rpm), oil temp. 90°C (194°F)

- Stop the engine.
- Remove the oil pressure gauge and adapter.

⚠ WARNING

Take care against burns from hot engine oil that will drain through the oil passage when the plug is removed.

- When installing the oil pressure switch, apply silicone sealant to the threads of the switch, and tighten it to the specified torque.

Torque - Oil Pressure Switch: 15 N·m (1.5 kgf·m, 11 ft·lb)

Relief Valve Inspection

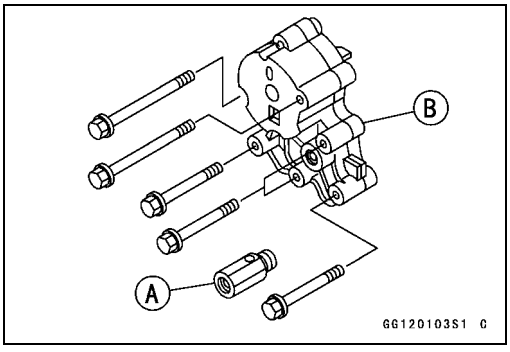

- Split the crankcase (see Crankshaft/Transmission chapter).
- Remove the relief valve [A] from the oil pump [B].
- Check to see if the valve slides smoothly when pushing it in with a wooden or other soft rod, and see if it comes back to its seat by spring pressure.

NOTE

○*Inspect the valve in its assembled state. Disassembly and assembly may change the valve performance.*

Downloaded from www.vulcanriders-sweden.org

Oil Pressure

★If any rough spots are found during above inspection, wash the valve clean with a high-flash point solvent and blow out any foreign particles that may be in the valve with compressed air in a well-ventilated area.

○Take care that there is no spark or flame anywhere near the working area.

Valve [A]

Spring [B]

★If cleaning does not solve the problem, replace the relief valve as an assembly. The relief valve is precision made with no allowance for replacement of individual parts.

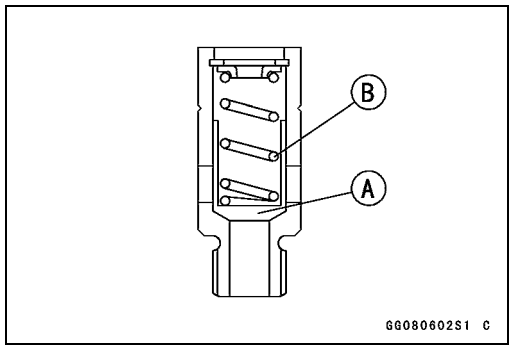

Downloaded from www.vulcanriders-sweden.org

Downloaded from www.vulcanriders-sweden.org

Engine Removal/Installation

Table of Contents

Exploded View 7-2
Specifications 7-3
Engine Removal/Installation 7-4
Engine Removal 7-4
Engine Installation 7-6

Downloaded from www.vulcanriders-sweden.org

Exploded View

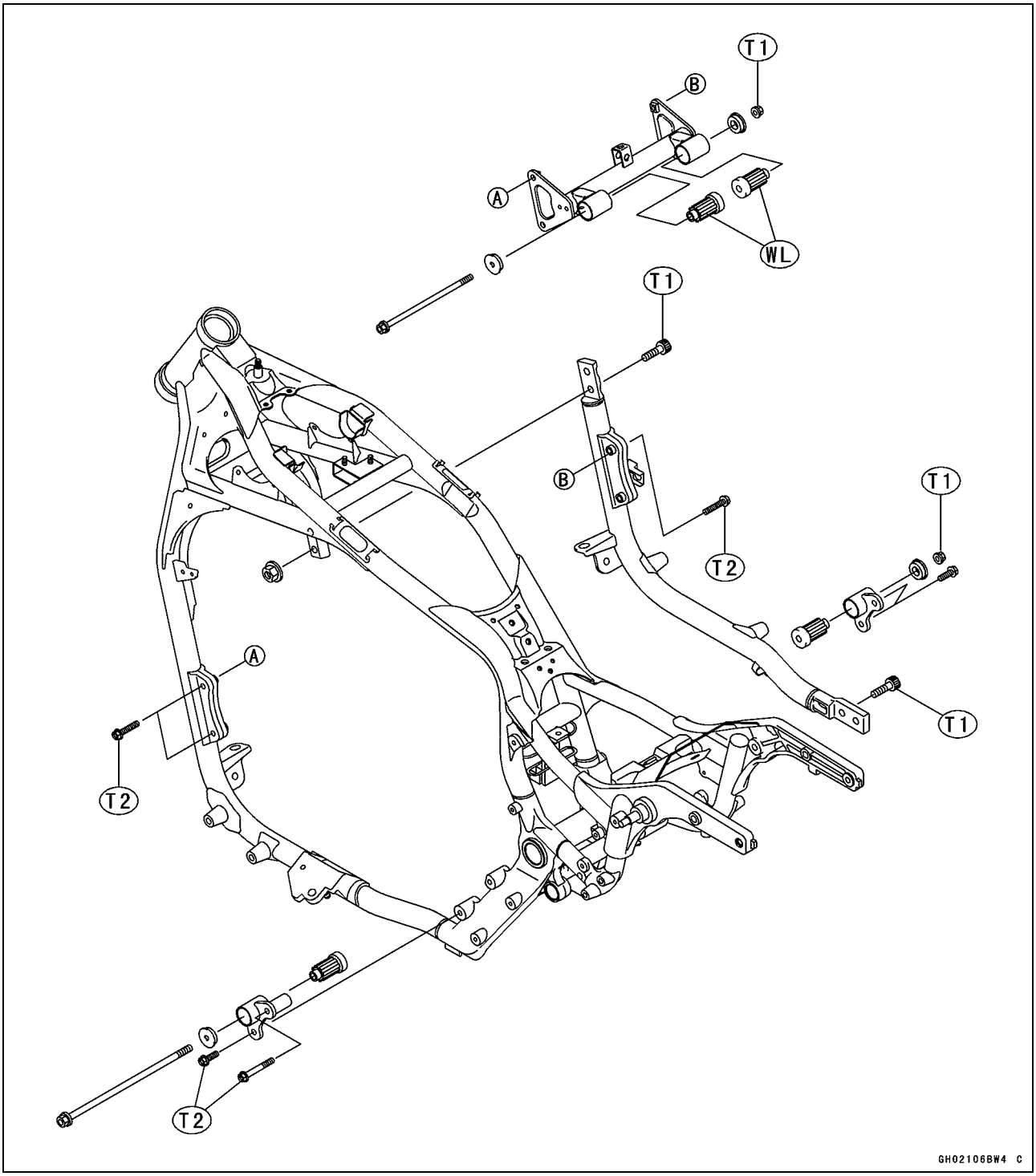

T1: 44 N·m (4.5 kgf·m, 32 ft·lb)
T2: 25 N·m (2.5 kgf·m, 18 ft·lb)
WL: Apply a soap and water solution or rubber lubricant.

Downloaded from www.vulcanriders-sweden.org

Specifications

Special Tools - Jack: 57001-1238
Attachment Jack: 57001-1398

Downloaded from www.vulcanriders-sweden.org

Engine Removal/Installation

Engine Removal

- Support the rear part of the frame on the jack [A], and the attachment jack [C].
  Front [B]

Special Tools - Jack: 57001-1238
Attachment Jack: 57001-1398

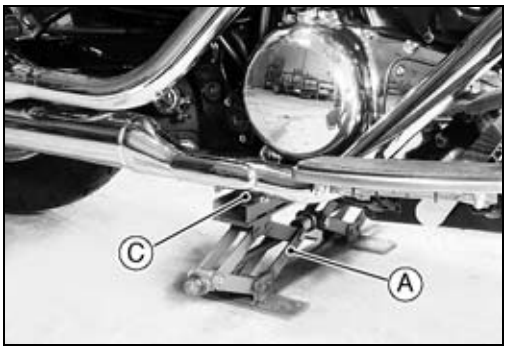

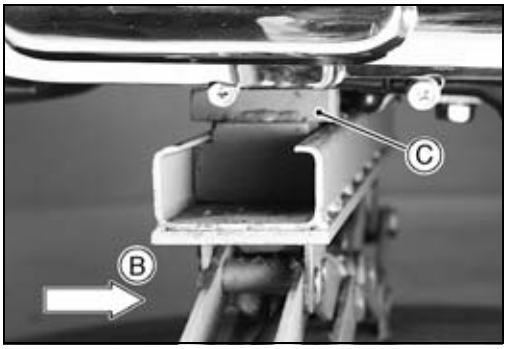

- Squeeze the brake lever slowly and hold it with a band [A].
  Front [B]

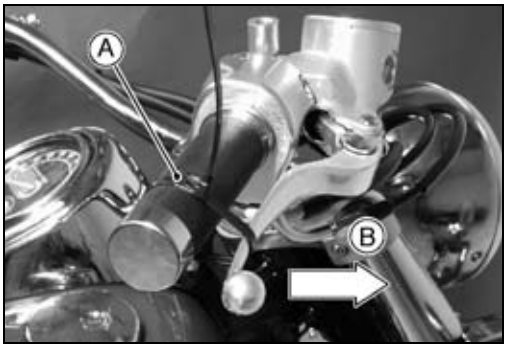

⚠ WARNING

Be sure to hold the front brake when removing the engine, or the motorcycle may fall over. It could cause an accident and injury.

CAUTION

Be sure to hold the front brake when removing the engine, or the motorcycle may fall over. The engine or the motorcycle could be damaged.

- Remove the fuel tank [A] (see Fuel System chapter).
- Drain:
  Coolant (see Cooling System chapter)
  Engine Oil (see Engine Lubrication System chapter)
- Remove:
  Left and Right Air Cleaner Housings [B] (see Fuel System chapter)
  Vacuum Switch Valve and Hoses
  Injector Connectors
  Throttle Switch Connector
  Fuel Hose Assy
  Vacuum Hose (from T-joint)
  Crankcase Breather Hose
  Oil Reserve Tank Hose (VN1500-N1 ~ N2 Models)
  Spark Plug Leads [C]

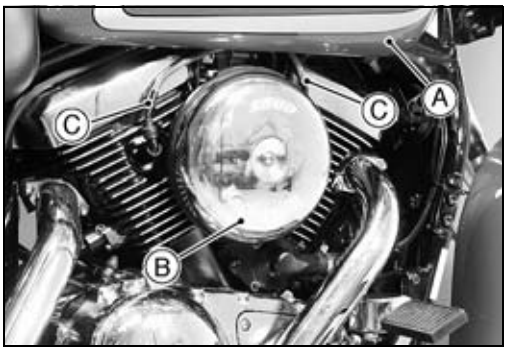

Downloaded from www.vulcanriders-sweden.org

Engine Removal/Installation

● Disconnect:
Bands [A]
Rear Brake Light Switch Connector [B]
Radiator Fan Motor Connector [C]
Front [D]
● Remove:
Radiator (see Cooling System chapter)
Front and Rear Shift Pedals (see Crankshaft/Transmission chapter)
Alternator Outer Cover (see Electrical System chapter)

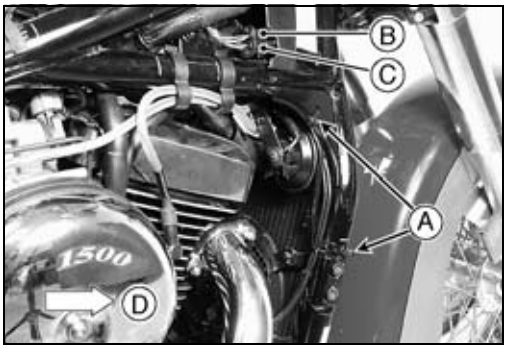

● Disconnect:
Speed Sensor Connector [A]
Starter Motor Terminal
Alternator Connectors [B]
Pickup Coil Lead Connector [C]
Oil Pressure/Neutral Switch Connector [D]
Regulator/Rectifier Connectors [E]
Sidestand Switch Connector [F]
● Remove:
Clutch Slave Cylinder [G]
Clutch Hose [H] (from the holder)

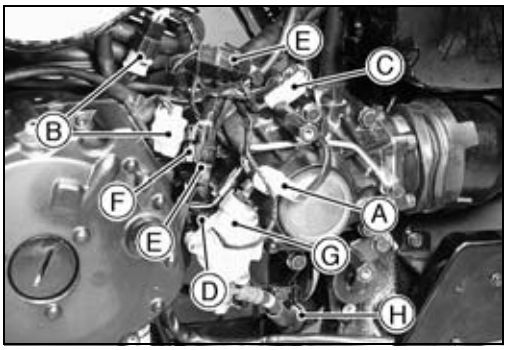

● Remove:
Horn Bolts [A]
Horns [B]

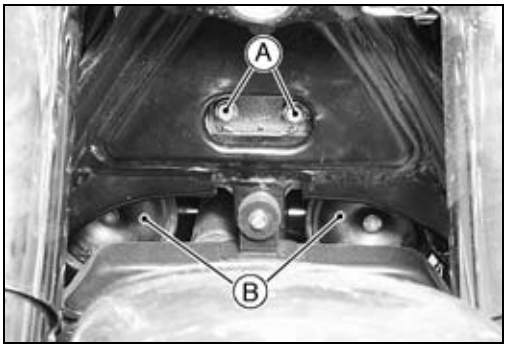

● Remove:
Water Hose [A] on Front Cylinder Head
Water Hose [B] on Rear Cylinder Head

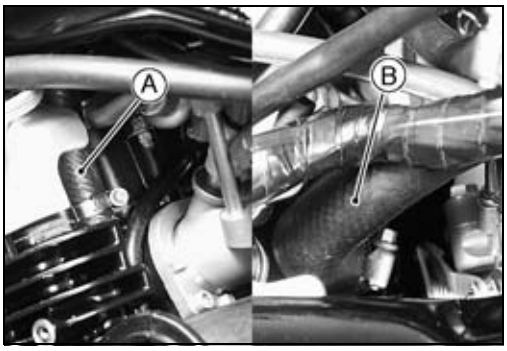

● Disconnect the engine ground terminal [A].
Front [B]

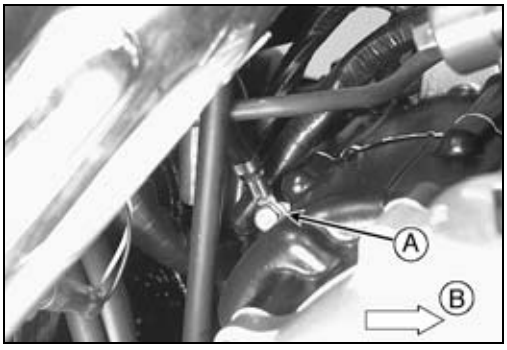

Downloaded from www.vulcanriders-sweden.org

Engine Removal/Installation

- Support the engine with a commercially available stand [A].
- Remove:
  Front and Rear Exhaust Pipes (see Engine Top End chapter)
  Engine Mounting Bracket Bolts [B]
  Downtube Bolts [C]

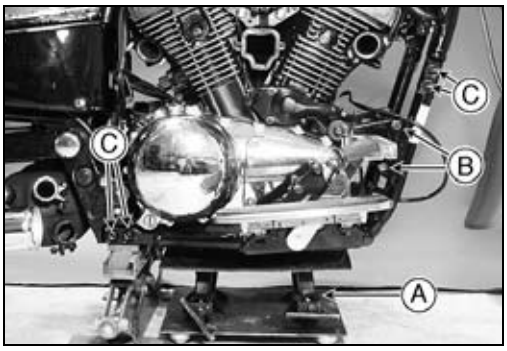

- Remove the downtube [A] with the right footboard and rear master cylinder installed.
- Remove:
  Engine Mounting Bracket Bolts [B]
  Engine Mounting Bolts and Nuts [C]

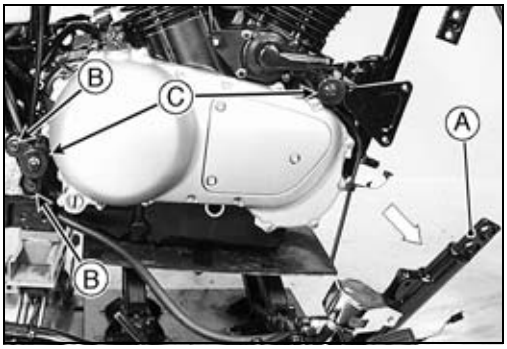

- Disengage the propeller shaft from the engine.
  ○Pull off the rubber boot [A] and push on the lockpin [B] a little with a wire.
  ○Move the engine forward [C] to free it from the rear propeller shaft.

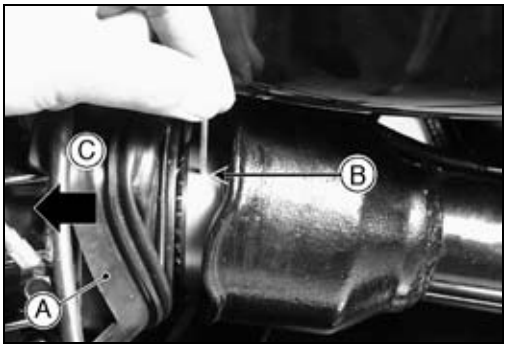

- Remove the engine [A] from the motorcycle right side.



Engine Installation

- Install the rubber boot [A] on the rear end of the front bevel gear case.
- Fit the spring [B] into the front bevel gear joint.
- Put the lockpin [C] into the front bevel gear joint.

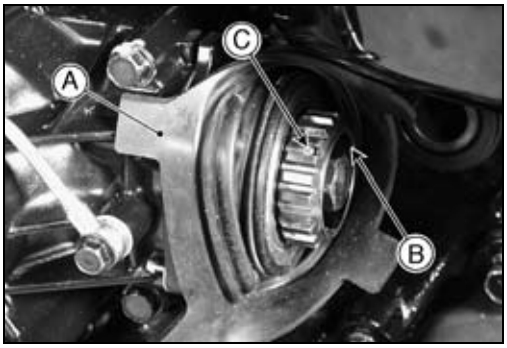

Downloaded from www.vulcanriders-sweden.org

Engine Removal/Installation

- Apply a thin coat of high temperature grease to the driven gear joint and to the propeller shaft joint.
- Push on the lockpin [A] and move back the engine to engage the front bevel gear joint with the propeller shaft joint.

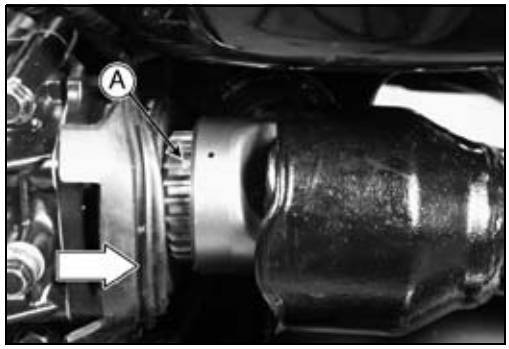

- Run the brake hose [A] and the clutch hose [B] inside the frame [C] as shown.
  Clamp [D]
  Strap [E]
  Front [F]

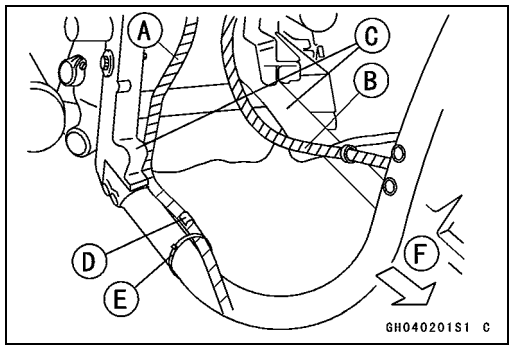

- Insert the rear mounting bolt from the left side of the engine to set the engine into its original position in the frame.
- Tighten:

Torque - Downtube Bolts: 44 N·m (4.5 kgf·m, 32 ft·lb)
Engine Mounting Bolts and Nuts: 44 N·m (4.5 kgf·m, 32 ft·lb)
Engine Mounting Bracket Bolts: 25 N·m (2.5 kgf·m, 18 ft·lb)

- Run the leads, cables and hoses correctly (see Cable, Wire and Hose Routing section in the General Information chapter).

- Connect the engine ground lead [A] down to the engine as shown.
- Tighten:

Torque - Engine Ground Terminal Bolt: 7.8 N·m (0.80 kgf·m, 69 in·lb)

Front [B]

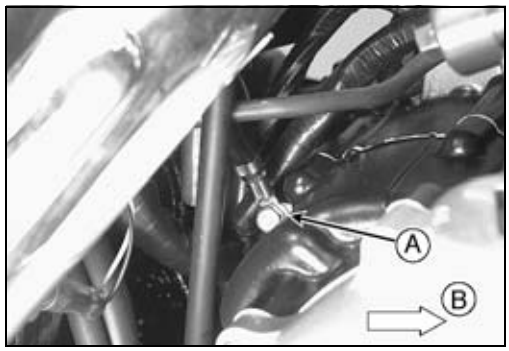

Downloaded from www.vulcanriders-sweden.org

Engine Removal/Installation

- Install the removed parts (see appropriate chapters).
- Adjust the throttle cables (see Fuel System chapter).
- Fill the engine with engine oil (see Engine Lubrication System chapter).
- Fill the engine with coolant and bleed the air from the cooling system (see Cooling System chapter).
- Adjust the idling (see Fuel System chapter).
- Check the clutch operation.
- Check the brake effectiveness.

⚠ WARNING

Do not attempt to ride the motorcycle until a full brake lever or pedal is obtained by pumping the brake lever or pedal until the pads are against the disc. The brake will not function on the first application of the lever or pedal if this is not done.

Downloaded from www.vulcanriders-sweden.org

Crankshaft/Transmission

Table of Contents

Exploded View 8-2
Specifications 8-6
Crankcase 8-8
  Disassembly 8-8
  Assembly 8-11
Crankshaft/Connecting Rods 8-18
  Connecting Rod Removal 8-18
  Connecting Rod Installation 8-18
  Crankshaft/Connecting Rod Cleaning 8-19
  Connecting Rod Bend Inspection 8-19
  Connecting Rod Twist Inspection. 8-19
  Connecting Rod Big End Side Clearance Inspection 8-20
  Connecting Rod Big End Bearing Wear Inspection 8-20
  Crankshaft Runout Inspection 8-22
  Crankshaft Main Bearing/Journal Wear Inspection 8-22
  Crankshaft Side Clearance Inspection 8-22
Starter Clutch 8-23
  Removal 8-23
  Installation 8-23
  Disassembly 8-23
  Assembly 8-24
  Inspection 8-24
Starter Torque Limiter 8-25
  Removal 8-25
  Inspection 8-25
Water Pump Idle Shaft Holder 8-26
  Removal 8-26
  Installation 8-26
Primary Gear 8-27
  Removal 8-27
  Installation 8-27
Transmission 8-28
  Shift Pedal Removal 8-28
  Front Shift Pedal Installation 8-28
  Rear Shift Pedal Installation 8-28
  External Shift Mechanism Removal 8-28
  External Shift Mechanism Installation 8-29
  External Shift Mechanism Inspection 8-29
  Transmission Removal 8-30
  Transmission Installation 8-31
  Shift Drum Disassembly/Assembly 8-31
  Transmission Disassembly 8-32
  Transmission Assembly 8-32
  Shift Fork Bending Inspection 8-36
  Shift Fork/Gear Groove Wear Inspection 8-36
  Shift Fork Guide Pin/Drum Groove Wear Inspection 8-37
  Gear Dog and Gear Dog Hole Damage Inspection 8-37
Ball Bearing, Needle Bearing, and Oil Seal 8-38
  Ball Bearing and Outer Race Replacement 8-38
  Ball and Needle Bearing Wear Inspection 8-38
  Oil Seal Inspection 8-39

Downloaded from www.vulcanriders-sweden.org

Exploded View

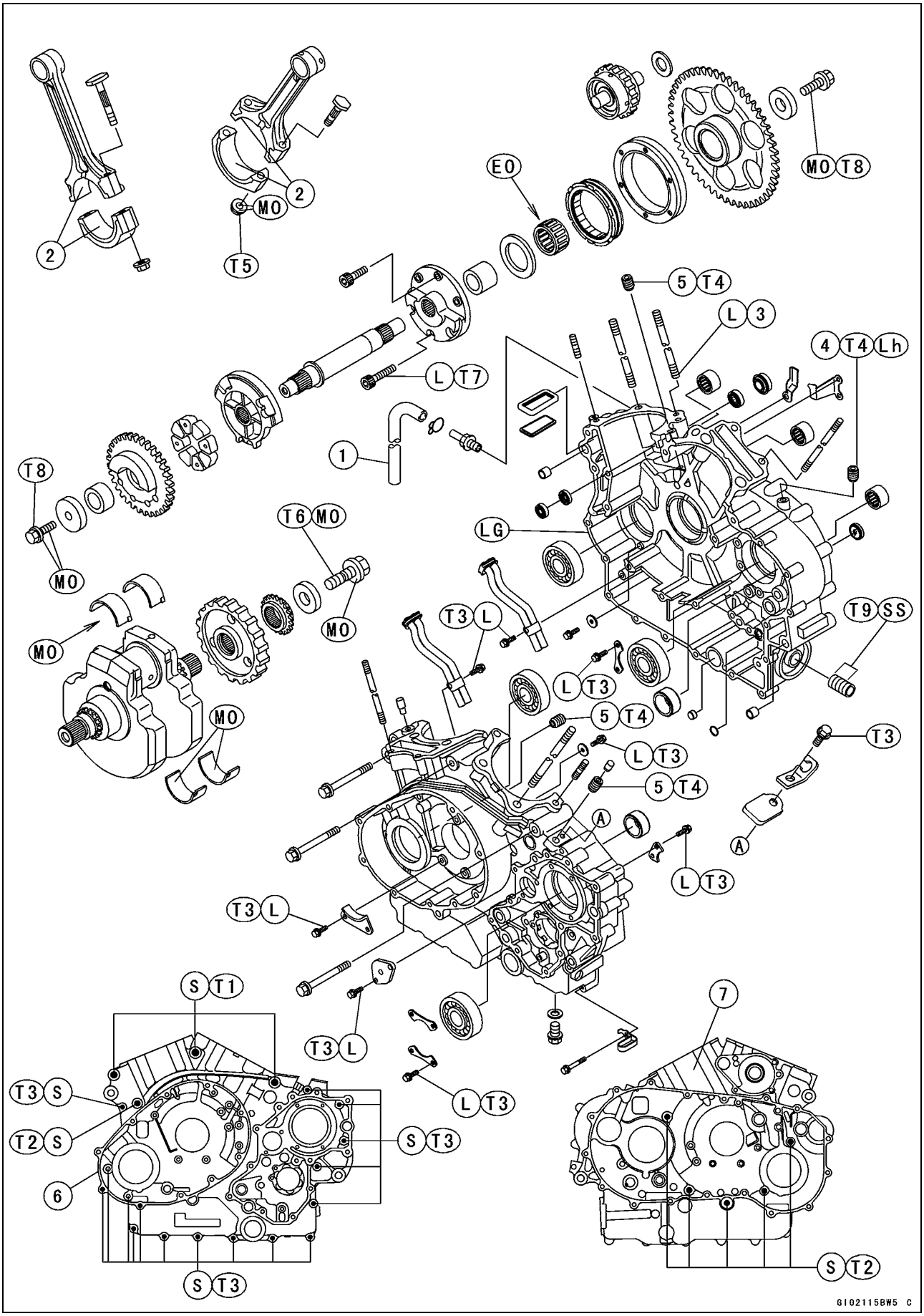

Downloaded from www.vulcanriders-sweden.org

Exploded View

1. Water Pump Drainage Outlet Hose
2. Do not apply any oil.
3. Apply a non-permanent locking agent to the tap end of this stud only.
4. Oil Nozzle (× 1): Left-hand Threads, green
5. Oil Nozzles (× 3): Right-hand Threads, green
6. Left Crankcase
7. Right Crankcase

T1: 39 N·m (4.0 kgf·m, 29 ft·lb)
T2: 21 N·m (2.1 kgf·m, 15 ft·lb)
T3: 9.8 N·m (1.0 kgf·m, 87 in·lb)
T4: 3.4 N·m (0.35 kgf·m, 30 in·lb)
T5: 59 N·m (6.0 kgf·m, 43 ft·lb)
T6: 147 N·m (15.0 kgf·m, 108 ft·lb)
T7: 15 N·m (1.5 kgf·m, 11 ft·lb)
T8: 85 N·m (8.7 kgf·m, 63 ft·lb)
EO: Apply engine oil.
L: Apply a non-permanent locking agent.
LG: Apply liquid gasket (Kawasaki Bond: 92104-1003).
Lh: Left-hand Threads
MO: Apply molybdenum disulfide oil.
The molybdenum disulfide oil is a mixture of engine oil and molybdenum disulfide grease with a weight ratio (10 : 1).
S: Follow the specific tightening sequence.
SS: Apply silicone sealant (Kawasaki Bond: 56019-120).

Downloaded from www.vulcanriders-sweden.org

Exploded View

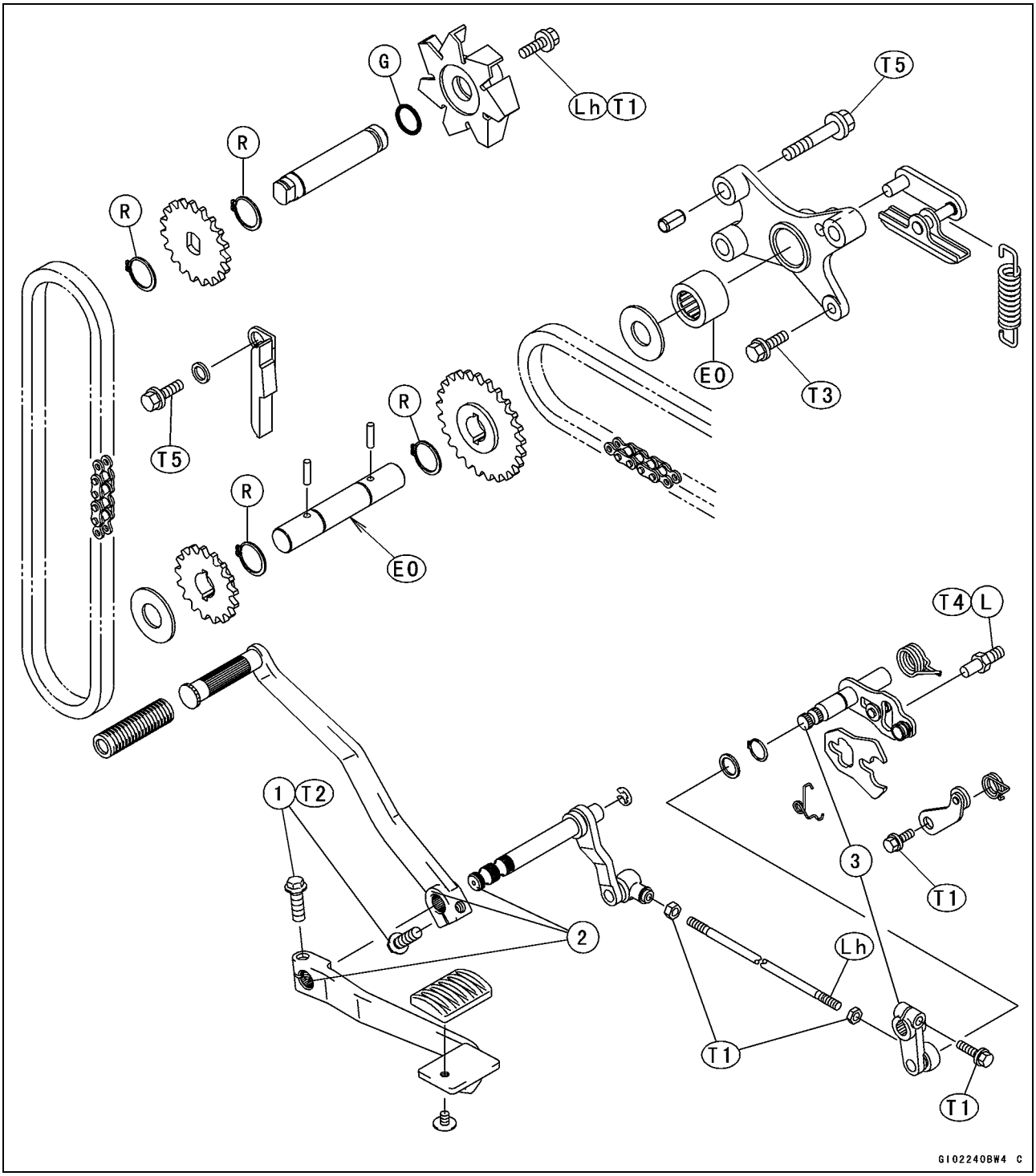

1. Each bolt head is numbered 10.
2. Align the punch marks.
3. Align the punch mark with the slit.

T1: 9.8 N·m (1.0 kgf·m, 87 in·lb)
T2: 17 N·m (1.7 kgf·m, 12 ft·lb)
T3: 2.9 N·m (0.30 kgf·m, 26 in·lb)
T4: 20 N·m (2.0 kgf·m, 14 ft·lb)
39 N·m (4.0 kgf·m, 29 ft·lb) (Bolt with punch mark)
T5: 7.8 N·m (0.80 kgf·m, 69 in·lb)
EO: Apply engine oil.
G: Apply grease.
L: Apply a non-permanent locking agent.
Lh: Left-hand Threads
R: Replacement Parts

Downloaded from www.vulcanriders-sweden.org

Exploded View

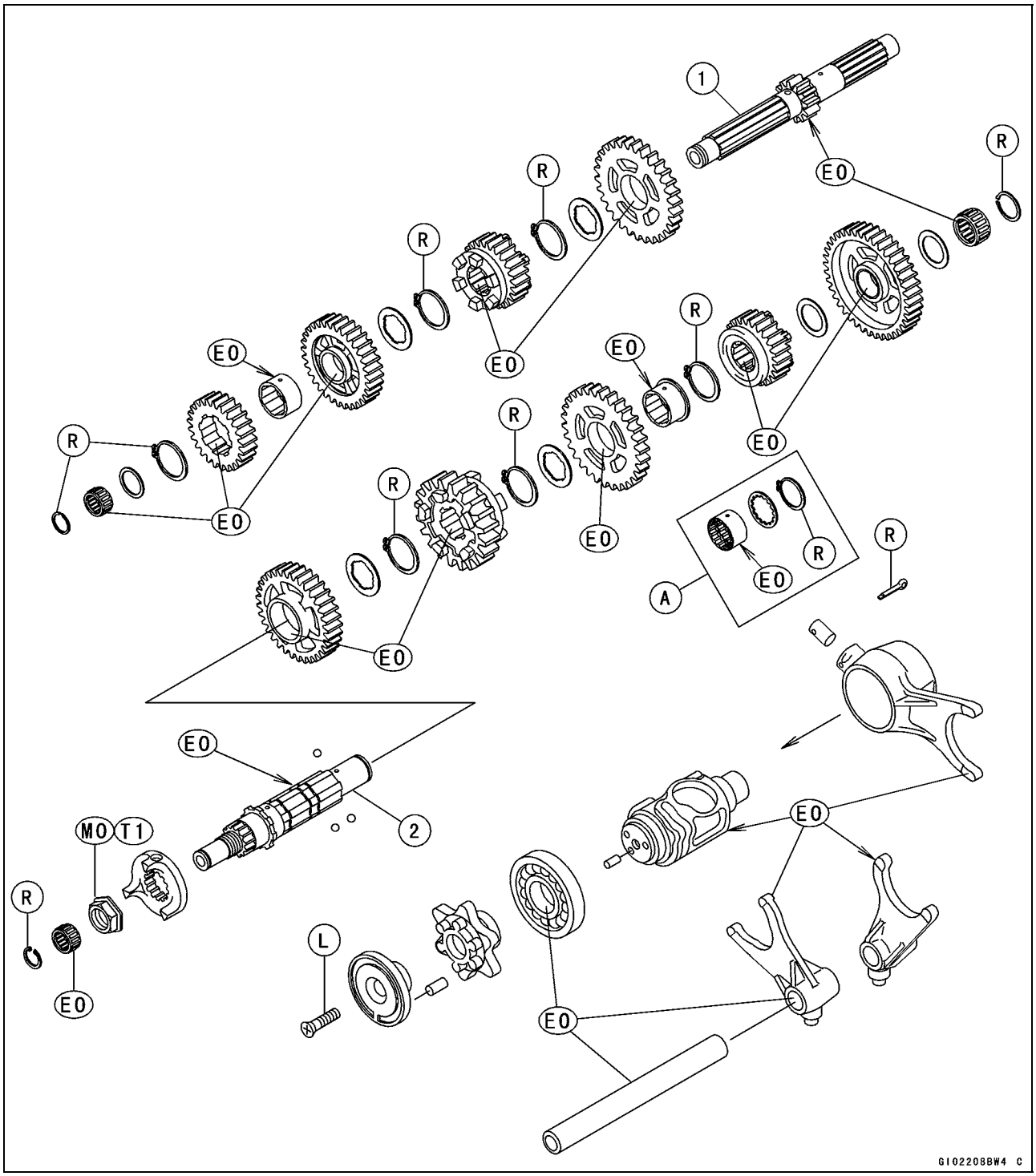

A: VN1500-N3 Model ~
1. Drive Shaft
2. Output Shaft
T1: 196 N·m (20.0 kgf·m, 145 ft·lb)
EO: Apply engine oil.
L: Apply a non-permanent locking agent.
MO: Apply molybdenum disulfide oil.
The molybdenum disulfide oil is a mixture of engine oil and molybdenum disulfide grease with a weight ratio (10 : 1).
R: Replacement Parts

Downloaded from www.vulcanriders-sweden.org

Specifications

Item	Standard	Service Limit
Crankshaft, Connecting Rods		
Connecting Rod Bend	– – –	TIR 0.2/100 mm (0.008/3.94 in.)
Connecting Rod Twist	– – –	TIR 0.2/100 mm (0.008/3.94 in.)
Connecting Rod Big End Side Clearance	0.16 ~ 0.46 mm (0.0063 ~ 0.0181 in.)	0.7 mm (0.028 in.)
Connecting Rod Big End Bearing Insert/Crankpin Clearance	0.026 ~ 0.057 mm (0.0010 ~ 0.0022 in.)	0.10 mm (0.004 in.)
Crankpin Diameter:	54.981 ~ 55.000 mm (2.1646 ~ 2.1654 in.)	54.97 mm (2.164 in.)
Marking:		
None	54.981 ~ 54.991 mm (2.1646 ~ 2.1650 in.)	– – –
○	54.992 ~ 55.000 mm (2.1650 ~ 2.1654 in.)	– – –
Connecting Rod Big End Bore Diameter:	58.000 ~ 58.020 mm (2.2835 ~ 2.2842 in.)	– – –
Marking:		
None	58.000 ~ 58.010 mm (2.2835 ~ 2.2839 in.)	– – –
○	58.011 ~ 58.020 mm (2.2839 ~ 2.2842 in.)	– – –
Connecting Rod Big End Bearing Insert Thickness:		
Brown	1.483 ~ 1.487 mm (0.0584 ~ 0.0585 in.)	– – –
Black	1.487 ~ 1.491 mm (0.0585 ~ 0.0587 in.)	– – –
Blue	1.491 ~ 1.495 mm (0.0587 ~ 0.0589 in.)	– – –

Connecting Rod Big End Bearing Insert Selection:

Con-rod Big End Bore Diameter Marking	Crankpin Diameter Marking	Bearing Insert	
		Size Color	Parts Number
None	○	Brown	92028-1476
None	None	Black	92028-1475
○	○		
○	None	Blue	92028-1474

Crankshaft Side Clearance	0.05 ~ 0.55 mm (0.0020 ~ 0.0219 in.)	0.75 mm (0.0295 in.)
Crankshaft Web Length	96.85 ~ 96.95 mm (3.183 ~ 3.817 in.)	96.6 mm (3.803 in.)
Crankshaft Runout	TIR 0.02 mm (0.0008 in.) or less	TIR 0.05 mm (0.002 in.)

Downloaded from www.vulcanriders-sweden.org

Specifications

Item	Standard	Service Limit
Crankshaft Main Bearing/Journal Clearance	0.025 ~ 0.052 mm (0.0010 ~ 0.0020 in.)	0.10 mm (0.004 in.)
Crankshaft Main Journal Diameter	54.986 ~ 55.000 mm (2.1648 ~ 2.1654 in.)	54.96 mm (2.164 in.)
Crankcase Main Bearing Bore Diameter	55.025 ~ 55.038 mm (2.1663 ~ 2.1668 in.)	55.07 mm (2.168 in.)
Transmission		
Shift Fork Ear Thickness	5.9 ~ 6.0 mm 0.2323 ~ 0.2362 in.)	5.8 mm (0.2283 in.)
Gear Shift Fork Groove Width	6.05 ~ 6.15 mm (0.2382 ~ 0.2421 in.)	6.3 mm (0.2480 in.)
Shift Fork Guide Pin Diameter	7.9 ~ 8.0 mm (0.3110 ~ 0.3150 in.)	7.8 mm (0.3071 in.)
Shift Drum Groove Width	8.05 ~ 8.20 mm (0.3169 ~ 0.3228 in.)	8.3 mm (0.3268 in.)

Special Tools - Outside Circlip Pliers: 57001-144
Gear Holder, m1.75: 57001-1015
Damper Cam Holder: 57001-1025
Bearing Driver Set: 57001-1129
Flywheel Holder: 57001-1410
Flywheel Holder: 57001-1313

Sealant - Kawasaki Bond (Liquid Gasket - Black): 92104-1003
Kawasaki Bond (Silicone Sealant): 56019-120

Downloaded from www.vulcanriders-sweden.org

Crankcase

Disassembly

- Remove:
  Engine (see Engine Removal/Installation chapter)
  Cylinder Blocks (see Engine Top End chapter)
  Pistons (see Engine Top End chapter)
  Clutch (see Clutch chapter)
  Front Gear Case (see Final Drive chapter)
  Alternator Inner Cover (see Electrical System chapter)
- Remove the shift shaft [A] while pushing [B] the shift mechanism arm [C] towards the shift shaft.
- Unscrew the bolt and remove the gear set lever [D] and its spring.

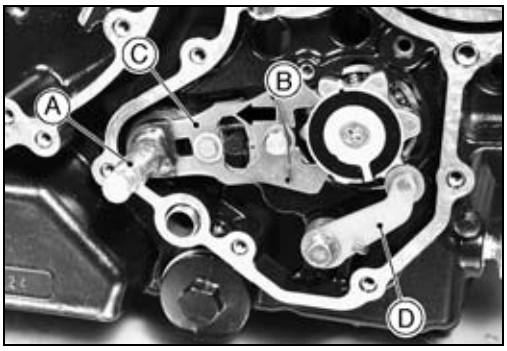

- Remove the retainer and needle bearing of the output shaft.
- Remove the clutch push rod guide [A] and bolts, and crankcase bearing upper retainer and bolts.
- Insert a bolt (ϕ12 mm, L 100 mm) [B] into the engine mounting bolt hole.
- Unscrew the damper cam nut [C] using the damper cam holder [D] (special tool) and deep socket wrench.

Special Tool - Damper Cam Holder: 57001-1025



- Pull the starter clutch gear [A] out of the starter clutch (The starter clutch gear can be removed with the engine in the frame).

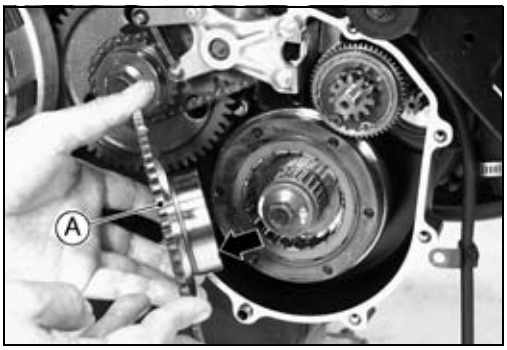

- Loosen the starter clutch bolt [A] while holding the primary gear bolt [B].
- Take out the torque limiter [C].

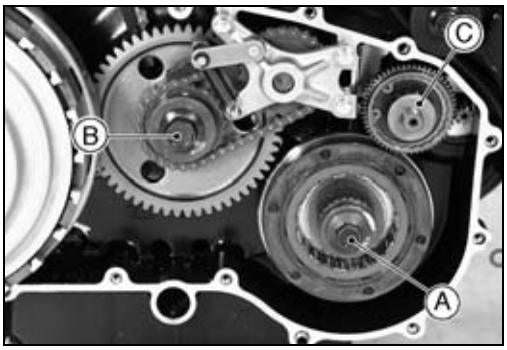

Downloaded from www.vulcanriders-sweden.org

Crankcase

- Remove the following parts from the right end of the balancer shaft.
  Starter Clutch Bolt [A]
  Washer [B]
  Collar [C]
  Needle Bearing [D]
  Copper Washer [E]
  Starter Clutch [F]

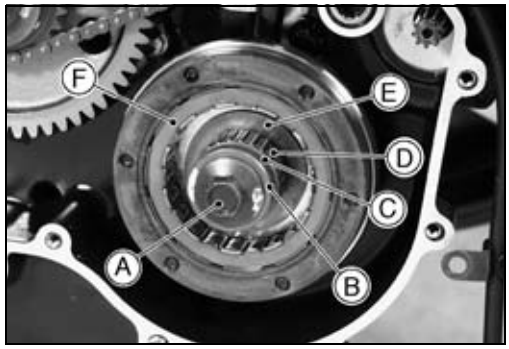

- Loosen the primary gear bolt [A] while holding the alternator rotor steady with the flywheel holder (special tool) (The primary gear can be removed with the engine in the frame).
  Primary Gear [B]

  Special Tool - Flywheel Holder: 57001-1410

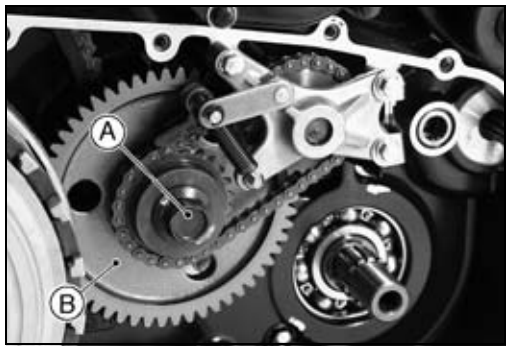

- Loosen the left balancer gear bolt [A], using the flywheel holder [B]. The left balancer gear bolt is right-hand threads.

  Special Tool - Flywheel Holder: 57001-1410
- Remove the alternator rotor bolt [C].

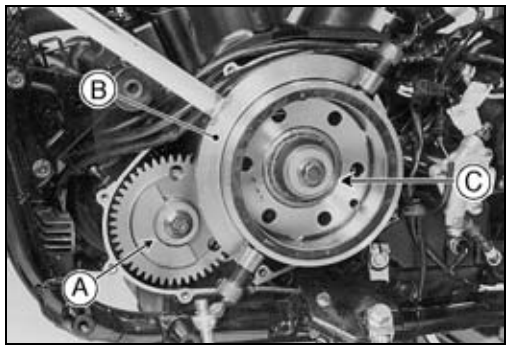

- Take the alternator rotor with the washer and ratchet off the crankshaft.
- Remove the inside stator coil (see Electrical System chapter).
- Remove the left balancer gear bolt [A], and take the balancer gear [B], washer [C], and left balancer [D] off the balancer shaft as a set.

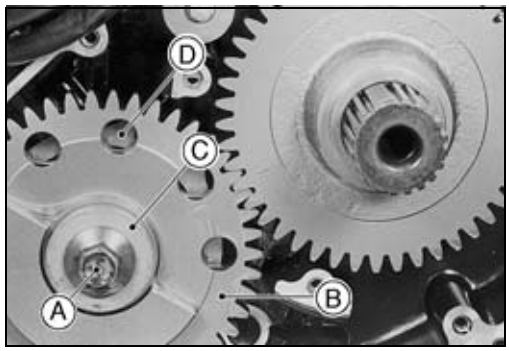

- Remove the following parts from the left crankcase with the cylinder head removed.
  Front Chain Holder [A]
  Lower Chain Guide [B]
  Rear Chain Guide [C]
  Front Camshaft Chain [D]
  Front [E]

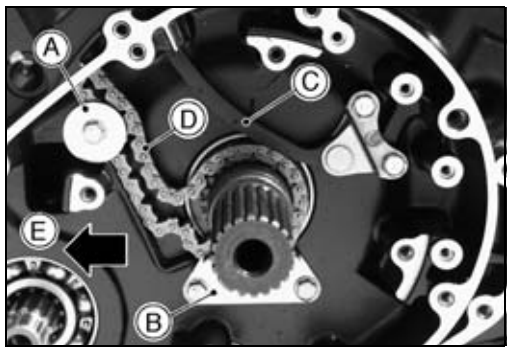

Downloaded from www.vulcanriders-sweden.org

Crankcase

- Remove the idle shaft holder [A] and chain guide [B] from the right crankcase (The idle shaft holder can be removed with the engine in the frame).

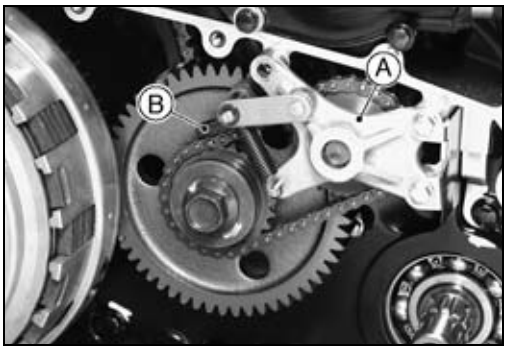

- Remove the primary gear bolt [A] and take out the water pump drive sprocket [B] and idle shaft sprocket [C] as a set.
  Chain [D]

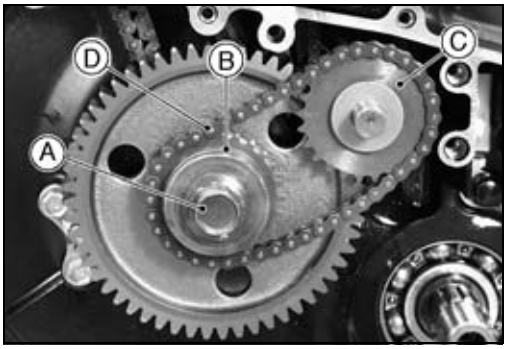

- Pull the primary gear [A] out of the crankshaft, and take the idle shaft [B] out of the crankcase. The idle shaft has two pins [C].



- Remove the following parts with the cylinder head removed.
  Idle Shaft Sprocket [A] (with flat washer) from Water Pump Chain [B]
  Rear Camshaft Chain [C]
  Lower Chain Guide [D]
  Rear Chain Guide [E]
  Front [F]

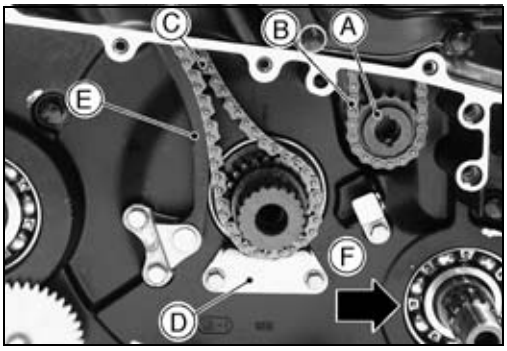

- Remove the starter motor bolts [B] and the starter motor [A] out of the crankcase.

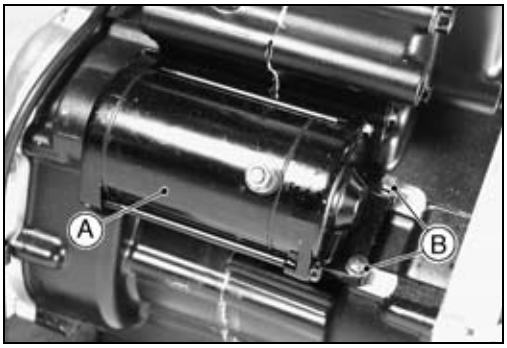

Downloaded from www.vulcanriders-sweden.org

Crankcase

- Remove the right crankcase bolts.
  ϕ8 mm Bolts (5) [A]

○Be sure to remove this bolt [B]

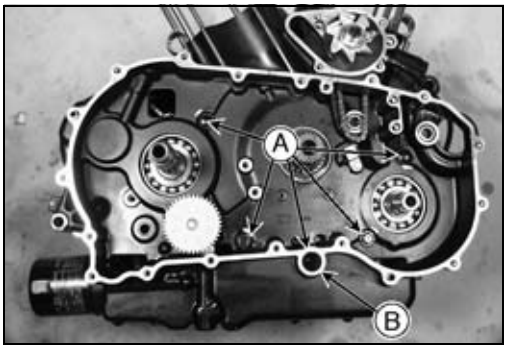

- Remove all the left crankcase bolts in the order listed.
  ϕ6 mm Bolts (14) [A]
  ϕ8 mm Bolt (1) [B]
  ϕ10 mm Bolts (3) [C]



- Using the pry points, split the crankcase halves.
  Pry Point (Front) [A]
  Pry Point (Rear) [B]
- Turn the left crankcase down.
- Lift off the right crankcase.
- Remove the following parts from the left crankcase.
  Crankshaft
  Transmission Gear Assy (see Transmission Removal of the Transmission section)
  Balancer Shaft

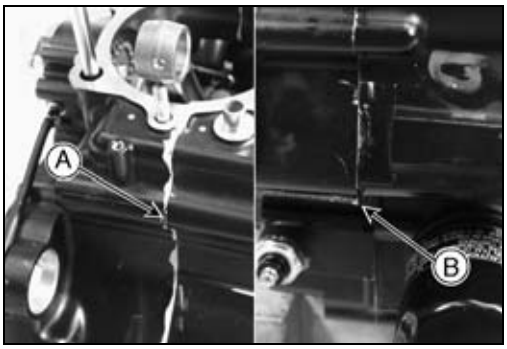

- Pull the water pump sprocket [A] with its chain and shaft [B] out of the inside of the right crankcase.

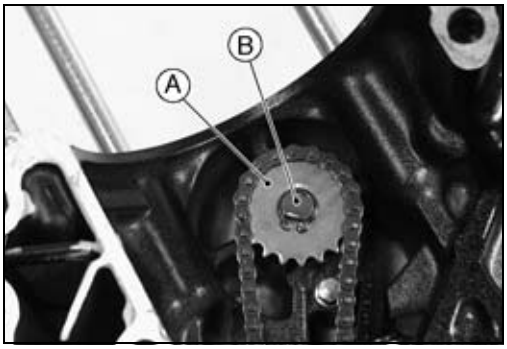

Assembly

CAUTION

The right and left crankcase halves are machined at the factory in the assembled state, so the crankcase halves must be replaced as a set.

- With a high-flash point solvent, clean off the mating surfaces of the crankcase halves and wipe dry.
- Using compressed air, blow out the oil passages in the crankcase halves.

Downloaded from www.vulcanriders-sweden.org

Crankcase

- Support the crankcase bearing boss with a suitable retainer [A].
- Using a press and the bearing driver set [C], install a new bearing [B] by pushing the bearing outer race until it bottoms out.

Special Tool - Bearing Driver Set: 57001-1129

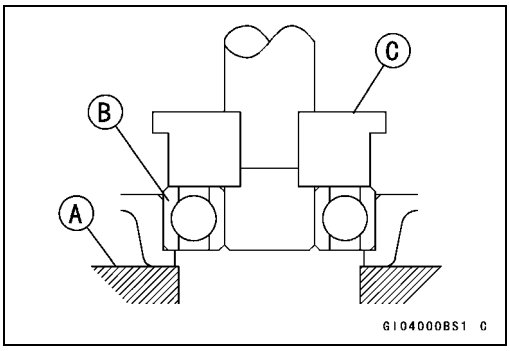

CAUTION

Support the crankcase bearing boss when pushing the bearing, or the crankcase could be damaged.

- Install the bearing retainers.
- Apply a non-permanent locking agent to the bearing retainer bolts and tighten them to the specified torque.

Special Tool - Bearing Driver Set: 57001-1129

Bearings [A]
Bearing Retainer [B]
Left Crankcase [C]

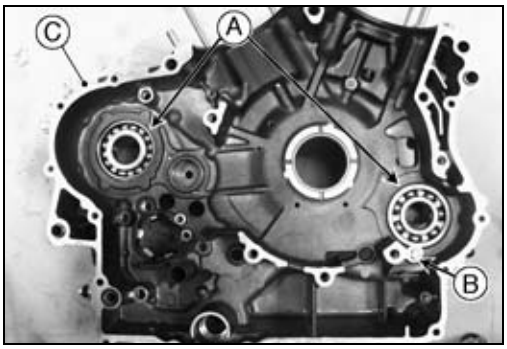

- Tighten:

Torque - Crankcase Bearing Retainer Bolt: 9.8 N·m (1.0 kgf·m, 87 in·lb)

- Install:
  Bearings [A]
  Bearing Retainers [B]
  Right Crankcase [C]
- Tighten:

Torque - Crankcase Bearing Retainer Bolt: 9.8 N·m (1.0 kgf·m, 87 in·lb)

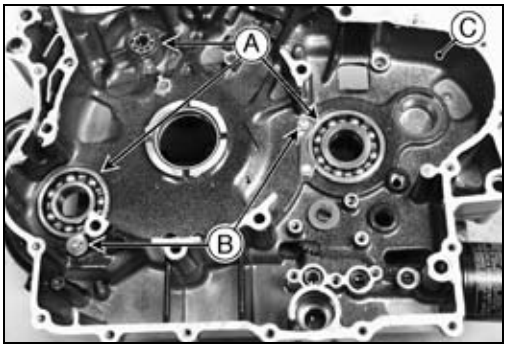

- Apply a non-permanent locking agent to the shift shaft return spring pin [A], and tighten it to the specified torque.

Torque - Shift Shaft Return Spring Pin: 20 N·m (2.0 kgf·m, 14 ft·lb)
Shift Shaft Return Spring Pin: 39 N·m (4.0 kgf·m, 29 ft·lb) (bolt with punch mark)

○Apply silicone sealant to the threads of the oil pressure switch [B], and tighten it to the specified torque.

Torque - Oil Pressure Switch: 15 N·m (1.5 kgf·m, 11 ft·lb)



- Install new water pump shaft bearings and oil seal (see Cooling System chapter).
- Tighten the engine oil drain bolt to the specified torque.

Torque - Engine Oil Drain Bolt: 20 N·m (2.0 kgf·m, 14 ft·lb)

Downloaded from www.vulcanriders-sweden.org

Crankcase

- Install the transmission assy as a set (see Transmission Installation).
- Set the gear set lever to the neutral position.
  Shift Drum Cam [A]
  Gear Set Lever [B]
  Neutral Position [C]

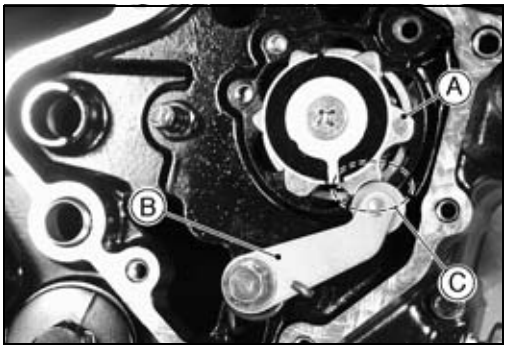

- Apply engine oil to the transmission gears, ball bearings, shift drum, and crankshaft main bearing.
- Install:
  Oil Pipe and Oil Return Pipes (see Engine Lubrication System chapter)
  Crankshaft

○The left shaft [B] of the crankshaft [A] is longer than the right shaft [C].

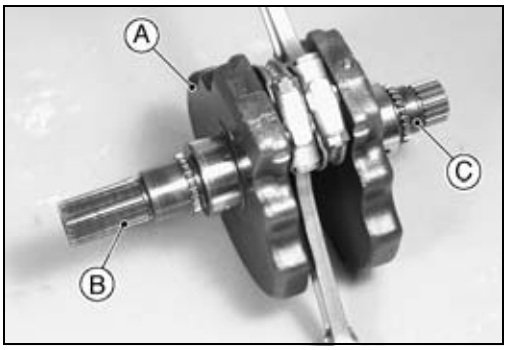

- Check to see that the following parts are in place in the left crankcase.
  Transmission Assy [A]
  Shift Fork [B]
  Shift Rod [C]
  Shift Drum [D]
  Crankshaft [E]
  Front Connecting Rod [F] (right)
  Rear Connecting Rod [G] (left)
  Balancer Shaft [H]
  Dowel Pins [J]
  O-ring [K]
  Oil Separator [L]
  Front [M]

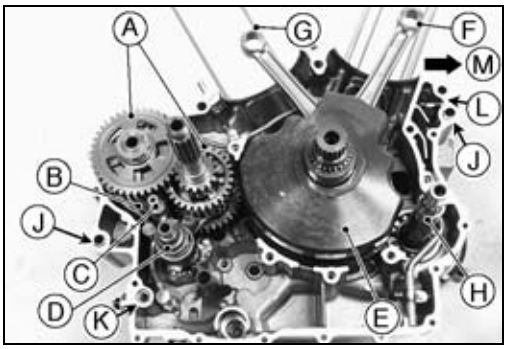

○Install the balancer shaft [A] so that the flanged side [B] faces downward (toward the left crankcase).

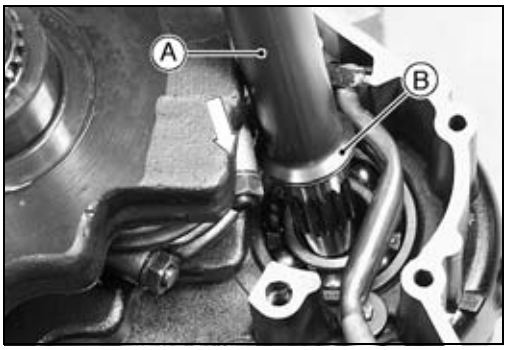

Downloaded from www.vulcanriders-sweden.org

Crankcase

● Check to see that the following parts are in place in the right crankcase.
Oil Pipe [A]
Oil Pump [B]
Separator [C]
Oil Return Pipe [D]

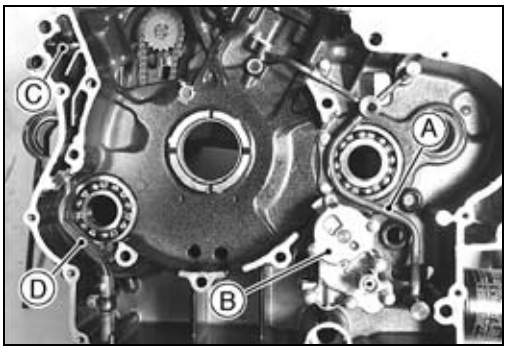

○Apply liquid gasket [A] to the mating surface of the right crankcase.

Sealant - Kawasaki Bond (Liquid Gasket - Black): 92104 -1003

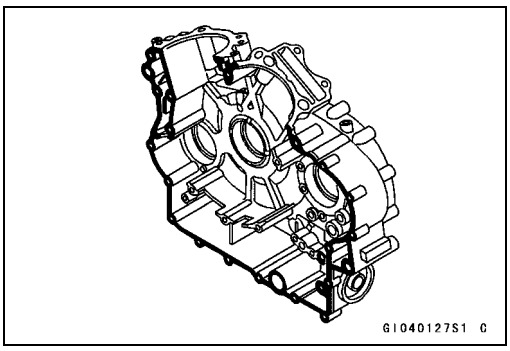

○Also, apply liquid gasket [A] to the right crankcase mating surface around the hole of the oil screen.

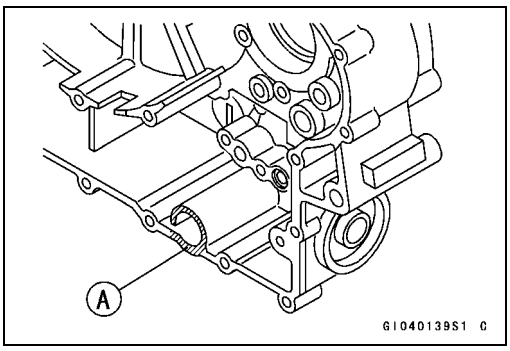

● Tighten the crankcase bolts as follows.
○Lightly tighten all the bolts to a snug fit.
○Tighten the **8 mm** and **10 mm** bolts in the order shown, and then tighten the **6 mm** bolts to the specified torque.

Torque - 8 mm Crankcase Bolts [1 ~ 6]: 21 N·m (2.1 kgf·m, 15 ft·lb)
10 mm Crankcase Bolts [7 ~ 9]: 39 N·m (4.0 kgf·m, 29 ft·lb)
6 mm Crankcase Bolts: 9.8 N·m (1.0 kgf·m, 87 in·lb)

Front [A]

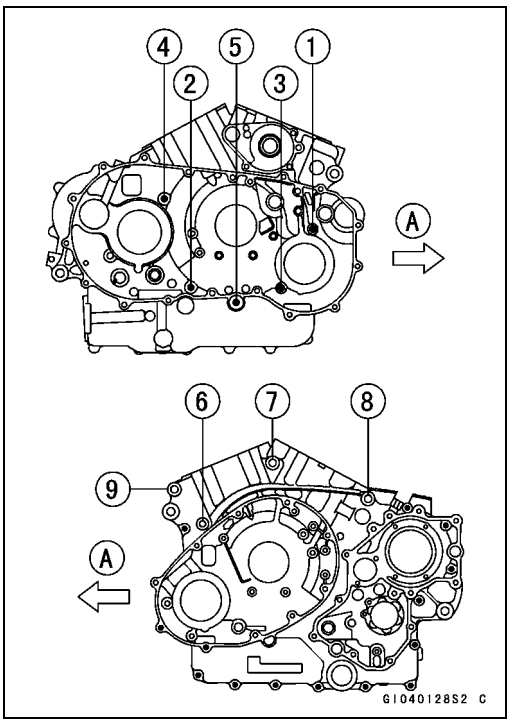

Downloaded from www.vulcanriders-sweden.org

Crankcase

● After tightening all the crankcase bolts, check the following items.

○Turn the right crankcase down, and check that the drive shaft and output shaft turn freely.

○Check that the positive neutral finder operates properly: While spinning the output shaft using an air impact wrench, gears shift smoothly from the 1st, 2nd · · · 5th gear, and 5th, 4th · · · 1st. When the output shaft stays still, the gear can be shifted to only the 1st gear or neutral. It should not be shifted to the 2nd gear or other higher gear positions.

Output Shaft [A]
Shift Drum [B]
Spin the shaft fast [C].

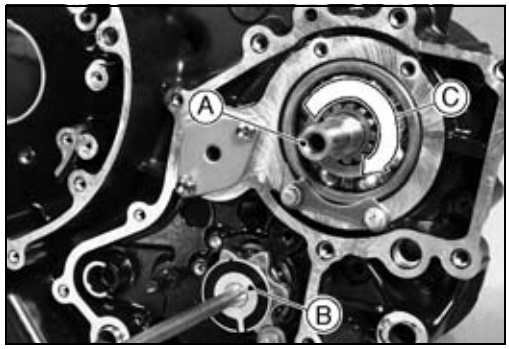

● Install the balancer dampers [A] so that each damper hole [B] is positioned alternately.

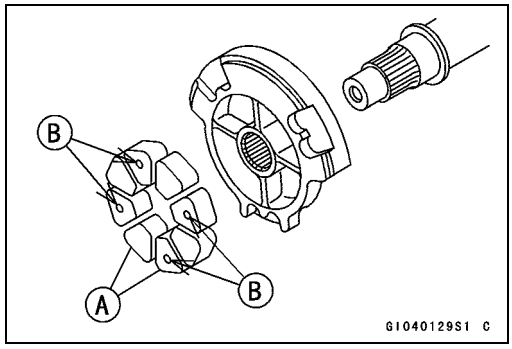

● Install the left balancer [A] on the balancer shaft in the engine left side while fitting the alignment tooth [B] onto the alignment notch [C] of the splines.

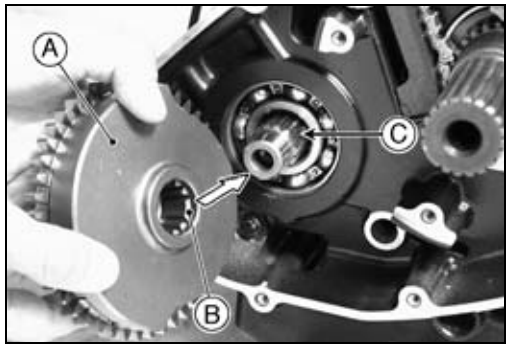

● Install the camshaft chain and chain guide in the engine left side.

● Install the left balancer [A].

● Turn the crankshaft counterclockwise [B] and align the alignment tooth [C] with the middle of the crankcase rib [D]. This makes the front piston set to its top dead center.

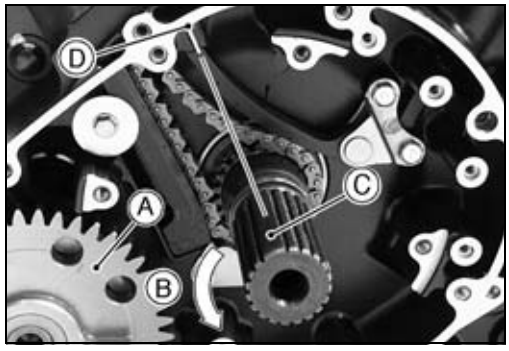

Downloaded from www.vulcanriders-sweden.org

Crankcase

- Install the crankshaft balancer gear [A] while fitting the alignment notch of the splines onto the alignment tooth.
- Install the left balancer [B] while aligning the balancer gear marks (line mark) [C] with the front piston on its top dead center.
- Install (see Electrical System chapter):
  Inside Stator Coil
  Alternator Rotor

○Install the alternator rotor while fitting the alignment notch of the splines onto the alignment tooth.

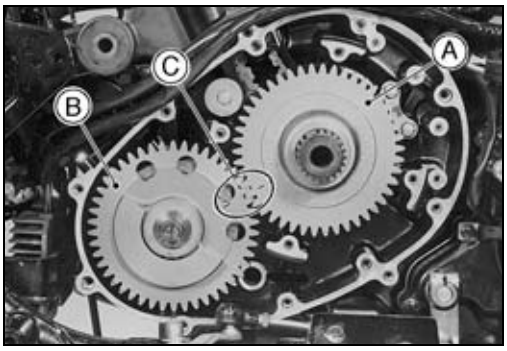

○When the front piston is set on its top dead center, balancer marks [A] (shorter marks) should align.
  Top Mark for Rear Piston [B] (longer mark)
  Top Mark for Front Piston [C] (longer mark)

- Apply molybdenum disulfide oil to the threads and the seating surface of the left balancer gear bolt, starter clutch bolt, and alternator rotor bolt.
- Tighten:

Torque - Left Balancer Gear Bolt,Starter Clutch Bolt: 85 N·m (8.7 kgf·m, 63 ft·lb)
Alternator Rotor Bolt: 78 N·m (8.0 kgf·m, 57 ft·lb)

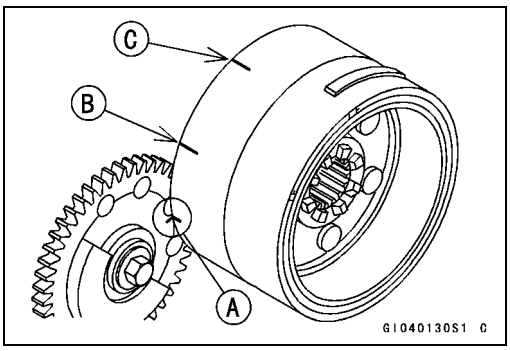

- Install the following parts in the engine right side.
  Camshaft Chain and Chain Guides
  Starter Clutch (Right Balancer)
  Washer [A] and Idle Shaft Sprocket [B]
- Apply:

Non-permanent Locking Agent - Camshaft Chain Guide Bolts

- Tighten:

Torque - Camshaft Chain Guide Bolts: 9.8 N·m (1.0 kgf·m, 87 in·lb)

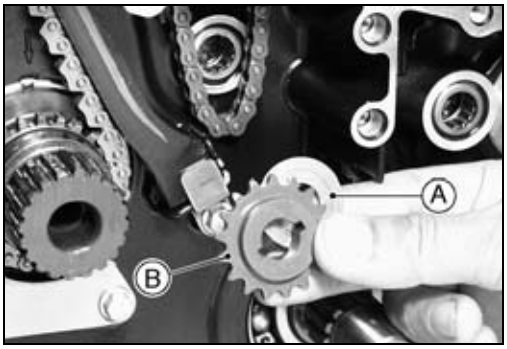

○Install the primary gear [A] with the boss [B] facing toward the engine inside.

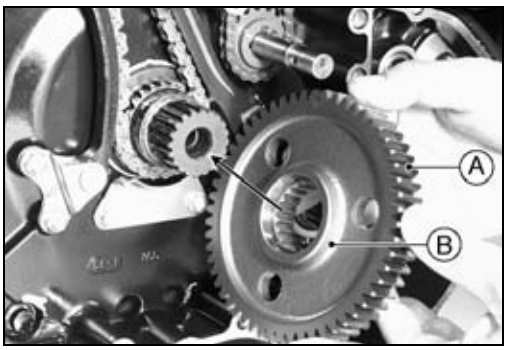

Downloaded from www.vulcanriders-sweden.org

Crankcase

○Install:
Water Pump Idle Shaft
Idle Shaft Sprocket [A]
Water Pump Drive Sprocket [B] and Chain [C]
Washer [D]
○Install two pins into the water pump idle shaft.
○Fit the pins into the slots of the idle shaft drive sprocket boss.

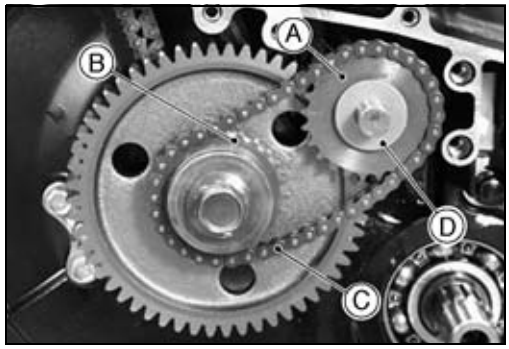

● Install the breather plate [A].
Front [B]

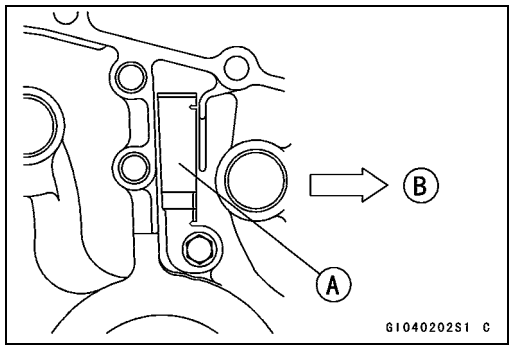

○Install:
Idle Shaft Holder [A] and Water Pump Chain Guide [B]
Lock Washer [C]
Torque Limiter [D]
Washer [E]
Starter Clutch Gear [F]
Turn clockwise [G].
● Tighten:

Torque - Water Pump Chain Guide Bolt, Idle Shaft Holder Bolts: 7.8 N·m (0.80 kgf·m, 69 in·lb)

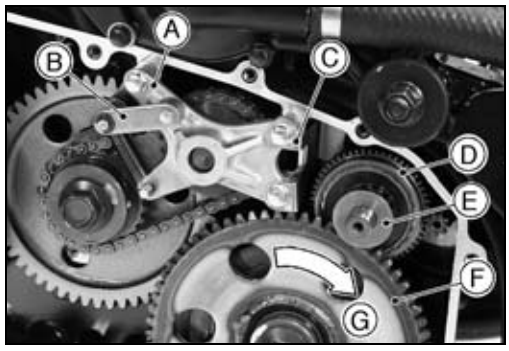

● Install:
Shift Mechanism (see External Shift Mechanism Removal)
Damper Cam and Front Gear Case (see Final Drive chapter)
Clutch (see Clutch chapter)
Water Pump (see Cooling System chapter)
Clutch Cover
Engine Top End (see Engine Top End chapter)
Alternator Inner Cover (see Electrical System chapter)
Alternator Cover (see Electrical System chapter)
Alternator Outer Cover (see Electrical System chapter)
● Apply:

Molybdenum Disulfide Oil -
Threads of Damper Cam Nut
Threads and Seating Surface of Clutch Hub Nut

● Tighten:

Torque - Damper Cam Nut: 196 N·m (20.0 kgf·m, 145 ft·lb)
Clutch Hub Nut: 147 N·m (15.0 kgf·m, 108 ft·lb)

Downloaded from www.vulcanriders-sweden.org

Crankshaft/Connecting Rods

Connecting Rod Removal

- Remove the crankshaft.
- Remove the connecting rod big end nuts, and take off the rod and cap along with the bearing inserts from the crankshaft [A].

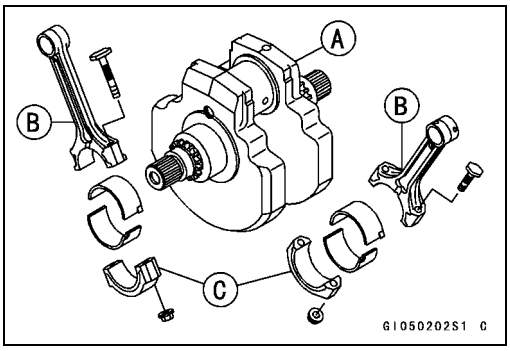

NOTE

○*Mark and record the locations of the connecting rods [B] and their big end caps [C] with the bearing inserts left attached so that they can be installed in their original positions.*

CAUTION

To prevent damage to the crankpin surfaces, do not allow the connecting rod bolts to bump against the crankpins.

Connecting Rod Installation

CAUTION

To minimize vibration, the connecting rods should have the same weight mark.

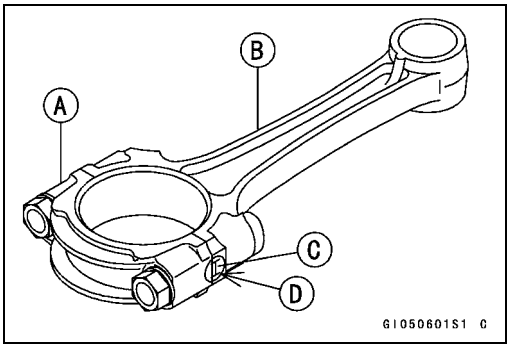

Big End Cap [A]
Connecting Rod [B]
Weight Mark, Alphabet [C]
Diameter Mark (Around Weight Mark) [D]: "○" or no mark

CAUTION

If the connecting rods, bearing inserts, or crankshaft are replaced with new ones, select the bearing insert and check clearance with a plastigage before assembling engine to be sure the correct bearing inserts are installed.

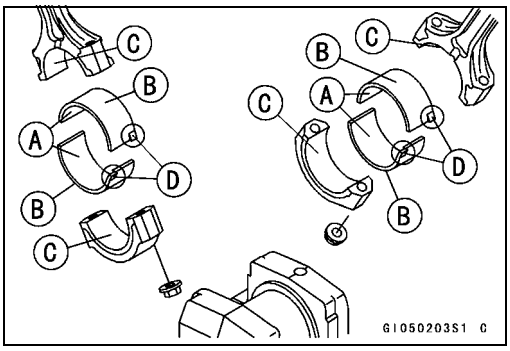

- Apply molybdenum disulfide oil to the inside [A] of the big end bearing inserts.

★If bearing inserts are replaced, install them as follows.

○Do not appy molybdenum disulfide oil to the outside [B] of the inserts or the inside [C] of the connecting rod and cap.

○Install the inserts so that their nails [D] are on the same side and fit into the recess of the connecting rod and cap.

Downloaded from www.vulcanriders-sweden.org

Crankshaft/Connecting Rods

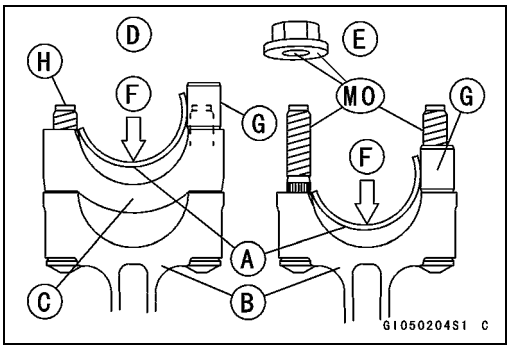

○When installing the inserts [A], be careful not to damage the insert surface with the edge of the connecting rod [B] or the cap [C]. One way to install inserts is as follows:
Installation [D] to Cap
Installation [E] to Connecting Rod
Push [F]
Dowel Pin [G]
Connecting Rod Bolts [H]

- Install the cap on the connecting rod, aligning the weight and diameter marks.
- Remove debris and clean the surface of inserts.
- Apply molybdenum disulfide oil [MO] to the threads and seating surface of the big end nuts.
- Tighten the big end nuts to the specified torque.

Torque - Connecting Rod Big End Nuts: 59 N·m (6.0 kgf·m, 43 ft·lb)

Crankshaft/Connecting Rod Cleaning

- After removing the connecting rods from the crankshaft, clean them with a high-flash point solvent.
- Blow the crankshaft oil passages with compressed air to remove any foreign particles or residue that may have accumulated in the passages.

Connecting Rod Bend Inspection

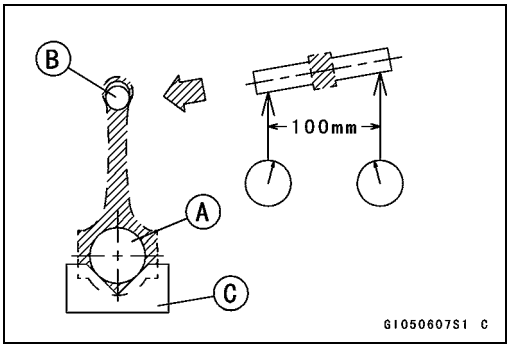

- Remove the connecting rod big end bearing inserts, and reinstall the connecting rod big end cap.
- Select an arbor [A] of the same diameter as the connecting rod big end, and insert the arbor through the connecting rod big end.
- Select an arbor of the same diameter as the piston pin and at least 100 mm long, and insert the arbor [B] through the connecting rod small end.
- On a surface plate, set the big-end arbor on a V block [C].
- With the connecting rod held vertically, use a height gauge to measure the difference in the height of the arbor above the surface plate over a 100 mm length to determine the amount of connecting rod bend.

★If connecting rod bend exceeds the service limit, the connecting rod must be replaced.

Connecting Rod Bend
Service Limit: TIR 0.2/100 mm (0.008/3.94 in.)

Connecting Rod Twist Inspection

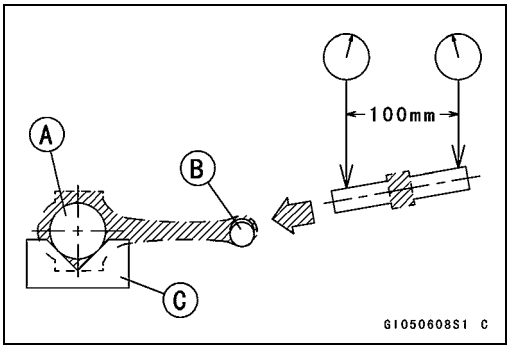

- With the big-end arbor [A] still on the V block [C], hold the connecting rod horizontally and measure the amount that the arbor [B] varies from being parallel with the surface plate over a 100 mm length of the arbor to determine the amount of connecting rod twist.

★If connecting rod twist exceeds the service limit, the connecting rod must be replaced.

Connecting Rod Twist
Service Limit: TIR 0.2/100 mm (0.008/3.94 in.)

Downloaded from www.vulcanriders-sweden.org

Crankshaft/Connecting Rods

Connecting Rod Big End Side Clearance Inspection

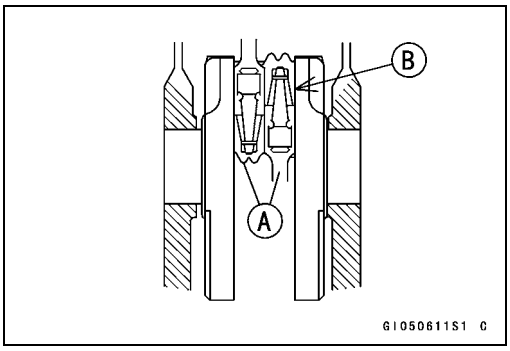

- Measure the side clearance [B] of the connecting rod big end [A].

○Insert a thickness gauge between the big end and either crank web to determine clearance.

Connecting Rod Big End Side Clearance
Standard: 0.16 ~ 0.46 mm (0.0063 ~ 0.0181 in.)
Service Limit: 0.7 mm (0.028 in.)

★If the clearance exceeds the service limit, replace the connecting rod with new one and then check clearance again. If clearance is too large after connecting rod replacement, the crankshaft also must be replaced.

Connecting Rod Big End Bearing Wear Inspection

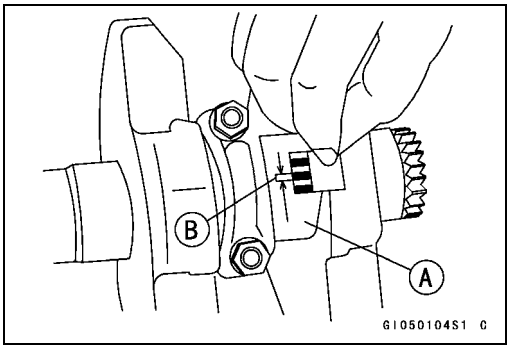

- Remove the big end cap and place a strip of plastigage on the crankpin [A].
- Apply:

Molybdenum Disulfide Oil -
Threads and Seating Surface of Big End Nuts

- Tighten the big end nuts to the specified torque to compress the plastigage and measure the plastigage width [B] to determine the bearing insert/crankpin clearance (see Camshaft/Rocker Case Wear in the Engine Top End chapter).

Torque - Connecting Rod Big End Nuts: 59 N·m (6.0 kgf·m, 43 ft·lb)

○Do not move the connecting rod and crankshaft during clearance measurement.

Connecting Rod Big End Bearing/Crankpin Clearance
Standard: 0.026 ~ 0.057 mm (0.0010 ~ 0.0022 in.)
Service Limit: 0.10 mm (0.004 in.)

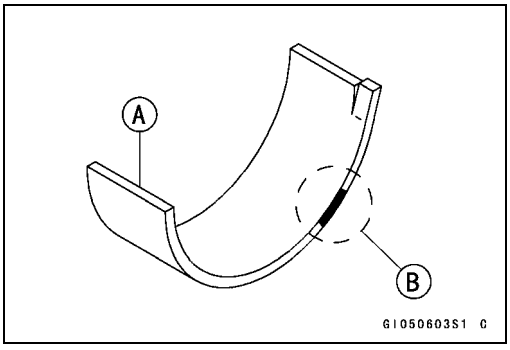

★If the clearance is within the standard, no bearing insert replacement is required.

★If the clearance is between 0.057 mm and the service limit (0.10 mm), replace the bearing inserts [A] with inserts painted blue [B]. Check insert/crankpin clearance with plastigage. The clearance may exceed the standard slightly, but it must not be less than the minimum in order to avoid bearing seizure.

Downloaded from www.vulcanriders-sweden.org

Crankshaft/Connecting Rods

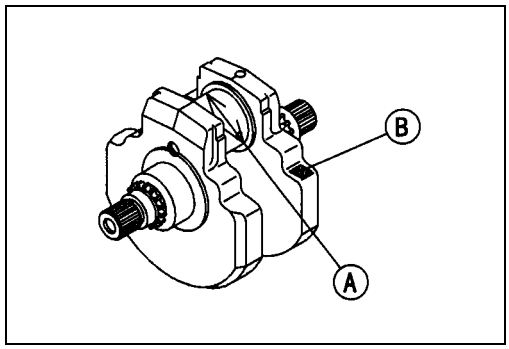

★If the clearance exceeds the service limit, measure the diameter of the crankpin [A].

Crankpin Diameter
Standard: 54.981 ~ 55.000 mm (2.1646 ~ 2.1650 in.)
Service Limit: 54.97 mm (2.164 in.)

★If the crankpin has worn past the service limit, replace the crankshaft with a new one.

★If the measured crankpin diameter is not less than the service limit, but does not coincide with the original diameter marking on the crankshaft, make a new mark on it.

Crankpin Diameter Marks
None: 54.981 ~ 54.991 mm (2.1646 ~ 2.1650 in.)
○: 54.992 ~ 55.000 mm (2.1650 ~ 2.1654 in.)

Crankpin Diameter Mark: "○" mark or no mark [B]

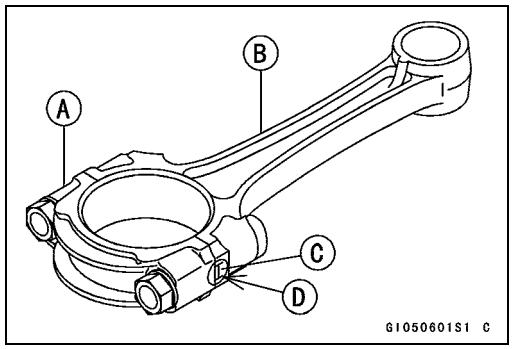

● Apply:
Molybdenum Disulfide Oil -
Threads and Seating Surface of Big End Nuts

● Temporarily, install the big end cap and tighten the big end nuts to the specified torque.

Torque - Connecting Rod Big End Nuts: 59 N·m (6.0 kgf·m, 43 ft·lb)

● Measure the connecting rod big end inside diameter, and mark each connecting rod big end in accordance with the inside diameter.

○The mark already on the big end should almost coincide with the measurement because of little wear.

Connecting Rod Big End Inside Diameter Marks
None: 58.000 ~ 58.010 mm (2.2835 ~ 2.2839 in.)
○: 58.011 ~ 58.020 mm (2.2839 ~ 2.2842 in.)

Big End Cap [A]
Connecting Rod [B]
Weight Mark, Alphabet [C]
Diameter Mark (around weight mark) [D]: "○" or no mark

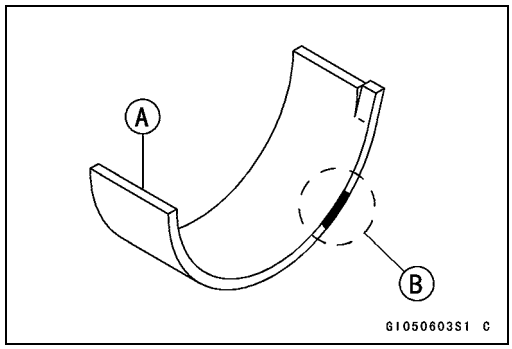

● Select the proper bearing insert [A] identified by the size color [B] in accordance with the combination of the connecting rod and crankshaft coding.

Big End Bearing Insert Selection

Con-rod Big End Bore Diameter Marking	Crankpin Diameter Mark	Bearing Insert	
		Size Color	Part Number
None	○	Brown	92028-1476
None	None	Black	92028-1475
○	○		
○	None	Blue	92028-1474

● Install the new inserts in the connecting rod and check insert/crankpin clearance with the plastigage.

Downloaded from www.vulcanriders-sweden.org

Crankshaft/Connecting Rods

Crankshaft Runout Inspection

- Measure the crankshaft runout.

★If the measurement exceeds the service limit, replace the crankshaft.

Crankshaft Runout
Standard: TIR 0.02 mm (0.0008 in.)
Service Limit: TIR 0.05 mm (0.002 in.)

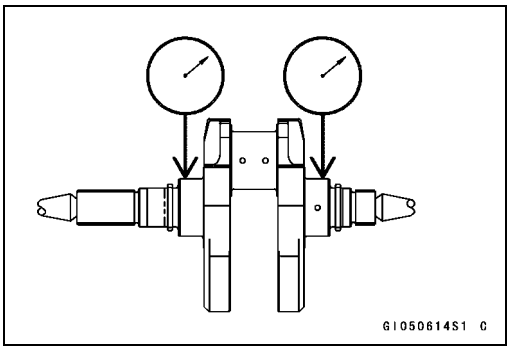

Crankshaft Main Bearing/Journal Wear Inspection

- Measure the diameter [A] of the crankshaft main journal.

Crankshaft Main Journal Diameter
Standard: 54.986 ~ 55.000 mm (2.1678 ~ 2.1654 in.)
Service Limit: 54.96 mm (2.164 in.)

★If any journal has worn past the service limit, replace the crankshaft with a new one.

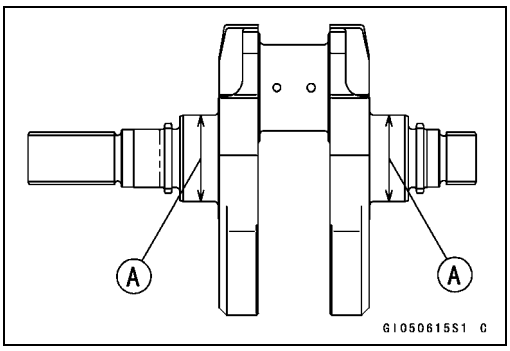

- Measure the main bearing bore diameter [A] in the crankcase halves.

Crankcase Main Bearing Bore Diameter
Standard: 55.025 ~ 55.038 mm (2.1663 ~ 2.1668 in.)
Service Limit: 55.07 mm (2.168 in.)

★If they are any signs of seizure, damage, or excessive wear, replace the crankcase halves as a set.

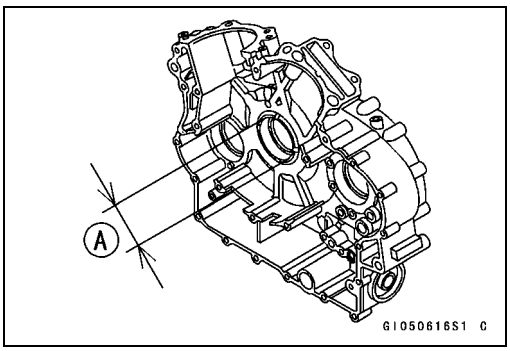

Crankshaft Side Clearance Inspection

- Measure the crankshaft side clearance.

Crankshaft Side Clearance
Standard: 0.05 ~ 0.55 mm (0.0020 ~ 0.0217 in.)
Service Limit: 0.75 mm (0.0295 in.)

Crankshaft [A]
Crankcase [B]
Clearance [C]

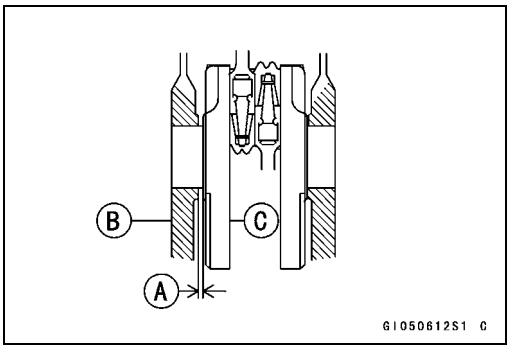

★If the clearance is greater than the service limit, measure the crankshaft web length [A] to see whether the crankshaft or the crankcase is faulty.

Crankshaft Web Length
Standard: 96.85 ~ 96.95 mm (3.813 ~ 3.817 in.)
Service Limit: 96.6 mm (3.803 in.)

★If the length measurement is smaller than the service limit, replace the crankshaft. Otherwise, replace the crankcase halves as a set.

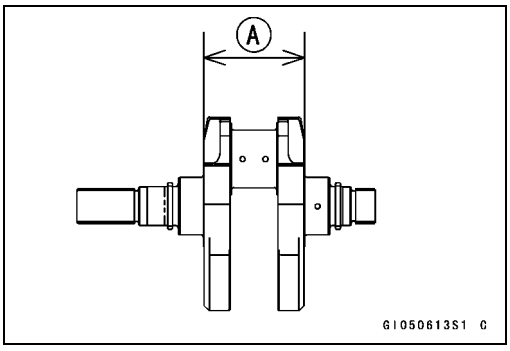

CAUTION

The right and left crankcase halves are machined at the factory in the assembled state, so they must be replaced as a set.

Downloaded from www.vulcanriders-sweden.org

Starter Clutch

Removal

- Remove the clutch cover (see Clutch chapter).
- Unscrew the starter clutch bolt [A] while holding the primary gear bolt [B].
- Pull the starter clutch gear and starter clutch along with the right balancer as a set off the balancer shaft.
- Remove the torque limiter [C].



Installation

- Fit the alignment tooth [A] of the splines of the right balancer [B] onto the alignment notch of the balancer shaft.



- Install the collar [A], copper washer [B], and needle bearing [C] in the order listed.

○The copper washer must be on the collar.



- Push the starter clutch gear [A] in and turn it clockwise [B] and install it.
- Apply molybdenum disulfide oil to the threads and seating surface of the starter clutch bolt and tighten it to the specified torque while holding the primary gear bolt.

  Torque - Starter Clutch Bolt: 85 N·m (8.7 kgf·m, 63 ft·lb)
- Be sure to install the washer [C] onto the torque limiter.

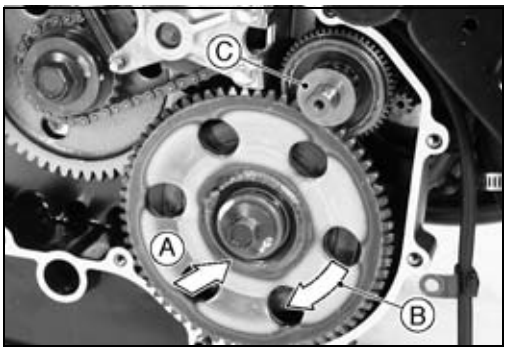

Disassembly

- Remove the starter clutch assy.
- Remove the Allen bolts [A] with the balancer [B] held with the flywheel holder (special tool).

  Special Tool - Flywheel Holder: 57001-1313

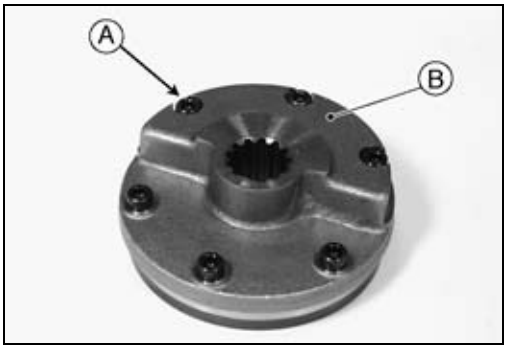

Downloaded from www.vulcanriders-sweden.org

Starter Clutch

- Pull the coupling [A] out of the right balancer [B].
- Take the one-way clutch [C] out of the coupling.
  Starter Clutch Gear [D] (for reference)

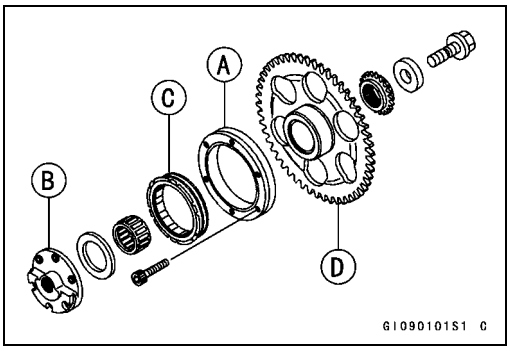

Assembly

- Install the one way clutch [A] so that its groove [B] faces outward and its flange [C] fits between the right balancer [D] and the coupling [E].
- Apply a non-permanent locking agent to the threads of the coupling bolts, and tighten them to the specified torque.

Torque - Starter Clutch Coupling Bolts: 15 N·m (1.5 kgf·m, 11 ft·lb)

Special Tool - Flywheel Holder: 57001-1313

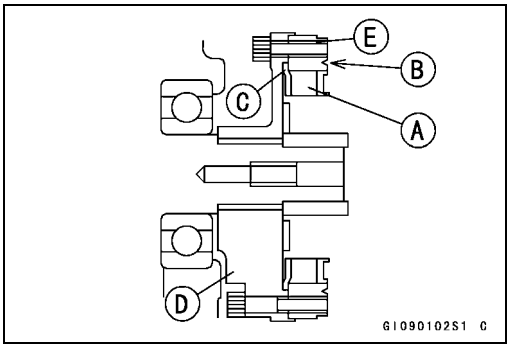

Inspection

- Remove the starter clutch gear [A] and torque limiter, then reinstall the starter clutch gear into the starter clutch.
- Turn the starter clutch to both side.

○When viewed from the right side of the engine, the clutch should turn clockwise [B] freely, but should not turn counterclockwise [C].

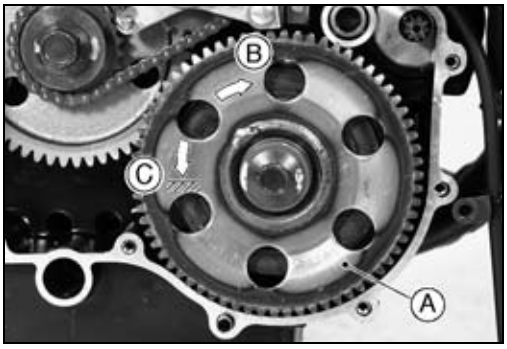

★If the starter clutch does not operate as it should or if it makes noise, disassemble the starter clutch.

★If one-way clutch [A] installation is wrong, reinstall it.

★Visually inspect the one-way clutch, coupling and starter clutch gear for damage.

★If there is any worn or damaged surface in the following parts, replace it.
  Sliding Surface [B] and Cage of One-way Clutch
  Sliding Surface [C] of Starter Clutch Gear

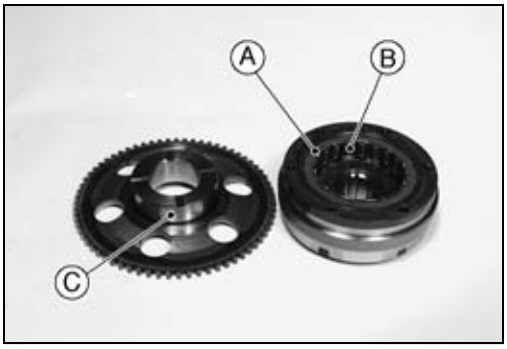

  Sliding Surface [A] of Coupling

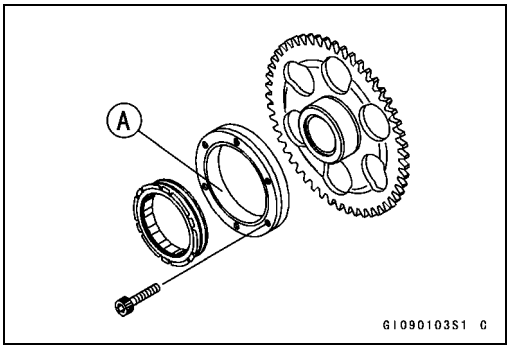

Downloaded from www.vulcanriders-sweden.org

Starter Torque Limiter

Removal

- Remove the clutch cover (see Clutch chapter).
- Remove the starter clutch gear [A].
- Pull the torque limiter [B] out of the right crankcase.

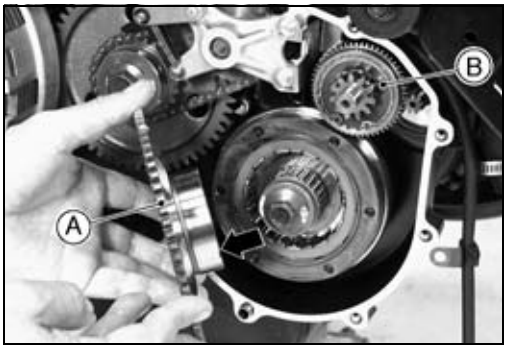

CAUTION
Do not disassemble the torque limiter. The torque limiter will be damaged.

Inspection

- Remove the torque limiter and visually inspect it.

★If the limiter has wear, discoloration, or other damage, replace it as a set.

Gear [A]
Friction Plates [B]
Spring [C]
Pinion [D]

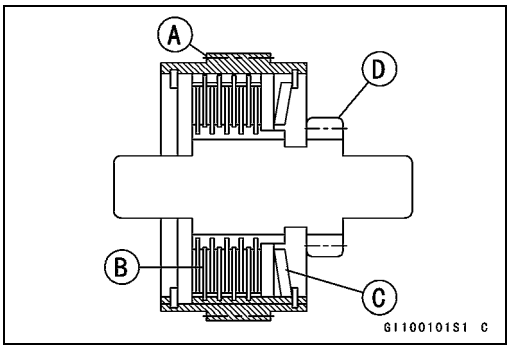

Downloaded from www.vulcanriders-sweden.org

Water Pump Idle Shaft Holder

Removal

- Remove the clutch cover (see Clutch chapter).
- Remove:
  Starter Clutch Gear (see Starter Clutch Removal)
  Starter Torque Limiter (see Starter Torque Limiter Removal)
- Take the end of the spring [A] off the hook.
- Unscrew the bolts [B] and take the idle shaft holder [C] with the chain guide [D] out of the crankcase.
- Pull out the chain guide from the holder.

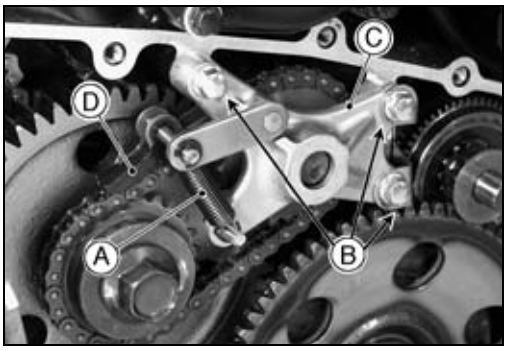

Installation

- Put the washer [B] onto the idle shaft [A], and fit the dowel pins [C] into the crankcase.
- Install the idle shaft holder and lock washer.
- Tighten:

Torque - Idle Shaft Holder Bolts: 7.8 N·m (0.80 kgf·m, 69 in·lb)

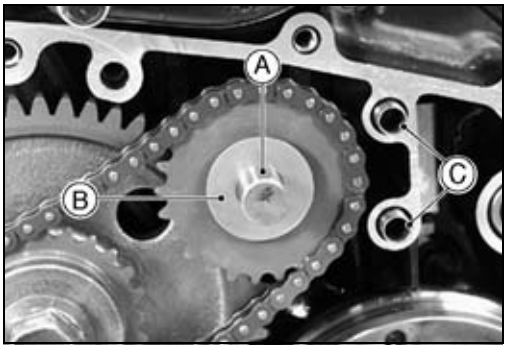

Downloaded from www.vulcanriders-sweden.org

Primary Gear

Removal

- Remove:
  Clutch Cover (see Clutch chapter)
  Starter Clutch Gear (see Starter Clutch Removal)
  Starter Torque Limiter (see Starter Torque Limiter Removal)
  Clutch (see Clutch chapter)
- Remove the water pump chain guide [A] and water pump idle shaft holder [B] from the right crankcase.



- Using an air impact wrench or holding the alternator rotor bolt (remove the rotor bolt plug), remove the primary gear bolt [A], water pump drive sprocket [B], idle shaft [C], and idle shaft sprocket [D].
  Water Pump Chain [E]

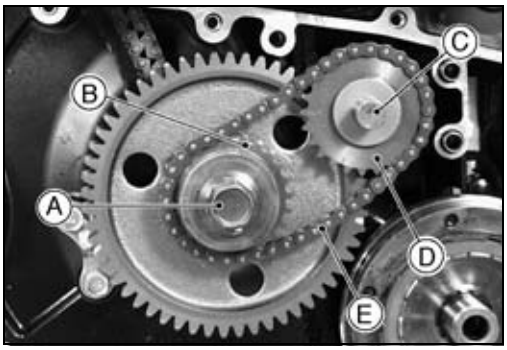

- Pull the primary gear out of the crankshaft, and take the pins [A] out of the idle shaft [B].

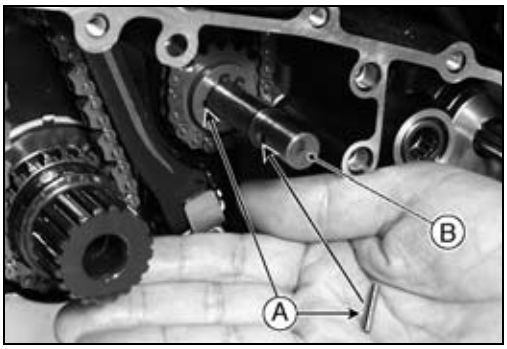

Installation

- Fit the primary gear [A] with the boss [B] facing toward the engine inside.
- Install two pins into the water pump idle shaft.
- Fit the pins into the slots of the water pump drive sprocket boss and install the sprocket.
- Install the clutch (see Clutch chapter).



- Apply molybdenum disulfide oil to the threads and seating surface, and tighten the primary gear bolt [A] to the specified torque, while holding the primary gear [B] with the gear holder [C].

  Special Tool - Gear Holder, m1.75: 57001-1015

  Torque - Primary Gear Bolt: 147 N·m (15.0 kgf·m, 108 ft·lb)

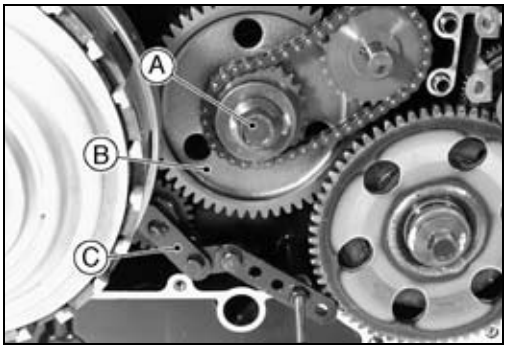

Downloaded from www.vulcanriders-sweden.org

Transmission

Shift Pedal Removal

- Unscrew the footboard bracket bolts [A] and take off the left front footboad [B].
  Front [C]

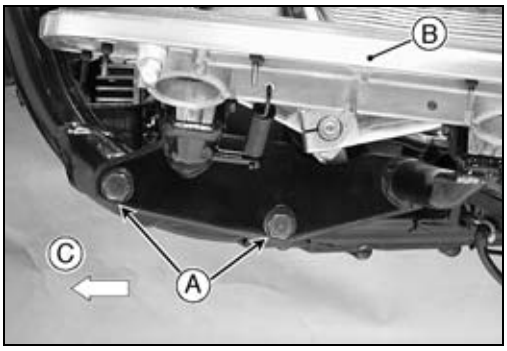

- Unscrew the clamp bolt [A] and pull out the rear shift pedal [B].
- Unscrew the clamp bolt [C] and pull out the front shift pedal [D].

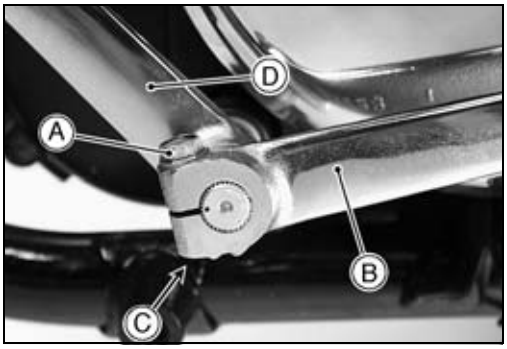

Front Shift Pedal Installation

- Install the front shift pedal [A] so that the punched mark on the shaft is aligned [B] with the punched mark on the pedal.
- Tighten the clamp bolt (the head is numbered 10).

Torque - Front Shift Pedal Clamp Bolt: 17 N·m (1.7 kgf·m, 12 ft·lb)

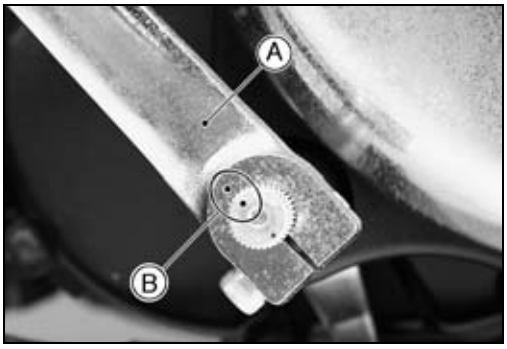

Rear Shift Pedal Installation

- Install the rear shift pedal [A] so that the punched mark on the shaft is aligned [B] with the punched mark on the pedal.
- Tighten the clamp bolt (the head is numbered 10) of the rear shift pedal.

Torque - Rear Shift Pedal Clamp Bolt: 17 N·m (1.7 kgf·m, 12 ft·lb)

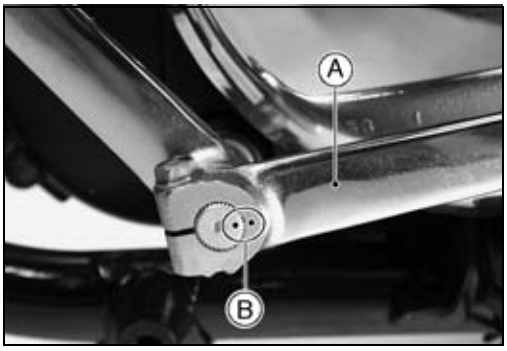

External Shift Mechanism Removal

- Remove:
  Front and Rear Shift Pedals (see Shift Pedal Removal)
  Alternator Outer Cover (see Electrical System chapter)
  Engine (see Engine Removal/Installation chapter)
  Front and Rear Shift Levers [A]
  Front Gear Case [B] (see Final Drive chapter)

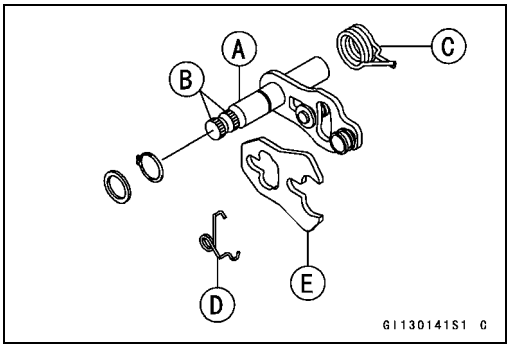

Downloaded from www.vulcanriders-sweden.org

Transmission

- Remove the shift shaft [A] while pushing [B] the shift mechanism arm [C] towards the shift shaft.
- Unscrew the bolt and remove the gear set lever [D] and its spring.

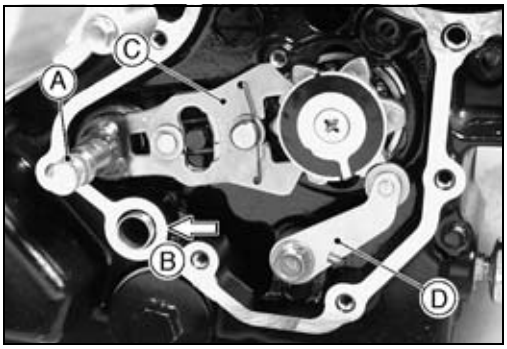

External Shift Mechanism Installation

- Install the gear set lever [A] and the spring [B] in the crankcase and tighten the bolt [C].
- Install the shift mechanism arm assy. Be sure to install the washer onto the shift shaft.
- Install the front gear case (see Final Drive chapter).



- Install the front shift lever and the rear shift lever.

○Install the rear shift lever [A] on the shift shaft so that the punched mark on the shaft is aligned [B] with the slot of the rear shift lever.

- Loosen the locknuts [C] and turn the shift rod [D] so that the outside length [E] of the locknuts is **112 ±1 mm (4.41 ±0.04 in.)**.

Front [F]

○The rear locknut has left-hand threads.

- Tighten:

Torque - Rear Shift Lever Clamp Bolt, Shift Rod Locknuts: 9.8 N·m (1.0 kgf·m, 87 in·lb)

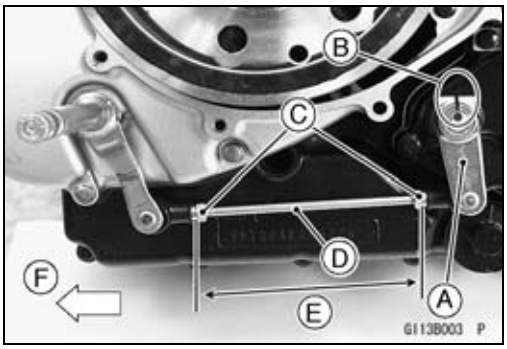

- Install the clutch hose guide and grommet.
- Install the engine (see Engine Removal/Installation).

External Shift Mechanism Inspection

- Examine the shift shaft [A] for any damage.

★If the shaft is bent, straighten or replace it.

★If the serrations [B] are damaged, replace the shaft.

★If the springs [C] [D] are damaged in any way, replace them.

★If the shift mechanism arm [E] is damaged in any way, replace the arm.

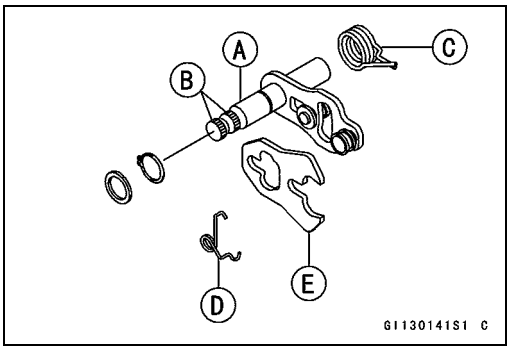

Downloaded from www.vulcanriders-sweden.org

Transmission

- Check the return spring pin [A] is not loose.

★If it is loose, unscrew it, apply a non-permanent locking agent to the threads, and tighten it.

Torque - Shift Shaft Return Spring Pin: 20 N·m (2.0 kgf·m, 14 ft·lb)
Shift Shaft Return Spring Pin: 39 N·m (4.0 kgf·m, 29 ft·lb) (bolt with punch mark)

- Check the gear set lever [B], and its spring [C] for breaks or distortion.

★If the lever or spring is damaged in any way, replace it.

- Visually inspect the shift drum pins, pin holder, and pin plate.

★If they are badly worn or if they show any damage, replace them.

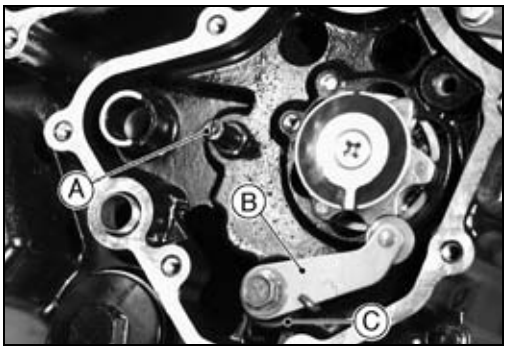

Transmission Removal

- Remove the engine (see Engine Removal/Installation chapter).
- Split the crankcase (see Crankcase Disassembly).
- Remove the crankshaft.
- First, remove the oil pipe [A] (see Engine Lubrication System chapter), and then remove the shift drum bearing holder bolts and holder [B].
- Pull out the shift rod [C] and take the shift fork [D] out of the output shaft 4th gear.

Output Shaft [E]
Drive Shaft [F]
Shift Drum [G]

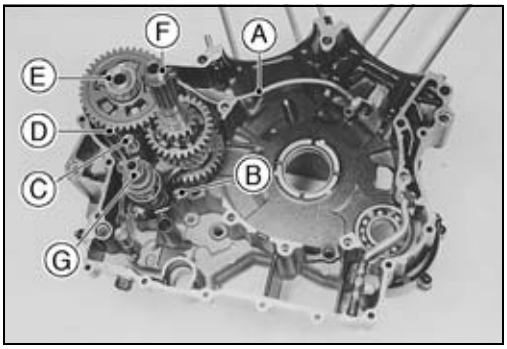

- Align the shift drum cam [A] with the cutoff [B] of the left crankcase by turning the shift drum.

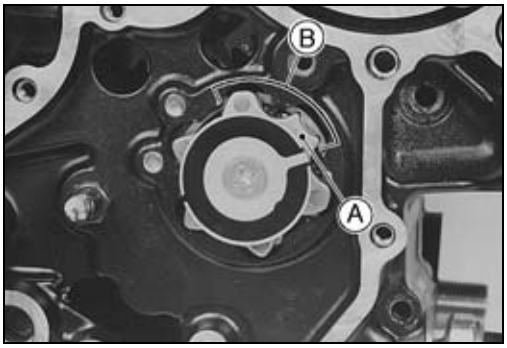

- Take out the transmission shafts [A] and shift drum [B] as a set.
- Separate the drive and output shafts, shift drum, and shift forks.

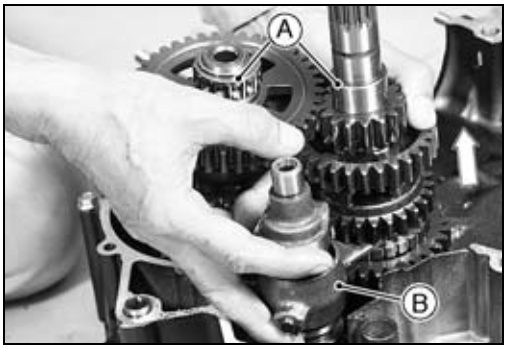

Downloaded from www.vulcanriders-sweden.org

Transmission

Transmission Installation

- Install the drive and output shaft assy, shift drum, and output shaft 5th gear shift fork as a set.
  Drive Shaft Assy [A]
  Output Shaft Assy [B]
  Shift Fork (Drive, 3rd Gear) and Shift Drum Assy [C]
  Shift Fork (Output, 5th Gear) [D]

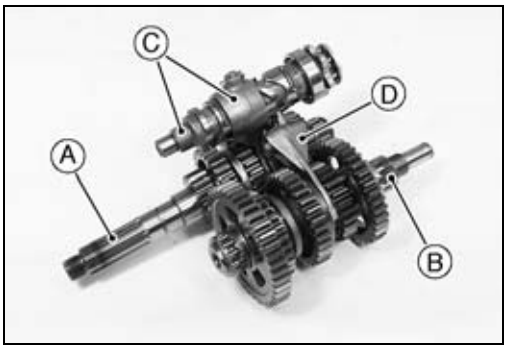

○Each output shaft shift fork has an identification number. Do not confuse them.

- Install them as shown.
  Shift Fork (No-270), 5th Gear [A]
  Shift Fork (No-269 or No-293), 4th Gear [B]
  Toward the left crankcase [C].

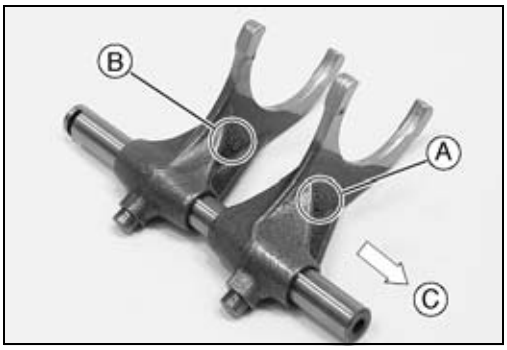

- Apply a non-permanent locking agent to the shift drum bearing holder bolts.
- Tighten:

  Torque - Shift Drum Bearing Holder Bolts: 9.8 N·m (1.0 kgf·m, 87 in·lb)

- Install:
  Shift Drum Bearing Holder [A]
  Bolts [B]
- Apply engine oil to the shift rod, the shift forks, and gears.

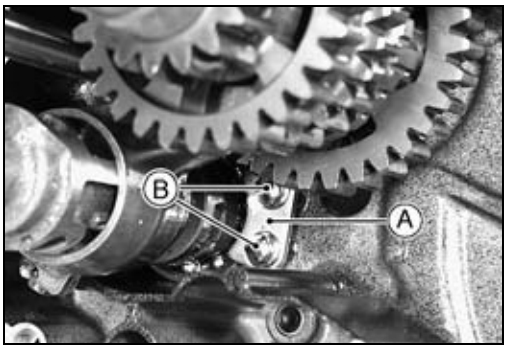

- Install:
  Shift Fork (Output, 4th Gear) [A]
  Shift Rod [B]



Shift Drum Disassembly/Assembly

- Remove the shift drum assy [A] (see Transmission Removal).
- Remove:
  Drive Shaft Shift Fork (No-268 or No292) [B]
  Cotter Pin [C]

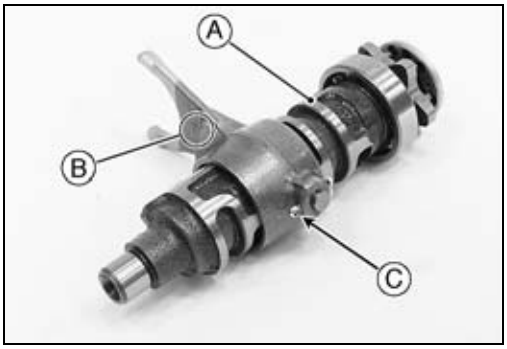

Downloaded from www.vulcanriders-sweden.org

Transmission

- Disassemble the shift drum assy as shown.
  Pin Plate [A]
  Pin [B]
  Cam [C]
  Bearing [D]
  Shift Drum [E]
  Drive Shaft Shift Fork (No-268) [F]
  Cotter Pin [G]
- Apply a non-permanent locking agent to the threads of the shift drum cam screw [H].

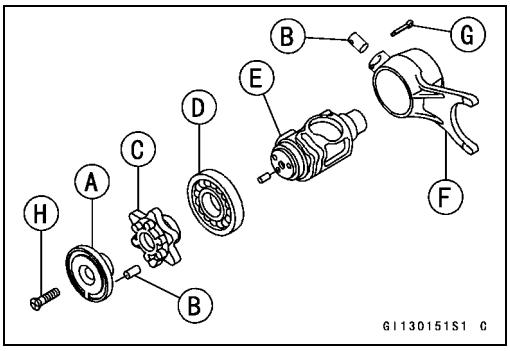

Transmission Disassembly

- Remove the transmission shafts (see Transmission Removal).
- Using the circlip pliers (special tool), remove the circlips, and disassemble the transmission shaft.

Special Tool - Outside Circlip Pliers: 57001-144

- The 4th gear [A] on the output shaft has three steel balls for the positive neutral finder mechanism.
- Remove the 4th gear as follows.

○Set the output shaft in a vertical position holding the 3rd gear [B].
○Spin the 4th gear quickly [C] and pull it off upward.

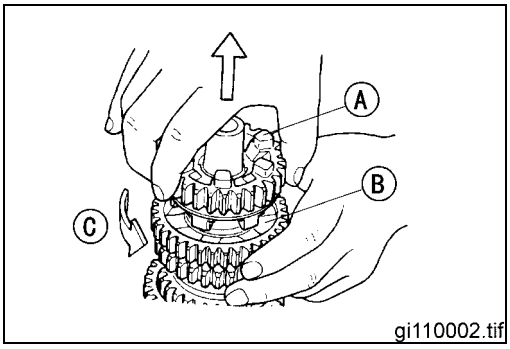

Transmission Assembly

- Align each gear oil hole with the drive shaft oil hole, when installing the 3rd gear [9] and the 5th gear [6] (see Drive Shaft Illustration).
- Align each oil hole [A] with the output shaft oil hole, when installing the 5th gear [B], 3rd gear and bushing [C], and the 4th gear.

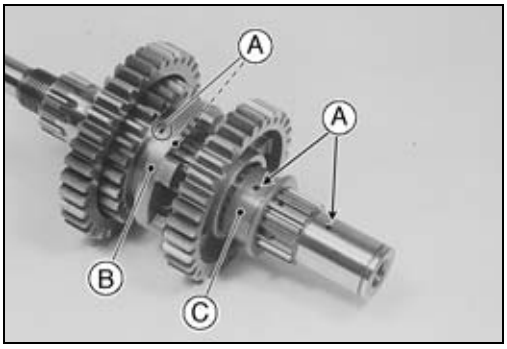

- Fit the three steel balls [A] into the holes [B] of the output 4th gear [C], and then install the gear on the output shaft so that the steel balls align with the recesses [D] in the shaft.

CAUTION

Do not apply grease to the steel balls to hold them in place. This will cause the positive neutral finder mechanism to malfunction.

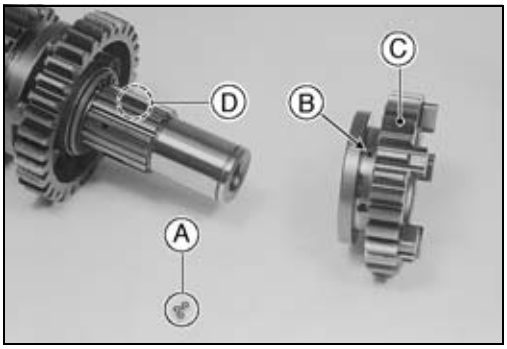

○After assembling the 4th gear with steel balls in place on the output shaft, check the ball-locking effect that the 4th gear does not come out of the output shaft when moving it up and down by hand.

Downloaded from www.vulcanriders-sweden.org

Transmission

- Replace any circlip [A] that were removed with new ones.
- Install the circlips so that the opening [B] is aligned with a spline groove [C].

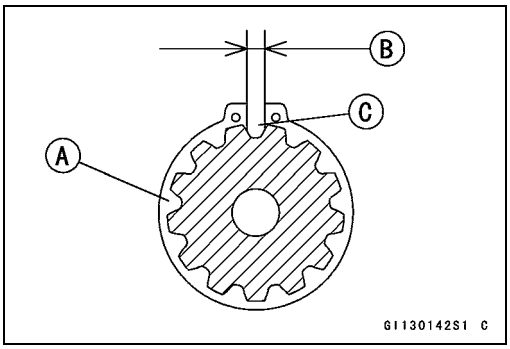

Drive Shaft: (VN1500-N1~ N2)

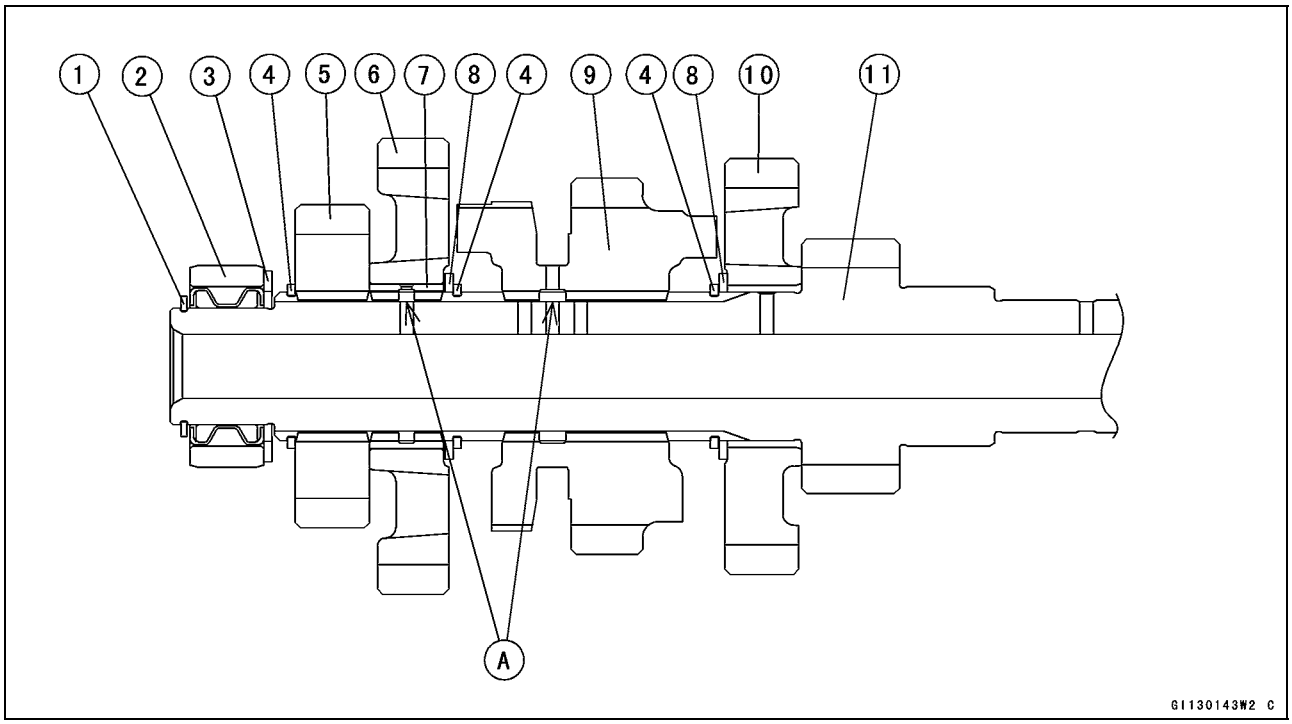

- Align gear oil holes with the shaft holes [A].

1. Circlip (ϕ 20 × 25.5 × t 1.2)
2. Needle Bearing
3. Thrust Washer (ϕ 22.3 × 35 × t 1.6)
4. Circlip (ϕ 28) (3)
5. 2nd Gear
6. 5th (Top) Gear
7. Bushing (5th Gear)
8. Washer (ϕ 28.5 × 34 × t 1.5) (2)
9. 3rd Gear
10. 4th Gear
11. 1st Gear

Downloaded from www.vulcanriders-sweden.org

Transmission

Drive Shaft: (VN1500-N3 ~)

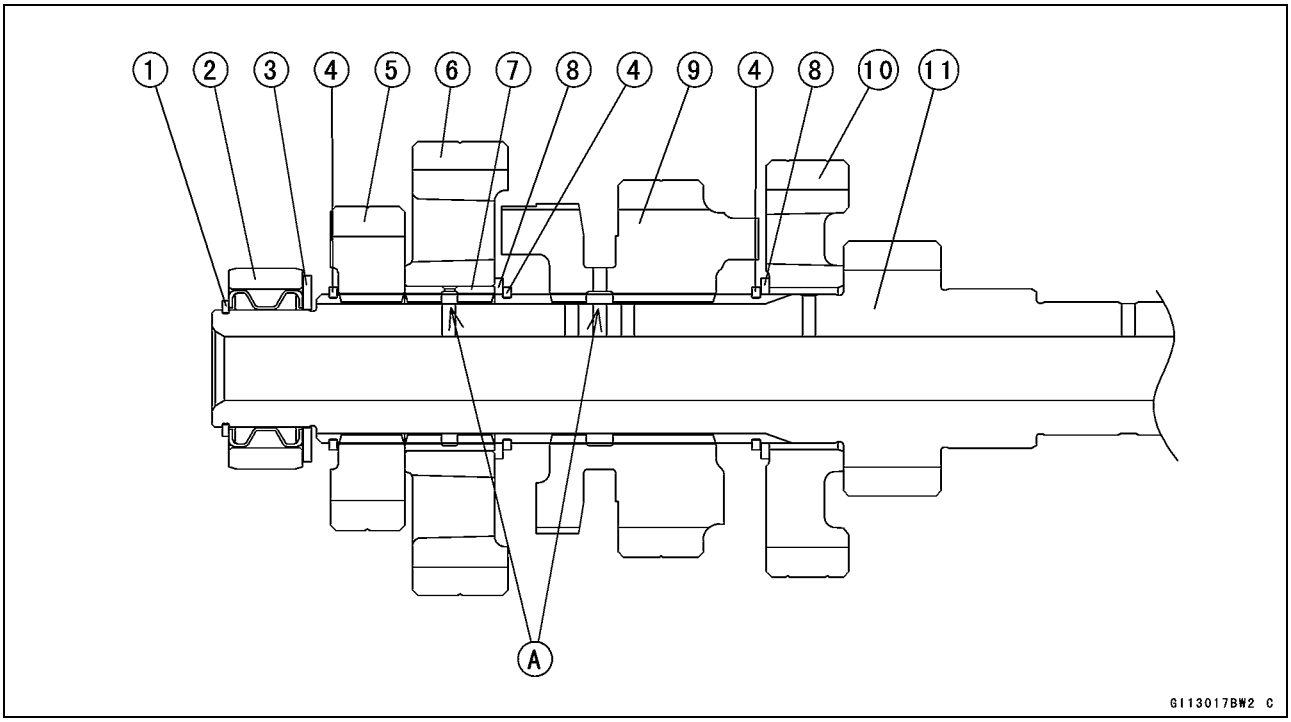

● Align gear oil holes with the shaft holes [A].

1. Circlip (ϕ 20 × 25.5 × t 1.2)
2. Needle Bearing
3. Thrust Washer (ϕ 22.3 × 35 × t 1.6)
4. Circlip (ϕ 28) (3)
5. 2nd Gear
6. 5th (Top) Gear
7. Bushing (5th Gear)
8. Washer (ϕ 28.5 × 34 × t 1.5) (2)
9. 3rd Gear
10. 4th Gear
11. 1st Gear

Downloaded from www.vulcanriders-sweden.org

Transmission

Output Shaft: (VN1500-N1~ N2)

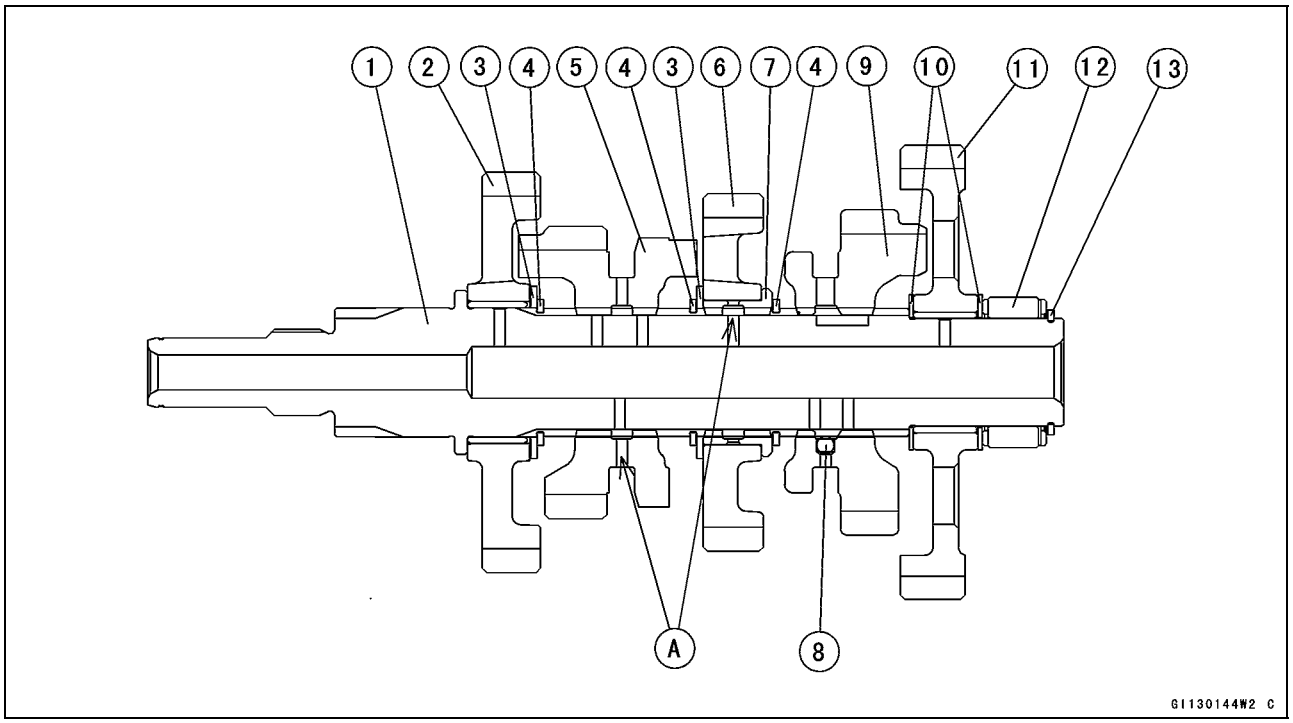

- Align gear oil holes with the shaft holes [A].

1. Output Shaft
2. 2nd Gear
3. Washer (ϕ 30.3 × 40 × t 1.5) (2)
4. Circlip (ϕ 29) (3)
5. 5th (Top) Gear
6. 3rd Gear
7. Bushing (3rd Gear)
8. Steel Balls
9. 4th Gear
10. Washer (ϕ 25.5 × 36 × t 1.0) (2)
11. 1st Gear
12. Needle Bearing
13. Circlip (ϕ 25)

Downloaded from www.vulcanriders-sweden.org

Transmission

Output Shaft: (VN1500-N3 ~)

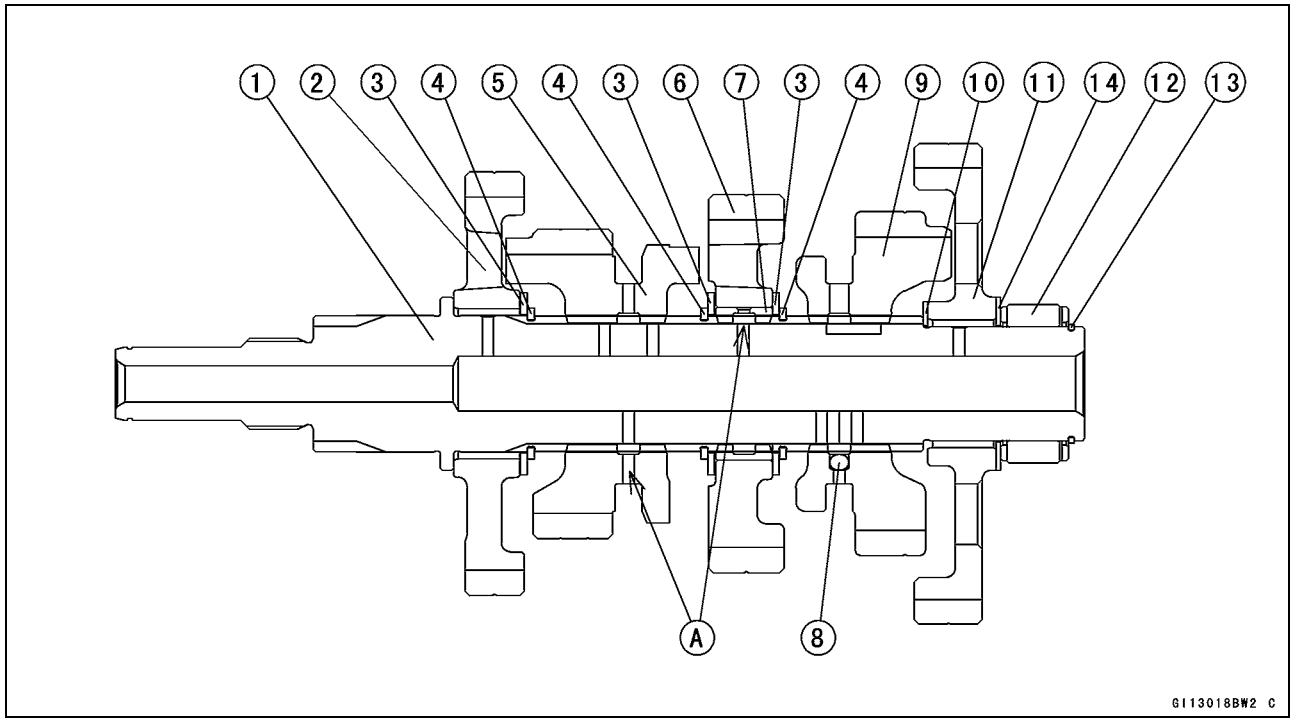

- Align gear oil holes with the shaft holes [A].

1. Output Shaft
2. 2nd Gear
3. Washer (ϕ 30.3 × 40 × t 1.5) (3)
4. Circlip (ϕ 29) (3)
5. 5th (Top) Gear
6. 3rd Gear
7. Bushing (3rd Gear)
8. Steel Balls
9. 4th Gear
10. Washer (ϕ 25.5 × 36 × t 1.0)
11. 1st Gear
12. Needle Bearing
13. Circlip (ϕ 25)
14. Washer (ϕ25.5 × 38 × t 1.0)

Shift Fork Bending Inspection

- Visually inspect the shift forks, and replace any fork that is bend. A bent fork could cause difficulty in shifting, or allow the transmission to jump out of gear under load.
  90° [A]

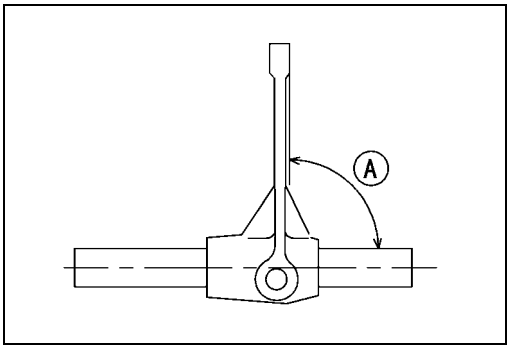

Shift Fork/Gear Groove Wear Inspection

- Measure the thickness of the shift fork ears [A], and measure the width [B] of the gear grooves.

★If the thickness of a shift fork ear is less than the service limit, the shift fork must be replaced.

Shift Fork Ear Thickness
Standard: 5.9 ~ 6.0 mm (0.2323 ~ 0.2362 in.)
Service Limit: 5.8 mm (0.2283 in.)

★If the gear groove is worn over the service limit, the gear must be replaced.

Gear Groove Width
Standard: 6.05 ~ 6.15 mm (0.2382 ~ 0.2421 in.)
Service Limit: 6.3 mm (0.2480 in.)

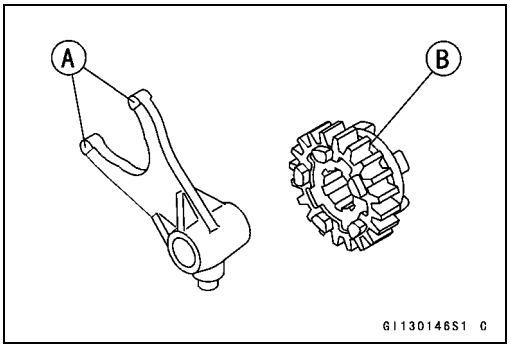

Downloaded from www.vulcanriders-sweden.org

Transmission

Shift Fork Guide Pin/Drum Groove Wear Inspection

- Measure the diameter of each shift fork guide pin [A], and measure the width [B] of each shift drum groove.

★If the guide pin on any shift fork is less than the service limit, the fork must be replaced.

Shift Fork Guide Pin Diameter
Standard: 7.9 ~ 8.0 mm (0.3110 ~ 0.3150 in.)
Service Limit: 7.8 mm (0.3071 in.)

★If any shift drum groove is worn over the service limit, the drum must be replaced.

Shift Drum Groove Width
Standard: 8.05 ~ 8.20 mm (0.3169 ~ 0.3228 in.)
Service Limit: 8.3 mm (0.3268 in.)

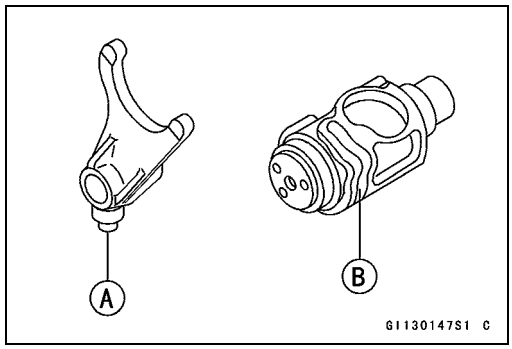

Gear Dog and Gear Dog Hole Damage Inspection

- Visually inspect the gear dogs [A] and gear dog holes [B].

★Replace any damaged gears or gears with excessively worn dogs or dog holes.

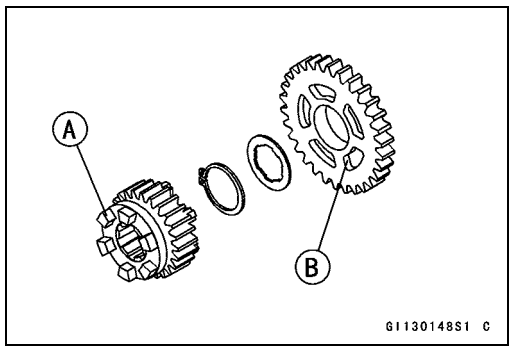

Downloaded from www.vulcanriders-sweden.org

Ball Bearing, Needle Bearing, and Oil Seal

Ball Bearing and Outer Race Replacement

CAUTION

Do not remove the ball bearing or needle bearing outer race unless it is necessary. Removal may damage them.

● Using a press or puller, remove the ball bearing and/or needle bearing outer race.

NOTE

○*In the absence of the above mentioned tools, satisfactory results may be obtained by heating the case to approximately 93°C (200°F) max., and tapping the bearing in or out.*

CAUTION

Do not heat the case with a blowtorch. This will warp the case. Soak the case in oil and heat the oil.

● Using a press and the bearing driver set [A], install the new bearing or outer race until it stops at the bottom of its housing.

Special Tool - Bearing Driver Set: 57001-1129

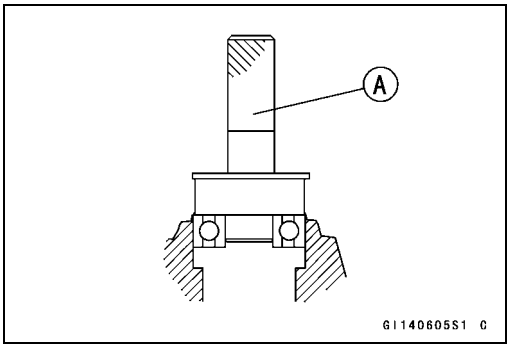

Ball and Needle Bearing Wear Inspection

CAUTION

Do not remove the ball bearings for inspection. Removal may damage them.

● Check the ball bearings.

○Since the ball bearings are made to extremely close tolerances, the wear must be judged by feel rather than measurement. Clean each bearing in a high-flash point solvent, dry it (do not spin the bearing while it is dry), and oil it with engine oil.

○Spin [A] the bearing by hand to check its condition.

★If the bearing is noisy, does not spin smoothly, or has any rough spots, replace it.

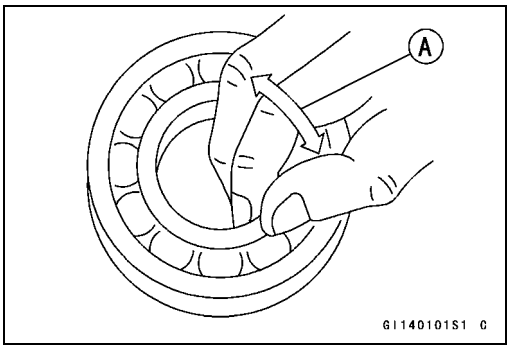

● Check the needle bearings.

○The rollers in a needle bearing normally wear very little, and wear is difficult to measure. Instead of measuring, inspect the bearing for abrasion, color change, or other damage.

★If there is any doubt as to the condition of a needle bearing, replace it.

Downloaded from www.vulcanriders-sweden.org

Ball Bearing, Needle Bearing, and Oil Seal

Oil Seal Inspection

● Inspect the oil seal.

★Replace it if the lips are misshapen, discolored (indicating that the rubber has deteriorated), hardened or otherwise damaged.

Downloaded from www.vulcanriders-sweden.org

Downloaded from www.vulcanriders-sweden.org

Wheels/Tires

Table of Contents

Exploded View 9-2
Specifications 9-3
Wheels (Rims) 9-4
Front Wheel Removal 9-4
Front Wheel Installation 9-5
Rear Wheel Removal 9-5
Rear Wheel Installation 9-6
Wheel Coupling Removal 9-7
Wheel Coupling Installation 9-7
Wheel Inspection 9-7
Spoke Tightness Inspection 9-8
Rim Inspection 9-8
Axle Inspection 9-9
Wheel Balance 9-9
Balance Inspection 9-9
Balance Adjustment 9-9
Tires 9-11
Air Pressure Inspection/Adjustment 9-11
Tire Wear Inspection 9-11
Tire Removal 9-12
Tire Installation 9-12
Hub Bearings (Wheel Bearings) 9-15
Removal 9-15
Installation 9-15
Inspection 9-16
Lubrication 9-16

Downloaded from www.vulcanriders-sweden.org

Exploded View

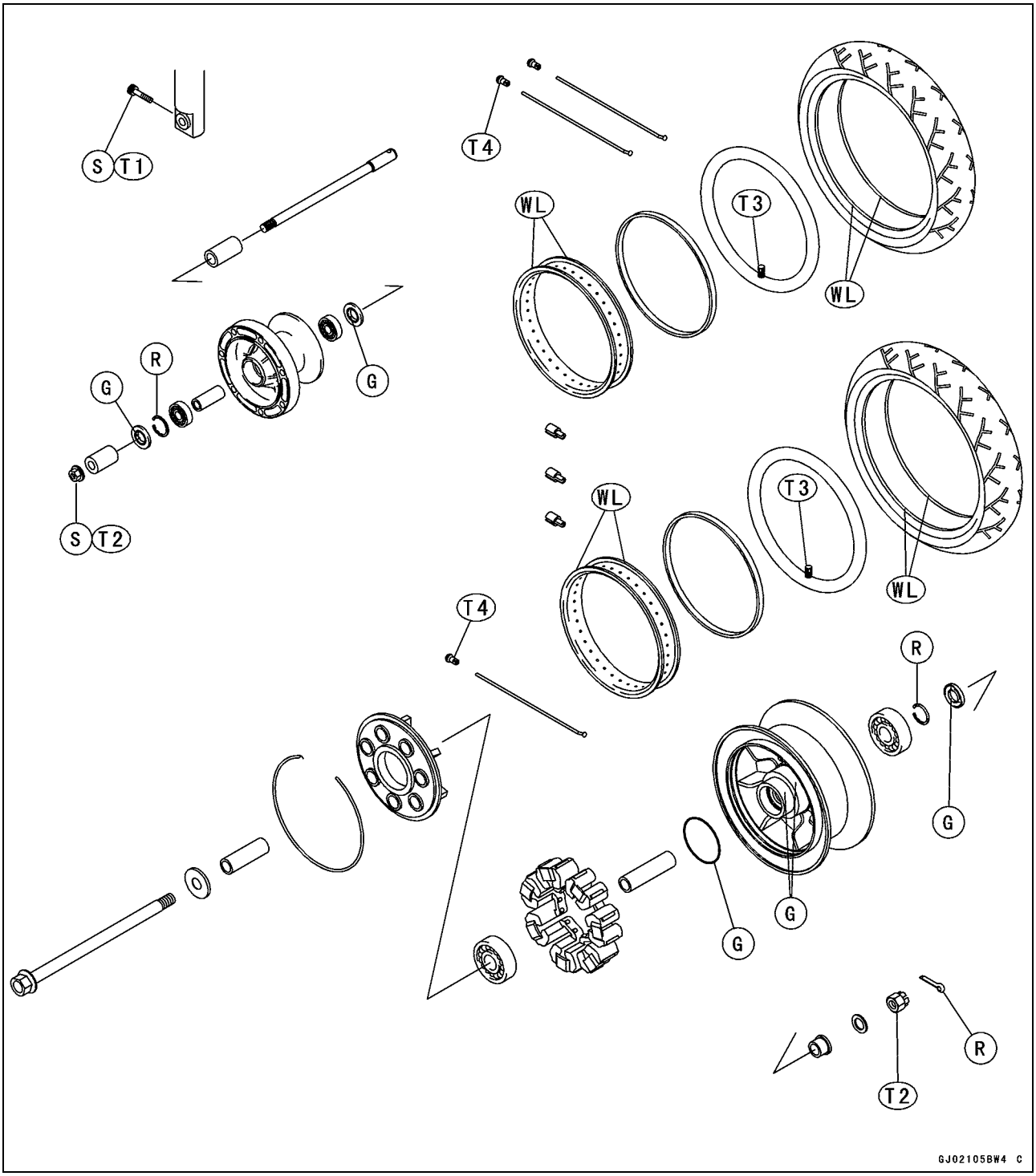

T1: 34 N·m (3.5 kgf·m, 25 ft·lb)
T2: 108 N·m (11.0 kgf·m, 80 ft·lb)
T3: 1.5 N·m (0.15 kgf·m, 13 in·lb)
T4: 2.9 ~ 7.4 N·m (0.30 ~ 0.75 kgf·m, 26 ~ 65 in·lb)
G: Apply grease.
R: Replacement Parts
S: Follow the specific tightening sequence.
WL: Apply a soap and water solution or rubber lubricant.

Downloaded from www.vulcanriders-sweden.org

Specifications

Item	Standard	Service Limit
Wheels (Rims)		
Rim Runout:		
Front/Rear		
Axial	TIR 0.8 mm (0.031 in.) or less (with tire installed)	TIR 2.0 mm (0.08 in.)
Radial	TIR 0.8 mm (0.031 in.) or less (with tire installed)	TIR 1.5 mm (0.06 in.)
Rim Size:		
Front	16 × 3.00	– – –
Rear	16 × 3.50	– – –
Axle Runout/100 mm (3.94 in.)	TIR 0.05 mm (0.002 in.) or less	TIR 0.2 mm (0.008 in.)
Wheel Balance	10 g (0.35 oz) or less	– – –
Balance Weights	10 g (0.35 oz), 20 g (0.70 oz), 30 g (1.05 oz)	– – –
Tires		
Type	Tube-type	– – –
Air Pressure (When cold):		
Front	Up to 183 kg (403 lb) load:200 kPa (2.00 kgf/cm², 28 psi)	– – –
Rear	Up to 97.5 kg (215 lb) load:250 kPa (2.50 kgf/cm², 36 psi)	– – –
	97.5 ~ 183 kg (215 ~ 403 lb) load280 kPa (2.80 kgf/cm², 40 psi)	– – –
Tread Depth:		
Front	BRIDGESTONE: 6.2 mm (0.244 in.) DUNLOP: 4.5 mm (0.177 in.)	1 mm (1.04 in.)
Rear	BRIDGESTONE: 7.2 mm (0.283 in.) DUNLOP: 7.3 mm (0.287 in.)	Up to 130 km/h (80 mph): 2 mm (0.08 in.) Over 130 km/h (80 mph): 3 mm (0.12 in.)
Standard Tires:	Make	Size
Front	BRIDGESTONE EXEDRA G703 L DUNLOP D404FU	130/90-16 M/C 67H
Rear	BRIDGESTONE EXEDRA G702 L (VN1500-N1 ~ N2) BRIDGESTONE EXEDRA G702 J (VN1500-N3 ~) DUNLOP D404L	150/80B16 M/C 71H

Special Tools - Inside Circlip Pliers: 57001-143
Bearing Driver Set: 57001-1129
Jack: 57001-1238
Bearing Remover Head, ϕ20 × ϕ22: 57001-1293
Bearing Remover Shaft, ϕ13: 57001-1377
Attachment Jack: 57001-1398

Downloaded from www.vulcanriders-sweden.org

Wheels (Rims)

Front Wheel Removal

- Remove the brake caliper [A] with the hoses installed (see Brakes chapter).
- Remove the front axle nut [B].
  Front [C]

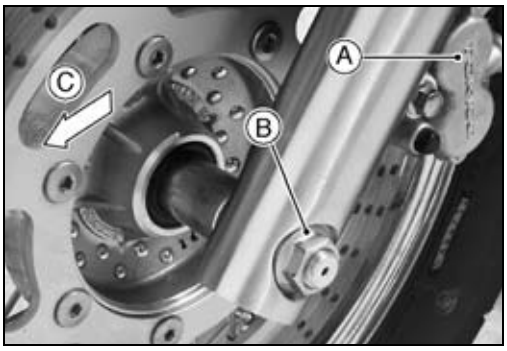

- Loosen:
  Front Axle Clamp Bolt [A]
  Front [B]

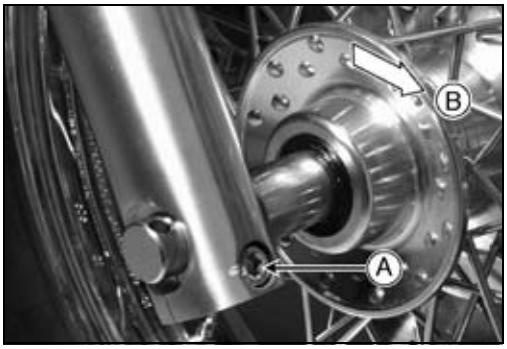

○Using the jack [A] and attachment jack [B] under the frame pipe ribs [C], and a commercially available jack [D] under the engine [E], lift the front wheel [F] **OFF** the ground until the rear wheel [G] touches the ground.

Special Tools - Jack: 57001-1238
Attachment Jack: 57001-1398

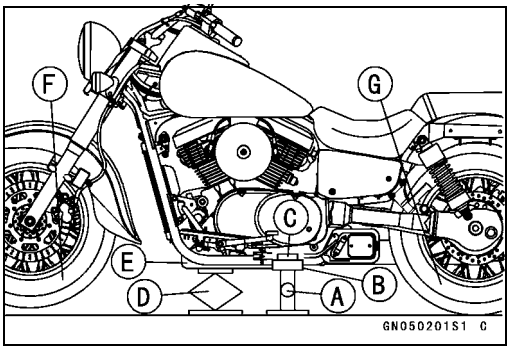

CAUTION

Be sure to put the rear wheel ON the ground when removing the front wheel, or the motorcycle may fall over. The motorcycle could be damaged.

⚠ WARNING

Be sure to put the rear wheel ON the ground when removing the front wheel, or the motorcycle may fall over. It could cause an accident and injry.

- Pull out the axle [A] to the right and drop the front wheel [B] out of the fork.

CAUTION

Do not lay the wheel directly on the ground with the disc facing down. This can damage or warp the disc. Place blocks under the wheel so that the disc does not touch the ground.



Downloaded from www.vulcanriders-sweden.org

Wheels (Rims)

Front Wheel Installation

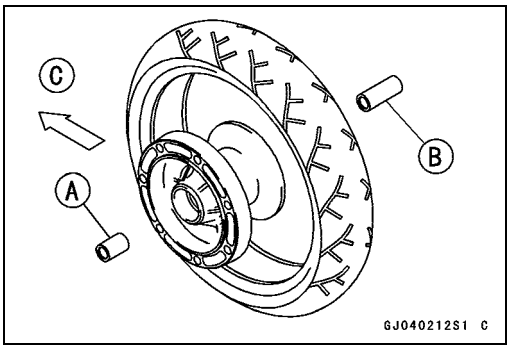

- Fit the shorter collar [A] on the left side and the longer collar [B] on the right side of the hub.
  Front [C]
- Insert the axle from the right side of the wheel.
- Tighten the axle, and then front axle clamp bolt.

Torque - Front Axle Nut: 108 N·m (11.0 kgf·m, 80 ft·lb)
Front Axle Clamp Bolt: 34 N·m (3.5 kgf·m, 25 ft·lb)
Front Caliper Mounting Bolts: 34 N·m (3.5 kgf·m, 25 ft·lb)

- Check the front brake effectiveness.

⚠ WARNING

Do not attempt to ride the motorcycle until a full brake lever is obtained by pumping the brake lever until the pads are against the disc. The brakes will not function on the first application of the lever if this is not done.

Rear Wheel Removal

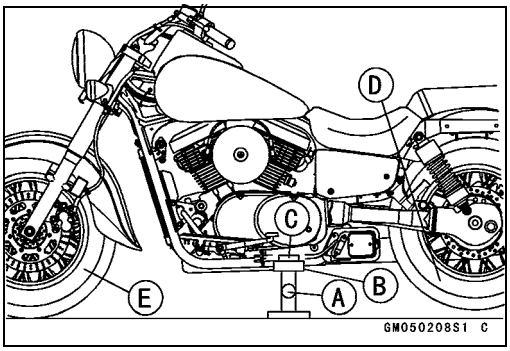

- Using the jack [A] and attachment jack [B] under the frame pipe ribs [C], lift the rear wheel [D] off the ground until the front wheel [E] touches the ground.

Special Tools - Jack: 57001-1238
Attachment Jack: 57001-1398

CAUTION

Be sure to put the front wheel ON the ground when removing the rear wheel, or the motorcycle may fall over. The motorcycle could be damaged.

⚠ WARNING

Be sure to put the front wheel ON the ground when removing the rear wheel, or the motorcycle may fall over. It could cause an accident and injury.

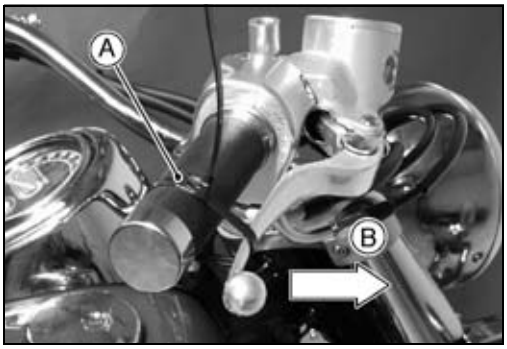

- Squeeze the brake lever slowly and hold it with a band [A].
  Front [B]

CAUTION

Be sure to hold the front brake when removing the rear wheel, or the motorcycle may fall over. The motorcycle could be damaged.

⚠ WARNING

Be sure to hold the front brake when removing the rear wheel, or the motorcycle may fall over. It could cause an accident and injry.

Downloaded from www.vulcanriders-sweden.org

Wheels (Rims)

- Remove:
  Muffler Bodies [A] (see Engine Top End chapter)
  Rear Fender [B] (see Frame chapter)

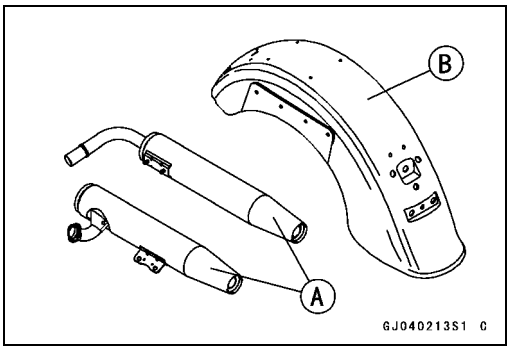

- Remove:
  Rear Caliper Mounting Bolts [A]
  Rear Caliper [B]
  Caliper Holder Bolt [C]
  Axle Nut Cotter Pin [D]
  Axle Nut [E]
  Front [F]

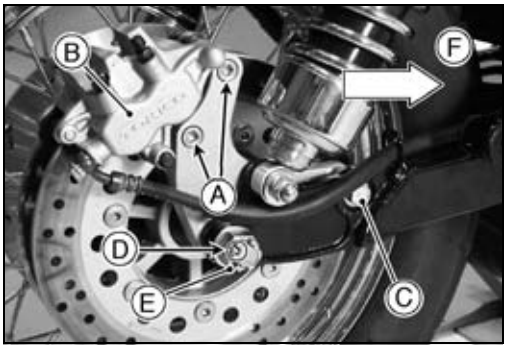

- Pull out the axle, and slide the rear wheel [A] toward the right [B] to disengage the wheel from the final gear case.
- Move the rear wheel back [C] and remove it.

CAUTION

Do not lay the wheel directly on the ground with the disc facing down. This can damage or warp the disc. Place blocks under the wheel so that the disc does not touch the ground.

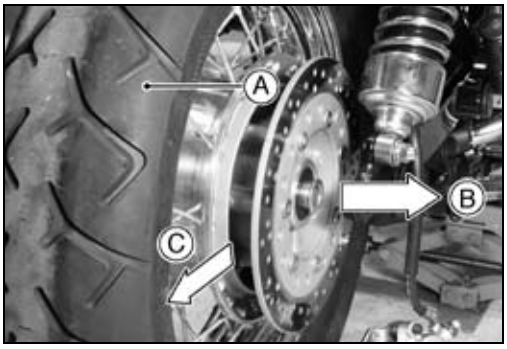

Rear Wheel Installation

- Apply grease to the grease seal of the wheel.
- Grease the ring gear hub splines [A] of the final gear case [B].
- Insert the collars [C] on both sides of the hub.
- Hold the rear wheel, and engage the ring gear hub splines with the wheel coupling hub splines.
- Insert the axle from the left side of the wheel.
- Tighten:

Torque - Rear Axle Nut: 108 N·m (11.0 kgf·m, 80 ft·lb)
Rear Caliper Holder Bolt: 64 N·m (6.5 kgf·m, 47 ft·lb)
Rear Caliper Mounting Bolts: 34 N·m (3.5 kgf·m, 25 ft·lb)

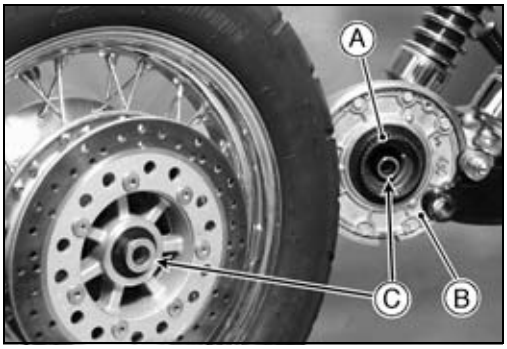

⚠ WARNING

If the axle nut is not securely tightened, an unsafe riding condition may result.

Downloaded from www.vulcanriders-sweden.org

Wheels (Rims)

● Insert a new cotter pin [A].

NOTE

○*When inserting the cotter pin, if the slots in the nut do not align with the cotter pin hole in the axel, tighten the nut clockwise [B] up to next alignment.*
○*It should be within 30 degree.*
○*Loosen once and tighten again when the slot goes past the nearest hole.*

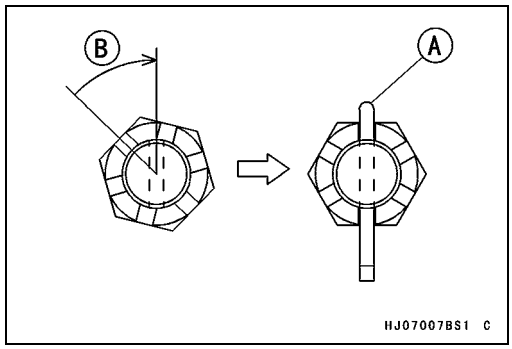

● Bend the cotter pin [A] over the nut [B].
● Check the rear brake.

⚠ WARNING

Do not attempt to drive the motorcycle until a full brake pedal is obtained by pumping the brake pedal until the pads are against the disc. The brake will not function on the first application of the pedal if this is not done.

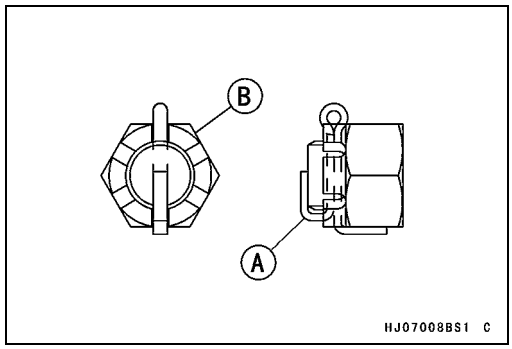

Wheel Coupling Removal

● Remove the rear wheel (see Rear Wheel Removal).
● Remove the coupling retaining ring [A].
● Remove the wheel coupling [B] with a bearing puller if necessary.



Wheel Coupling Installation

● Replace the O-ring [A] and the retaining ring [B].
● Grease the following:
  O-ring
  Bosses [C] of Rear Drum Hub
● Install:
  Rubber Damper [D]
  Coupling [E]
  Retaining Ring

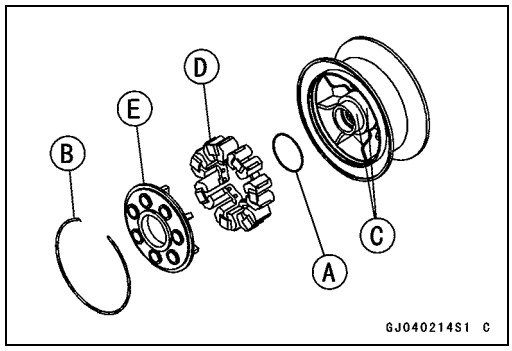

Wheel Inspection

● Raise the front or rear wheel off the ground.

Special Tools - Jack: 57001-1238
Attachment Jack: 57001-1398

● Spin [A] the wheel lightly, and check for roughness or binding.
★If roughness or binding is found, replace the hub bearings.
● Inspect the front and rear axles for damage (see Axle Inspection).
★If the axle is damaged or bent, replace it.

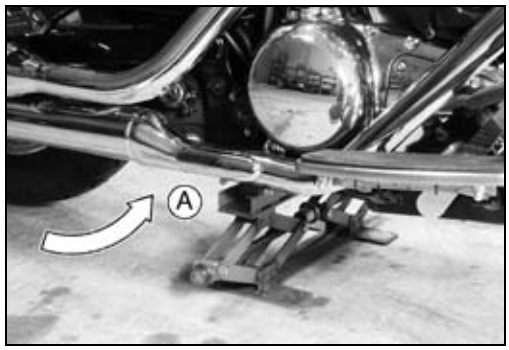

Downloaded from www.vulcanriders-sweden.org

Wheels (Rims)

Spoke Tightness Inspection

- Check that all the spokes are tightened evenly.

★If spoke tightness is uneven or loose, tighten the spoke nipples evenly.

Torque - Spoke Nipples: 2.9 ~ 7.4 N·m (0.30 ~ 0.75 kgf·m, 26 ~ 65 in·lb)

- Check the rim runout.

⚠ WARNING

If any spoke breaks, it should be replaced immediately. A missing spoke places an additional load on the other spokes, which will eventually cause other spokes to break.

Rim Inspection

- Raise the front or rear wheel is off the ground.

Special Tools - Jack: 57001-1238
Attachment Jack: 57001-1398

- Inspect the rim for small cracks, dents, bending, or warping.

★If there is any damage to the rim, it must be replaced.

- Set a dial gauge against the side of the rim, and rotate the rim to measure the axial runout [A]. The difference between the highest and lowest dial readings is the amount of runout.
- Set a dial gauge against the outer circumference of the rim, and rotate the rim to measure the radial runout [B]. The difference between the highest and lowest dial reading is the amount of runout.

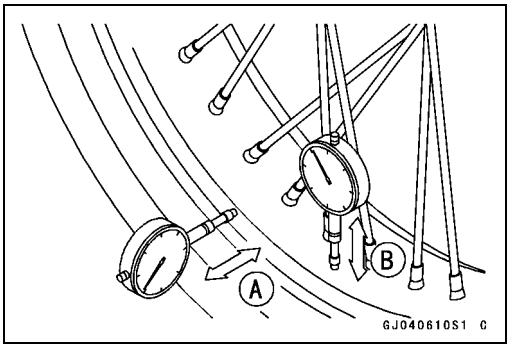

NOTE

○*The weld of the rim may show excessive runout. Disregard this weld when measuring runout.*

★If the rim runout exceeds the service limit, check the wheel bearings first. Replace them if they are damaged.

★If the problem is not due to the bearings, correct the rim warp (runout).

○A certain amount of rim warp can be corrected by recentering the rim. Loosen some spokes and tighten others within the standard torque to change the position of different parts of the rim. If the rim is badly bent, however, it must be replaced.

Rim Runout (with tire installed)
Standard:
Front/Rear:

Axial	**TIR 0.8 mm (0.031 in.) or less**
Radial	**TIR 0.8 mm (0.031 in.) or less**

Service Limit:

Axial	**TIR 2.0 mm (0.08 in.)**
Radial	**TIR 1.5 mm (0.06 in.)**

⚠ WARNING

Repairing and reusing the damaged wheel parts are dangerous. If wheel parts are damaged, replace them with new ones.

Downloaded from www.vulcanriders-sweden.org

Wheels (Rims)

Axle Inspection

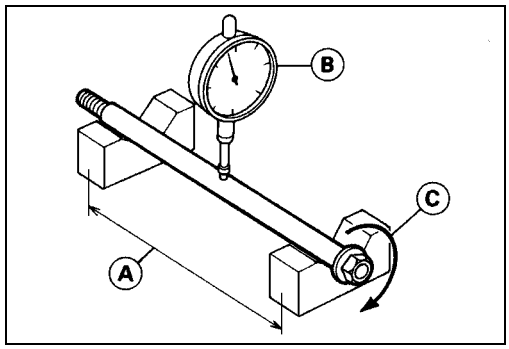

- Visually inspect the front and rear axles for damage.

★If the axle is damaged or bent, replace it.

- Place the axle on V blocks that are 100 mm [A] apart, and set a dial gauge [B] on the axle at a point halfway between the blocks. Turn [C] the axle to measure the runout. The difference between the highest and lowest dial readings is the amount of runout.

★If axle runout exceeds the service limit, replace the axle.

Axle Runout/100 mm
Standard: TIR 0.05 mm (0.002 in.) or less
Service Limit: TIR 0.2 mm (0.008 in.)

Wheel Balance

○To improve stability and decrease vibration at high speed, the front and rear wheels must be kept balanced.

- Check and balance the wheels when required, or when a tire is replaced with a new one.

Balance Inspection

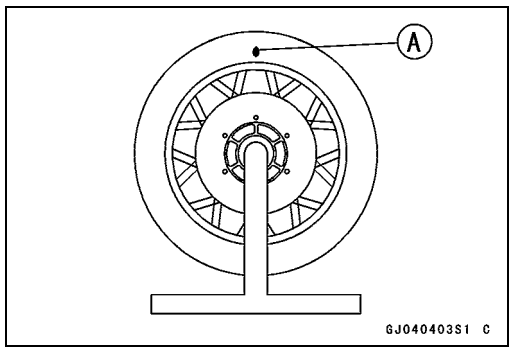

- Remove the wheel.
- Support the wheel so that it can be spun freely.
- Spin the wheel lightly, and mark [A] the wheel at the top when the wheel stops.

○Repeat this procedure several times. If the wheel stops of its own accord in various positions, it is well balanced.

★If the wheel always stops in one position, adjust the wheel balance.

Balance Adjustment

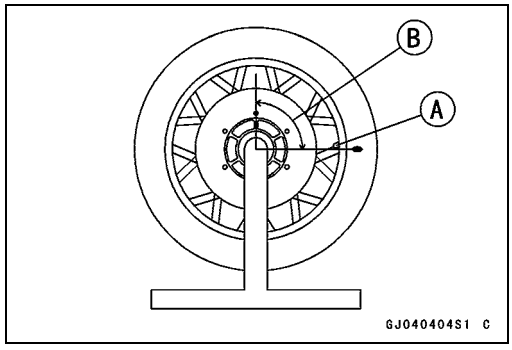

- If the wheel always stops in one position, provisionally attach a balance weight [A] on the spoke at the marking using adhesive tape.

⚠ WARNING

Use only the genuine balance weights.

- Rotate the wheel 1/4 turn [B], and see whether or not the wheel stops in this position. If it does, the correct balance weight is being used.

★If the wheel rotates and the weight goes up, replace the weight with the next heavier size. If the wheel rotates and the weight goes down, replace the weight with the next lighter size. Repeat these steps until the wheel remains at rest after being rotated 1/4 turn.

- Rotate the wheel another 1/4 turn and then another 1/4 turn to see if the wheel is correctly balanced.
- Repeat the entire procedure as many times as necessary to achieve correct wheel balance.

Downloaded from www.vulcanriders-sweden.org

Wheels (Rims)

★If proper balance has been achieved, permanently install the balance weight.

○Clamp on the balance weight [A] firmly using pliers.

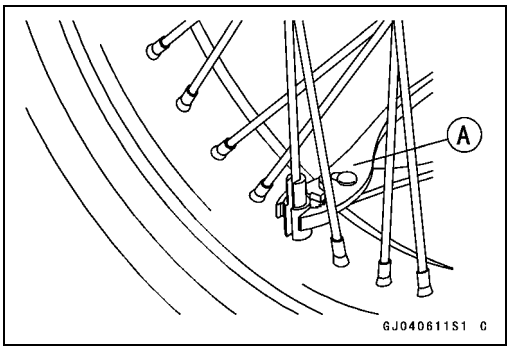

Balance Weight

Part Number	Weight (grams)
41075-1007/41075-0011	10 (0.35 oz)
41075-1008/41075-0012	20 (0.70 oz)
41075-1009/41075-0013	30 (1.05 oz)

NOTE

○*Balance weights are available from Kawasaki Dealers in 10, 20, and 30 gram (0.35, 0.70 and 1.05 ounce) sizes. An imbalance of less than 10 grams (0.35 ounce) will not usually affect running stability.*

○*Do not use four or more balance weights (more than 90 gram (1.32 ounce)). If the wheel requires an excess balance weight, remove and disassemble the wheel to find the cause.*

Downloaded from www.vulcanriders-sweden.org

Tires

Air Pressure Inspection/Adjustment



- Measure the tire air pressure with an air pressure gauge [A] (Owner's Tool: 52005-1142) when the tires are cold: when the motorcycle has not been ridden more than a mile during the past 3 hours.

★Adjust the tire air pressure if necessary.

- Install the air valve cap.

Air Pressure (when cold)

	Load	Air Pressure
Front	Up to 183 kg (403 lb)	200 kPa (2.00 kgf/cm², 28 psi)
Rear	Up to 97.5 kg (215 lb) 97.5 ~ 183 kg (215 ~ 403 lb)	250 kPa (2.50 kgf/cm², 36 psi) 280 kPa (2.80 kgf/cm², 40 psi)

Tire Wear Inspection

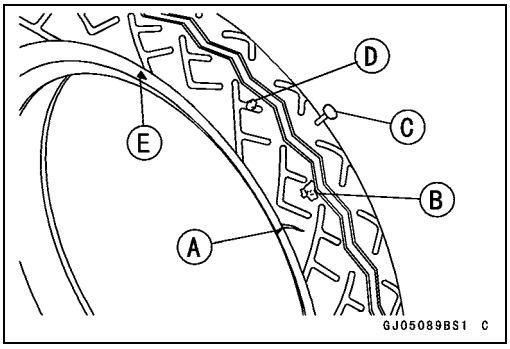

○As the tire tread wears down, the tire becomes more susceptible to puncture and failure. An accepted estimate is that 90% of all tire failures occur during the last 10% of tread life (90% worn). So it is false economy and unsafe to use the tires until they are bald.

- Visually inspect the tire for cracks [A] and cuts [B], replacing the tire in case of damage. Swelling or high spots indicate internal damage, requiring tire replacement.
- Check for any nails [C], metal pieces, stones [D], or other foreign particles that may be embedded or stuck in the tires.

★Repair or replace the tire with a new one if necessary.

Wear Indicator Mark Position [E]

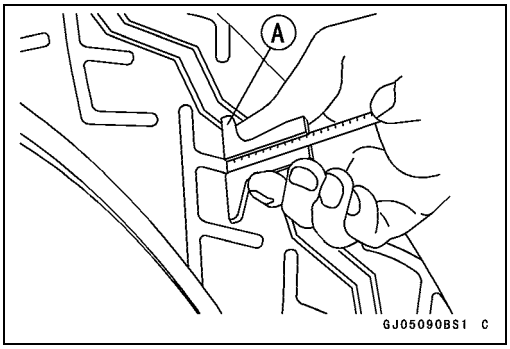

- Measure the tread depth in the middle of the tread with a depth gauge [A]. Since the tire may wear unevenly, take measurement at several places.

★If any measurement is less than the service limit, replace the tire.

Thread Depth

BRIDGESTONE	Standard	Service Limit
Front	6.2 mm (0.244 in.)	1 mm (0.04 in.)
Rear	7.2 mm (0.283 in.)	2 mm (0.08 in.) (Up to 130 km/h) 3 mm (0.12 in.) (Over 130 km/h)

DUNLOP	Standard	Service Limit
Front	4.5 mm (0.177 in.)	1 mm (0.04 in.)
Rear	7.3 mm (0.287 in.)	2 mm (0.08 in.) (Up to 130 km/h) 3 mm (0.12 in.) (Over 130 km/h)

NOTE

○*Most countries may have their own regulations requiring a minimum tire tread depth: be sure to follow them.*

Downloaded from www.vulcanriders-sweden.org

Tires

Tire Removal

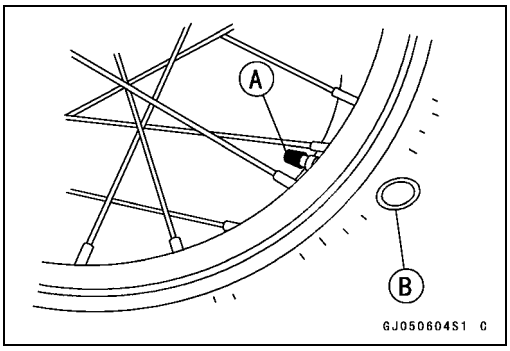

- Remove the following.
  Wheel (see Front and Rear Wheel Removal)
  Brake Disc
  Valve Cap and Valve Core (let out the air)
  Valve Stem Nut
- To maintain wheel balance, mark the air valve position on the tire with chalk so that the tire can be reinstalled in the same position.
  Air Valve [A]
  Chalk Mark or Yellow Mark [B]
- Lubricate the tire beads and rim flanges on both sides with a soap and water solution or rubber lubricant. This helps the tire beads slip off the rim flanges.

CAUTION

Never lubricate with engine oil or petroleum distillates because they will deteriorate the tire.

- Remove the tire from the rim using a commercially available tire changer.

NOTE

○*The tires cannot be removed with the bead breaker because they fit the rims too tightly.*

Tire Installation

⚠ WARNING

To ensure safe handling and stability, use only the standard tires for replacement, inflated to the standard pressure. Use the same manufacturer's tires on both front and rear wheels.

NOTE

○*Replace the rim band with a new one whenever the tire is replaced.*

- Inspect the rim and tire, and replace them if necessary.
- Clean the sealing surfaces of the rim and tire, and smooth the sealing surfaces of the rim with a fine emery cloth if necessary.

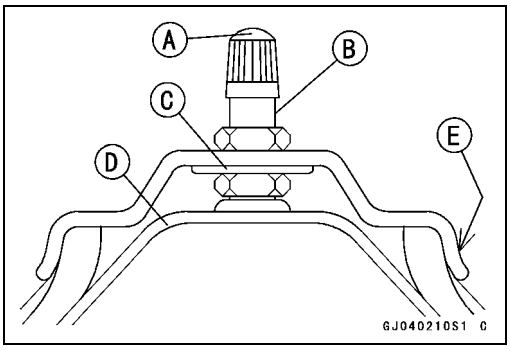

- Insert the valve of the front tube in the front rim.
  Valve Cap [A]
  Valve Stem [B]
  Rim Band [C]
  Front Tube [D]
  Front Rim [E]

Downloaded from www.vulcanriders-sweden.org

Tires

● Insert the valve of the rear tube in the rear rim.

Torque - Tire Air Valve Stem Nuts: 1.5 N·m (0.15 kgf·m, 13 in·lb)

Valve Cap [A]
Valve Stem [B]
Rim Band [C]
Rear Tube [D]
Rear Rim [E]

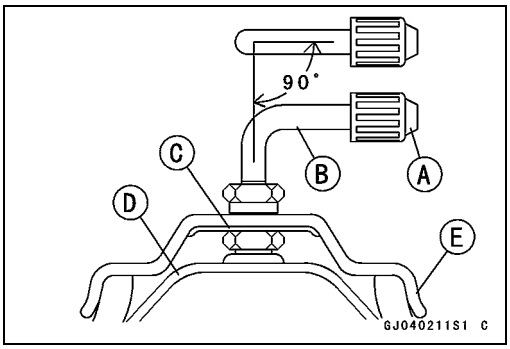

● Apply a soap and water solution, or rubber lubricant to the rim flange and tire beads.

CAUTION

Never lubricate with mineral oil (engine oil) or gasoline because they will cause deterioration of the tire.

● Check the tire rotation mark on the front and rear tires and install them on the rim accordingly.
Tire Rotation Mark [A]
Rotation Direction [B]

○Install the front tire [C] on the rim so that the larger flange [D] of the drum hub faces left.

○Install the rear tire [E] on the rim so that the damper [F] faces left.
Front [G]

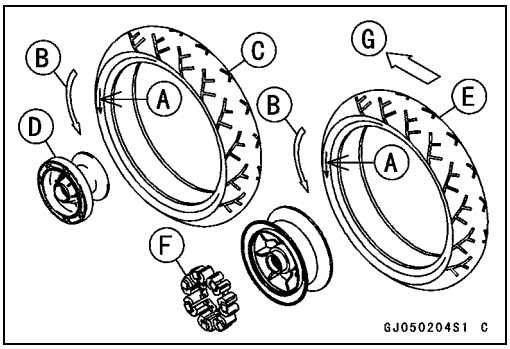

● Position the tire on the rim so that the air valve [A] is at the tire balance mark [B] (the chalk mark made during removal, or the yellow paint mark on a new tire).
● Install the tire bead over the rim flange using a commercially available tire changer.
● Lubricate the tire beads and rim flanges with a soap and water solution or rubber lubricant to help seat the tire beads in the sealing surfaces of the rim while inflating the tire.
● Center the rim in the tire beads, and inflate the tire with compressed air until the tire beads seat in the sealing surfaces.

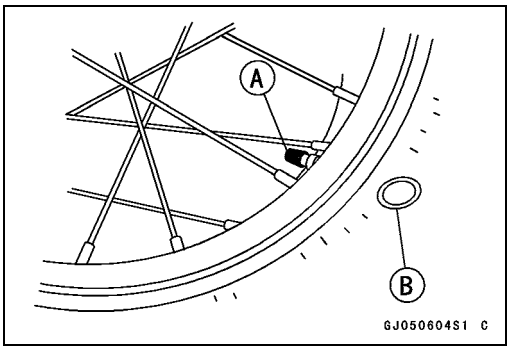

⚠ WARNING

Be sure to install the valve core whenever inflating the tire, and do not inflate the tire to more than 400 kPa (4.0 kgf/cm², 57 psi). Overinflation can explode the tire with possibility of injury and loss of life.

Downloaded from www.vulcanriders-sweden.org

Tires

- Check to see that the bead lines [A] on both sides of the tire sidewalls are parallel with the rim flanges [B].

★If the rim flanges and tire sidewall bead lines are not parallel, remove the valve core.

- Lubricate the rim flanges and tire beads.
- Install the valve core and inflate the tire again.
- After the tire beads seat in the rim flanges, check for air leakage.

○Inflate the tire slightly above standard inflation.

○Use a soap and water solution or submerge the tire, and check for bubbles that would indicate leakage.

- Adjust the air pressure to the specified pressure (see Tire Inspection).

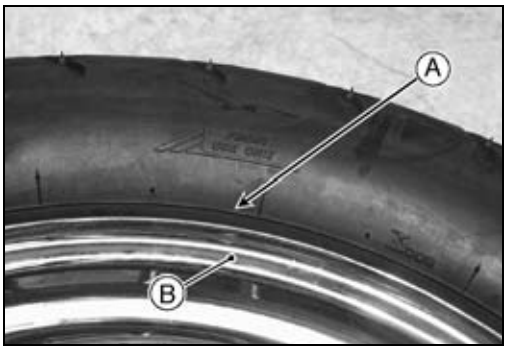

- Install the air valve cap.
- Install the brake disc [A] so that the marked side [B] faces out.
- Apply a non-permanent locking agent, and tighten the brake disc bolts [C].

Torque - Brake Disc Bolts: 27 N·m (2.8 kgf·m, 20 ft·lb)

- Adjust the wheel balance.

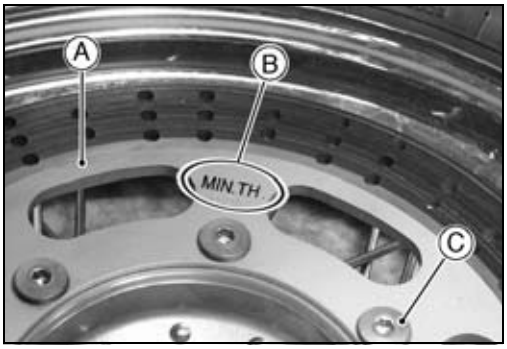

⚠ WARNING

Check and balance the wheel whenever a tire is replaced with a new one.

Downloaded from www.vulcanriders-sweden.org

Hub Bearings (Wheel Bearings)

Removal

- Remove the wheel, and take out the following.
  Collars
  Grease Seals [A]
  Circlips [B]
  Coupling [C] (out of rear hub)
  Front Hub [D]
  Rear Hub [E]

Special Tool - Inside Circlip Pliers: 57001-143

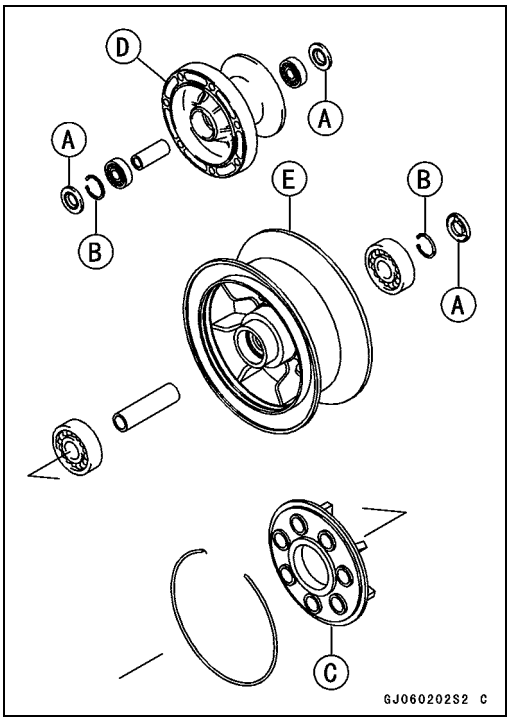

- Use the bearing remover (special tools) to remove the hub bearings [A].

CAUTION

Do not lay the wheel directly on the ground with the disc facing down. This can damage or warp the disc. Place blocks under the wheel so that the disc does not touch the ground.

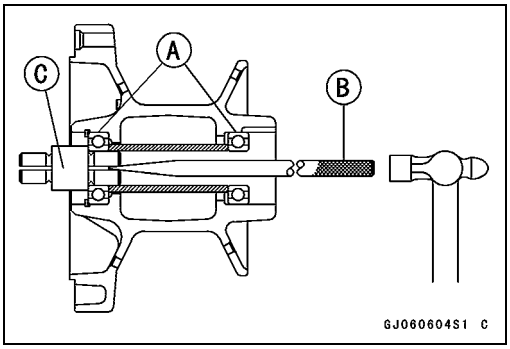

Special Tools - Bearing Remover Shaft, ϕ13: 57001-1377 [B]
Bearing Remover Head, ϕ20 × ϕ22: 57001 -1293 [C]

Installation

- Before installing the wheel bearings, blow any dirt or foreign particles out of the hub with compressed air to prevent contamination of the bearings.
- Replace the bearings with new ones.

NOTE

○*Install the bearings so that the marked side faces out.*

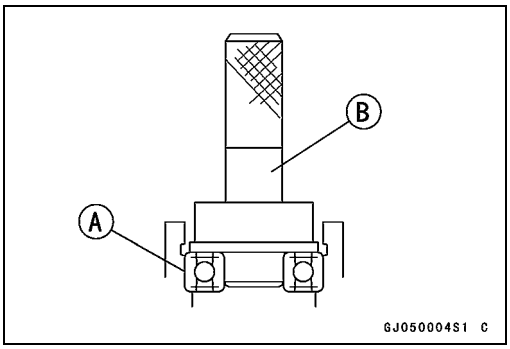

- Install the bearings by using a bearing driver which does not contact the bearing inner race.
- First, press each bearing in until it bottoms out.
  Left Bearing (front hub) [A]
  Right Bearing (rear hub) [A]

Special Tool - Bearing Driver Set: 57001-1129 [B]

- Replace the circlips with new ones.
- Install the following:
  New Circlip
  Distance Collar
  Right Bearing (front hub)
  Left Bearing (rear hub)

Special Tool - Inside Circlip Pliers: 57001-143

Downloaded from www.vulcanriders-sweden.org

Hub Bearings (Wheel Bearings)

- Replace the grease seals with new ones.
- Press in the grease seals [A] so that the seal surface is flush [B] with the end of the hole.

○Apply high temperature grease to the grease seal lips.

Special Tool - Bearing Driver Set: 57001-1129 [C]

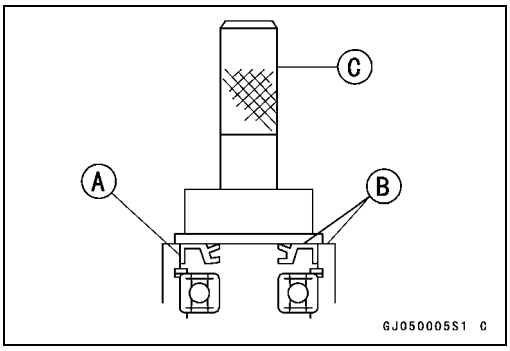

Inspection

○Since the hub bearings are made to extremely close tolerance, the clearance cannot normally be measured.

NOTE

○*Do not remove any bearings for inspection. If any bearings are removed, they will need to be replaced with new ones.*

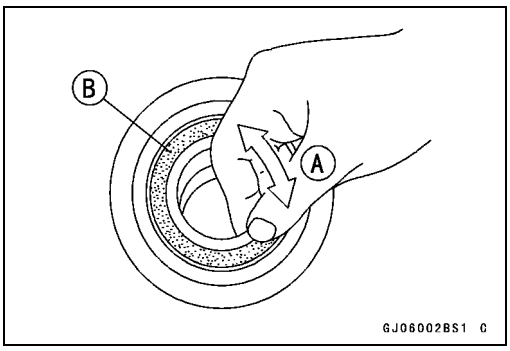

- Turn each bearing in the hub back and forth [A] while checking for plays, roughness, or binding.

★If bearing play, roughness, or binding is found, replace the bearing.

- Examine the bearing seal [B] for tears or leakage.

★If the seal is torn or is leaking, replace the bearing.

Lubrication

NOTE

○*Since the hub bearings are packed with grease and sealed, lubrication is not required.*

Downloaded from www.vulcanriders-sweden.org

Final Drive

Table of Contents

Exploded View 10-2
Specifications 10-6
Final Gear Case Oil 10-7
  Oil Level Inspection 10-7
  Oil Change 10-7
Final Gear Case 10-8
  Removal 10-8
  Installation 10-8
  Disassembly 10-8
  Pinion Gear Removal (VN1500-N4 ~) 10-12
  Pinion Gear Installation (VN1500-N4 ~) 10-13
  Pinion Gear Bearing Preload Adjustment (VN1500-N4 ~) 10-15
  Assembly 10-17
  Bevel Gear Inspection 10-18
  Pinion Gear Joint Inspection 10-18
  Final Bevel Gear Adjustment 10-19
  Backlash Adjustment 10-20
  Tooth Contact Adjustment 10-21
  Bevel Gear Inspection 10-22
Propeller Shaft 10-24
  Removal 10-24
  Installation 10-24
  Propeller Shaft Joint Lubrication 10-25
  Propeller Shaft Inspection 10-25
  Sliding Joint Inspection 10-25
Front Bevel Gears 10-26
  Front Gear Case Removal 10-26
  Front Gear Case Installation 10-26
  Front Gear Case Disassembly 10-26
  Front Gear Case Assembly 10-27
  Driven Gear Disassembly 10-29
  Driven Gear Assembly 10-29
  Damper Cam Removal 10-30
  Damper Cam Installation 10-30
  Front Bevel Gear Adjustment 10-30
  Preload Adjustment 10-32
  Preload Measurement with Spring Scale 10-32
  Backlash Adjustment 10-34
  Tooth Contact Adjustment 10-35
  Bevel Gear Inspection 10-36
  Cam Damper Inspection 10-37
Bearing and Oil Seal 10-38
  Ball or Needle Bearing Replacement 10-38
  Ball Bearing Wear 10-39
  Tapered Roller Bearing Inspection 10-39
  Needle Bearing Inspection 10-39
  Oil Seal Inspection 10-39

Downloaded from www.vulcanriders-sweden.org

Exploded View

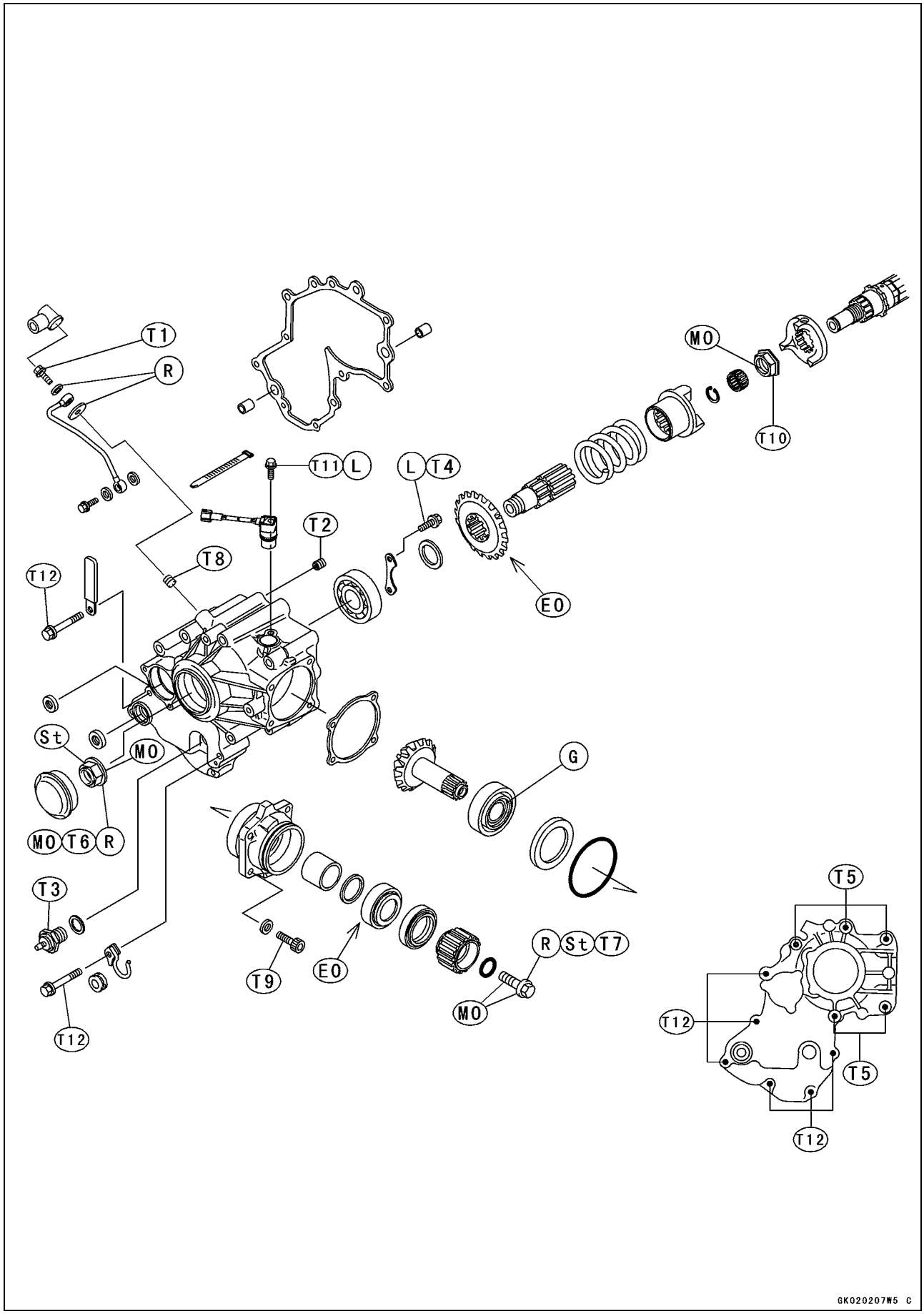

Downloaded from www.vulcanriders-sweden.org

Exploded View

Front Gear Case

T1: 12 N·m (1.2 kgf·m, 104 in·lb)
T2: 18 N·m (1.8 kgf·m, 13 ft·lb)
T3: 15 N·m (1.5 kgf·m, 11 ft·lb)
T4: 8.8 N·m (0.90 kgf·m, 78 in·lb)
T5: 29 N·m (3.0 kgf·m, 22 ft·lb)
T6: 265 N·m (27.0 kgf·m, 195 ft·lb)
T7: 118 N·m (12.0 kgf·m, 87 ft·lb)
T8: 2.9 N·m (0.30 kgf·m, 26 in·lb)
T9: 25 N·m (2.5 kgf·m, 18 ft·lb)
T10: 196 N·m (20.0 kgf·m, 145 ft·lb)
T11: 9.8 N·m (1.0 kgf·m, 87 in·lb)
T12: 8.8 N·m (0.90 kgf·m, 78 in·lb), No mark (early model)
12 N·m (1.2 kgf·m, 104 in·lb), Mark 9 (late model)
EO: Apply engine oil.
G: Apply grease.
L: Apply a non-permanent locking agent.
MO: Apply molybdenum disulfide oil.
The molybdenum disulfide oil is a mixture of engine oil and molybdenum disulfide grease with a weight ratio (10 : 1)
R: Replacement Parts
St: Stake the fasteners.

Downloaded from www.vulcanriders-sweden.org

Exploded View

VN1500-N1 ~ N3

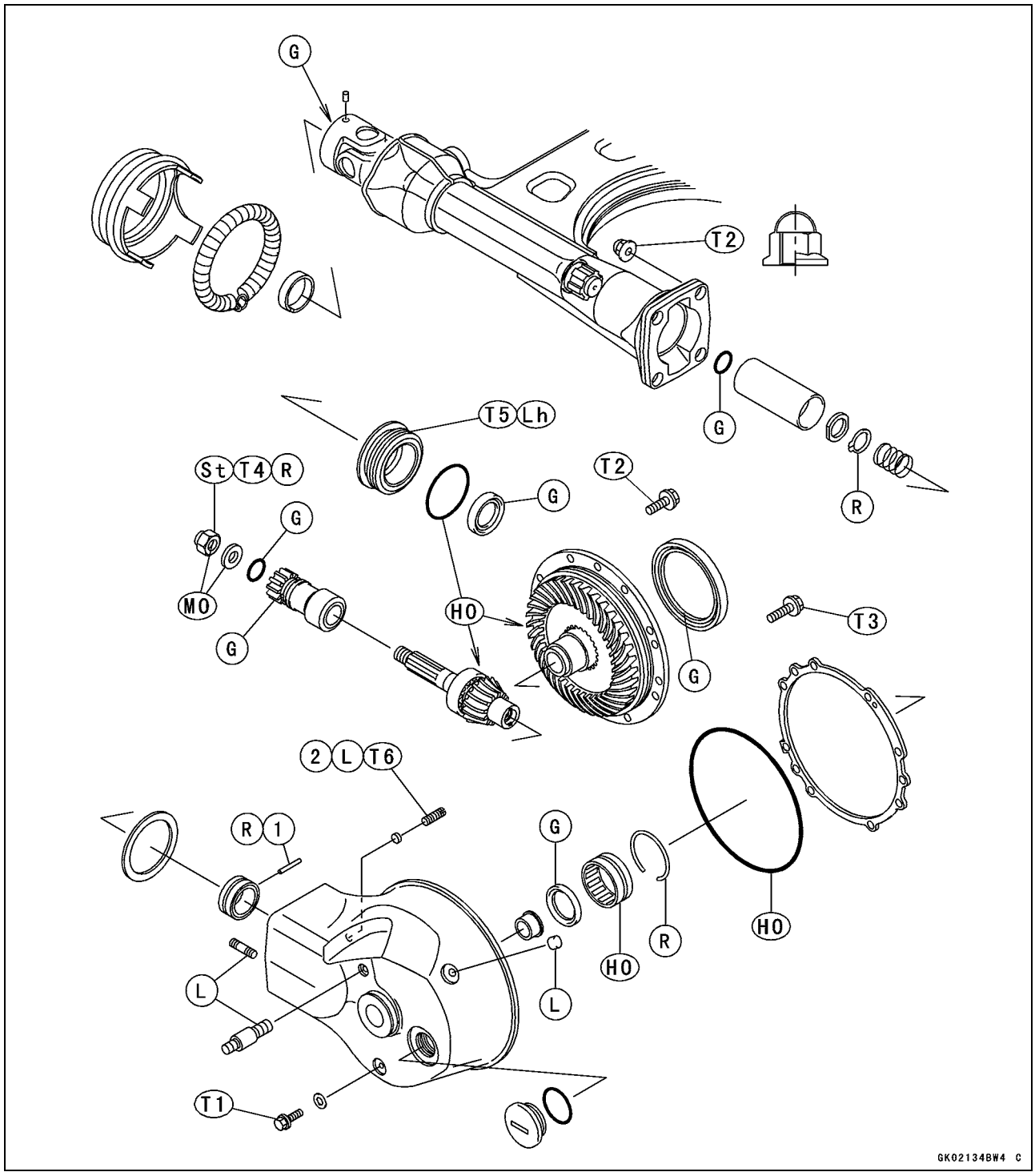

Final Gear Case

1. Spring Pin
2. Retainer Stop Screw

T1: 8.8 N·m (0.90 kgf·m, 78 in·lb)
T2: 34 N·m (3.5 kgf·m, 25 ft·lb), ϕ10
T3: 23 N·m (2.3 kgf·m, 17 ft·lb), ϕ8
T4: 127 N·m (13 kgf·m, 94 ft·lb)
T5: 245 N·m (25.0 kgf·m, 181 ft·lb)
T6: 16 N·m (1.6 kgf·m, 12 ft·lb)
G: Apply grease.
HO: Apply hypoid gear oil.
L: Apply a non-permanent locking agent.
Lh: Left-hand Threads
MO: Apply molybdenum disulfide oil.
The molybdenum disulfide oil is a mixture of engine oil and molybdenum disulfide grease with a weight ratio (10 : 1)
O: Apply oil.
R: Replacement Parts
St: Stake the fasteners.

Downloaded from www.vulcanriders-sweden.org

Exploded View

VN1500-N4 ~

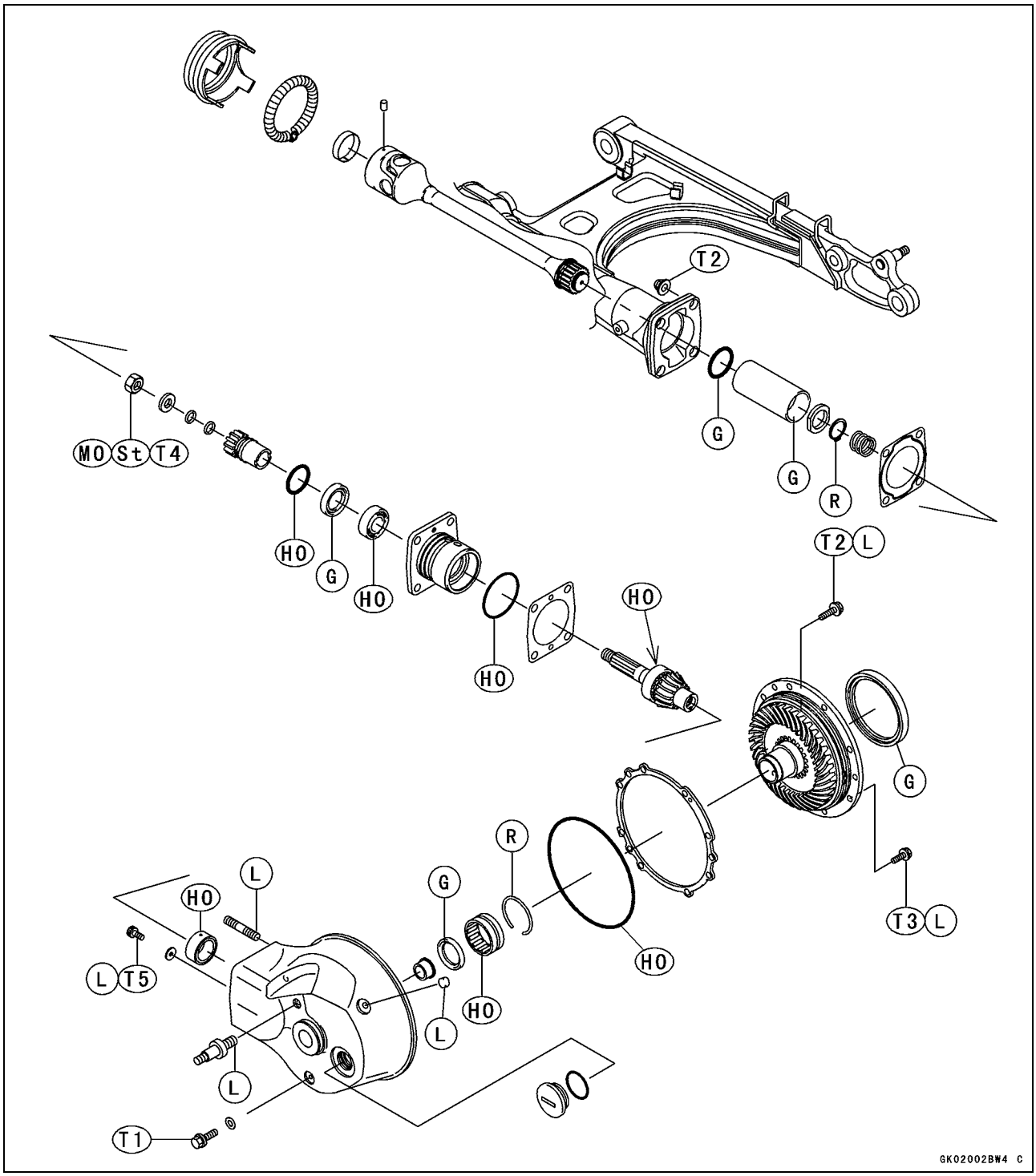

Final Gear Case

T1: 8.8 N·m (0.90 kgf·m, 78 in·lb)
T2: 34 N·m (3.5 kgf·m, 25 ft·lb), ϕ10
T3: 23 N·m (2.3 kgf·m, 17 ft·lb), ϕ8
T4: 127 N·m (13 kgf·m, 94 ft·lb)
T5: 6.9 N·m (0.7 kgf·m, 61 ft·lb)
G: Apply grease.
HO: Apply hypoid gear oil.
L: Apply a non-permanent locking agent.
Lh: Left-hand Threads
MO: Apply molybdenum disulfide oil.
The molybdenum disulfide oil is a mixture of engine oil and molybdenum disulfide grease with a weight ratio (10 : 1)
R: Replacement Parts
St: Stake the fasteners.

Downloaded from www.vulcanriders-sweden.org

Specifications

Item	Standard
Final Gear Case Oil	
Grade	API: GL-5 hypoid gear oil
Viscosity	When above 5°C (41°F): SAE90 When below 5°C (41°F): SAE80
Oil Level	Filler opening bottom
Amount	200 mL (6.8 US oz)
Final Bevel Gear Backlash	0.06 ~ 0.09 mm (0.0204 ~ 0.0035 in.) (at gear hub spline)
Propeller Shaft Joint Grease	20 mL (0.68 US oz), high-temperature grease
Front Bevel Gear Backlash	0.10 ~ 0.20 mm (0.0039 ~ 0.0079 in.) (at gear tooth)
Preload for Front Bevel Gear Bearing	
Torque Wrench	0.5 ~ 0.9 N·m (0.05 ~ 0.09 kgf·m, 4.3 ~ 7.8 in·lb)
Spring Scale	3 ~ 4 N (0.3 ~ 0. 5 kgf, 0.6 ~ 1.0 lb)

Special Tools - Bearing Puller: 57001-158
Bearing Puller Adapter: 57001-317
Bearing Driver, ϕ32: 57001-382
Damper Cam Holder: 57001-1025
Driven Gear Holder, m2: 57001-1027
Oil Seal & Bearing Remover: 57001-1058
Bearing Driver Set: 57001-1129
Pinion Gear Holder, m1.9: 57001-1165
Jack: 57001-1238
Final Gear Holder: 57001-1250
Bearing Retainer Wrench: 57001-1251
Attachment Jack: 57001-1398
Drive Shaft Holder: 57001-1407
Filler Cap Driver: 57001-1454

Downloaded from www.vulcanriders-sweden.org

Final Gear Case Oil

Oil Level Inspection

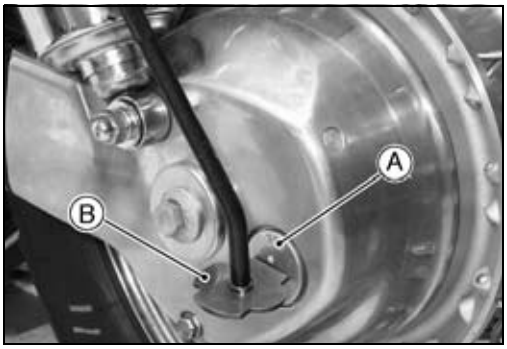

- Support the motorcycle perpendicular to the ground.

  Special Tools - Jack: 57001-1238
  Attachment Jack: 57001-1398

- Unscrew the filler plug [A], using the filler cap driver [B] (special tool).

  Special Tool - Filler Cap Driver: 57001-1454

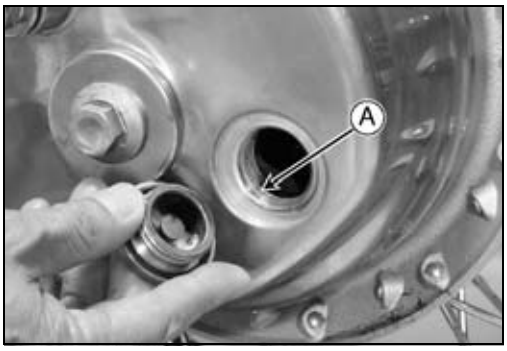

○The oil level [A] should come to the bottom of the filler opening.

★If it is low, first check the final gear case for oil leakage, remedy it if necessary, and add oil through the filler opening. Use the same type and brand of oil that is already in the final gear case.

- Install the filler plug.

Oil Change

- Warm up the oil by running the motorcycle so that the oil will pick up any sediment and drain easily. Stop the motorcycle and turn the ignition switch OFF.
- Place an oil pan beneath the final gear case, and remove the drain bolt.

⚠ WARNING

When draining or filling the final gear case, be careful that no oil gets on the tire, spoke, or rim. Clean off any oil that inadvertently gets on them with a high-flash point solvent.

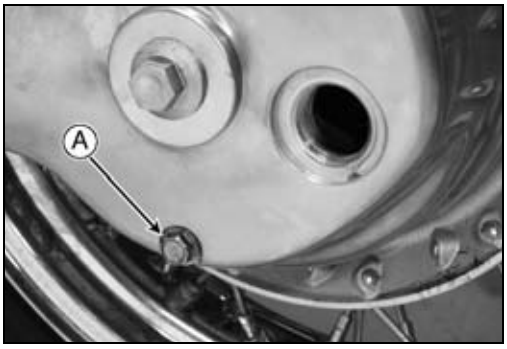

- After the oil has completely drained out, install the drain bolt [A] with a new gasket.

  Torque - Final Gear Case Drain Bolt: 8.8 N·m (0.90 kgf·m, 78 in·lb)

- Fill the final gear case with the specified oil and quantity.

  Final Gear Case Oil

Amount:	**200 mL (6.8 US oz)**
Grade:	**API GL-5 hypoid gear oil**
Viscosity:	**When above 5°C (41°F): SAE 90**
	When below 5°C (41°F): SAE 80

NOTE

○*The term "GL-5" indicates a quality and additive rating. A "GL-6" rated hypoid gear oil can also be used.*

- Be sure the O-ring is in place, and install the filler plug.

Downloaded from www.vulcanriders-sweden.org

Final Gear Case

Removal

★If the final gear case is to be disassembled, drain the final gear case oil.

- Remove the rear wheel (see Wheels/Tires chapter).
- Remove the left shock absorber [A] from its studs by taking off the nuts.
- Remove the final gear case by taking off the nuts [B]. The spring comes off with the case.

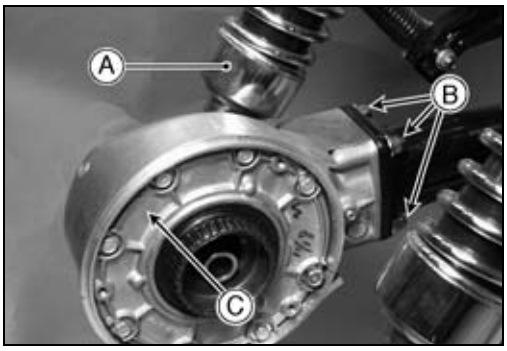

NOTE

○*If the final gear case is full of oil, place the case so that the breather hole [C] is on top.*

Installation

- Lubricate the propeller shaft joint (see Propeller Shaft Joint Lubrication).
- Install the spring so that the smaller diameter end [A] faces toward the final gear case.
- Fit the pinion gear splines into the propeller shaft joint while turning the ring gear hub.
- Tighten the final gear case mounting nuts to the specified torque.

Torque - Final Gear Case Mounting Nuts: 34 N·m (3.5 kgf·m, 25 ft·lb)

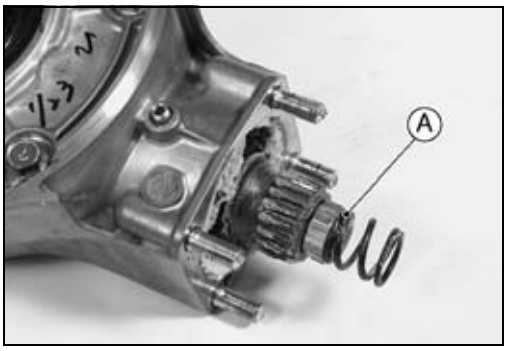

★If the final gear case oil was drained, fill the case with oil.

Disassembly

VN1500-N4 ~

- Remove the final gear case.
- Using 6 mm bolts [A] with 10 mm pitch threads, jack up the pinion gear assembly [B].
- Remove the pinion gear assembly and shim(s) [C] from the final gear case.

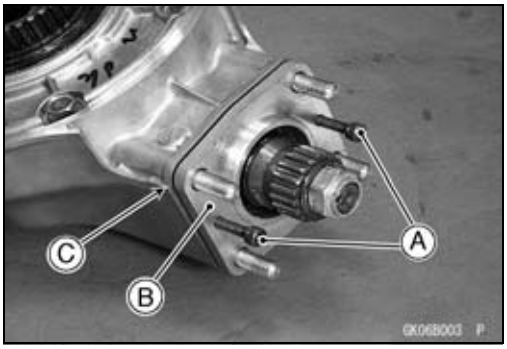

VN1500-N1 ~ N3, N4 ~

- Remove the final gear case cover bolts [A].
- Use three tapped holes [B] to lift the ring gear assy from the gear case. The shim(s) comes off with the assy.

NOTE

○*Do not disassemble the ring gear assy (ring gear, ring gear hub, and final gear case cover), but the oil seal can be removed.*

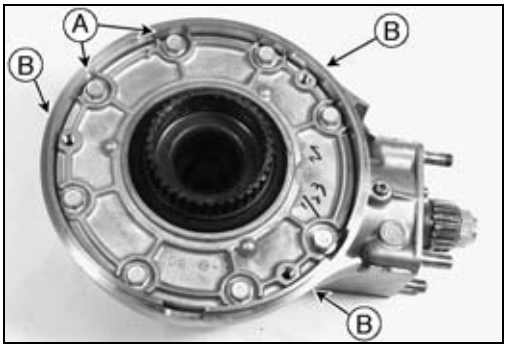

Downloaded from www.vulcanriders-sweden.org

Final Gear Case

● To remove the ring gear oil seal [A], heat the ring gear assy in an oil bath to **120 ~ 150°C (248 ~ 302°F)**, then pry out the oil seal with an awl or other tool. Be careful not to scratch the sealing surface on the ring gear hub.

CAUTION
Do not heat the case with a blowtorch. This will warp the case.

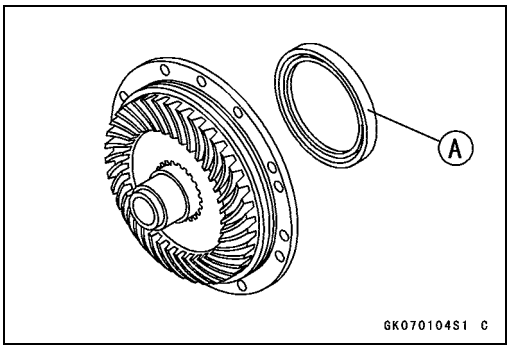

● Remove the snap ring [A] and pull out the needle bearing [B].

★If the small ring gear oil seal [C] is damaged, remove it using the oil seal and bearing remover.

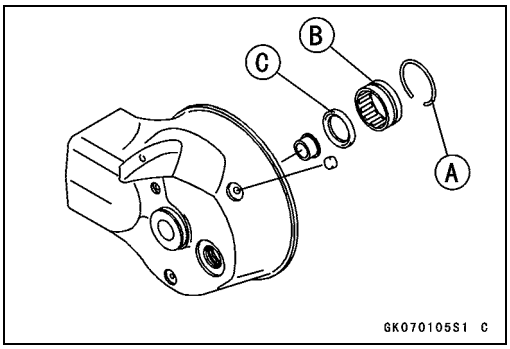

○Remove the small ring gear oil seal if damaged.

Special Tool - Oil Seal & Bearing Remover [D]: 57001-1058

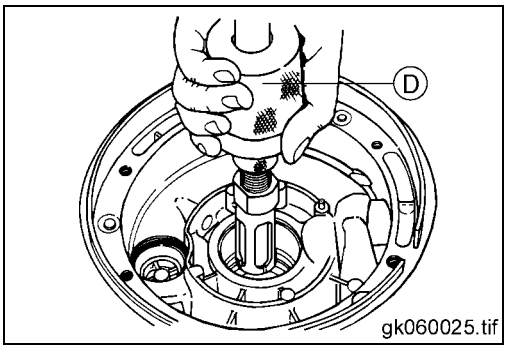

Downloaded from www.vulcanriders-sweden.org

Final Gear Case

Final Gear Case (VN1500 N1~ N3)

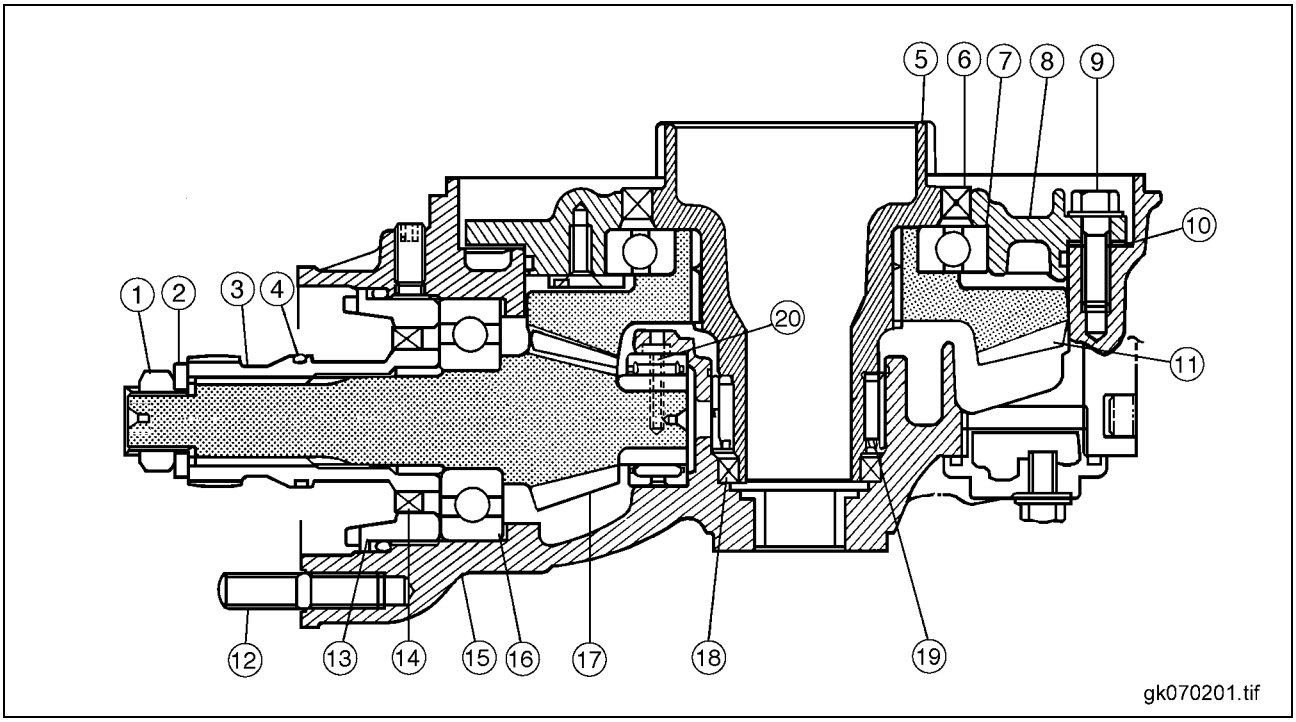

1. Pinion Gear Nut
2. Washer
3. Pinion Gear Joint
4. O-ring
5. Ring Gear Hub
6. Ring Gear Oil Seal
7. Ball Bearing
8. Final Gear Case Cover
9. Cover Mounting Bolts
10. Ring Gear Shim(s)
11. Ring Gear
12. Studs
13. Pinion Bearing Retainer
14. Oil Seal
15. Final Gear Case
16. Ball Bearing (Four-point Contact)
17. Pinion Gear
18. Small Ring Gear Oil Seal
19. Needle Bearing
20. Spring Pin

Downloaded from www.vulcanriders-sweden.org

Final Gear Case

Final Gear Case (VN1500-N4 ~)

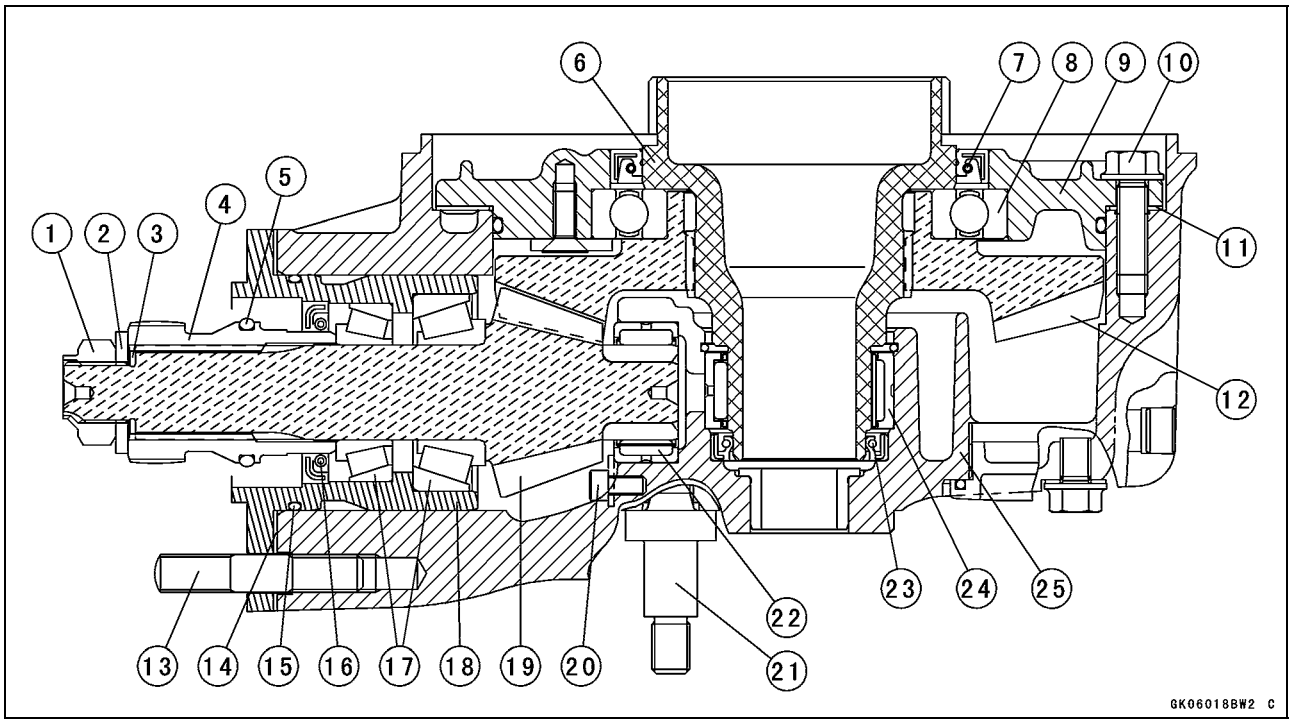

1. Pinion Gear Nut
2. Washer
3. Shim(s) for Preload
4. Pinion Gear Joint
5. O-ring
6. Ring Gear Hub
7. Ring Gear Oil Seal
8. Ball Bearing
9. Final Gear Case Cover
10. Cover Mounting Bolts
11. Ring Gear Shim(s)
12. Ring Gear
13. Studs
14. Pinion Gear Shim(s)
15. O-ring
16. Oil Seal
17. Tapered Roller Bearings
18. Pinion Gear Bearing Housing
19. Pinion Gear
20. Retainer Bolt
21. Stud
22. Needle Bearing
23. Small Ring Gear Oil Seal
24. Needle Bearing
25. Final Gear Case

VN1500-N1 ~ N3

- Pry open the staking [A] on the pinion gear nut [B], and unscrew the nut while holding the final gear case with the pinion gear holder [C].

  Special Tool - Pinion Gear Holder, m1.9: 57001-1165

- Remove the washer and pinion gear joint with the O-ring.
- Pull out the oil seal in the pinion bearing retainer using a puller.

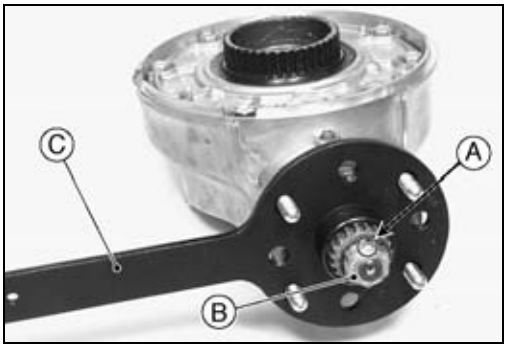

Downloaded from www.vulcanriders-sweden.org

Final Gear Case

VN1500-N1 ~ N3

● Remove the retainer stop screw [A] and then unscrew the pinion bearing retainer with the bearing retainer wrench [C], while holding the final gear case with a holder [B].

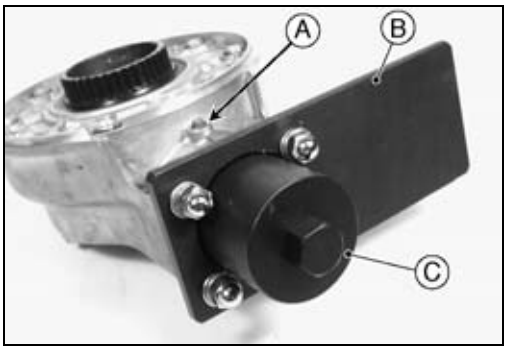

NOTE

○*The bearing retainer has left-hand threads, so, turn it clockwise for removal.*

Special Tools - Bearing Retainer Wrench: 57001-1251
Final Gear Holder: 57001-1250

VN1500-N1 ~ N3

● Take the retainer [A] and pinion gear assy [B] out of the final gear case.

○Pull out the shim, stop screw and plug from the final gear case.

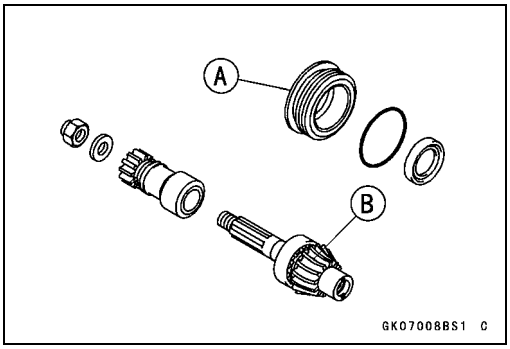

Pinion Gear Removal (VN1500-N4 ~)

● Pry open the staking [A] on the pinion gear nut [B].

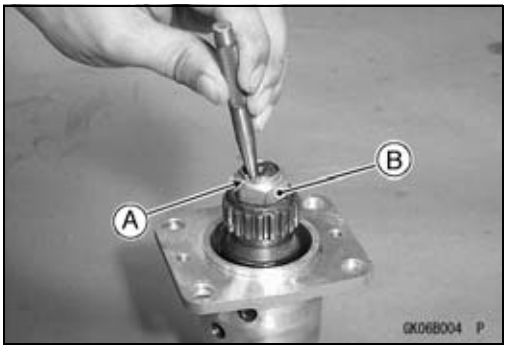

● Unscrew the nut [A] while holding the pinion gear assembly [B] with the pinion gear holder [C].

Special Tool - Pinion Gear Holder: 57001-1165

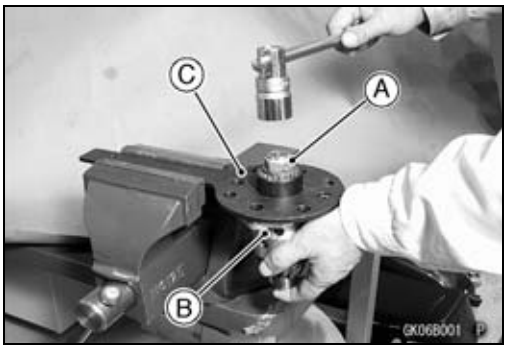

● Remove:
Washer [A]
Shim(s) [B]
Pinion gear joint [C] with the O-ring [D]
Pinion gear [E] with the Tapered Roller Bearing [F]

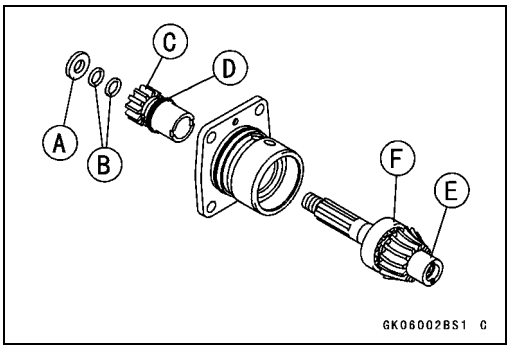

Downloaded from www.vulcanriders-sweden.org

Final Gear Case

- Drive out the bearing outer race from the pinion gear bearing housing [A].

  Special Tool - Oil Seal & Bering Remover: 57001-1058 [B]

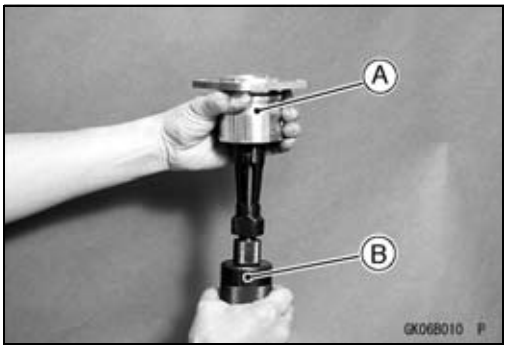

- Drive out the tapered roller bearing [A] in the pinion gear bearing housing [B] and the oil seal [C] using the bearing driver set [D].

  Special Tool - Bearing Driver Set: 57001-1129

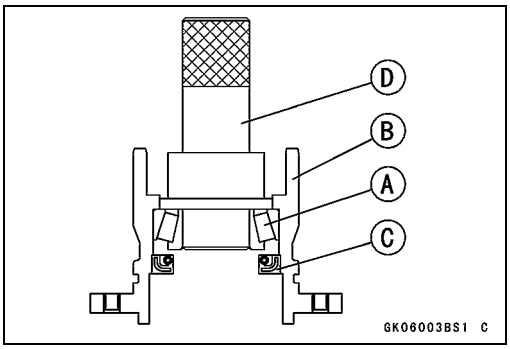

Pinion Gear Installation (VN1500-N4 ~)

- The pinion gear and ring gear are lapped as a set in the factory to get the best tooth contact. They must be replaced as a set.
- Check the tapered roller bearing (see Tapered Roller Bearing Inspection).
- Apply a hypoid gear oil to the roller bearings.

- Drive the tapered roller bearing [A] into the pinion gear bearing housing [B] using the bearing driver set [C].

  Special Tool - Bearing Driver Set: 57001-1129

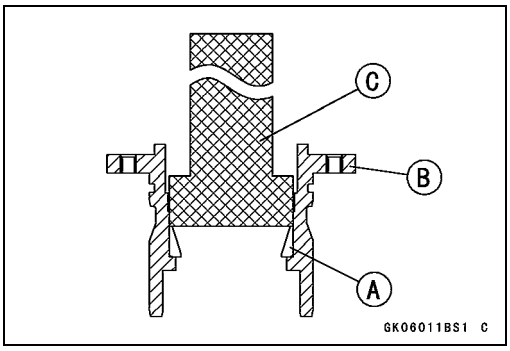

- Drive the tapered roller bearing outer race [A] into the pinion gear bearing housing [B] using the bearing Driver set [C].

  Special Tool - Bearing Driver Set: 57001-1129

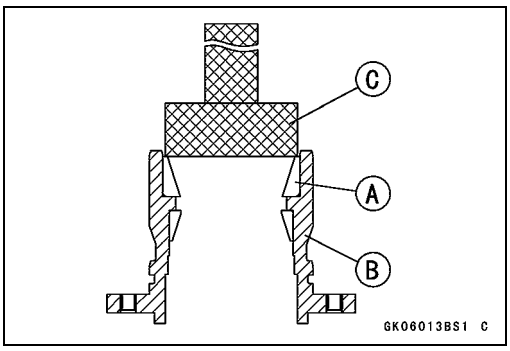

Downloaded from www.vulcanriders-sweden.org

Final Gear Case

● Insert the pinion gear [A].
○Install the pinion gear with the tapered roller bearing as [B] one unit.
● Check the O-ring [C] on the pinion gear joint [D] for any kind of damage.
★Replace it if necessary.
● Apply a hypoid gear oil to the O-ring.
● Install the pinion gear joint, shim(s) [E] and washer [F].

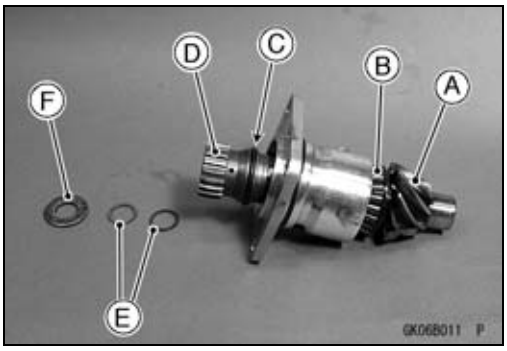

● Replace the pinion gear nut with a new one.
● Apply:

Molybdenum Disulfide Oil-Threads and Seating Surface of Pinion Gear Nut

● Using the pinion gear holder [A], tighten the pinion gear nut [B].

Special Tool - Pinion Gear Holder: 57001-1165

Torque - Pinion Gear Nut: 127 N·m (13 kgf·m, 94 ft·lb)

○Check the pinion gear bearing preload (see this chapter).
● Remove:
Pinion Gear Nut
Washer Shim(s)
Pinion Gear Joint
Pinion Gear Assy

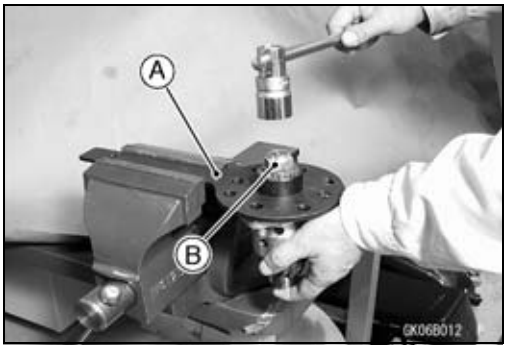

● Replace the oil seal with a new one.
● Drive the oil seal [A] using the bearing driver set [B].

Special Tool - Bearing Driver Set: 57001-1129

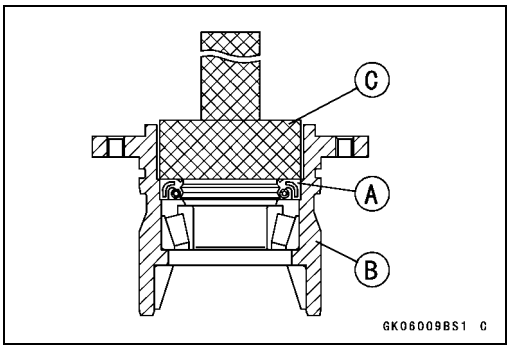

● Reinstall the above removed parts.
○Stake [A] the pinion gear nut with a punch.

CAUTION

When staking the nut, be careful not to apply shock to the pinion gear and its bearing. Such a shock could damage the pinion gear and/or bearing.

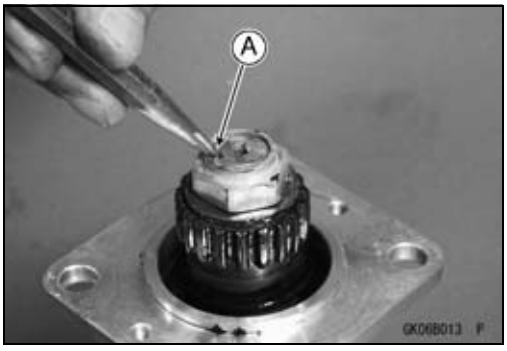

Downloaded from www.vulcanriders-sweden.org

Final Gear Case

Pinion Gear Bearing Preload Adjustment (VN1500-N4 ~)

Preload Measurement

- Check and adjust the bearing preload in the following case.

○When any of the parts listed below are replaced with new ones.

Tapered roller bearings
Bevel gears
Bearing housing
Pinion gear joint

○When the pinion gear nut is loosened, even if the purpose is not to replace the parts.

- Assemble the pinion gear bearing housing, and tighten the pinion gear nut to the specified torque. Oil seal installation is not required until the correct bearing preload is obtained.

CAUTION

To start with, choose a shim or shims so that the bearings are just SNUG with NO play but also with NO preload.
Any over-preload on the bearings could damage the bearings.

- Apply a little hypoid gear oil to the bearings, and turn the gear shaft more than 5 turns to allow the bearings to seat.
- Measure the bearing preload. Bearing preload is defined as the force or torque which is needed to start the gear shaft turning.

Preload for Pinion Gear Bearing

Using Spring Scale:

3.0 ~ 5.0 N (0.30 ~ 0.50 kg, 0.7 ~ 1.1 lb)

Using Torque Wrench:

0.6 ~ 1.0 N·m (0.06 ~ 0.10 kgf·m, 5.2 ~ 8.7 in·lb)

NOTE

○*Preload can be measured either with a spring scale or a beam-type torque wrench. When measured with a spring scale, the preload is designated by force (N, kg, lb), and when measured with a torque wrench, it is designated by torque N·m, (kg·m, in·lb).*

Using Spring Scale

- Hook the spring scale [A] on the handle at the point 200 mm (7.87 in.) [B] from the center of the gear shaft.
- Hold the bearing housing in a vise so that the gear shaft axis is vertical.
- Apply force to the handle horizontally and at a right angle to it.

Special Tool - Pinion Gear Holder: 57001-1165 [C]

★If the preload is out of the specified range, replace the shims under the flat washer, and re-check the preload. Refer to the next paragraph to select suitable shims.

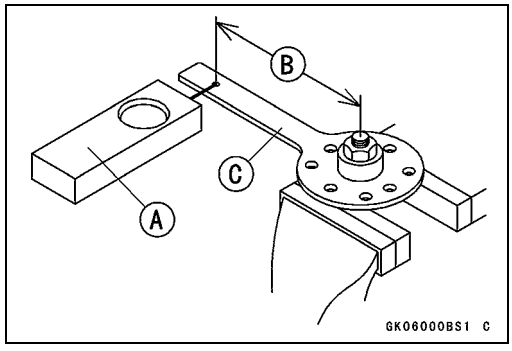

Downloaded from www.vulcanriders-sweden.org

Final Gear Case

Preload Adjustment

- To increase preload, decrease the thickness of the size of the shim(s). To decrease preload increase the thickness of the shim(s).
- Change the thickness a little at a time.
- Re-adjust the bearing preload, and re-adjust if necessary.

Shims for Preload Adjustment

Thickness	Part Number
0.1	92025-1219
0.2	92025-1220
0.3	92025-1221
0.5	92025-1222
0.6	92025-1223
0.7	92025-1224
0.8	92025-1225
*0.9	92025-1226
1.0	92025-1227
1.30	92025-1214
1.32	92025-1215
1.34	92025-1216
1.36	92025-1217
1.38	92025-1218

*: Standard

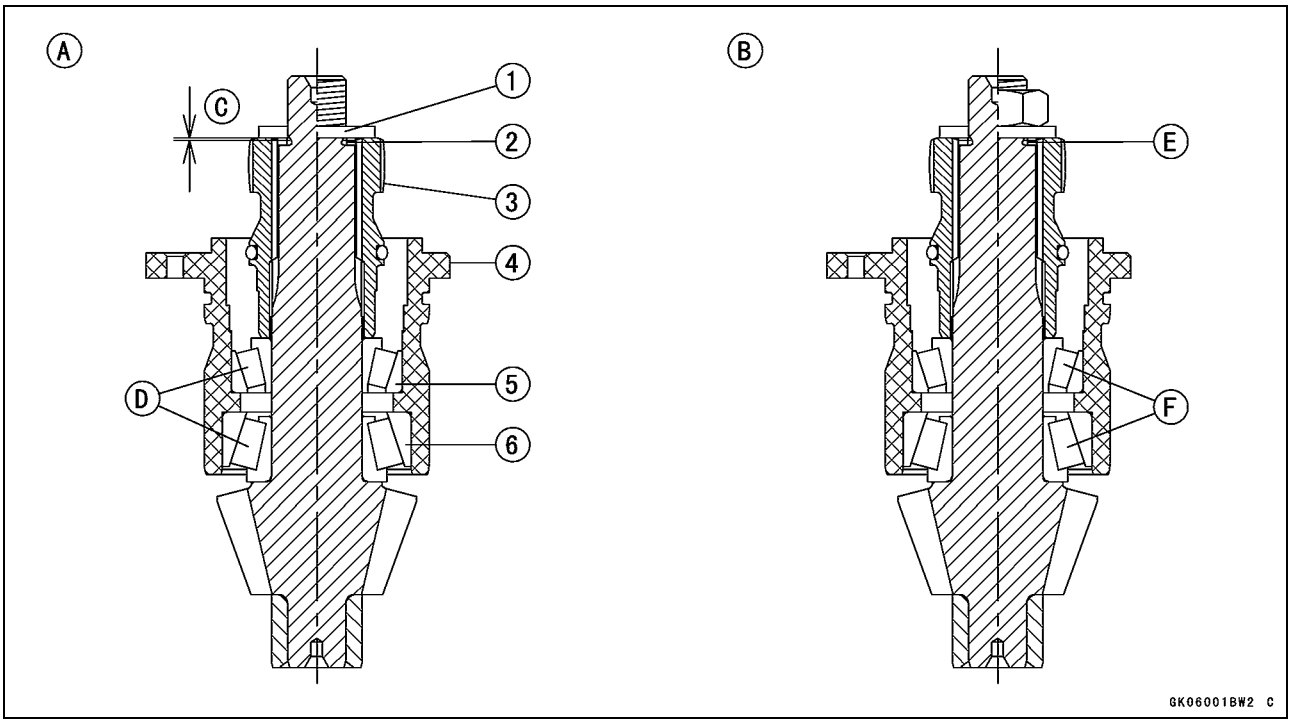

1. Washer
2. Shim(s)
3. Pinion Gear Joint
4. Bearing Housing
5. Tapered Roller Bearing
6. Tapered Roller Bearing

Before Tightening [A]
After Tightening [B]
Initial Clearance [C]
Under No Preload [D]
No Clearance [E]
Under Preload [F]

Downloaded from www.vulcanriders-sweden.org

Final Gear Case

Assembly

○The ring gear and pinion gear are lapped as a set in the factory to get the best tooth contact. They must be installed as a pair, and never replace one without the other.

- Press the small ring gear oil seal [A] until it bottoms out with its spring [B] facing inward.
- Apply a thin coat of high temperature grease to the oil seal lip the ring gear oil seal.

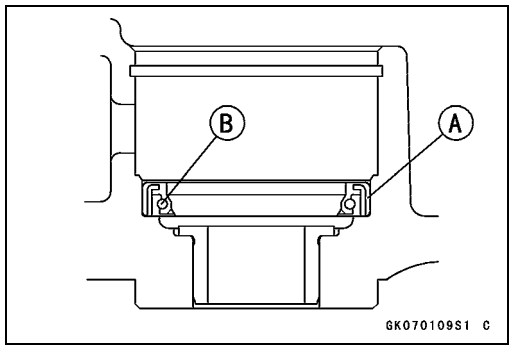

VN1500-N4 ~

- Replace the needle bearings [A] with new ones.
- Apply a hypoid gear oil to the roller parts of the needle bearings.

NOTE

○*Install the bearing so that the marked side faces out.*
○*Press in the bearings until they are bottomed.*

Special Tool - Bearing Driver Set: 57001-1129

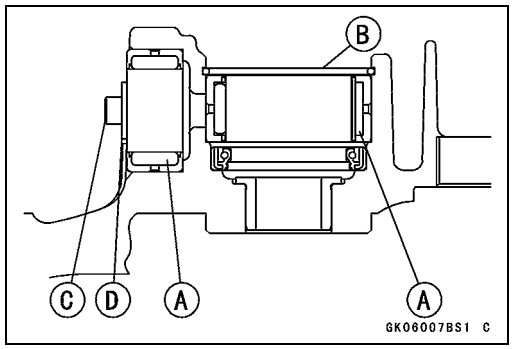

- Install the snapring [B] secure.
- Apply a non-permanent locking agent to the bearing retainer bolt [C].
- Install the washer [D] and the bearing retainer bolt.
- Tighten:

Torque - Bearing Retainer Bolt: 7 N·m (0.7 kgf·m, 61 in·lb)

VN1500-N1 ~ N3, N4 ~

- Install the ring gear oil seal with its spring [A] facing inward using a suitable driver until the face of the seal is even [B] with the end of the hole.

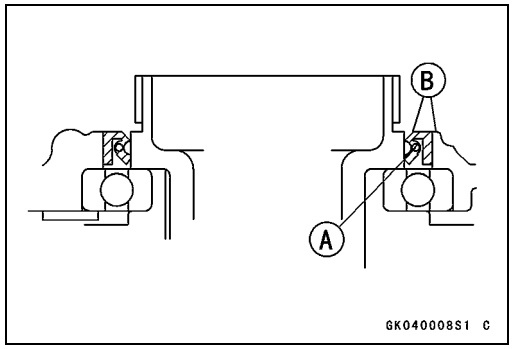

- Blow the breather hole [A] in the final gear case cover clean with compressed air.
- Apply a non-permanent locking agent to the threads of each stud and install them to the case if they were removed.
- Reinstall the original ring gear shim(s) to keep the gear backlash and the tooth contact unchanged.
- Tighten:

Torque - Final Gear Case Cover Bolts:
ϕ10: 34 N·m (3.5 kgf·m, 25 ft·lb)
ϕ8: 23 N·m (2.3 kgf·m, 17 ft·lb)

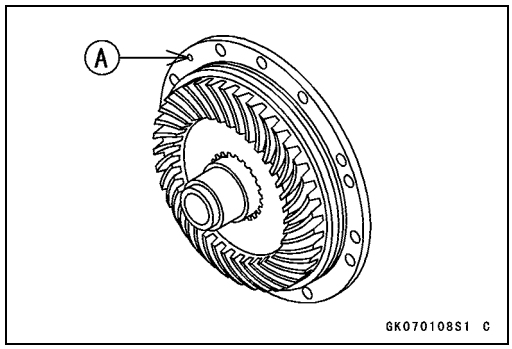

VN1500-N4 ~

- Insert the pinion gear assembly into the final gear housing.

○Reinstall the pinion gear assembly shim(s) to keep the gear backlash and the tooth contact unchanged.

Downloaded from www.vulcanriders-sweden.org

Final Gear Case

VN1500-N1 ~ N3

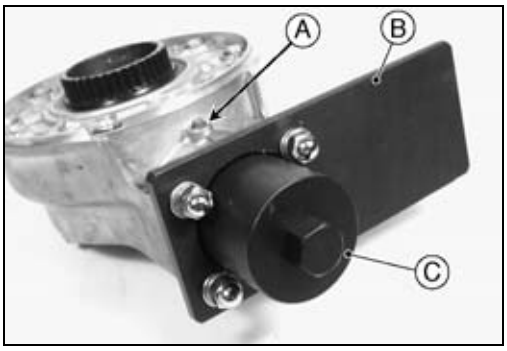

- Install the pinion bearing retainer.
- Reinstall the original pinion gear shim(s) to keep the gear backlash and the tooth contact unchanged.
- Using a holder [B] and bearing retainer wrench [C], tighten the pinion bearing retainer.

Special Tool - Bearing Retainer Wrench: 57001-1251

○Turn the bearing retainer counterclockwise.

- Insert the plug into the retainer stop screw [A].
- Apply:

Non-permanent Locking Agent -
Retainer Stop Screw

- Tighten:

Torque - Pinion Bearing Retainer: 245 N·m (25.0 kgf·m, 181 ft·lb)
Retainer Stop Screw: 16 N·m (1.6 kgf·m, 12 ft·lb)

VN1500-N1 ~ N3

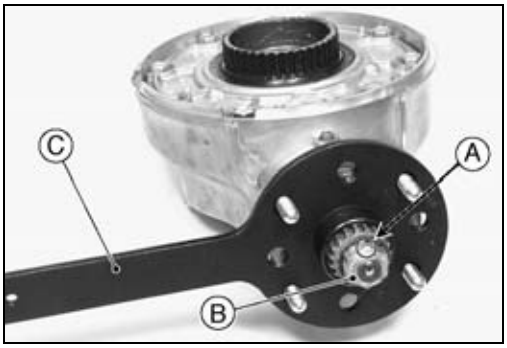

- Apply:

Molybdenum Disulfide Oil -
Threads and Seating Surface of Pinion Gear Nut, Washer

- Using the pinion gear holder [C], tighten the pinion gear nut [B].

Special Tool - Pinion Gear Holder, m1.9: 57001-1165

Torque - Pinion Gear Nut: 127 N·m (13 kgf·m, 94 ft·lb)

○Stake [A] the pinion gear nut with a punch.

CAUTION

When staking the nut, be careful not to apply shock to the pinion gear and its bearing. Such a shock could damage the pinion gear and/or bearing.

Bevel Gear Inspection

- Visually check the bevel gears for scoring, chipping, or other damage.

★Replace the bevel gears as a set if either gear is damaged.

Pinion Gear Joint Inspection

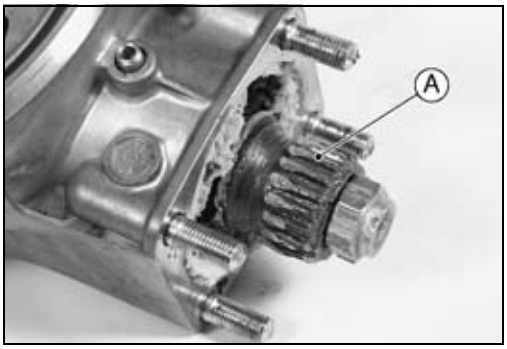

- Visually inspect the splines [A] of the pinion gear joint.

★If they are badly worn or chipped, replace the joint with a new one. Also, inspect the propeller shaft sliding joint.

Downloaded from www.vulcanriders-sweden.org

Final Gear Case

Final Bevel Gear Adjustment

○The **backlash** and **tooth contact pattern** of the bevel gears must be correct to prevent the gears from making noise and being damaged.

● After replacing any of the backlash-related parts, be sure to check and adjust the backlash and tooth contact of the bevel gears. First, adjust backlash, and then tooth contact by replacing shims.

○The amount of backlash is influenced by the ring gear position more than by the pinion gear position.

○Tooth contact locations is influenced by pinion gear position more than by ring gear position.

Backlash-Related Parts

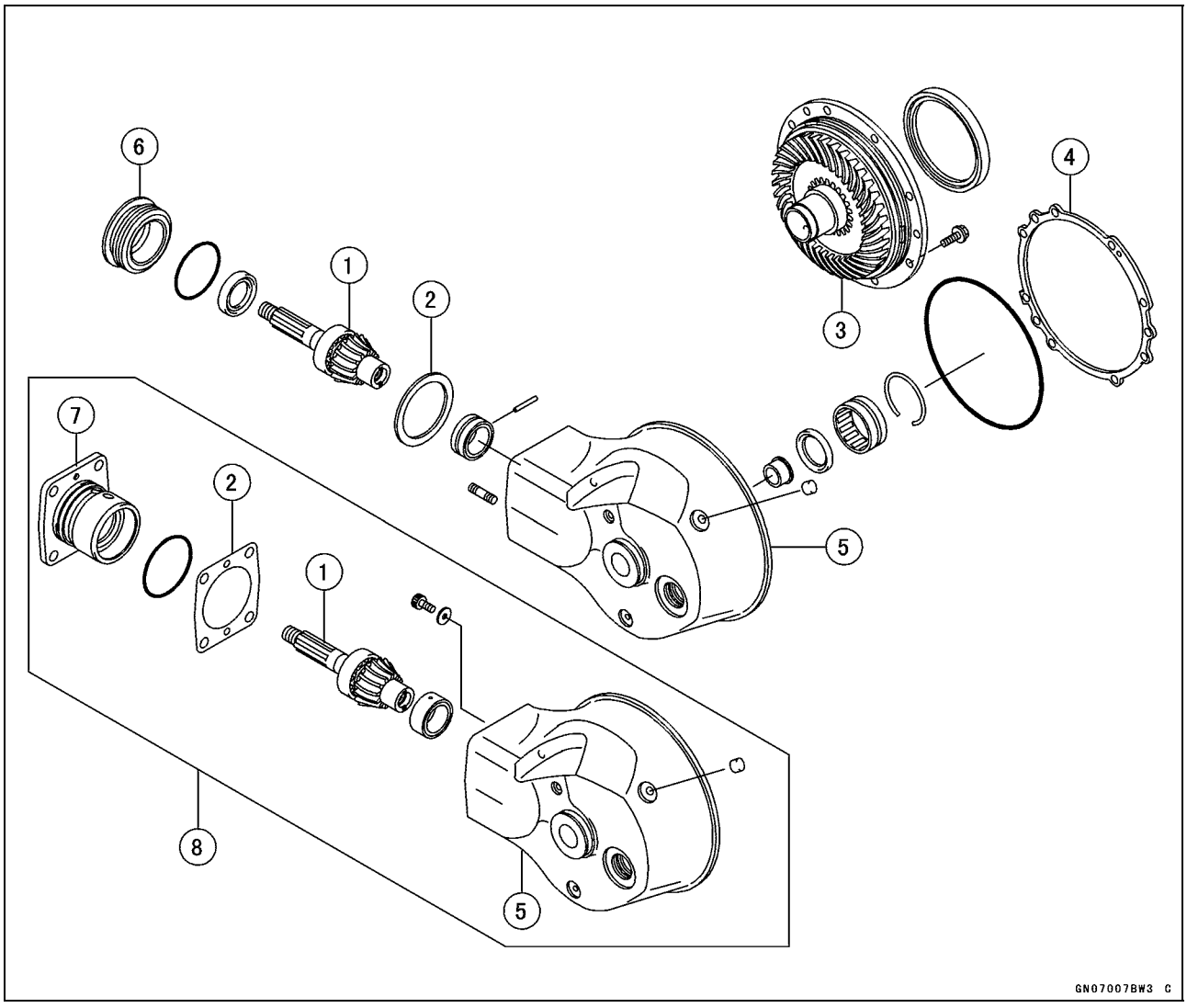

1. Pinion Gear Assy
2. Pinion Gear Shim(s)
3. Ring Gear Assy
4. Ring Gear Shim(s)
5. Final Gear Case
6. Pinion Bearing Retainer
7. Pinion Gear Bearing Housing
8. VN1500-N4 ~

Downloaded from www.vulcanriders-sweden.org

Final Gear Case

Ring Gear Shims for Backlash Adjustment

Thickness (mm)	Parts Number
0.15	92025-1783
0.5	92025-1784
0.6	92025-1785
0.7	92025-1786
0.8	92025-1787
0.9	92025-1788
1.0	92025-1789
1.2	92025-1790

Pinion Gear Shims for Tooth Contact Adjustment

Thickness (mm)	Parts Number	
	VN1500-N1 ~ N3	VN1500-N4 ~
0.10	92025-1733	– – –
0.15	92025-1734	92180-0009
0.5	92025-1735	92180-0010
0.6	92025-1736	92180-0011
0.7	92025-1737	92180-0012
0.8	92025-1738	92180-0013
0.9	92025-1739	92180-0014
1.0	92025-1740	92180-0015
1.2	92025-1741	92180-0016

Backlash Adjustment

- Clean any dirt and oil off the bevel gear teeth with a high -flash point solvent.

CAUTION
Do not install the O-ring or oil seals during adjustment.

VN1500-N1 ~ N3

- Install the pinion gear assy with the primary shim (**1.0 mm (0.04 in.) thickness**), and tighten the pinion bearing retainer to the specified torque.

Torque - Pinion Bearing Retainer: 245 N·m (25 kgf·m, 181 ft·lb)

VN1500-N4 ~

- Install the pinion gear bearing housing with the primary sim (1.0 mm (0.04 in.) thickness).
- Hold the pinion gear steady with the pinion gear holder and tighten the final gear case mounting nuts to the specified torque.

Special Tool - Pinion Gear Holder: 57001-1165

Torque - Final Gear Case Mounting Nuts: 34 N·m (3.5 kgf·m, 25 ft·lb)

VN1500-N1 ~ N3, N4 ~

- Install the ring gear assy with the primary shim (**1.0 mm thickness (0.04 in.)**), and tighten the cover bolts to the specified torque.

Torque - Final Gear Case Cover Bolts:
M10: 34 N·m (3.5 kgf·m, 25 ft·lb)
M8: 23 N·m (2.3 kgf·m, 17 ft·lb)

○Check the backlash during tightening of the cover bolts, and stop tightening them immediately if the backlash disappears. Then, change the ring gear shim to a thicker one.

Downloaded from www.vulcanriders-sweden.org

Final Gear Case

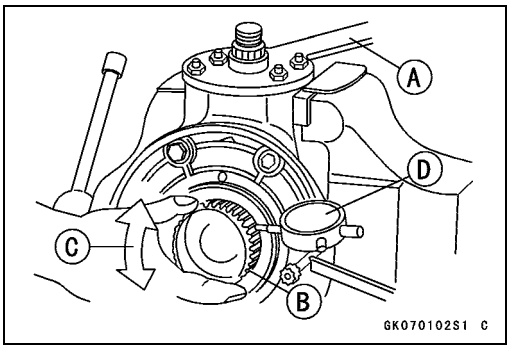

- Mount a dial gauge [D] on a vise so that the tip of the gauge is against the splines of the ring gear hub.
- To measure the backlash, turn the ring gear hub [B] back and forth [C] while holding the pinion gear steady with the pinion gear holder [A]. The difference between the highest and the lowest gauge reading is the amount of backlash.

Special Tool - Pinion Gear Holder, m1.9: 57001-1165

○Measure backlash at three locations equally spaced on the splines.

Final Bevel Gear Backlash: (at ring gear hub splines)
0.06 ~ 0.09 mm (0.0024 ~ 0.0035 in.) (VN1500-N1 ~ N3)
0.10 ~ 0.20 mm (0.0390 ~ 0.0079 in.) (VN1500-N4 ~)

★If the backlash is out of the limit, replace the ring gear shims. To increase backlash, increase the thickness of the shim(s). To decrease backlash, decrease the thickness of the shim(s).

★Change the thickness a little at a time.

- Recheck the backlash, and readjust as necessary.

Tooth Contact Adjustment

- Clean any dirt and oil off the bevel gear teeth with a high -flash point solvent.
- Apply checking compound to 4 or 5 teeth of the pinion gear.

NOTE

○*Apply checking compound to the teeth in a thin, even coat with a fairly stiff paint brush. If painted too thickly, the exact tooth pattern may not appear.*

○*The checking compound must be smooth and firm, with the consistency of tooth paste.*

○*Special compounds are available at automotive supply stores for the purpose of checking differential gear tooth patterns and contact.*

VN1500-N1 ~ N3

- Install the shim(s) and pinion gear assy, and tighten the bearing retainer to the specified torque.

Torque - Pinion Bearing Retainer: 245 N·m (25 kgf·m, 181 ft·lb)

- Install the shim(s) and ring gear assy, and tighten the cover bolts to the specified torque.

Torque - Final Gear Case Cover Bolts:
M10: 34 N·m (3.5 kgf·m, 25 ft·lb)
M8: 23 N·m (2.3 kgf·m, 17 ft·lb)

Downloaded from www.vulcanriders-sweden.org

Final Gear Case

● Turn the pinion gear for one revolution [B] back and forth, while creating a drag on the ring gear hub [A].

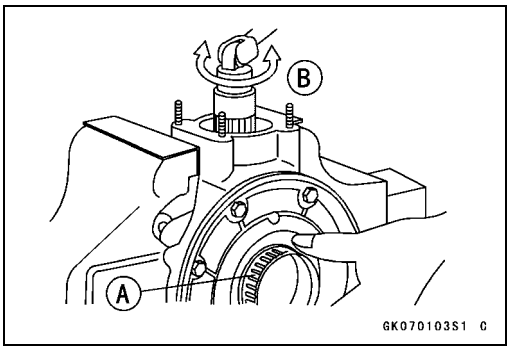

VN1500-N4 ~

● Hold the pinion gear assembly with the final gear case holder [A].

Special Tool - Final Gear Case Holder: 57001-1250

Torque - Final Gear Case Mounting Nuts: 34 N·m (3.5 kgf·m, 25 ft·lb)

● Turn the pinion gear for one revolution [B] back and forth, while creating a drag on the ring gear hub [C].

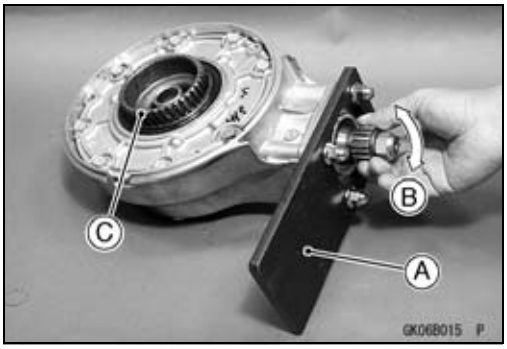

VN1500-N1 ~ N3, N4 ~

● Remove the ring gear assy and pinion gear assy to check the drive pattern and coast pattern of the bevel gear teeth. The tooth contact patterns of both (drive and coast) sides should be centrally located between the top and bottom of the tooth. The drive pattern can be a little closer to the toe and the coast pattern can be a somewhat longer and closer to the toe.

★If the tooth contact pattern is incorrect, replace the pinion gear shim(s), following the examples shown. Then erase the tooth contact patterns, and check them again. Also check the backlash every time the shim(s) are replaced. Repeat the shim change procedure as necessary.

NOTE

○*If the backlash is out of the standard range after changing the pinion gear shim(s), replace the ring gear shim(s) to correct the backlash before checking the tooth contact pattern.*

Bevel Gear Inspection

● Remove the ring gear assy and pinion gear from the final gear case (see Ring Gear Disassembly and Pinion Gear Disassembly).

● Visually check the bevel gears for scoring, chipping, or other damage.

★Replace the bevel gears as a set if either gear is damaged.

Downloaded from www.vulcanriders-sweden.org

Final Gear Case

Correct Tooth Contact Pattern: No adjustment is required.

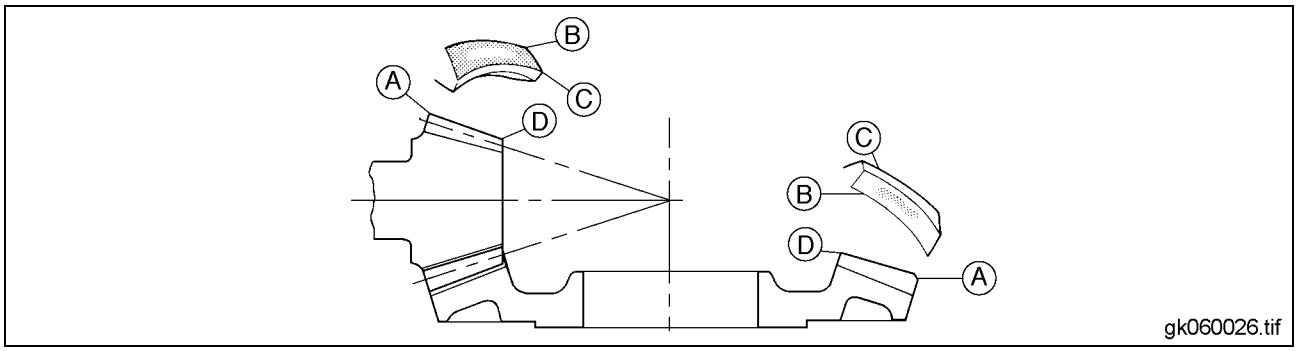

Heel [A]
Bottom [B]
Top [C]
Toe [D]

Incorrect Tooth Contact Patterns (Example 1)

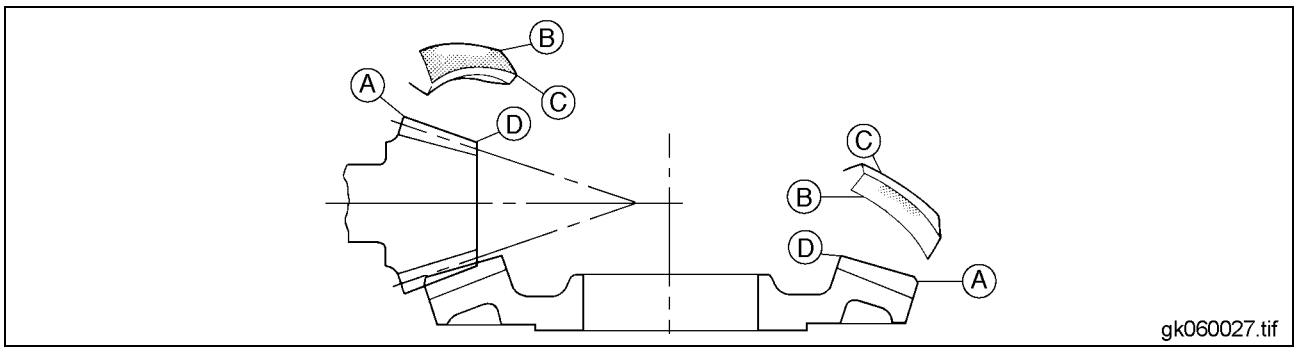

○Decrease the thickness of the pinion gear shim(s) by **0.05 mm** to correct the pattern shown above.
Heel [A]
Bottom [B]
Top [C]
Toe [D]

Incorrect Tooth Contact Patterns (Example 2)

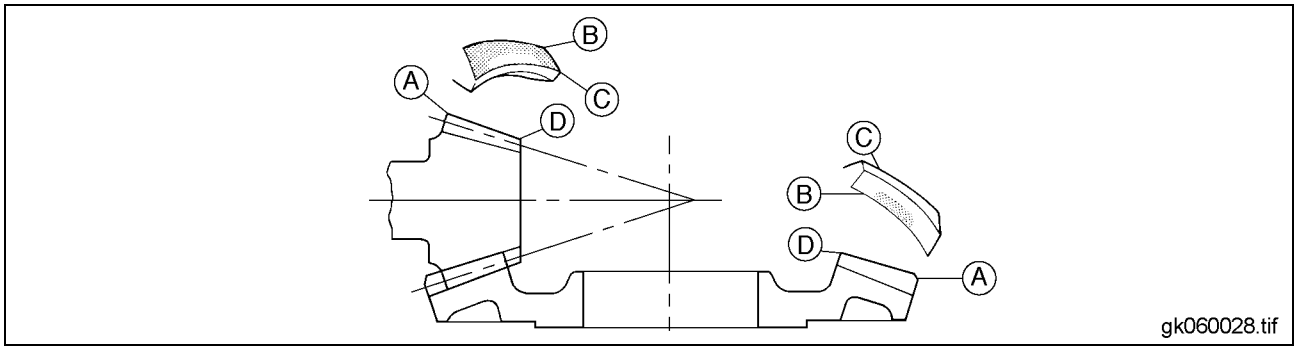

○Increase the thickness of the pinion gear shim(s) by **0.05 mm** to correct the pattern shown above.
Heel [A]
Bottom [B]
Top [C]
Toe [D]

Downloaded from www.vulcanriders-sweden.org

Propeller Shaft

Removal

- Remove:
  Rear Wheel (see Wheels/Tires chapter)
  Final Gear Case (see this chapter)
- Remove the propeller shaft from the front driven gear joint.

○Turn the propeller shaft so that the lockpin access hole [A] in the propeller shaft comes outside.

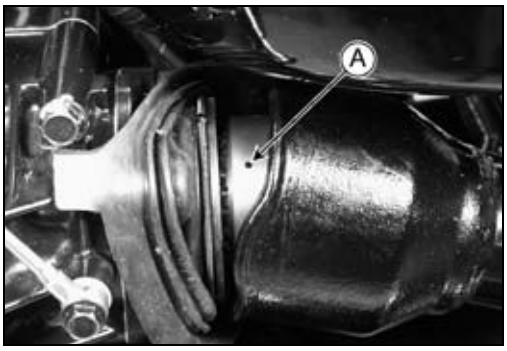

○Move back the propeller shaft and slip the propeller shaft off the driven gear joint while pushing on the lockpin.
Propeller Shaft [A]
Universal Joint [B]
Lockpin [C]
Spring [D]
Driven Gear Joint [E]

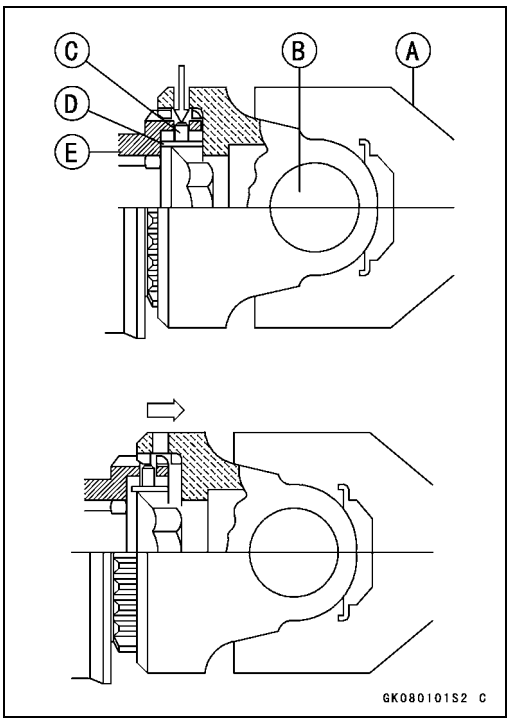

- Remove the circlip [B] from the rear end of the propeller shaft [A] using a circlip pliers.
- Remove the washer [C] and pull out the propeller shaft sliding joint [D].

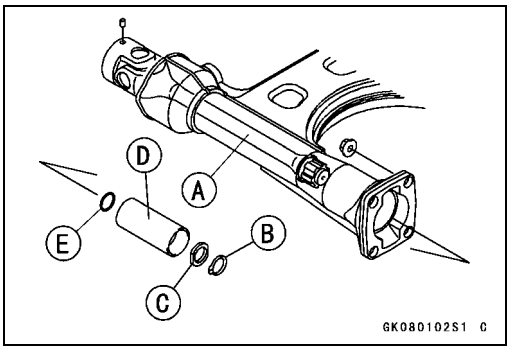

Installation

- Check the O-ring [E] on the rear end of the propeller shaft for any kind of damage, and replace it if necessary.
- Lubricate the propeller shaft joint (see Propeller Shaft Joint Lubrication).
- After connecting the propeller shaft to the driven gear joint, pull the propeller shaft rearward to check that the shaft is secured in place by the lockpin.

Downloaded from www.vulcanriders-sweden.org

Propeller Shaft

Propeller Shaft Joint Lubrication

- Wipe the old grease off the propeller shaft sliding joint and pinion joint.
- Pack the propeller shaft sliding joint with 20 mL (16 grams (0.56 US oz)) of high temperature grease [A].

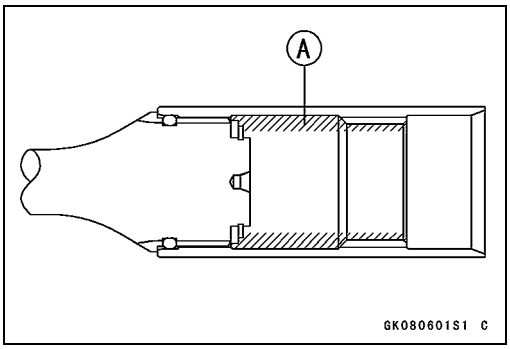

Propeller Shaft Inspection

- Check that the universal joint [A] works smoothly without rattling or sticking.

★If it does not work smoothly, the needle bearings of the universal joint are damaged. Replace the propeller shaft assy with a new one.

- Visually inspect the bearing of the shaft and the wear of the splines [B] at the rear end of the shaft.

★If it is bent at all, replace the propeller shaft assy. Do not attempt to straighten a bent shaft.

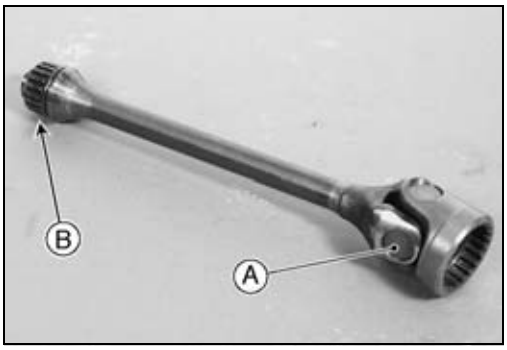

Sliding Joint Inspection

- Visually inspect the internal splines [B] of the propeller shaft sliding joint [A].

★If they are badly worn or chipped, replace the joint with a new one.

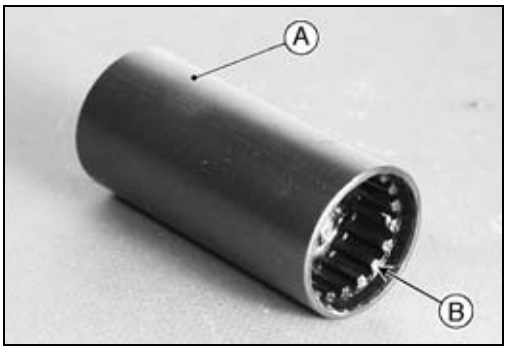

Downloaded from www.vulcanriders-sweden.org

Front Bevel Gears

Front Gear Case Removal

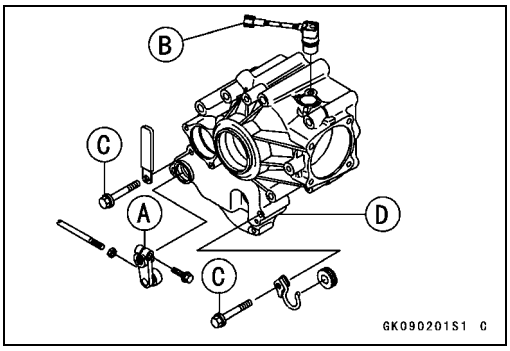

- Remove:
  Engine (see Engine Removal/Installation chapter)
  Rear Shift Lever [A]

○The speed sensor connector [B] is disconnected during engine removal.

- Unscrew the front gear case bolts [C] and remove the front gear case [D].

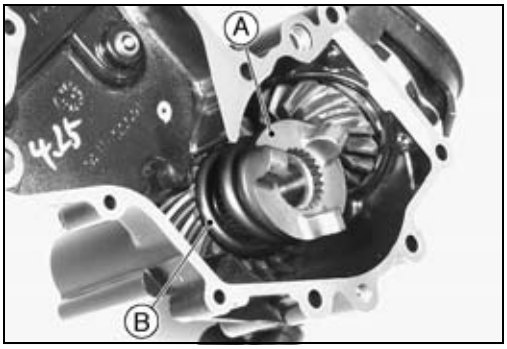

○The cam follower [A] and the damper spring [B] come off with the gear case.

- Check that the shift shaft oil seal and replace it if damaged.

Front Gear Case Installation

- Tighten the front gear case bolts to the specified torque.

Torque - Front Gear Case Bolts:
M8: 29 N·m (3.0 kgf·m, 22 ft·lb)
M6: 8.8 N·m (0.90 kgf·m, 78 in·lb) (no mark: early model)
M6: 12 N·m (1.2 kgf·m, 104 in·lb) (mark 9: late model)

Front Gear Case Disassembly

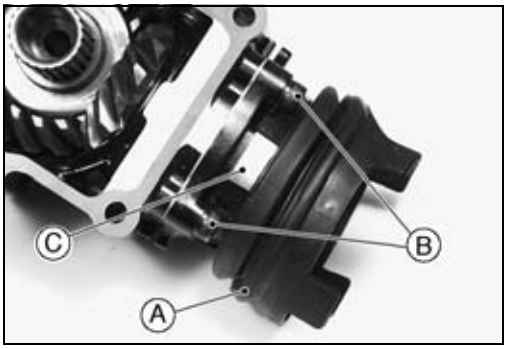

- Remove:
  Front Gear Case (see this chapter)
  Cam Follower
  Damper Spring
  Rubber Boot [A]
- Remove the driven gear assy mounting bolts [B] and pry the assy [C] off the case.

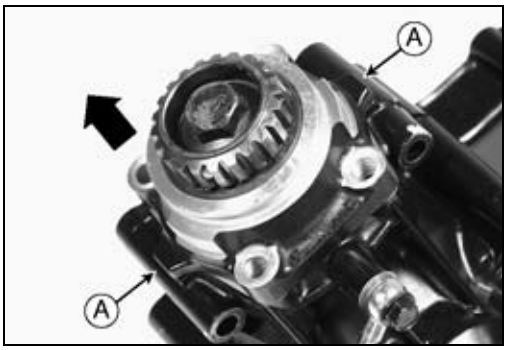

○Raise the driven gear assy, using the following pry points [A].

Downloaded from www.vulcanriders-sweden.org

Front Bevel Gears

● Remove the drive gear assy as follows.
○Pry off the gear case cap [A] with a tool.

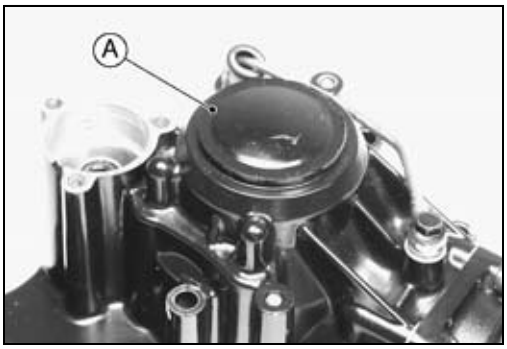

○Pry open the drive gear nut [A] with a small chisel.
○Install:
Damper Spring
Cam Follower [B]
○Unscrew the drive gear nut while holding the drive gear shaft with the drive shaft holder [C] (special tool).
Front Gear Case [D]
Socket Wrench [E]
Vise [F]

Special Tool - Drive Shaft Holder: 57001-1407

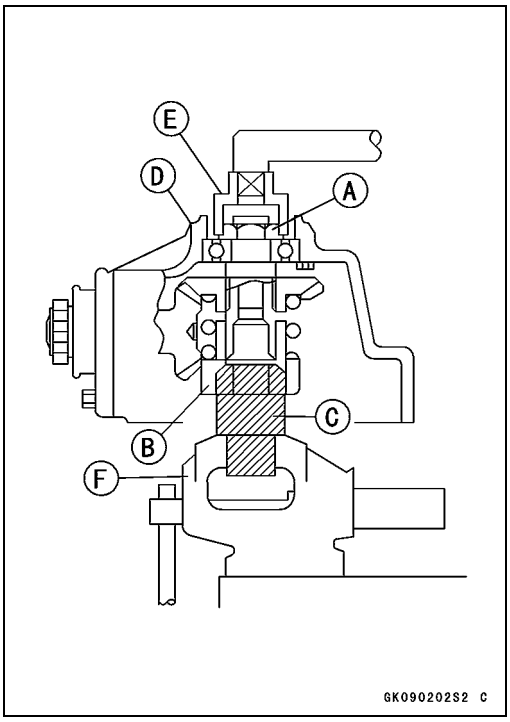

● Pull off the drive gear shaft [A], the drive gear [B], and shim(s) [C].
● Remove the bearing holder [D] from the gear case.
● Remove the drive gear shaft ball bearing [E] using the bearing driver set.
Front [F]

Special Tool - Bearing Driver Set: 57001-1129

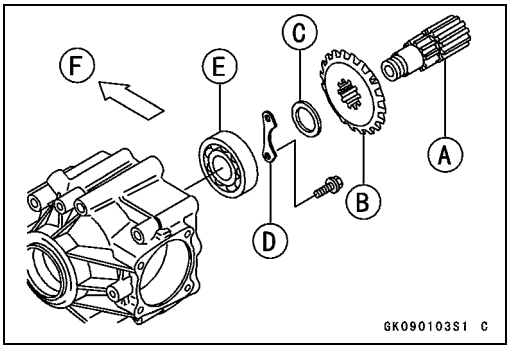

Front Gear Case Assembly

○The drive and driven gear are lapped as a set in the factory to get the best tooth contact. They must be replaced as a set.
● Press the drive gear [B] slowly with the driver [A] onto the shaft [C].

Special Tool - Bearing Driver, ϕ32: 57001-382

● Apply Non-permanent Locking Agent to the Bearing Retainer Bolts.
● Tighten:

Torque - Bearing Retainer Bolts: 8.8 N·m (0.90 kgf·m, 78 in·lb)

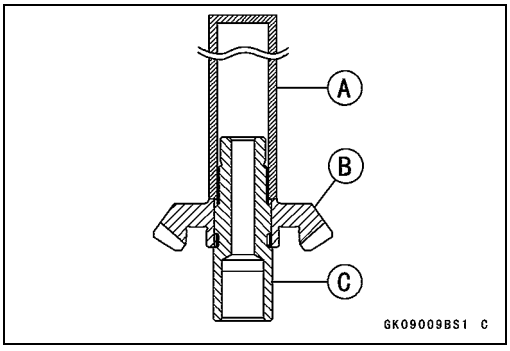

Downloaded from www.vulcanriders-sweden.org

Front Bevel Gears

- Be sure to check and adjust the bearing preload, the bevel gear backlash, and the tooth contact, when any of the backlash-related parts are replaced (see Front Bevel Gear Adjustment).
- After completing all adjustment, reassemble the front gear case.

○Replace the drive gear nut with a new one.
○Apply molybdenum disulfide oil to the threads and seating surface of the nut, and tighten it to the specified torque to settle the bearings in place.
○Loosen the nut completely and retighten it to the specified torque.

Torque - Drive Gear Nut: 265 N·m (27.0 kgf·m, 195 ft·lb)

○Stake the nut to secure it in place.

CAUTION

When staking the nut, be careful not to apply shock to the shaft and its bearing. Such a shock could damage the shaft and/or bearing.

- Install the shim [A].
- Install the driven gear assy so that the pry ribs [B] and machined surfaces [C] align.
- Tighten the driven gear assy mounting bolts to the specified torque.

Torque - Driven Gear Assy Mounting Bolts: 25 N·m (2.5 kgf·m, 18 ft·lb)

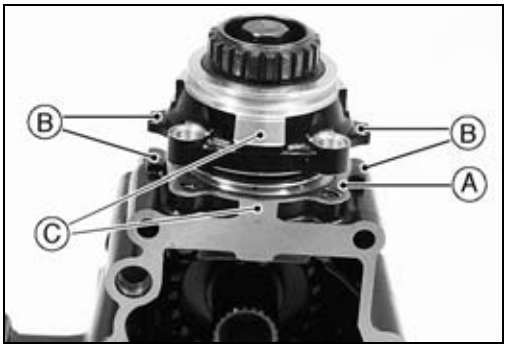

★If the oil pipe [A] was removed, use a new flat washer on each side of the fittings, and tighten the banjo bolts to the specified torque.

- Tighten:

Torque - Oil Pipe Banjo Bolts: 12 N·m (1.2 kgf·m, 104 in·lb)

○Tighten the front banjo bolt [B] first, then the rear banjo bolt [C].

- Install the rear shift lever [D], aligning the lever slit [E] with the punch mark of the shaft.
- Tighten:

Torque - Rear Shift Lever Clamp Bolt: 9.8 N·m (1.0 kgf·m, 87 in·lb)

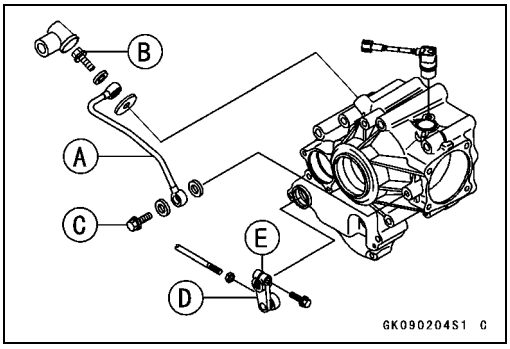

Downloaded from www.vulcanriders-sweden.org

Front Bevel Gears

Driven Gear Disassembly

● Holding the driven gear joint with the driven gear holder [A] in a vise, unscrew the driven gear bolt [B].

Special Tool - Driven Gear Holder, m2: 57001-1027

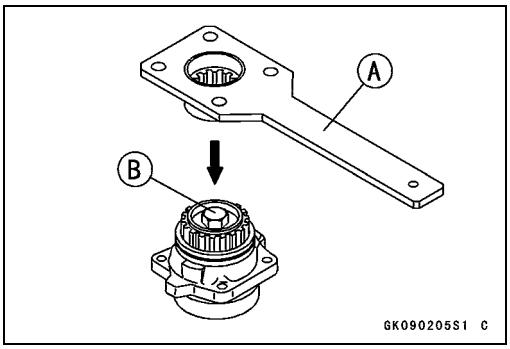

● Remove the driven gear joint [A] with the O-ring [B].
● Remove the driven gear from the bearing housing.
● Remove the oil seal from the housing with a hook, and pull the tapered roller bearing out of the housing.
● Remove the tapered roller bearing which is pressed onto the driven gear shaft with the bearing puller and adapter.

Special Tools - Bearing Puller: 57001-158
Bearing Puller Adapter: 57001-317

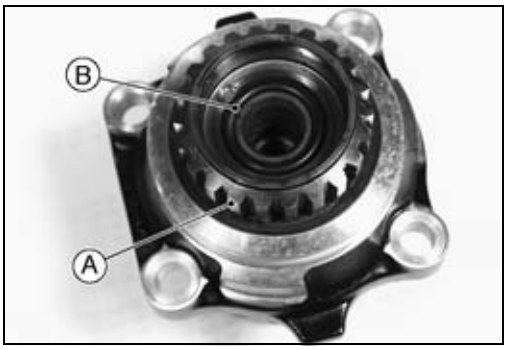

Driven Gear Assembly

● Replace the driven gear bolt with a new one.
○The drive and driven gears are lapped as a set at the factory to get the best tooth contact. They must be replaced as a set.
● Be sure to check and adjust the bearing preload, the bevel gear backlash, and tooth contact (see Front Bevel Gear Adjustment).
● Drive the tapered roller bearing inner race [B] onto the driven gear shaft [C] using the bearing driver [A].

Special Tool - Bearing Driver, ϕ32: 57001-382

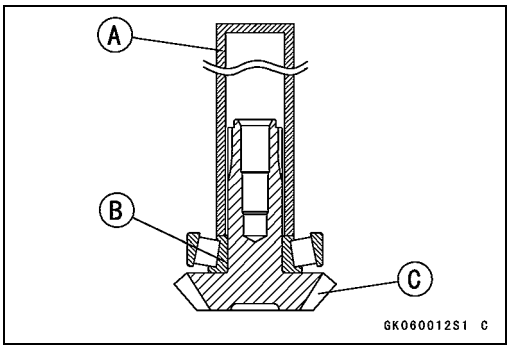

● After completing the bearing preload adjustment, reassemble the driven gear assy.
○Using the bearing driver set, press the oil seal in until the face of the seal is level with the end of the bearing housing hole.

Special Tool - Bearing Driver Set: 57001-1129

○Apply molybdenum disulfide oil to the threads and the seating surface of the driven gear bolt.
○Tighten the driven gear bolt to the specified torque.

Torque - Driven Gear Bolt: 120 N·m (12.0 kgf·m, 89 ft·lb)

○Stake [A] the driven gear bolt to prevent it from loosening.

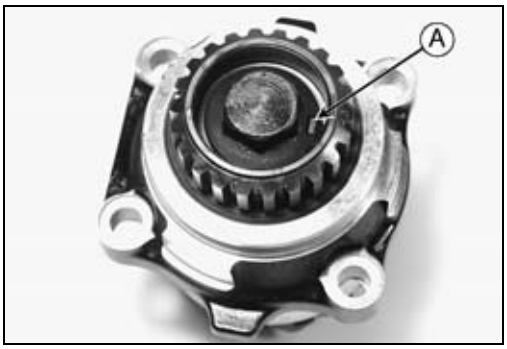

CAUTION

When staking the bolt, be careful not to apply shock to the driven gear and their bearings. Such a shock could damage the driven gear and/or bearings.

Downloaded from www.vulcanriders-sweden.org

Front Bevel Gears

Damper Cam Removal



- Remove the front gear case (see Front Gear Case Removal).
- Remove the retainer and needle bearing of the output shaft.
- Remove the clutch push rod guide [A] and bolts, and crankcase bearing upper retainer and bolts.
- Insert a bolt (ϕ12 mm, L 100 mm (3.94 in.)) [B] into the engine mounting bolt hole.
- Unscrew the damper cam nut [C] using the damper cam holder [D] (special tool) and deep socket wrench.

Special Tool - Damper Cam Holder: 57001-1025

Damper Cam Installation

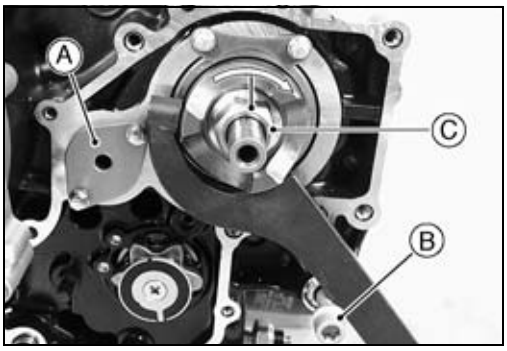

- Replace the damper cam nut with a new one.
- Remove the clutch push rod guide [A] and bolts, and crankcase bearing lower retainer and bolts.
- Insert the bolt (ϕ12 mm, L 100 mm (3.94 in.)) [B] into the engine mounting bolt hole.

○Apply molybdenum disulfide oil to the threads of the nut.

- Tighten the damper cam nut [C] to the specified torque.

Torque - Damper Cam Nut: 196 N·m (20.0 kgf·m, 145 ft·lb)

Special Tool - Damper Cam Holder: 57001-1025

Front Bevel Gear Adjustment

In order to prevent one gear from moving away from the other gear under load, the tapered roller bearings must be properly **preloaded**. Also the **backlash** (the distance one gear will move back and forth without moving the other gear) and **tooth contact pattern** of the bevel gears must be correct to prevent the gears from making noise and being damaged.

Above three adjustments are of critical importance and must be carried out in the correct sequence and method.

○Preload adjustment is necessary whenever the driven gear bolt [2] loosened, even if the purpose is not to replace the parts.

Downloaded from www.vulcanriders-sweden.org

Front Bevel Gears

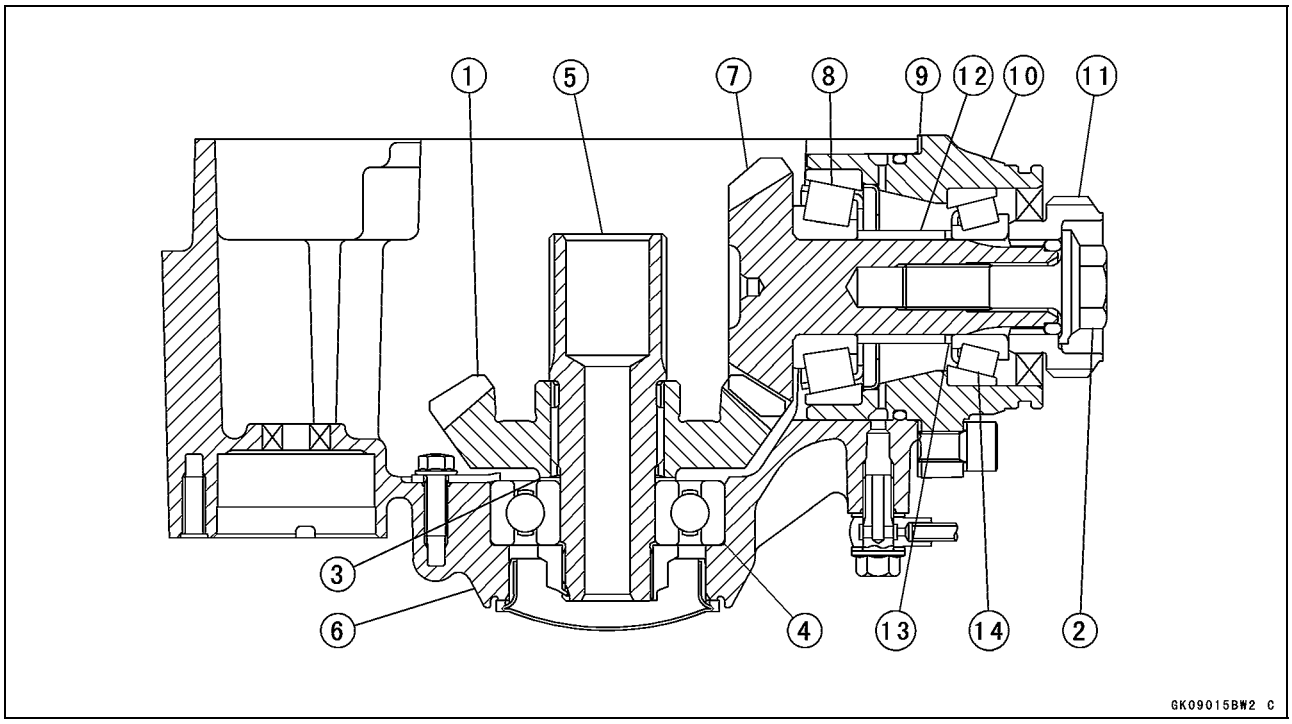

Backlash-related Parts

1. Drive Gear
2. Driven Gear Bolt
3. Drive Gear Shim(s)
4. Ball Bearing
5. Drive Gear Shaft
6. Front Gear Case
7. Driven Gear
8. Tapered Roller Bearing
9. Driven Gear Shim(s)
10. Driven Gear Bearing Housing
11. Driven Gear Joint

Preload-related Parts

12. Collar (Preload Adjustment)
13. Spacer (Preload Adjustment)
14. Tapered Roller Bearing

Front Bevel Gear Adjustment

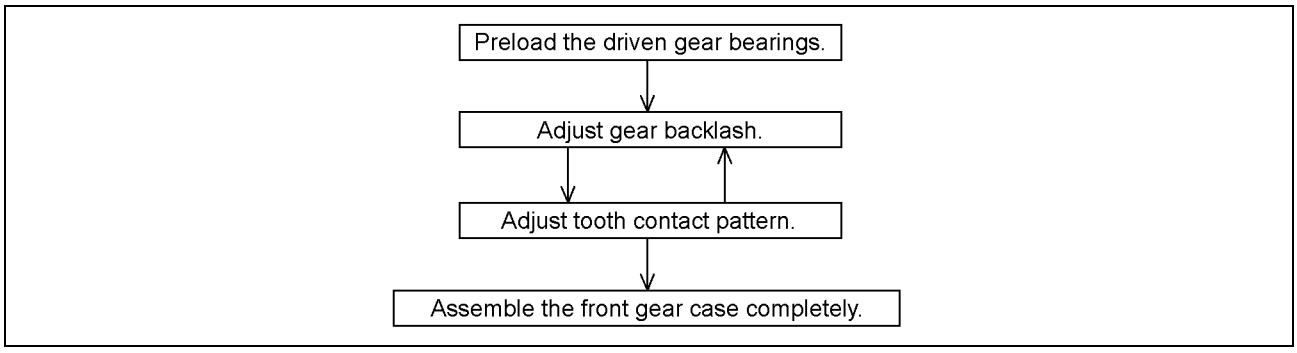

○When any of the backlash-related parts are replaced, or the driven gear bolt is loosened; even if the purpose is not to replace the parts, be sure to check and adjust the bearing preload, the bevel gear backlash, and tooth contact by replacing shims.

Downloaded from www.vulcanriders-sweden.org

Front Bevel Gears

Preload Adjustment

- Install the driven gear assy, and tighten the driven gear nut to the specified torque.

Torque - Driven Gear Bolt: 118 N·m (12.0 kgf·m, 87 ft·lb)

○Do not install the oil seal, and O-ring, and do not stake the bolt until the correct bearing preload is obtained.

CAUTION

To start with, choose a shim or collar so that the bearings are just SNUG with NO play and also with NO preload.
Any overpreload on the bearings could damage the bearings.

- Apply a little engine oil to the bearings, and turn the gear shaft more than 5 turns to allow the bearings to seat.
- Measure the bearing preload. Bearing preload is defined as a force or torque which is needed to start the gear shaft turning.

Preload for Driven Gear Bearing
Using Spring Scale: 3 ~ 4 N (0.3 ~ 0.5 kg, 0.6 ~ 1.0 lb)
Using Torque Wrench: 0.5 ~ 0.9 N·m (0.05 ~ 0.09 kgf·m, 4.3 ~ 7.8 in·lb)

NOTE

○*Preload can be measured either with a spring scale or a beam-type torque wrench. When measured with a spring scale, the preload is designated by force (N, kgf, lb), and when measured with a torque wrench, it is designated by torque (N·m, kgf·m, in·lb).*

Preload Measurement with Spring Scale

- Hold the bearing housing in a vise so that the gear shaft axis is vertical.
- Hook [C] the spring scale [B] on the driven gear holder [A] at a point 200 mm (7.9 in.) [D] apart from the center of the gear shaft.
- Apply force to the handle horizontally and at a right angle to it.

Special Tool - Driven Gear Holder, m2: 57001-1027

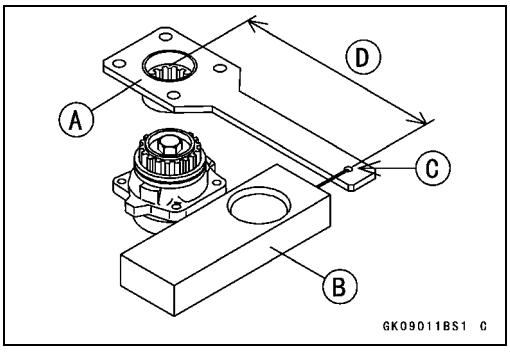

★If the preload is out of specified range, replace the bearing collar and/or spacer. To increase preload, decrease the stack length of the collar and spacer. To decrease preload, increase the stack length of the collar and spacer.
★Change the stack length a little at a time.

- Recheck the bearing preload, and readjust if necessary.

Downloaded from www.vulcanriders-sweden.org

Front Bevel Gears

Collars for Preload Adjustment

Length (mm)	Part Number
22.8	92027-1152
22.9	92027-1153
23.0	92027-1154
23.1	92027-1155
23.2	92027-1156
23.3	92027-1157
23.4	92027-1158
23.5	92027-1159
23.6	92027-1160
23.7	92027-1161
23.8	92027-1162
23.9	92027-1163
24.0	92027-1164
24.1	92027-1165

Spacers for Preload Adjustment

Thickness (mm)	Part Number
1.70	92025-1072
1.72	92025-1073
1.74	92025-1074
1.76	92025-1075
1.78	92025-1076
1.80	92025-1077

Bearing Preloading Mechanism

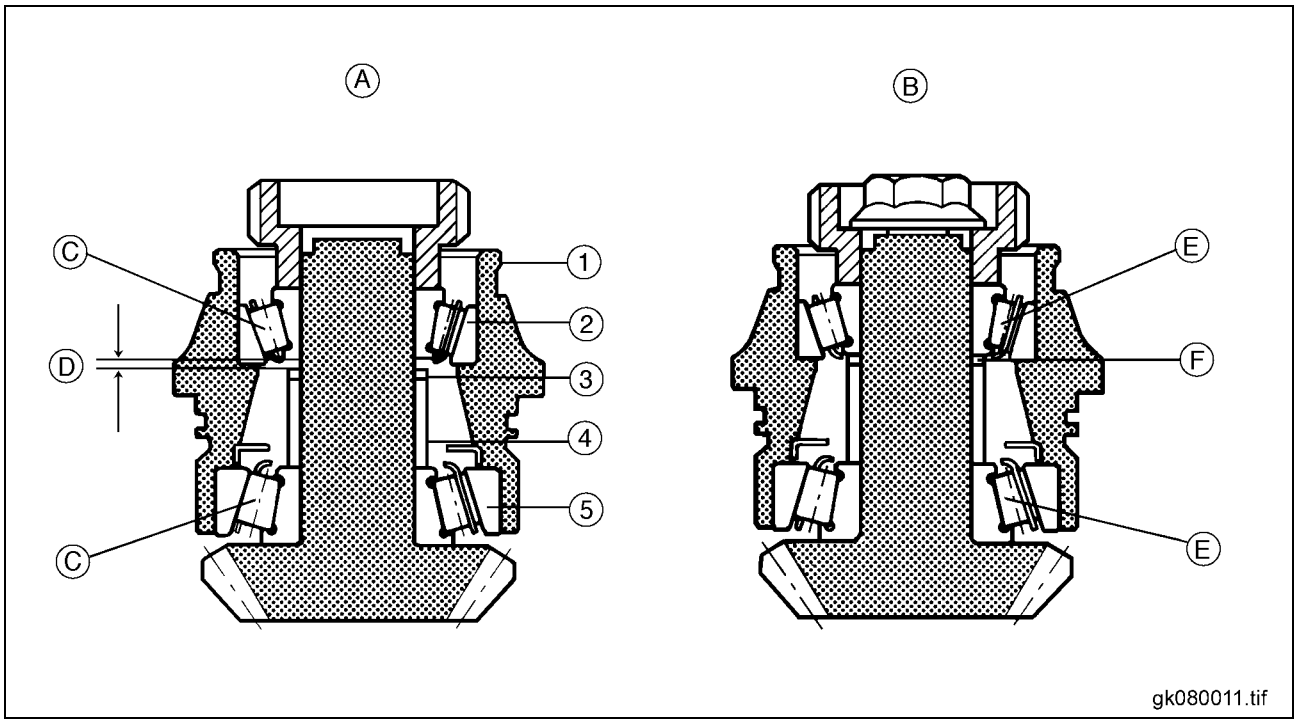

1. Bearing Housing
2. Tapered Roller Bearing
3. Spacer
4. Collar
5. Tapered Roller Bearing

Before Tightening [A]
After Tightening [B]
Under No Preload [C]
Initial Clearance [D]
Under Preload [E]
No Clearance [F]

Downloaded from www.vulcanriders-sweden.org

Front Bevel Gears

Backlash Adjustment

- Clean any dirt and oil off bevel gear teeth with a high-flash point solvent.
- Install the drive gear with the primary shim (1.0 mm (0.04 in.) thickness), and tighten the nut to the specified torque.

Torque - Drive Gear Nut: 265 N·m (27.0 kgf·m, 195 ft·lb)

NOTE

○*Do not stake the head of the nut until both backlash and tooth contact adjustments are finished.*

- Install the driven gear assy in the front gear case with the primary shim (1.0 mm (0.04 in.) thickness), and tighten the mounting bolts to the specified torque.

Torque - Driven Gear Assy Mounting Bolts: 25 N·m (2.5 kgf·m, 18 ft·lb)

○Check backlash during tightening of the mounting bolts, and stop tightening them immediately if the backlash disappears. Then, change the shim to a thicker one.

- Install a holder [A] with 6 mm bolts and nuts on the front gear case to mount a dial gauge.
- Set up a dial gauge against a drive gear tooth to check gear backlash. The gauge stem must be in line with the direction of tooth travel.
- To measure the backlash, move the drive gear back and forth [C] while holding [B] the driven gear steady with a tool. The difference between the highest and lowest gauge readings is the amount of backlash.

★If the backlash is not within the limit, replace the gear shim(s) at the drive and/or driven gear. To increase backlash, increase the thickness of the shim(s). To decrease backlash, decrease the thickness of the shim(s).

★Change the thickness a little at a time.

- Recheck the backlash, and readjust as necessary.

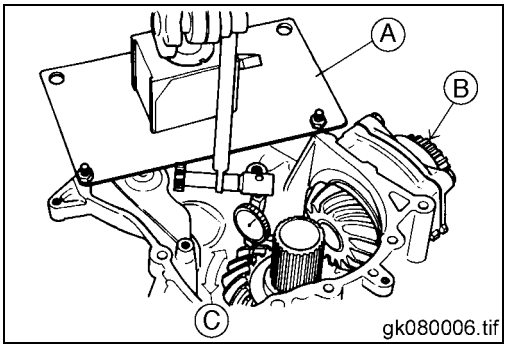

NOTE

○*It is OK to pack two shims. Do not pack three or more shims.*

Front Bevel Gear Backlash (at the gear tooth)
0.10 ~ 0.15 mm (0.0039 ~ 0.0059 in.)

Shims for Drive Gear

Thickness (mm)	Parts Number
0.15	92025-1688
0.5	92025-1689
0.6	92025-1690
0.7	92025-1691
0.8	92025-1692
0.9	92025-1693
1.0	92025-1694
1.1	92025-1695
1.2	92025-1696

Shims for Driven Gear

Thicknrss (mm)	Parts Number
0.1	92025-1826
0.15	92025-1818
0.5	92025-1819
0.6	92025-1820
0.7	92025-1821
0.8	92025-1822
0.9	92025-1823
1.0	92025-1824
1.2	92025-1825

Downloaded from www.vulcanriders-sweden.org

Front Bevel Gears

Tooth Contact Adjustment

- Clean any dirt and oil off the bevel gear teeth with a high -flash point solvent.
- Apply checking compound to 4 or 5 teeth on the driven gear.

NOTE

○*Apply checking compound to the teeth in a thin, even coat with a fairly stiff paint brush. If painted too thickly, the exact tooth pattern may not appear.*

○*The checking compound must be smooth and firm, with the consistency of tooth paste.*

○*Special compounds are available from automotive supply stores for the purpose of checking differential gear tooth patterns and contact. Use this for checking the bevel gears.*

- Turn the driven gear for 3 or 4 revolutions in the drive and reverse (coast) directions, while creating a drag on the drive gear.
- Check the drive pattern and coast pattern of the bevel gear teeth. The tooth contact patterns of both drive and coast sides should be centrally located between the top and bottom of the tooth, and little closer to the toe of the tooth.

★If the tooth contact pattern is incorrect, replace the shim(s) at the driven gear and shim(s) at the driven gear, following the examples shown. Then erase the tooth contact patterns, and check them again. Also check the backlash every time the shims are replaced. Repeat the shim change procedure as necessary.

NOTE

○*If the backlash goes out of standard range after changing shims, correct the backlash before checking the tooth contact pattern.*

○*It is OK to pack two shims. Do not pack three or more shims.*

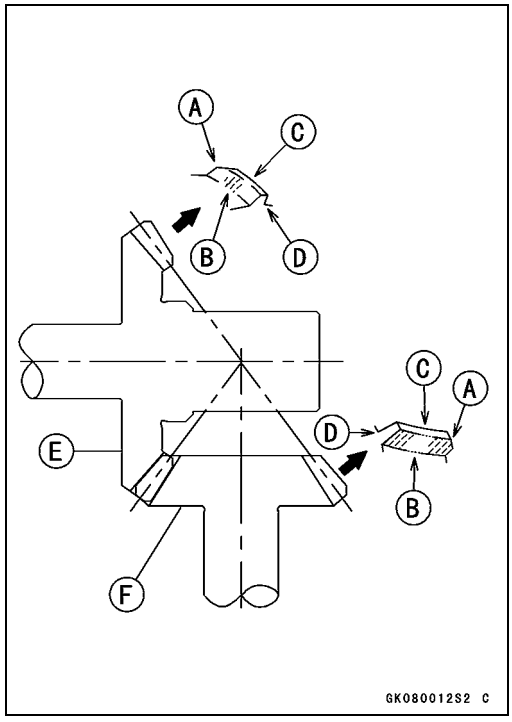

Heel [A]
Bottom [B]
Top [C]
Toe [D]
Drive Gear [E]
Driven Gear [F]

Downloaded from www.vulcanriders-sweden.org

Front Bevel Gears

Incorrect Tooth Contact Patterns (Example 1)

- Increase the thickness of the drive gear shim(s) by 0.05 mm, and/or increase the thickness of the driven gear shim(s) by 0.05 mm to correct the pattern shown below. Repeat in 0.05 mm steps if necessary.
  Heel [A]
  Bottom [B]
  Top [C]
  Toe [D]
  Drive Gear [E]
  Driven Gear [F]

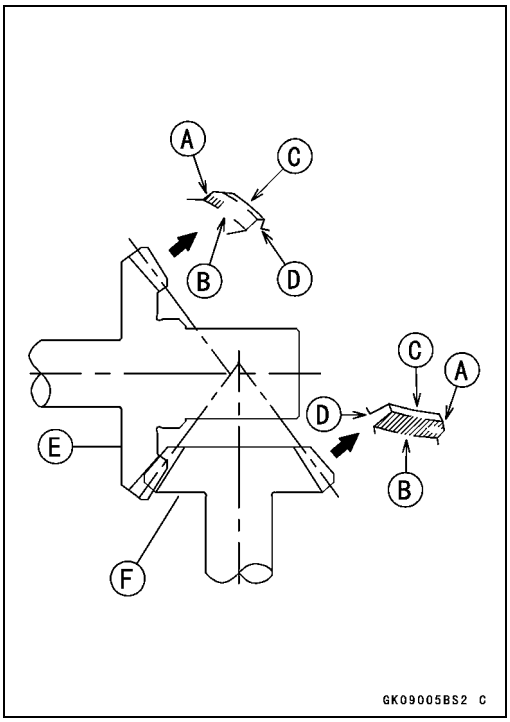

Incorrect Tooth Contact Patterns (Example 2)

- Decrease the thickness of the drive gear shim(s) by 0.05 mm, and/or decrease the thickness of the driven gear shim(s) by 0.05 mm to correct the pattern shown below. Repeat in 0.05 mm steps if necessary.
  Heel [A]
  Bottom [B]
  Top [C]
  Toe [D]
  Drive Gear [E]
  Driven Gear [F]

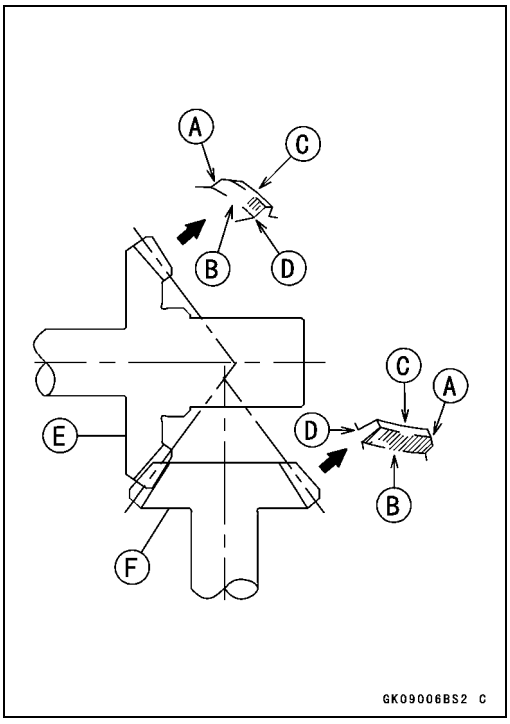

Bevel Gear Inspection

- Visually check the bevel gears for scoring, chipping, or other damage.

★Replace the bevel gears as a set if either gear is damaged.

Downloaded from www.vulcanriders-sweden.org

Front Bevel Gears

Cam Damper Inspection

- Visually inspect the spring [A], cam follower [B], damper cam [C], and output shaft [D].

★Replace the damaged parts.

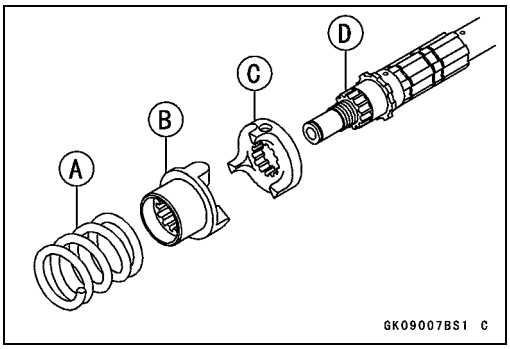

Downloaded from www.vulcanriders-sweden.org

Bearing and Oil Seal

Ball or Needle Bearing Replacement

- Using the bearing driver set or the oil seal & bearing remover (special tool), remove the bearings.

Special Tools - Oil Seal & Bearing Remover: 57001-1058
Bearing Driver Set: 57001-1129

NOTE

○*In the absence of the above mentioned tools, satisfactory results may be obtained by heating the case to approximately 93°C (200°F) max., and tapping the bearing in or out.*

CAUTION

Do not heat the case with a blowtorch. This will warp the case. Soak the case in oil and heat the oil.

VN1500-N1 ~ N3

- Remove the pinion gear needle bearing [A] in the final gear case as follows:

○First drill the spring pin [B] using a 3.5 mm drill bit [C], second a 3.8 mm.
22 mm (0.87 in.) [D]
○Using a hook, remove the residue of the spring pin.
○Remove the pinion gear needle bearing.

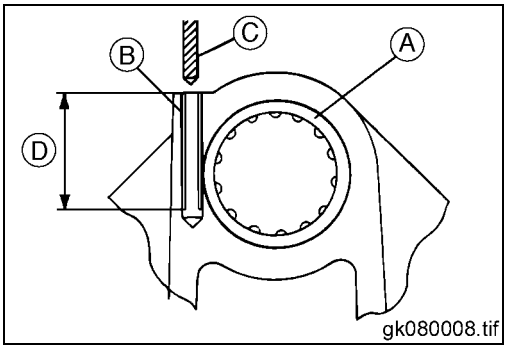

VN1500-N1 ~ N3, N4 ~

- Install a new needle bearing [A] with the marked side facing out until it stops at the bottom of the case, using the bearing driver set [B].

Special Tool - Bearing Driver Set: 57001-1129

○Insert a new spring pin (VN1500-N1 ~ N3)

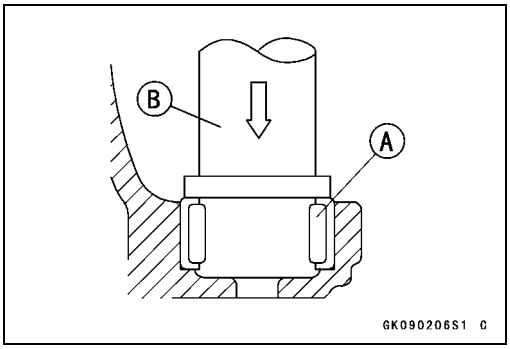

- Using a press and the bearing driver set [A], install a new ball bearing until it stops at the bottom of the case.

Special Tool - Bearing Driver Set: 57001-1129

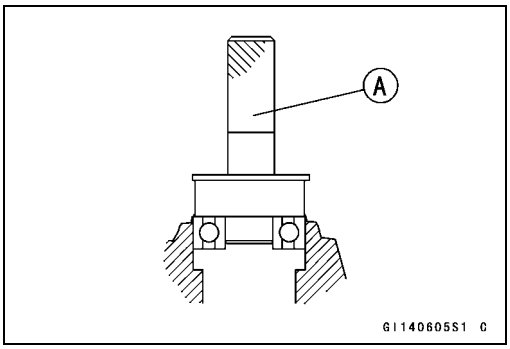

Downloaded from www.vulcanriders-sweden.org

Bearing and Oil Seal

Ball Bearing Wear

CAUTION
Do not remove the ball bearings for inspection. Removal may damage them.

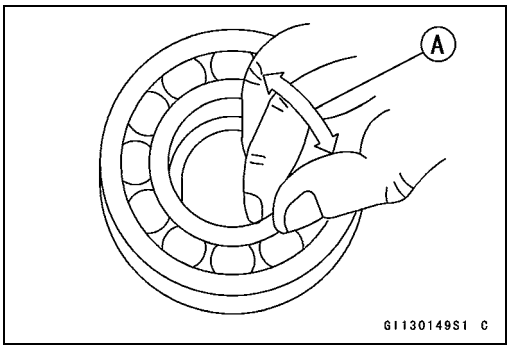

- Check the ball bearings.

○Since the ball bearings are made to extremely close tolerances, the wear must be judged by feel rather than measurement. Clean each bearing in a high-flash point solvent, dry it (do not spin the bearing while it is dry), and oil it with engine oil.

○Spin [A] the bearing by hand to check its condition.

★If the bearing is noisy, does not spin smoothly, or has any rough spots, replace it.

Tapered Roller Bearing Inspection

CAUTION
Do not remove the tapered roller bearings for inspection. Removal may damage them.

- Visually inspect the bearing in the front gear case for abrasion, color change, or other damage.

★If there is any doubt as to the condition of the bearing, replace it.

Needle Bearing Inspection

CAUTION
Do not remove the needle bearings in the final gear case for inspection. Removal may damage them.

- Check the needle bearings in the front and final gear cases.

○The rollers in the needle bearing normally wear very little, and wear is difficult to measure. Instead of measuring, inspect the bearing for abrasion, color change, or other damage.

★If there is any doubt as to the condition of a needle bearing, replace it.

Oil Seal Inspection

- Inspect the oil seals.

★Replace it if the lips are misshapen, discolored (indicating that the rubber has deteriorated), hardened or otherwise damaged.

Downloaded from www.vulcanriders-sweden.org

Downloaded from www.vulcanriders-sweden.org

Brakes

Table of Contents

Exploded View 11-2
Specifications 11-4
Brake Lever, Brake Pedal 11-5
  Brake Lever Position Adjustment 11-5
  Brake Pedal Position Adjustment 11-5
  Brake Pedal Removal 11-6
  Brake Pedal Installation 11-7
Calipers 11-8
  Front Caliper Removal 11-8
  Rear Caliper Removal 11-8
  Caliper Installation 11-8
  Caliper Disassembly 11-9
  Caliper Assembly 11-9
  Caliper Piston and Cylinder Damage 11-10
  Caliper Dust Seal/Fluid Seal Damage 11-10
  Rubber Boot/Caliper Holder Shaft Wear 11-11
Brake Pads 11-12
  Front Brake Pad Removal 11-12
  Rear Brake Pad Removal 11-12
  Installation 11-12
  Brake Pad Wear Inspection 11-13
Master Cylinder 11-14
  Front Master Cylinder Removal 11-14
  Front Master Cylinder Installation 11-14
  Rear Master Cylinder Removal/Installation 11-15
  Front Master Cylinder Disassembly 11-15
  Rear Master Cylinder Disassembly 11-15
  Master Cylinder Assembly 11-16
  Master Cylinder Inspection 11-17
Brake Discs 11-18
  Brake Disc Removal 11-18
  Brake Disc Installation 11-18
  Brake Disc Wear 11-18
  Brake Disc Warp 11-18
Brake Fluid 11-19
  Level Inspection 11-19
  Brake Fluid Change 11-20
  Brake Line Bleeding 11-21
Brake Hoses 11-23
  Brake Hose Removal/Installation 11-23
  Brake Hose Inspection 11-23

Downloaded from www.vulcanriders-sweden.org

Exploded View

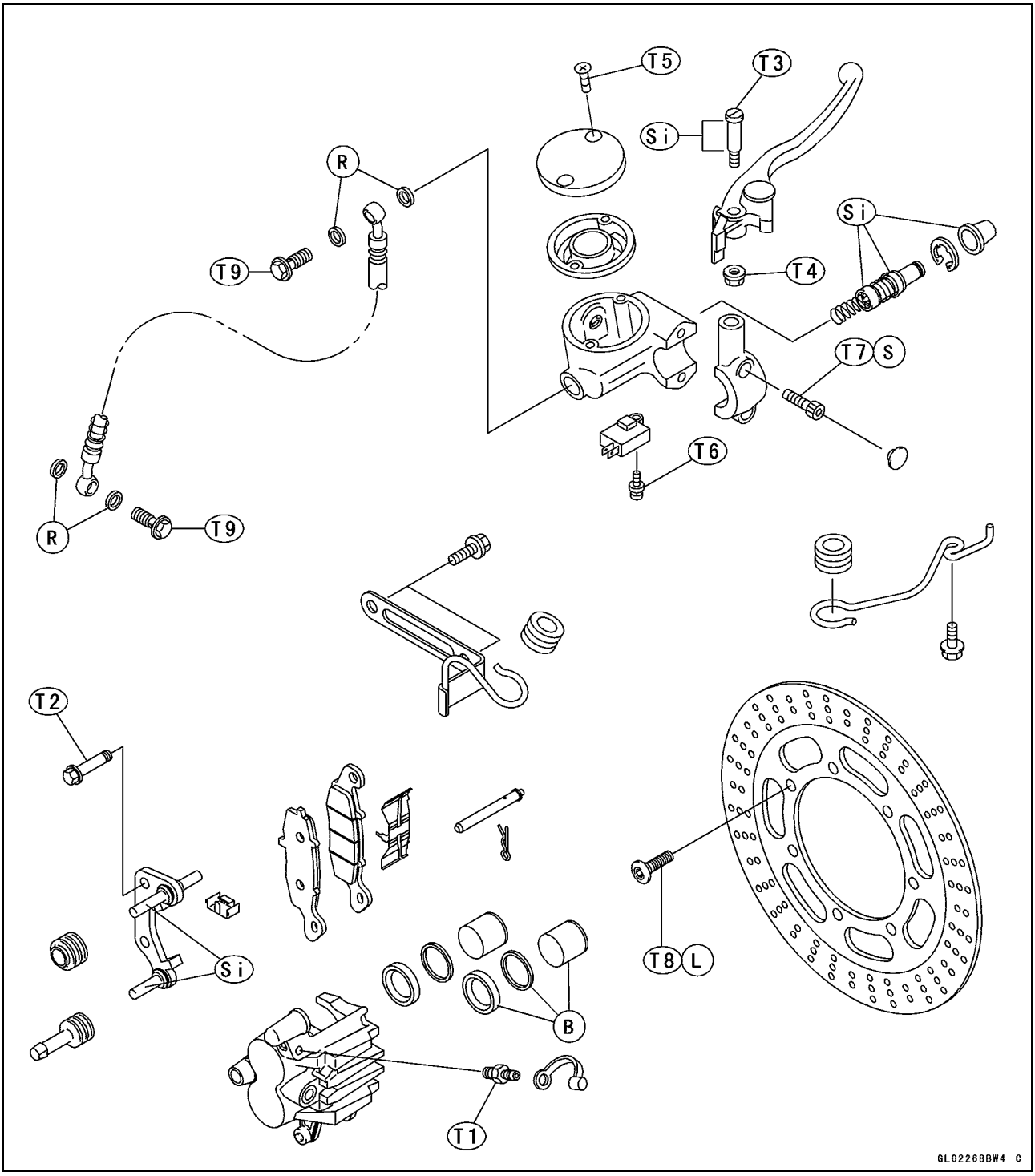

T1: 7.8 N·m (0.80 kgf·m, 69 in·lb)
T2: 34 N·m (3.5 kgf·m, 25 ft·lb)
T3: 1.0 N·m (0.10 kgf·m, 9 in·lb)
T4: 5.9 N·m (0.60 kgf·m, 52 in·lb)
T5: 1.5 N·m (0.15 kgf·m, 13 in·lb)
T6: 1.2 N·m (0.12 kgf·m, 10 in·lb)
T7: 8.8 N·m (0.90 kgf·m, 78 in·lb)
T8: 27 N·m (2.8 kgf·m, 20 ft·lb)
T9: 25 N·m (2.5 kgf·m, 18 ft·lb)
B: Apply brake fluid.
G: Apply grease.
L: Apply a non-permanent locking agent.
R: Replacement Parts
S: Follow the specific tightening sequence.
Si: Apply silicone grease or PBC (Poly Butyl Cuprysil) grease.

Downloaded from www.vulcanriders-sweden.org

Exploded View

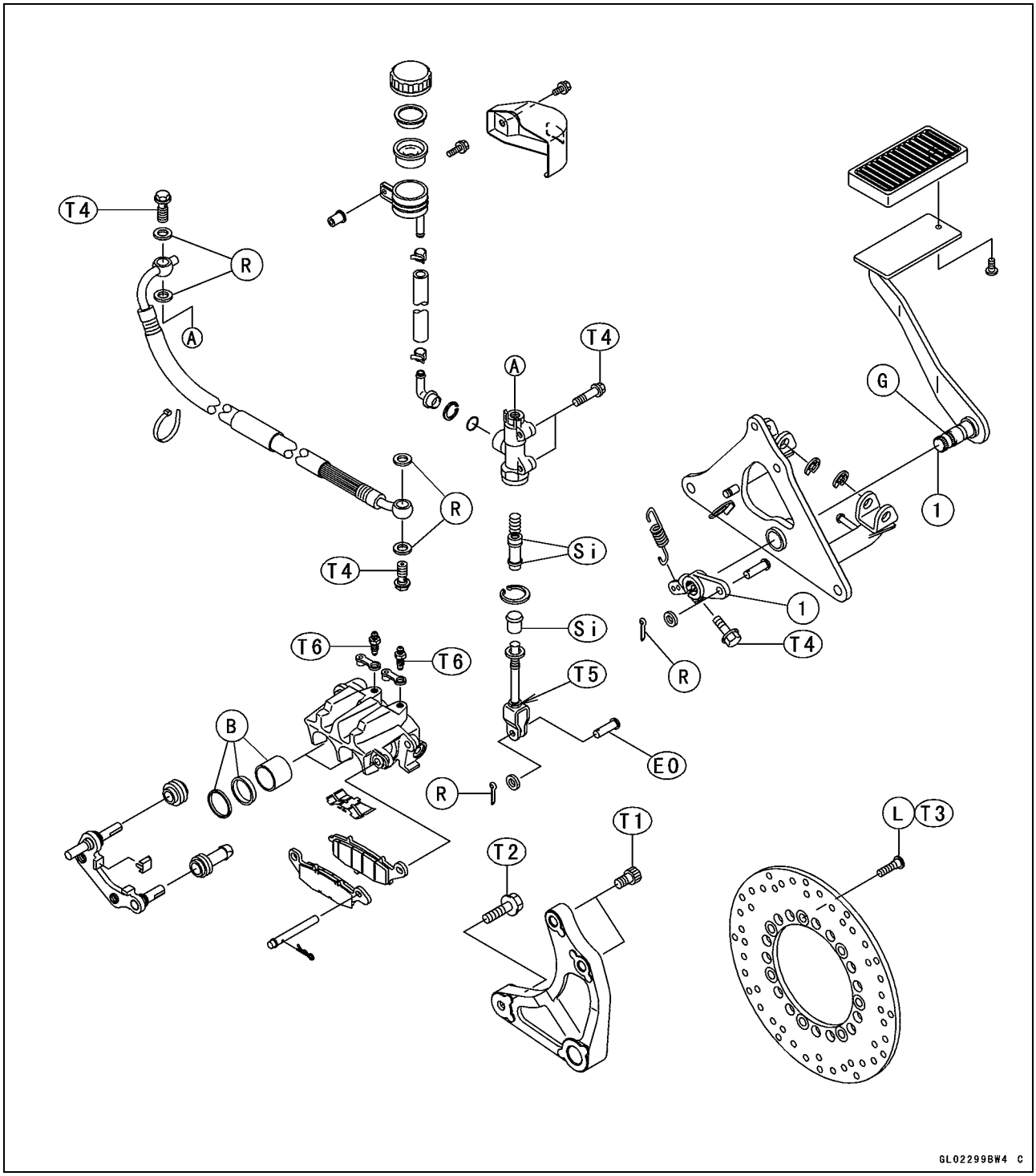

1. Align the marks.
T1: 34 N·m (3.5 kgf·m, 25 ft·lb)
T2: 64 N·m (6.5 kgf·m, 47 ft·lb)
T3: 27 N·m (2.8 kgf·m, 20 ft·lb)
T4: 25 N·m (2.5 kgf·m, 18 ft·lb)
T5: 18 N·m (1.8 kgf·m, 13 ft·lb)
T6: 7.8 N·m (0.80 kgf·m, 69 in·lb)
B: Apply brake fluid.
EO: Apply engine oil.
G: Apply grease.
L: Apply a non-permanent locking agent.
R: Replacement Parts
Si: Apply silicone grease or PBC (Poly Butyl Cuprysil) grease.

Downloaded from www.vulcanriders-sweden.org

Specifications

Item	Standard	Service Limit
Brake Lever, Brake Pedal		
Brake Lever Position	No.1	5-way adjustable
Brake Lever Free Play	Non-adjustable	– – –
Pedal Free Play	Non-adjustable	– – –
Pedal Position	About 95 mm (3.74 in.) (height from pedal tip to footboard top)	– – –
Brake Fluid		
Grade	DOT4 (provided when shipping)	– – –
Brake Pads		
Pad Lining Thickness:		
Front	4.5 mm (0.18 in.) (Inner Side) and 4.7 mm (0.19 in.) (Piston Side)	1 mm (0.04 in.)
Rear	4.9 mm (0.19 in.)	1 mm (0.04 in.)
	7.5 mm (0.30 in.) (VN1500-N2 ~, N6F/T6F)	1 mm (0.04 in.)
	7.0 mm (0.28 in.) (VN1500N7F ~)	1 mm (0.04 in.)
Brake Discs		
Thickness:		
Front	5.8 ~ 6.2 mm (0.228 ~ 0.244 in.)	5.5 mm (0.217 in.)
Rear	6.8 ~ 7.2 mm (0.268 ~ 0.283 in.)	6.0 mm (0.236 in.)
Runout	TIR 0.15 mm (0.006 in.) or less	TIR 0.3 mm (0.012 in.)

Special Tools - Inside Circlip Pliers: 57001-143
Jack: 57001-1238
Attachment Jack: 57001-1398

Downloaded from www.vulcanriders-sweden.org

Brake Lever, Brake Pedal

Brake Lever Position Adjustment

The brake lever adjuster has 5 positions so that the brake lever position can be adjusted to suit the operator's hand.

- Push the lever forward and turn the adjuster [A] to align the number with the arrow mark [B] on the lever holder (right side view).

○The distance from the grip to the lever is minimum at number 5 and maximum at number 1.

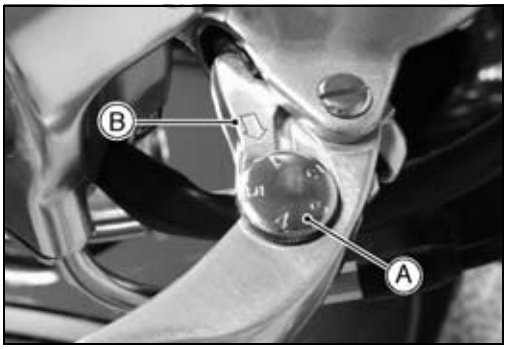

Brake Pedal Position Adjustment

- Check that the brake pedal [A] is in the correct position.

Pedal Position

Standard: About 95 mm (3.74 in.) [B] (height from pedal tip to footboard top [C])

NOTE

○*Usually it's not necessary to adjust the pedal position, but always adjust it when push rod locknut has been loosened.*

○*If the push rod length cannot be adjusted by turning the clevis, the brake pedal may be deformed or incorrectly installed.*

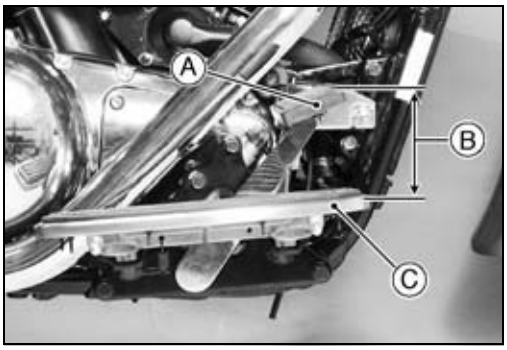

- Remove the fuel tank (see Fuel System chapter) and disconnect the rear brake light switch connector [A] (upper connector).
- Cut the straps [B] to free the rear brake light switch leads.

Front [C]

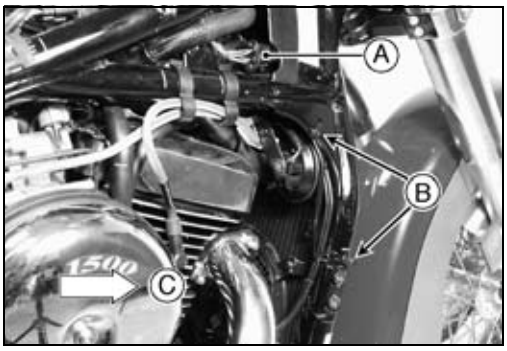

- Remove the brake fluid reservoir cover and take off the brake fluid reservoir [A].



Downloaded from www.vulcanriders-sweden.org

Brake Lever, Brake Pedal

- Remove the right front footboard bracket bolts [A] and turn over the footboard [B].

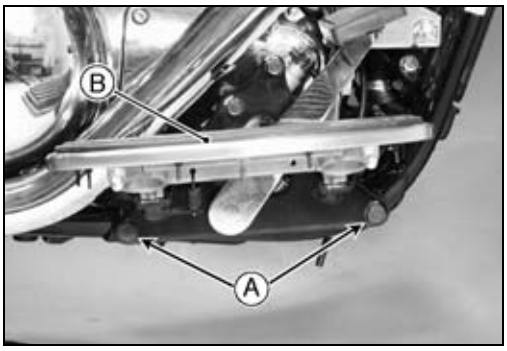

- Loosen the locknut [A] and turn the push rod with the hex head [B] to achieve the correct pedal position.

★If the length [C] shown is **8 ±1 mm (0.315 ±0.039 in.)**, the pedal position will be within the standard range.

- Tighten:

Torque - Rear Master Cylinder Push Rod Locknut: 18 N·m (1.8 kgf·m, 13 ft·lb)

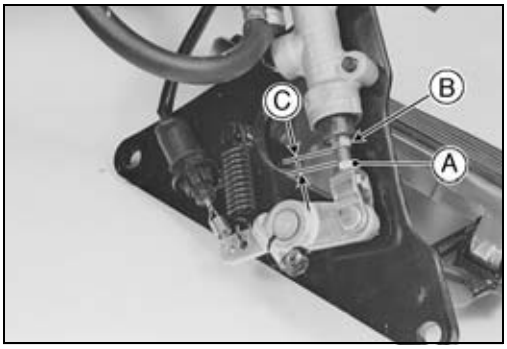

Brake Pedal Removal

- Loosen the brake pedal clamp bolt [A] (front view).
- Loosen the rear master cylinder mounting bolts.
- Remove the right front footboard bracket bolts, and turn over the footboard (see Brake Pedal Position Adjustment).



- Remove:
  Brake Pedal Return Spring [A]
  Rear Brake Light Switch Return Spring [B]
- Unscrew the brake pedal clamp bolt [C].

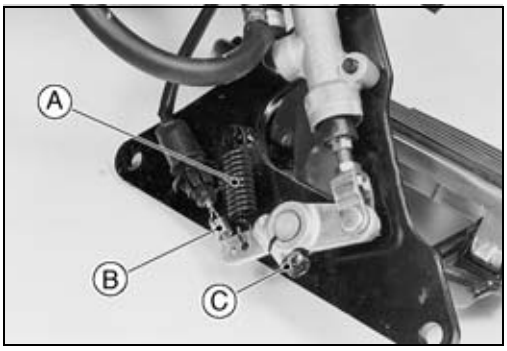

- Remove the cotter pin [A], and the joint pin [B].
- Unscrew the bolts [C], and remove the rear master cylinder [D].

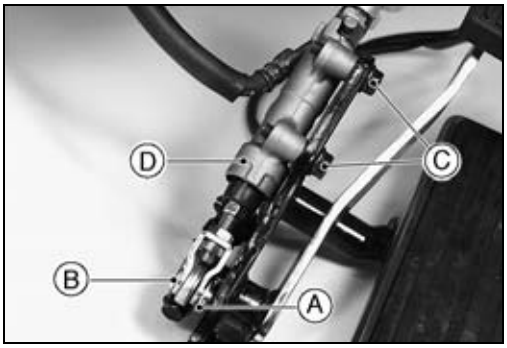

Downloaded from www.vulcanriders-sweden.org

Brake Lever, Brake Pedal

- Detach the front footboard [A], and pull off the brake pedal [B].

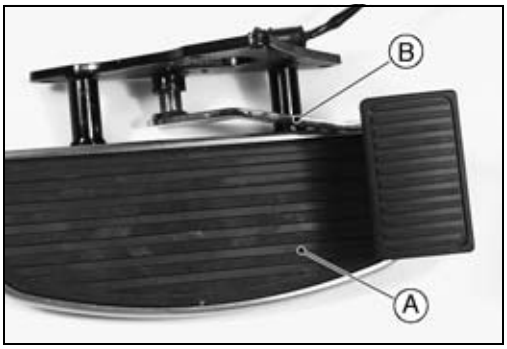

Brake Pedal Installation

- Apply grease to the brake pedal shaft.
- Install the pedal shaft [A] so that the punched mark on the shaft is aligned [B] with the punched mark on the brake lever [C].
- Install:
  Brake Pedal Return Spring
  Rear Brake Light Switch Return Spring
- Tighten:

Torque - Front Footboard Bracket Bolts: 34 N·m (3.5 kgf·m, 25 ft·lb)
Brake Pedal Clamp Bolt: 25 N·m (2.5 kgf·m, 18 ft·lb)
Rear Master Cylinder Mounting Bolts: 25 N·m (2.5 kgf·m, 18 ft·lb)

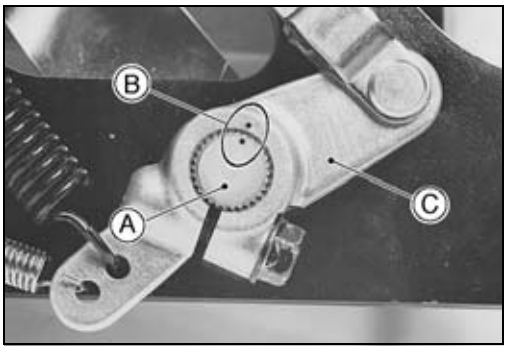

- Replenish the fluid in the reservoir, and bleed the brake line (see Brake Line Bleeding).
- Check the brake for proper braking power, no brake drag, and no fluid leakage.

⚠ WARNING

Do not attempt to ride the motorcycle until a full brake pedal is obtained by pumping the brake pedal until the pads are against the disc. The brake will not function on the first application of the pedal if this is not done.

- Check the brake pedal position and adjust it if necessary.
- Check the rear brake light switch operation and adjust the switch if necessary (see Electrical System chapter).

Downloaded from www.vulcanriders-sweden.org

Calipers

Front Caliper Removal

- Loosen the banjo bolt [A] at the brake hose lower end, and tighten it loosely.
- Unscrew the caliper mounting bolts [B].
  Front [C]

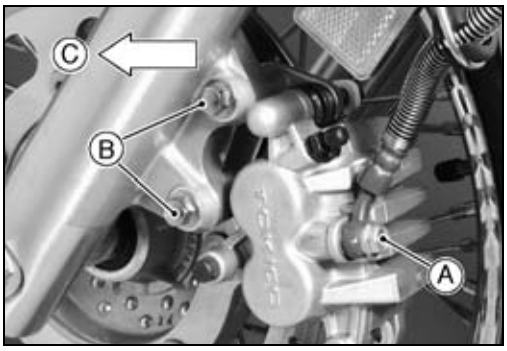

- Twist [A] the caliper outboard to clear the disc, and then take off the caliper.
- Unscrew the banjo bolt [B] and remove the brake hose [C] from the caliper.

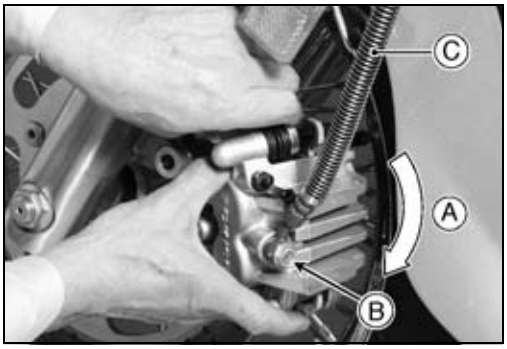

CAUTION

Immediately wash away any brake fluid that spills.

NOTE

○*If the caliper is to be disassembled after removal and if compressed air is not available, remove the pistons before the brake hose is removed (see Caliper Disassembly).*

Rear Caliper Removal

- Remove the rear caliper [A] in the same way as the front caliper.
  Caliper Mounting Bolts [B]
  Brake Hose [C]

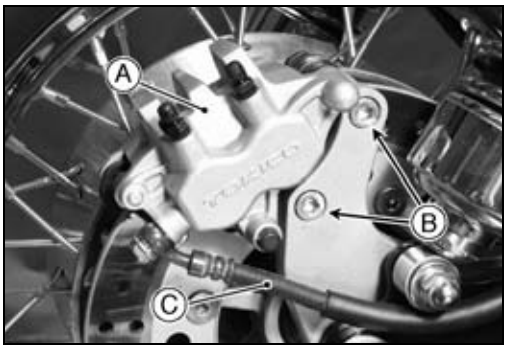

Caliper Installation

- Install the caliper and brake hose lower end.

○Replace the washer on each side of hose fitting with new ones.

- Tighten the caliper mounting bolts and banjo bolt.

Torque - Front Caliper Mounting Bolts: 34 N·m (3.5 kgf·m, 25 ft·lb)
Rear Caliper Mounting Bolts: 34 N·m (3.5 kgf·m, 25 ft·lb)
Brake Hose Banjo Bolt: 25 N·m (2.5 kgf·m, 18 ft·lb)

- Check the fluid level in the brake reservoirs.
- Bleed the brake line (see Brake Line Bleeding).
- Check the brake for good braking power, no brake drag, and no fluid leakage.

⚠ WARNING

Do not attempt to ride the motorcycle until a full brake lever or pedal is obtained by pumping the brake lever or pedal until the pads are against the disc. The brakes will not function on the first application of the lever or pedal if this is not done.

Downloaded from www.vulcanriders-sweden.org

Calipers

Caliper Disassembly

NOTE

○*The procedure to disassemble the front caliper is as follows. The rear caliper disassembly is the same as for the front caliper.*

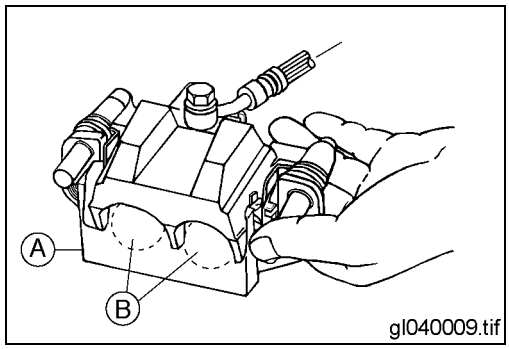

- Remove the caliper (see Caliper Removal) with the hose installed.
- Remove the pads and spring (see Pad Removal).
- Insert a wooden board [A] 6 mm (0.24 in.) thick inside the caliper opening.
- Pump the brake lever (or pedal) until the pistons [B] push the wooden board.

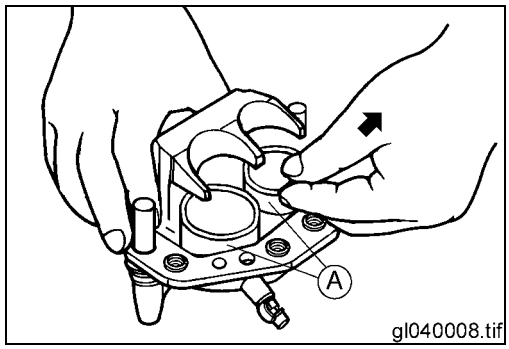

- Remove the board and pull out the pistons [A] by hand.

○These pistons can also be removed by disconnecting the hose and applying compressed air to the hose joint opening using the same wooden board. But be carefull not to put your fingers or palm inside the caliper opening during work.

⚠ WARNING

To avoid serious injury, never place your fingers or palm inside the caliper opening. If you apply compressed air into the caliper, the pistons may crush your hand or fingers.

CAUTION

Immediately wash away any brake fluid that spills.

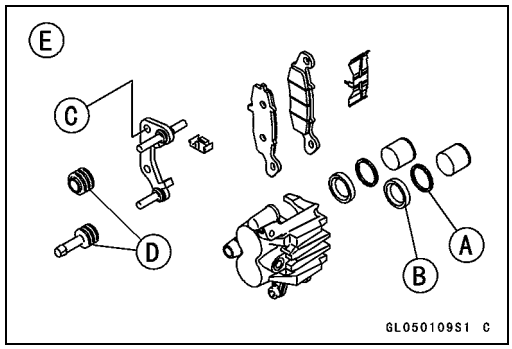

- Remove the dust seals [A] and fluid seals [B].
- Remove the caliper holder [C], and shaft rubber friction boots [D].
- Remove the bleed valve and rubber cap.

Front Caliper [E]

Caliper Assembly

- Tighten the bleed valve.

Torque - Caliper Bleed Valve: 7.8 N·m (0.80 kgf·m, 69 in·lb)

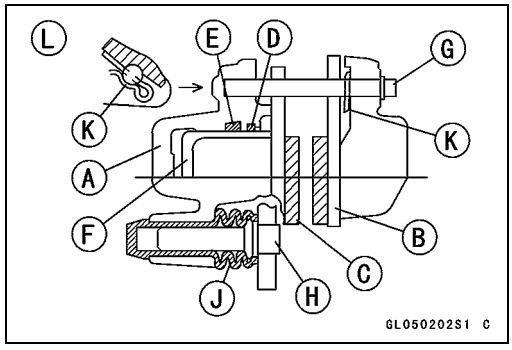

○It is recommended that the fluid seal (piston seal) which is removed, be replaced with a new one.

- Replace the dust seals if they are damaged.
- Install the fluid seal. Either side of the seal may face outboard.
- Apply brake fluid to the cylinders, pistons, and fluid seals (piston seals), and push the pistons into the cylinders by hand. Take care that neither the cylinder nor the piston skirt gets scratched.

Front Caliper [L]
Rear Caliper [M]

Downloaded from www.vulcanriders-sweden.org

Calipers

Caliper Body [A]
Outer Pad [B]
Inner Pad [C]
Dust Seal [D]
Fluid Seal [E]
Piston [F]
Pad Pin [G]
Caliper Holder Shafts [H]
Rubber Boot [J]
Snap Pin [K]

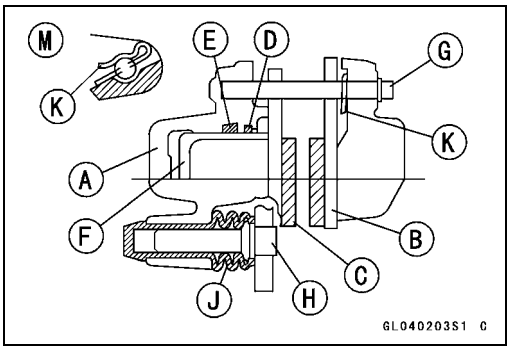

- Replace the rubber boots if they are damaged.
- Apply a thin coat of silicone or PBC grease to the caliper holder shafts and holder holes (Silicone or PBC grease is a special high temperature, water-resistance grease).
- Install the anti-rattle spring in the caliper as shown.
- Install the pads (see Brake Pad Installation).

Anti-rattle Spring for Front Caliper [A]

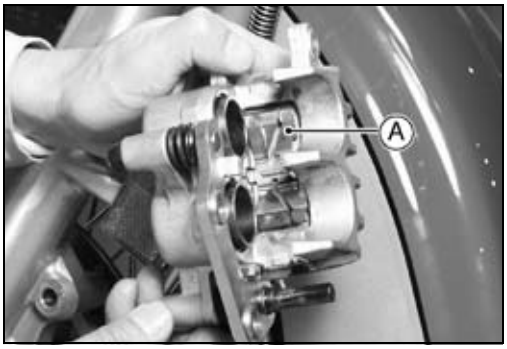

Anti-rattle Spring for Rear Caliper [A]

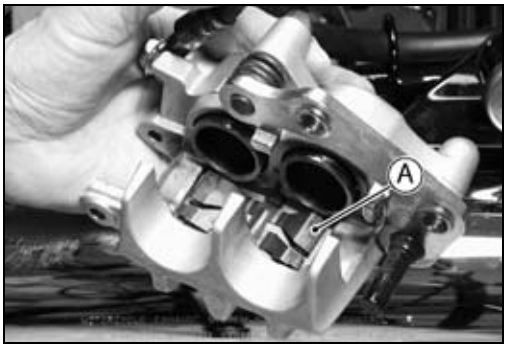

Caliper Piston and Cylinder Damage

Front Caliper [A]
Rear Caliper [B]

- Visually inspect the piston [C] and cylinder surfaces.

★Replace the caliper if the cylinder and piston are badly scores or rusty.

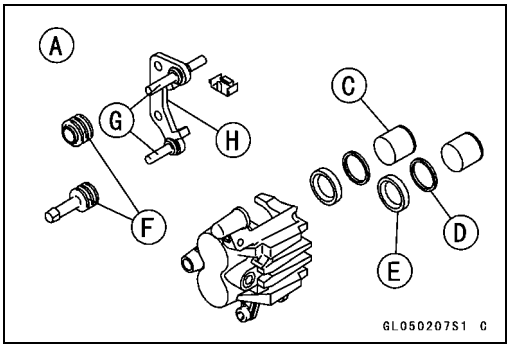

Caliper Dust Seal/Fluid Seal Damage

- Check that the dust seals [D] are not cracked, worn, swollen, or otherwise damaged.

★If they show any damage, replace them.

○The fluid seal [E] around the piston maintains the proper pad/disc clearance. If the seals are not satisfactory, pad wear will increase, and constant pad drag on the disc will raise brake and brake fluid temperature.

- Replace the fluid seals under any of the following conditions: (a) fluid leakage around the pad; (b) brakes overheat; (c) there is a large difference in inner and outer pad wear; (d) the seal is stuck to the piston.

★If the fluid seal is replaced, replace the dust seal as well. Also, replace all seals every other time the pads are changed.

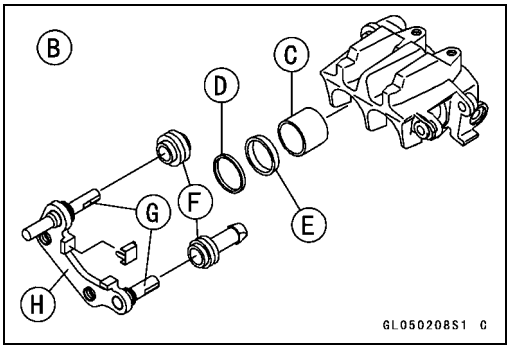

Downloaded from www.vulcanriders-sweden.org

Calipers

Rubber Boot/Caliper Holder Shaft Wear

- Check that the rubber boots [F] are not cracked, worn, swollen, or otherwise damaged.

★If they show any damage, remove the caliper holder and replace the boots.

○The caliper body must slide smoothly on the caliper holder shafts [G] of the caliper holder [H]. If the body does not slide smoothly, one pad will wear more than the other, pad wear will increase, and constant drag on the disc will raise brake and brake fluid temperature.

- Check to see that the caliper holder shafts are not badly worn or stepped, and that the rubber boots are not damaged.

★If the rubber boot is damaged, replace the rubber boot. To replace the rubber boot, remove the pads and the caliper holder.

★If the caliper holder shaft is damaged, replace the caliper holder.

Downloaded from www.vulcanriders-sweden.org

Brake Pads

Front Brake Pad Removal

- Remove the caliper with the hose installed (see Front Caliper Removal).
- Remove:
  Snap Pin [A]
  Pad Pin [B]

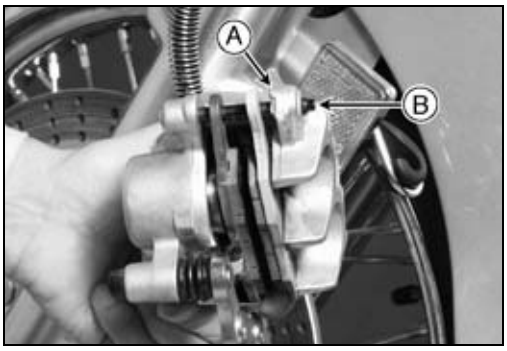

- Remove the jaw side pad [A], and then remove the piston side pad [B].
  Jaw [C]

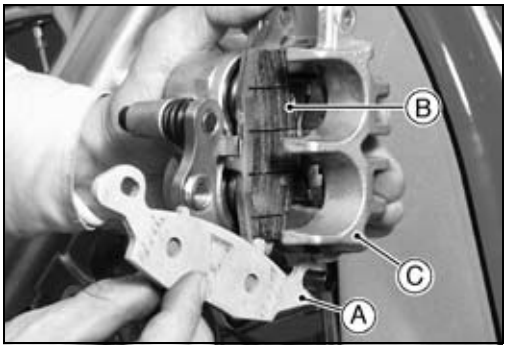

Rear Brake Pad Removal

- Remove the caliper with the hose installed (see Rear Caliper Removal).
- Remove the snap pin [A] and pad pin [B].
- Take off the piston side pad [C], and then jaw side pad [D] from the caliper holder shaft [E].
  Jaw [F]

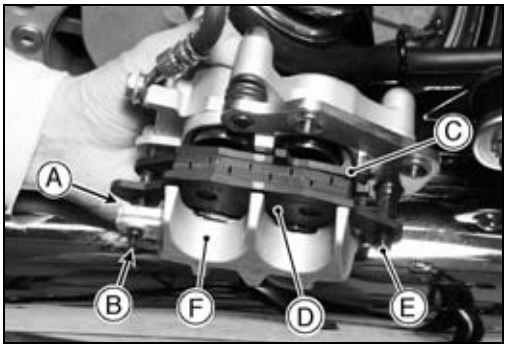

Installation

- Before installation, clean the pads with a high-flash point solvent.
- Push [A] the caliper pistons in by hand as far as they will go.
- Be careful not to mix up the jaw side pad [B] and the piston side pad [C] (The front caliper is shown here.).
- Be sure to install the snap pin.

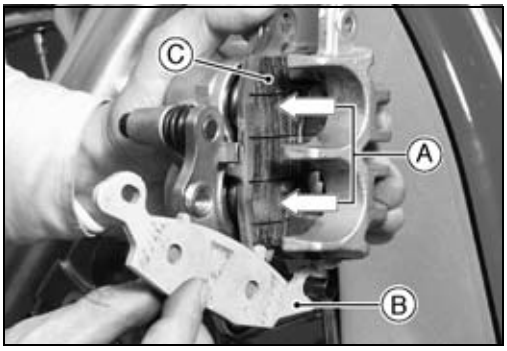

⚠ WARNING

Do not attempt to ride the motorcycle until a full brake lever or pedal is obtained by pumping the brake lever or pedal until the pads are against the disc. The brakes will not function on the first application of the lever or pedal if this is not done.

Downloaded from www.vulcanriders-sweden.org

Brake Pads

Brake Pad Wear Inspection

In accordance with the Periodic Maintenance Chart, inspect the brake pads for wear.

- Remove the pads.
  Jaw (Inner) Side Pad [A]
  Piston Side Pad [B]
- Check the lining thickness [C] of the pads in each caliper.

★If the lining thickness of either pad is less than the service limit [D], replace both pads in the caliper as a set.

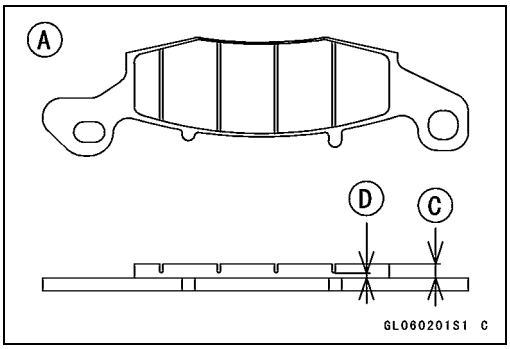

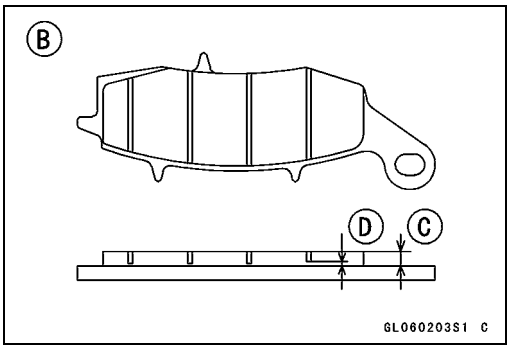

Pad Lining Thickness

Standard:

Front	**4.5 mm (0.18 in.) (Inner Side) and 4.7 mm (0.19 in.) (Piston Side)**
Rear	**4.9 mm (0.19 in.)**
	7.5 mm (0.30 in.) (VN1500-N2 ~, N6F/T6F)
	7.0 mm (0.28 in.) (VN1500N7F ~)
Service Limit:	**1 mm (0.04 in.)**

Downloaded from www.vulcanriders-sweden.org

Master Cylinder

Front Master Cylinder Removal

- Disconnect the front brake light switch connectors [A] (front view).
- Draw out the brake fluid from the reservoir with a means like the fork oil level gauge.



- Remove the banjo bolt [A] to disconnect the brake hose from the master cylinder (see Brake Hose Removal/Installation).
- Unscrew the clamp bolts [B], and take off the master cylinder [C] as an assembly with the reservoir, brake lever, and brake switch installed.

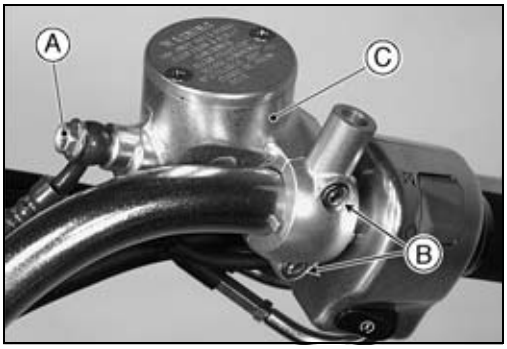

CAUTION
Immediately wash away any brake fluid that spills.

Front Master Cylinder Installation

- Set the front master cylinder [A] to match its mating surface [B] to the punched mark [C] on the handlebar (rear view).

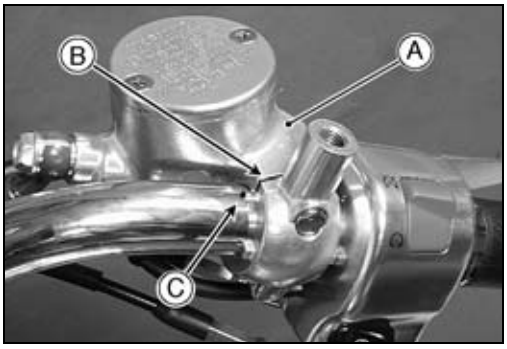

○The master cylinder clamp must be installed with the rear view mirror boss [A] faced upward.

- Tighten the upper clamp bolt first, and then the lower clamp bolt. There will be a gap at the lower part of the clamp after tightening.

Torque - Front Master Cylinder Clamp Bolts: 8.8 N·m (0.90 kgf·m, 78 in·lb)

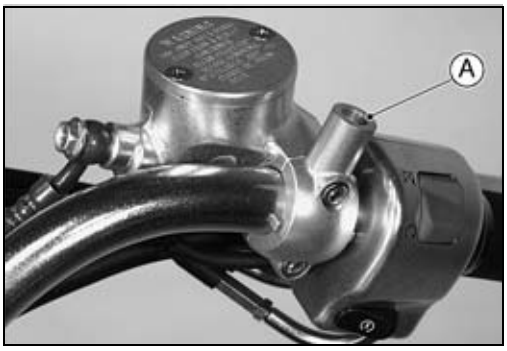

- Use a new flat washer on each side of the brake hose fitting.
- Tighten the brake hose banjo bolt.

Torque - Brake Hose Banjo Bolt: 25 N·m (2.5 kgf·m, 18 ft·lb)

- Replenish the fluid in the reservoir, and bleed the brake line (see Brake Line Bleeding).
- Check the brake for good braking power, no brake drag, and no fluid leakage.

Downloaded from www.vulcanriders-sweden.org

Master Cylinder

Rear Master Cylinder Removal/Installation

○The rear master cylinder is removed or installed during brake pedal removal or installation (see Brake Pedal Removal or Installation).

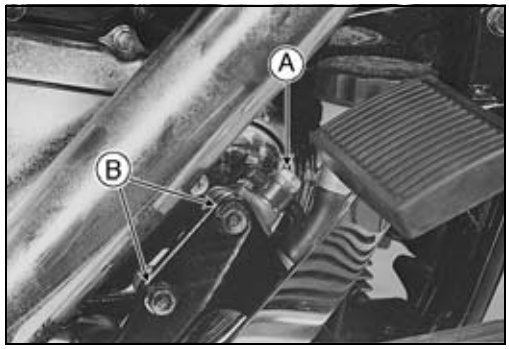

NOTE

○*Before removing the right front footboard, loosen the rear master cylinder banjo bolt [A] and mounting bolts [B].*

⚠ WARNING

Do not attempt to ride the motorcycle until a full brake pedal is obtained by pumping the brake pedal until the pads are against the disc. The brake will not function on the first application of the pedal if this is not done.

Front Master Cylinder Disassembly

- Remove the front master cylinder.
- Remove the reservoir cap and diaphragm.
- Unscrew the locknut and pivot bolt, and remove the brake lever.
- Pull the dust cover [A] out of place, and remove the circlip [B].

Special Tool - Inside Circlip Pliers: 57001-143

- Pull out the piston assy [C], primary cup [D], and return spring [E].

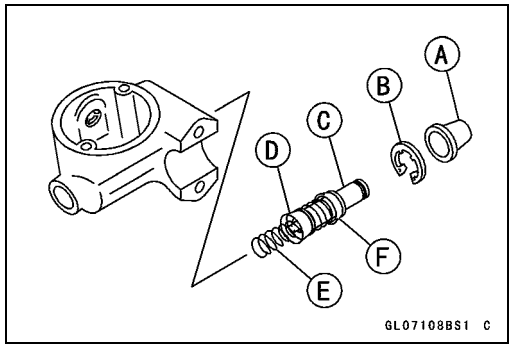

CAUTION

Do not remove the secondary cup from the piston since removal will damage it.

Rear Master Cylinder Disassembly

NOTE

○*Do not remove the push rod clevis [A] for master cylinder disassembly since removal requires brake pedal position adjustment.*

- Remove the rear master cylinder (see Rear Master Cylinder Removal).
- Slide the dust cover on the push rod out of place, and remove the circlip.

Special Tool - Inside Circlip Pliers: 57001-143

- Pull out the push rod with the piston stop.
- Take off the piston assy [B], primary cup [C], and return spring [D].

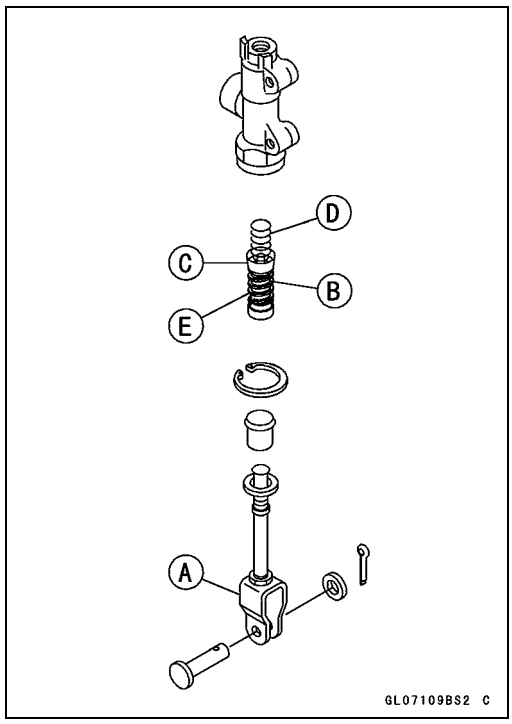

CAUTION

Do not remove the secondary cup from [E] the piston since removal will damage it.

Downloaded from www.vulcanriders-sweden.org

Master Cylinder

Master Cylinder Assembly

- Before assembly, clean all parts including the master cylinder with brake fluid or alcohol.

CAUTION

Except for the disc pads and disc, use only disc brake fluid, isopropyl alcohol, or ethyl alcohol for cleaning brake parts. Do not use any other fluid for cleaning these parts. Gasoline, engine oil, or any other petroleum distillate will cause deterioration of the rubber parts. Oil spilled on any part will be difficult to wash off completely, and will eventually deteriorate the rubber used in the disc brake.

- Apply brake fluid to the removed parts and to the inner wall of the cylinder.
- Take care not to scratch the piston or the inner wall of the cylinder.
- Apply:

Silicone Grease- Brake Lever Pivot Bolt
Brake Lever Pivot Contact
Push Rod Contact (Rear)
Dust Cover

- Tighten the brake lever pivot bolt and the locknut.

Torque - Brake Lever Pivot Bolt: 1.0 N·m (0.10 kgf·m, 9 in·lb)
Brake Lever Pivot Bolt Locknut: 5.9 N·m (0.60 kgf·m, 52 in·lb)

Downloaded from www.vulcanriders-sweden.org

Master Cylinder

Master Cylinder Inspection

- Disassemble the front and rear master cylinders.
- Check that there are no scratches, rust or pitting on the inner wall [A] of each master cylinder and on the outside of each piston [B].

★If the cylinder or piston shows any damage, replace them.

- Inspect the primary cup [C] and secondary cup [D].

★If a cup is worn, damaged softened (rotted), or swollen, the piston assy should be replaced to renew the cups.

★If fluid leakage is noted at the brake lever, the piston assy should be replaced to renew the cups.

Front Master Cylinder [J]

- Check the dust covers [E] for damage.

★If they are damaged, replace them.

- Check the piston return spring [F] for any damage.

★If the springs are damaged, replace them.

- Check that relief port [G] and supply port [H] are not plugged.

★If the relief port becomes plugged, the brake pads will drag on the disc. Blow the ports clean with compressed air.

Rear Master Cylinder [K]

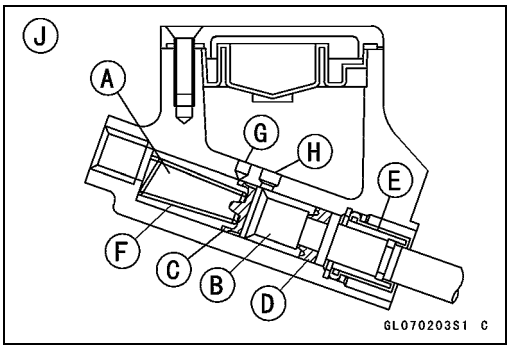

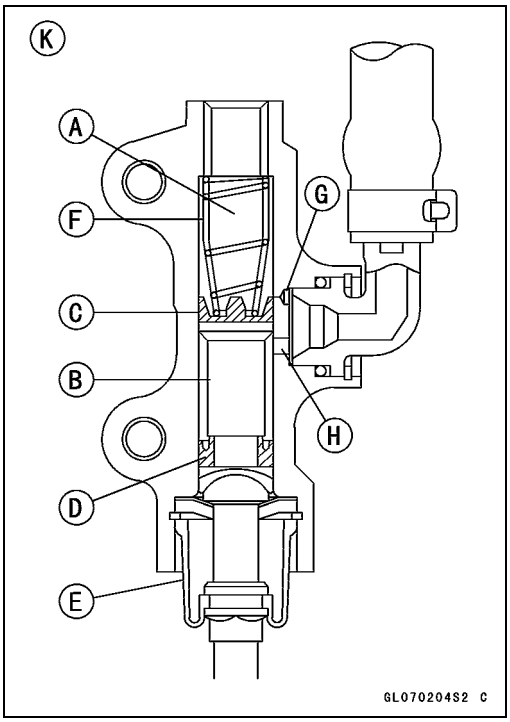

Downloaded from www.vulcanriders-sweden.org

Brake Discs

Brake Disc Removal

- Remove the wheel (see Wheels/Tires chapter).
- Unscrew the mounting bolts, and take off the disc.

Brake Disc Installation

- Install the brake disc [A] on the wheel so that the marked side [B] faces out.
- Apply a non-permanent locking agent to the threads of the brake disc bolts [C].
- Tighten:

Torque - Brake Disc Bolts: 27 N·m (2.8 kgf·m, 20 ft·lb)

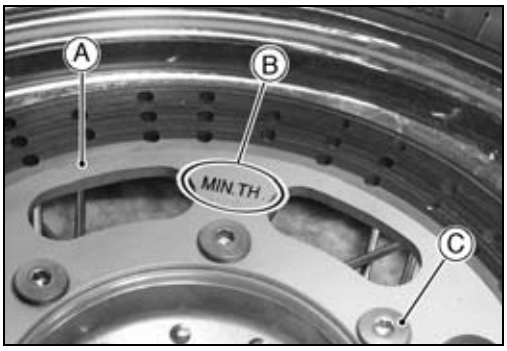

Brake Disc Wear

★Replace the disc if the sliding surface [A] has worn past the service limit.

Front Disc Thickness
Standard: 5.8 ~ 6.2 mm (0.228 ~ 0.244 in.)
Service Limit: 5.5 mm (0.217 in.)

Rear Disk Thickness
Standard: 6.8 ~ 7.2 mm (0.268 ~ 0.283 in.)
Service Limit: 6.0 mm (0.236 in.)



Brake Disc Warp

- Jack up the motorcycle so that the wheel is off the ground (see Wheels/Tires chapter).

○For front disc inspection, turn the handlebar fully to one side.

- Set up a dial gauge against the disc [A] as shown and measure disc runout, while turning [B] the wheel by hand.

★If the runout exceeds the service limit, replace the disc.

Disc Runout
Standard: TIR 0.15 mm (0.006 in.) or less
Service Limit: TIR 0.3 mm (0.012 in.)



Downloaded from www.vulcanriders-sweden.org

Brake Fluid

Level Inspection

○In accordance with the Periodic Maintenance Chart, inspect the brake fluid level in the front and rear brake fluid reservoirs.

● Check that the brake fluid level in the front brake reservoir [A] is between the upper [B] and the lower [C] level lines.

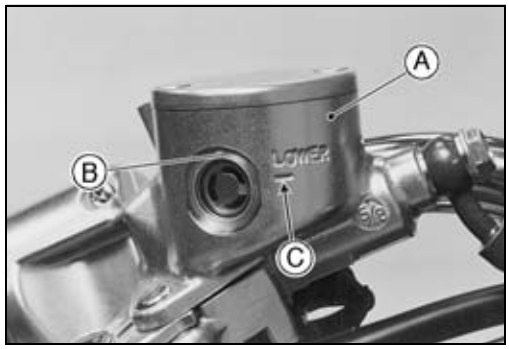

NOTE

○*Hold the reservoir horizontal by turning the handlebar when checking brake fluid level.*

★If the fluid level is lower than the lower level line, fill the reservoir to the upper level line.

● Check that the brake fluid level in the rear brake reservoir [A] is between the upper [B] and the lower [C] level lines.

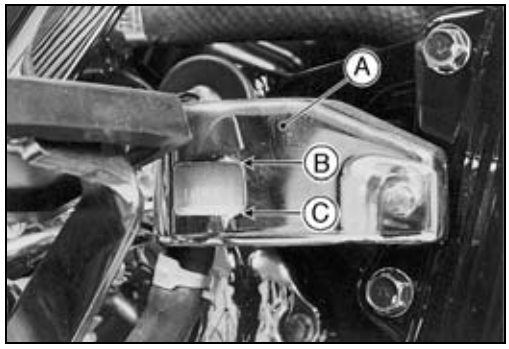

★If the fluid level is lower than the lower level line, fill the reservoir to the upper level line.

○Use extra heavy-duty brake fluid only from a container marked DOT4.

○Brake fluid of DOT4 is installed in the brake system when shipped.

Torque - Front Brake Reservoir Cap Screws: 1.5 N·m (0.15 kgf·m, 13 in·lb)

● Follow the procedure below to install the rear brake fluid reservoir cap correctly.

○First, tighten the rear brake fluid reservoir cap [B] clockwise [C] by hand until slight resistance is felt indicating that the cap is seated on the reservoir body, then tighten the cap an additional 1/6 turn [D] while holding the brake fluid reservoir body [A].

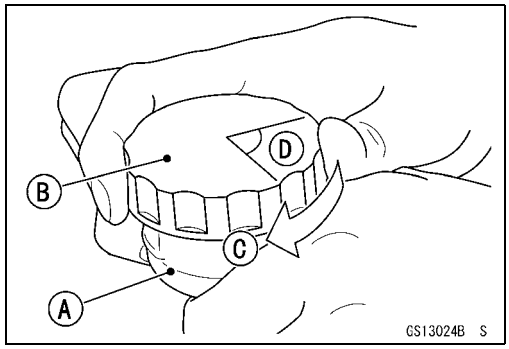

⚠ WARNING

Do not mix two brands of fluid. Change the brake fluid in the brake line completely if the brake fluid must be refilled but the type and brand of the brake fluid that is already in the reservoir are unidentified. After changing the fluid, use only the same type and brand of fluid thereafter.

Downloaded from www.vulcanriders-sweden.org

Brake Fluid

Brake Fluid Change

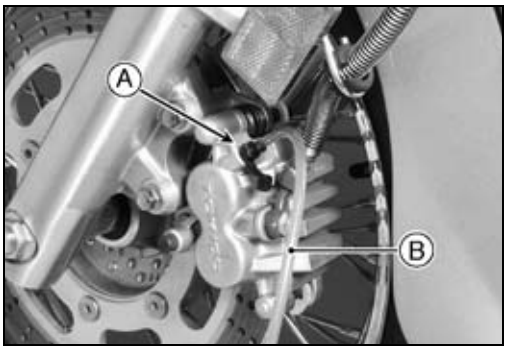

NOTE

○*The procedure to change the front brake fluid is as follows. Changing the rear brake fluid is almost the same as for the front brake.*

- Level the brake fluid reservoir.
- Remove the reservoir cap.
- Remove the rubber cap from the bleed valve [A] on the caliper.
- Attach a clear plastic hose [B] to the bleed valve, and run the other end of the hose into a container.
- Fill the reservoir with new brake fluid.
- Temporarily install the reservoir cap.
- Change the brake fluid as follows:

NOTE

○*The fluid level must be checked often during the changing operation and replenished with fresh brake fluid. If the fluid in the reservoir runs out any time during the changing operation, the brakes will need to be bled since air will have entered the brake line.*

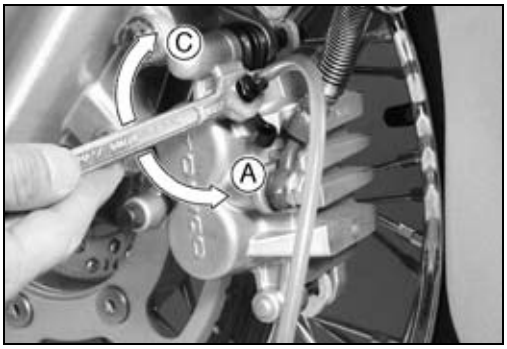

○Repeat this operation until fresh brake fluid comes out from the plastic hose or the color of the fluid changes.
Open the bleed valve [A].
Pump the brake lever and hold it [B].
Close the bleed valve [C].
Release the brake lever [D].

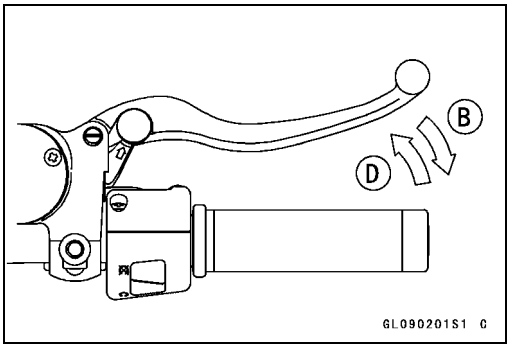

- Remove the clear plastic hose.
- Install the reservoir cap.
- Tighten the bleed valve, and install the rubber cap.

Torque - Caliper Bleed Valve: 7.8 N·m (0.80 kgf·m, 69 in·lb)
Front Brake Reservoir Cap Screws: 1.5 N·m (0.15 kgf·m, 13 in·lb)

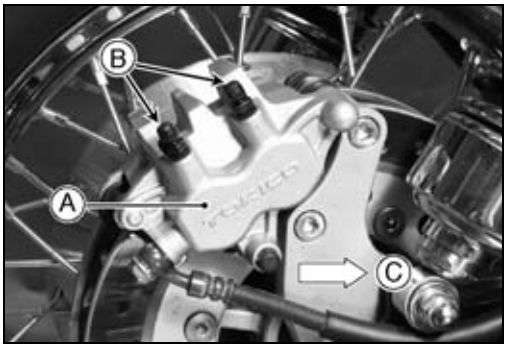

○For the rear caliper [A], change the blake fluid for the two bleed valves [B].
Front [C]

- After changing the fluid, check the brake for good braking power, no brake drag, and no fluid leakage.

★If necessary, bleed the air from the brake lines (see next section).

Downloaded from www.vulcanriders-sweden.org

Brake Fluid

Brake Line Bleeding

The brake fluid has a very low compression coefficient so that almost all the movement of the brake lever or pedal is transmitted directly to the caliper for braking action. Air, however, is easily compressed. When air enters the brake lines, brake lever or pedal movement will be partially used in compressing the air. This will make the lever or pedal feel spongy, and there will be a loss in braking power.

⚠ WARNING

Be sure to bleed the air from the brake line whenever brake lever or pedal action feels soft or spongy after the brake fluid is changed, or whenever a brake line fitting has been loosened for any reason.

NOTE

○*The procedure to bleed the front brake line is as follows. Bleeding the rear brake line is almost the same as for the front brake.*

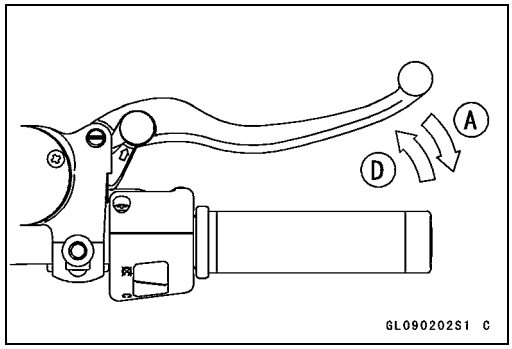

- Remove the reservoir cap, and fill the reservoir with fresh brake fluid to the upper level line in the reservoir.
- With the reservoir cap off, slowly pump the brake lever several times until no air bubbles can be seen rising up through the fluid from the holes at the bottom of the reservoir.
- Install the reservoir cap.

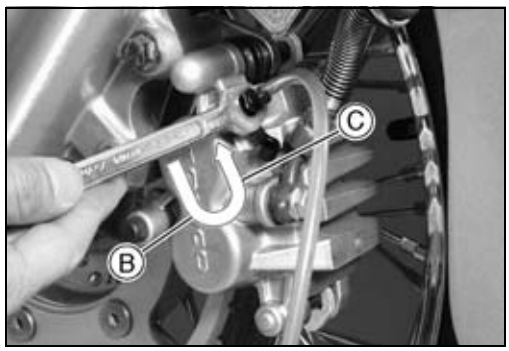

- Remove the rubber cap from the bleed valve on the caliper.
- Attach a clear plastic hose to the bleed valve, and run the other end of the hose into a container.
- Bleed the brake line and the caliper as follows:

○Repeat this operation until no more air can be seen coming out into the plastic hose.

Pump the brake lever until it becomes hard, and apply the brake lever and hold it [A].

Quickly open [B] and close [C] the bleed valve while holding the brake lever applied.

Release the brake lever [D].

NOTE

○*The fluid level must be checked often during the bleeding operation and replenished with fresh brake fluid as necessary. If the fluid in the reservoir runs completely out any time during bleeding, the bleeding operation must be done over again from the beginning since air will have entered the line.*

○*Tap the brake hose lightly from the caliper to the reservoir for more complete bleeding.*

Downloaded from www.vulcanriders-sweden.org

Brake Fluid

- Remove the clear plastic hose.
- Tighten:

Torque - Caliper Bleed Valve: 7.8 N·m (0.80 kgf·m, 69 in·lb)
Front Brake Reservoir Cap Screws: 1.5 N·m (0.15 kgf·m, 13 in·lb)

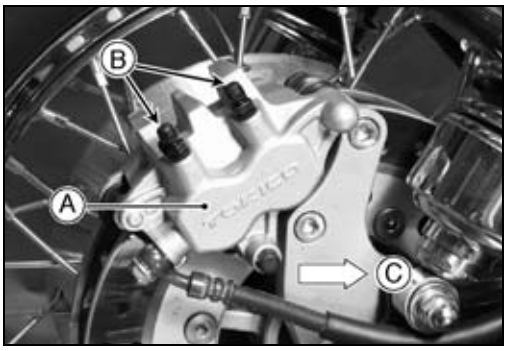

○For the rear caliper [A], bleed the brake line for two bleed valves [B].
Front [C]

- Check the fluid level.
- After bleeding is done, check the brake for good braking power, no brake drag, and no fluid leakage.

⚠ WARNING

When working with the disc brake, observe the precautions listed below.

1. Never reuse old brake fluid.
2. Do not use fluid from a container that has been left unsealed or that has been open for a long time.
3. Do not mix two types and brands of fluid for use in the brake. This lowers the brake fluid boiling point and could cause the brake to be ineffective. It may also cause the rubber brake parts to deteriorate.
4. Don't leave the reservoir cap [A] off for any length of time to avoid moisture contamination of the fluid.
5. Don't change the fluid in the rain or when a strong wind is blowing.
6. Except for the disc pads and disc, use only disc brake fluid, isopropyl alcohol, or ethyl alcohol for cleaning brake parts. Do not use any other fluid for cleaning these parts. Gasoline, engine oil, or any other petroleum distillate will cause deterioration of the rubber parts. Oil spilled on any part will be difficult to wash off completely and will eventually deteriorate the rubber used in the disc brake.
7. When handling the disc pads or disc, be careful that no disc brake fluid or any oil gets on them. Clean off any fluid or oil that inadvertently gets on the pads or disc with a high-flash point solvent. Do not use one which will leave an oily residue. Replace the pads with new ones if they cannot be cleaned satisfactorily.
8. Brake fluid quickly ruins painted surfaces; any spilled fluid should be completely washed away immediately.
9. If any of the brake line fittings or the bleed valve is opened at any time, the **AIR MUST BE BLED FROM THE BRAKE LINE**.

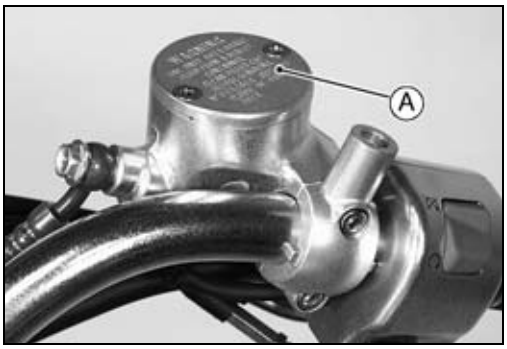

Downloaded from www.vulcanriders-sweden.org

Brake Hoses

Brake Hose Removal/Installation



CAUTION

Brake fluid quickly ruins painted surfaces; any spilled fluid should be completely washed away immediately.

- When removing the brake hose, take care not to spill the brake fluid on the painted or plastic parts.
- When removing the brake hose [A], temporarily secure the end of the brake hose to some high place to keep fluid loss to a minimum.
- Immediately wash away any brake fluid that spills.
- There are washers [B] on each side of the brake hose fitting. Replace them with new ones when installing.
- When installing the hoses, avoid sharp bending, kinking, flattening or twisting, and route the hoses according to Cable, Wire, and Hose Routing section in the General Information chapter.
- Tighten the banjo bolt [C] on the hose fittings.

Torque - Brake Hose Banjo Bolts: 25 N·m (2.5 kgf·m, 18 ft·lb)

- Fill the brake line after installing the brake hose (see Brake Fluid Change).

Brake Hose Inspection

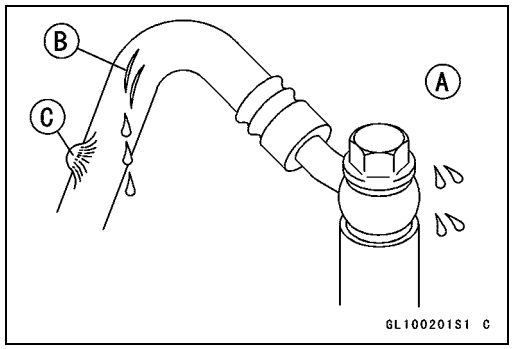

- The high pressure inside the brake line can cause fluid to leak [A] or the hose to burst if the line is not properly maintained. Bend and twist the rubber hose while examining it.

★Replace the hose if any cracks [B] or bulges [C] are noticed.

Downloaded from www.vulcanriders-sweden.org

Downloaded from www.vulcanriders-sweden.org

Suspension

Table of Contents

Exploded View 12-2
Specifications 12-4
Front Fork 12-5
Fork Oil Change 12-5
Removal (each fork leg) 12-6
Installation 12-7
Disassembly 12-9
Assembly 12-10
Inner Tube, Outer Tube Inspection 12-12
Spring Inspection 12-13
Rear Shock Absorber 12-14
Rebound Damping Adjustment 12-14
Air Pressure Adjustment 12-14
Removal 12-15
Installation 12-16
Rear Shock Absorber Inspection 12-16
Scrapping 12-16
Swingarm 12-17
Removal 12-17
Installation 12-17
Swingarm Bearing Removal 12-18
Swingarm Bearing Installation 12-19
Grease Seal and Needle Bearing Lubrication 12-19
Swingarm Bearing, Sleeve Inspection 12-19

Downloaded from www.vulcanriders-sweden.org

Exploded View

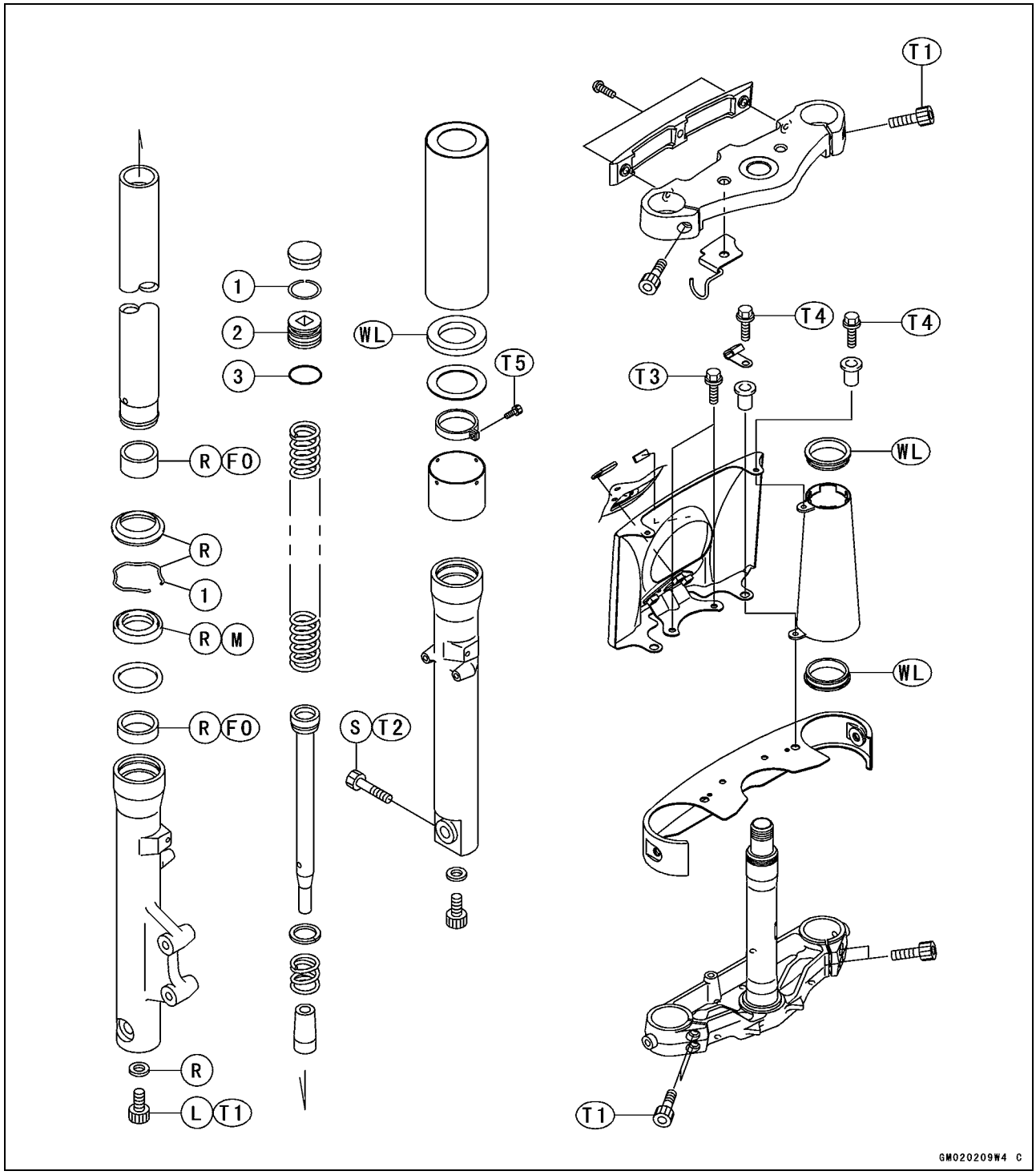

1. Retaining Ring
2. Top Plug
3. O-ring

T1: 20 N·m (2.0 kgf·m, 14 ft·lb)
T2: 34 N·m (3.5 kgf·m, 25 ft·lb)
T3: 7.4 N·m (0.75 kgf·m, 65 in·lb, ϕ6)
T4: 4.4 N·m (0.45 kgf·m, 39 in·lb, ϕ5)
T5: 3.9 N·m (0.40 kgf·m, 35 in·lb)
FO: Apply fork oil.
L: Apply a non-permanent locking agent.
M: Apply molybdenum disulfide grease.
R: Replacement Parts
S: Follow the specific tightening sequence.
WL: Apply a soap and water solution or rubber lubricant.

Downloaded from www.vulcanriders-sweden.org

Exploded View

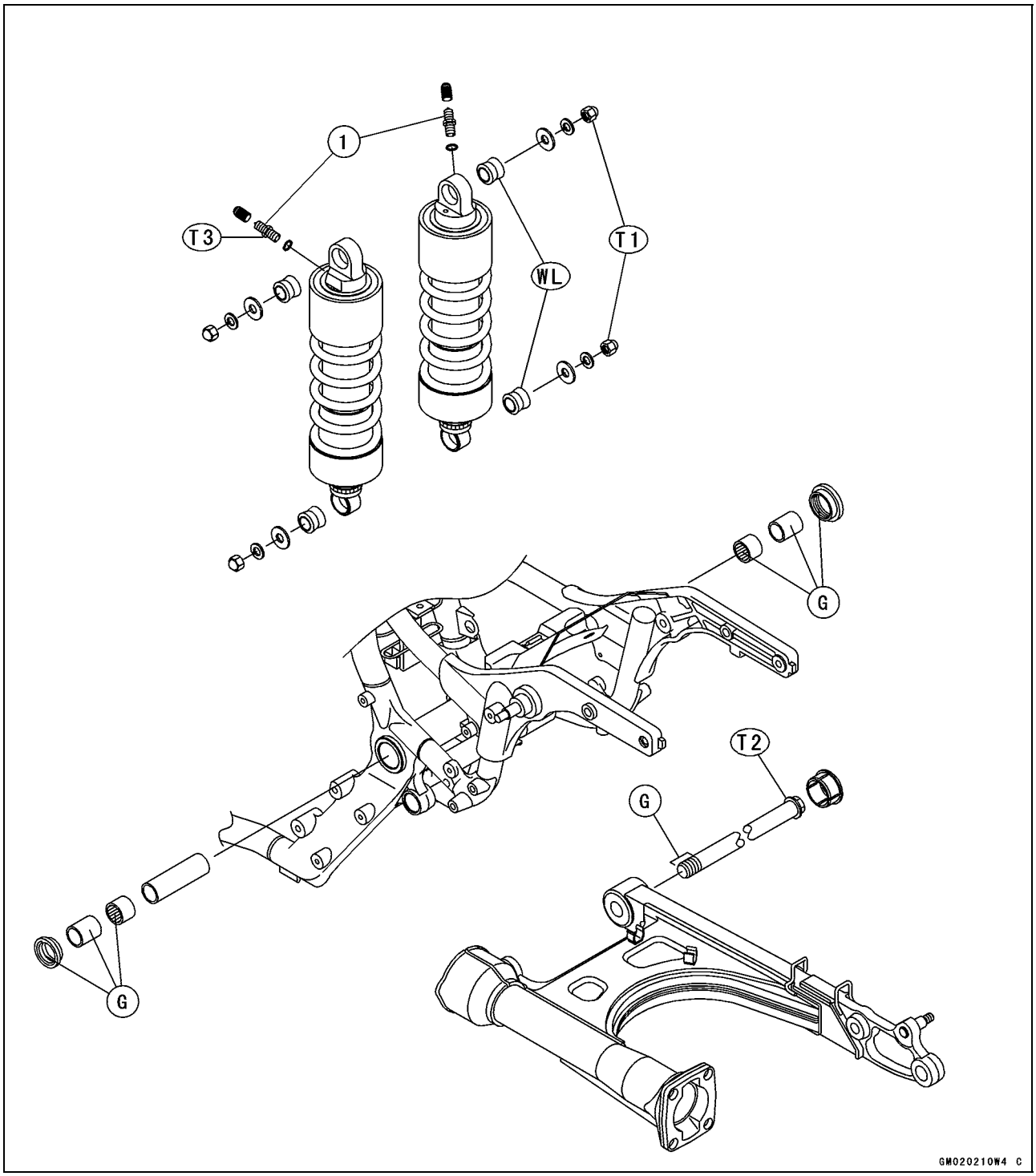

1. Air Valves
T1: 34 N·m (3.5 kgf·m, 25 ft·lb)
T2: 108 N·m (11.0 kgf·m, 80 ft·lb)
T3: 5.4 N·m (0.55 kgf·m, 47 in·lb)
G: Apply grease.
W: Apply a soap and water solution or rubber lubricant.

Downloaded from www.vulcanriders-sweden.org

Specifications

Item	Standard
Front Fork (Per One Unit)	
Fork Inner Tube Diameter	ϕ41 mm (ϕ1.6 in.)
Fork Spring Setting	Non-adjustable
Air Pressure	Atmospheric pressure (Non-adjustable)
Rebound Damper Setting	Non-adjustable
Fork Oil Viscosity	SHOWA SS-8 or equivalent
Fork Oil Capacity	467 ±2.5 mL (15.8 ±0.08 US oz) (completely dry) approx. 395 mL (13.4 US oz) (when changing oil)
Fork Oil Level	Fully compressed, without fork spring, and below from inner tube top: 137 ±2 mm (5.4 ±0.08 in.)
Fork Spring Free Length	565.2 mm (22.25 in.) (Service Limit: 554 mm (21.8 in.))
Rear Shock Absorber	
Rebound Damper Set	No.2 of 4 positions
Air Pressure	
Standard	Atmospheric pressure:
Usable Range	0 kPa (0 kgf/cm², 0 psi) ~ 294 kPa (3.0 kgf/cm², 43 psi)

Special Tools - Fork Cylinder Holder Handle: 57001-183
Fork Cylinder Holder Adapter: 57001-1057
Oil Seal & Bearing Remover: 57001-1058
Bearing Driver Set: 57001-1129
Fork Outer Tube Weight: 57001-1218
Front Fork Oil Seal Driver: 57001-1219
Jack: 57001-1238
Fork Oil Level Gauge: 57001-1290
Attachment Jack: 57001-1398

Downloaded from www.vulcanriders-sweden.org

Front Fork

Fork Oil Change

The oil should be changed in accordance with the Periodic Maintenance Chart.

- Remove the front fork (see Front Fork Removal).
- Remove the top cap.
- Hold the outer tube vertically in a vise.
- Push the top plug [A] down to remove the plug retaining ring [B].
- Remove the plug slowly, so the plug doesn't shoot out of the fork tube.

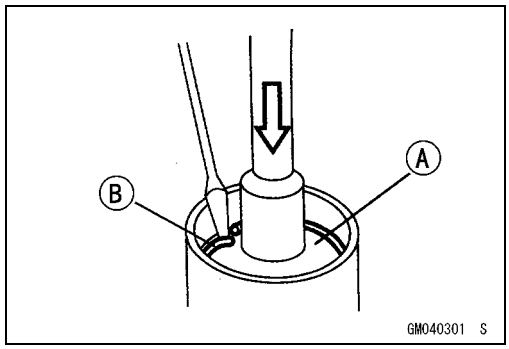

- Remove the fork spring [A].

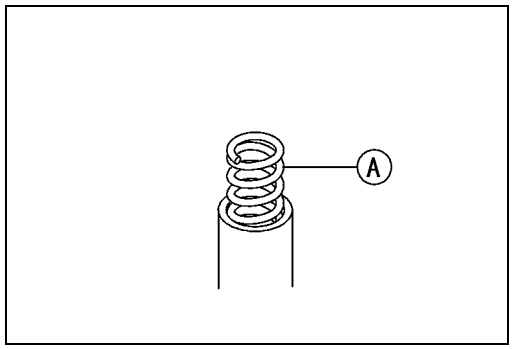

- Pour out the fork oil [A] with the fork upside down.
- Hold the outer tube vertically in a vise.
- Fill the front fork with the specified oil.

Fork Oil Viscosity: SHOWA SS-8 or equivalent

Fork Oil Capacity (when changing oil): Approx. 395 mL (13.4 US oz)

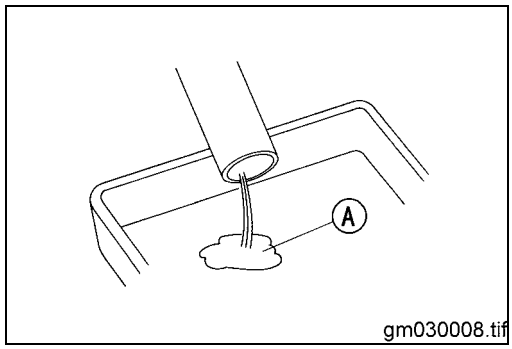

- Wait for about five minutes so that any suspended air bubbles can surface.
- Measure the oil level, using the fork oil level gauge [A].

Special Tool - Fork Oil Level Gauge: 57001-1290

○Set the gauge stopper [B] so that its lower side shows the oil level distance specified [C].

○Insert the gauge tube into the inner tube [D] and position the stopper across the top of the inner tube [E].

○Pull the handle slowly to draw out the excess oil until no more oil comes up the tube.

★If no oil is drawn out from the beginning, there is not enough oil in the fork. Pour in some more oil, then draw out the excess.

Front Fork Oil Level (Fully compressed without fork spring)

Standard: 137 ±2 mm (5.4 ±0.08 in.)

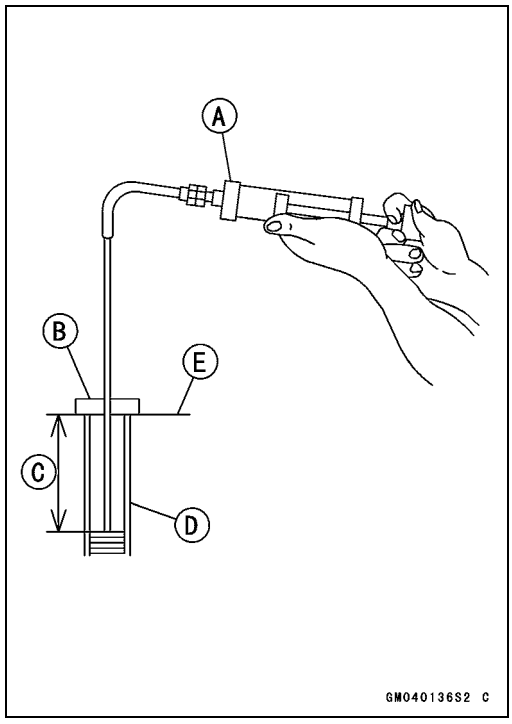

Downloaded from www.vulcanriders-sweden.org

Front Fork

- Install the fork spring with the smaller diameter end [A] facing down [B].
- Tighten:

Torque - Front Fork Clamp Bolts (Lower): 20 N·m (2.0 kgf·m, 14.5 ft·lb)
Front Fork Clamp Bolts (Upper): 20 N·m (2.0 kgf·m, 14.5 ft·lb)
Front Axle Clamp Bolt: 34 N·m (3.5 kgf·m, 25 ft·lb)
Front Axle Nut: 108 N·m (11.0 kgf·m, 80 ft·lb)
Front Caliper Mounting Bolts: 34 N·m (3.5 kgf·m, 25 ft·lb)

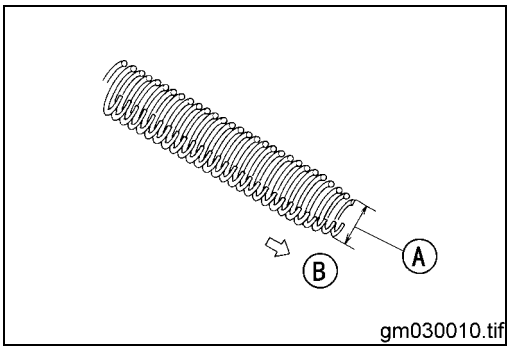

NOTE

○*Tighten the two clamp bolts alternately two times to ensure even tightening torque.*

- Install:
  Fork Spring [A]
  Top Plug [B] and O-ring [C]
  Retaining Ring [D]
  Top Cap [E]

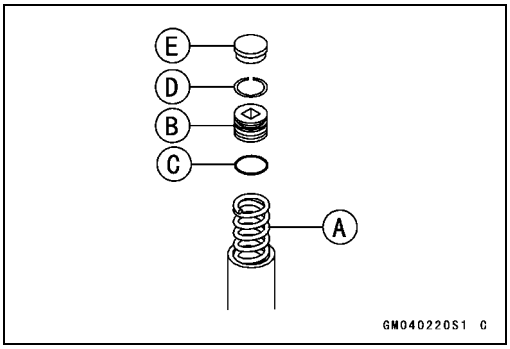

Removal (each fork leg)

- Using the jack [A] and attachment jack [B] under the frame pipe ribs [C], and a commercially available jack [D] under the engine [E], lift the front wheel [F] **OFF** the ground until the rear wheel [G] touches the ground.

Special Tools - Jack: 57001-1238
Attachment Jack: 57001-1398

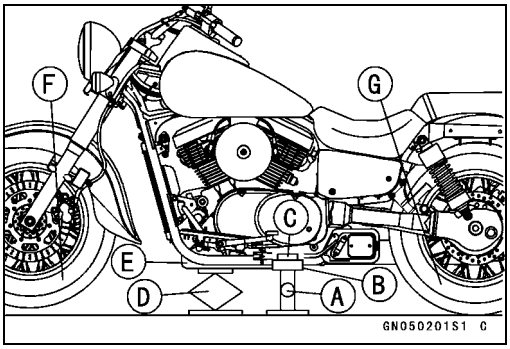

CAUTION

Be sure to put the rear wheel on the ground when removing the front fork, or the motorcycle may fall over. The motorcycle could be damaged.

⚠ WARNING

Be sure to put the rear wheel on the ground when removing the front fork, or the motorcycle may fall over. It could cause an accident and injury.

Downloaded from www.vulcanriders-sweden.org

Front Fork

CAUTION

Cover the fuel tank with a towel to protect the painted surface.

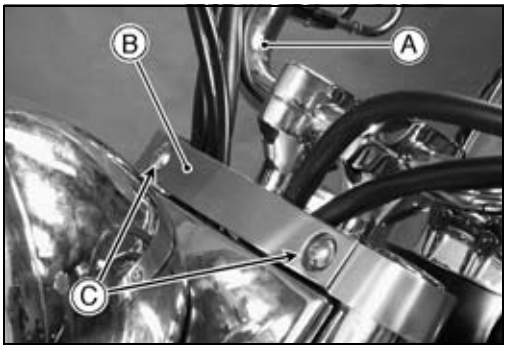

- Remove the handlebar [A] by taking off the clamp bolts (see Handlebar Removal in the Steering chapter).
- Remove the cable holder [B] by unscrewing two bolts [C].

- Remove:
  Steering Stem Head Nut [A] (rear view)
  Washer [B]
  O-ring [C] under Washer
  Upper Clamp Bolts [D]
  Steering Stem Head [E]



NOTE

○*Be sure to remove the O-ring for removal of the steering stem head. Replace the O-ring with a new one.*

- Remove both upper fork covers [A] by unscrewing the mounting bolts [B].
- Remove:
  Front Wheel (see Wheels/Tires chapter)
  Front Fender (see Frame chapter)



- Loosen the lower fork clamp bolts [A] and remove the fork leg [B].

○With a twisting motion [C], work the fork leg down out.

- Remove the other fork leg in the same manner.

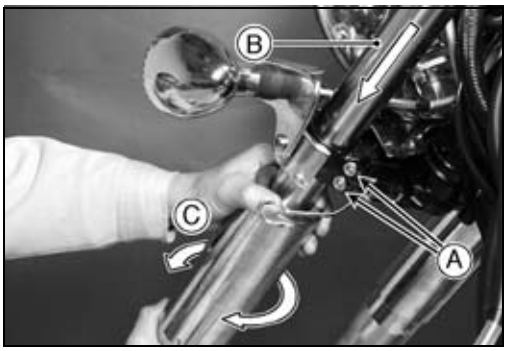

Installation

- Run the cables, wires, and hoses as shown in the Cable, Wire, and Hose Routing section of the General Information chapter.
- Apply a soap and water solution or rubber lubricant to the rubber damper [C] in the fork cover [A] and install the right and left covers on the front fork.
  Washer [B]

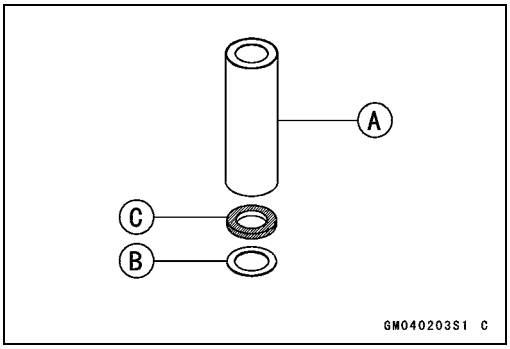

Downloaded from www.vulcanriders-sweden.org

Front Fork

- Install the fork leg [A] and push [B] it up tightly against the stem bottom.
- Temporarily tighten the lower fork clamp bolts [C].

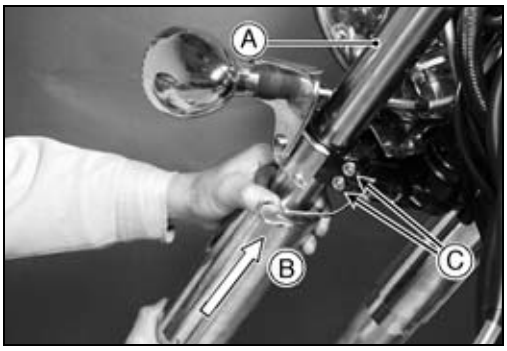

- Apply a soap and water solution or rubber lubricant to the rubber dampers [A] and install the upper fork covers [B], four well nuts [C], and two clamps [D].
- Tighten:

Torque - Upper Fork Cover Bolts (φ5) [E]: 4.4 N·m (0.45 kgf·m, 39 in·lb)
Headlight Cover Bolts (φ6) [F]: 7.4 N·m (0.75 kgf·m, 65 in·lb)

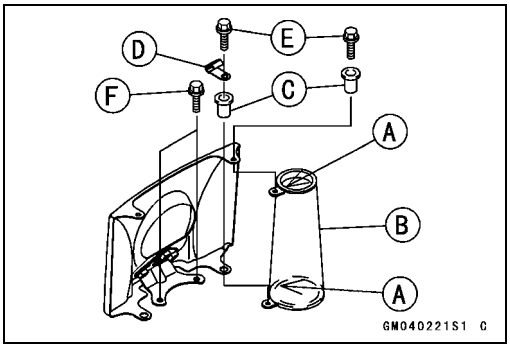

- Install:
  Steering Stem Head
  O-ring, Washer, and Stem Head Nut
- Temporarily tighten the upper fork clamp bolts.

○Check that the top end [A] of the inner tube is **0 ~ 0.5 mm (0 ~ 0.02 in.)** [B] lower than the upper surface [C] of the steering stem head. Otherwise reinstall the fork leg.
Front [D]

- Check the steering (see Steering Check in the Steering chapter).

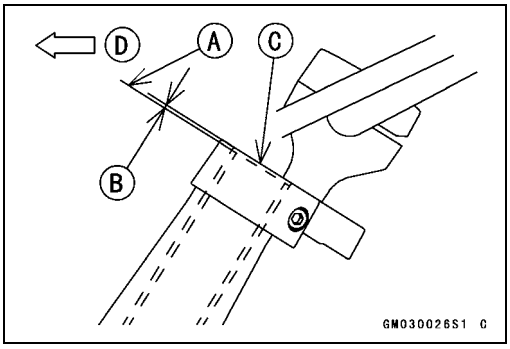

NOTE

○*Tighten the fork upper clamp bolts and then the stem head nut, and finally the fork lower clamp bolts.*

Torque - Front Fork Clamp Bolts (Upper): 20 N·m (2.0 kgf·m, 14 ft·lb)
Steering Stem Head Nut: 88 N·m (9.0 kgf·m, 65 ft·lb)
Front Fork Clamp Bolts (Lower): 20 N·m (2.0 kgf·m, 14 ft·lb)

- Install the removed parts and tighten:

Torque - Handlebar Holder Bolts: 34 N·m (3.5 kgf·m, 25 ft·lb)
Front Axle Clamp Bolt: 34 N·m (3.5 kgf·m, 25 ft·lb)
Front Axle Nut: 108 N·m (11.0 kgf·m, 80 ft·lb)
Front Caliper Mounting Bolts: 34 N·m (3.5 kgf·m, 25 ft·lb)

- Check the front brake effectiveness after installation.

⚠ WARNING

Do not attempt to ride the motorcycle until a full brake lever is obtained by pumping the brake lever unitl the pads are against the disc. The brake will not function on the first application of the lever if this is not done.

Downloaded from www.vulcanriders-sweden.org

Front Fork

Disassembly

- Remove the front fork (see Front Fork Removal in this chapter).
- Remove the fork cover [A]. The washer [B], and damper [C] come off.

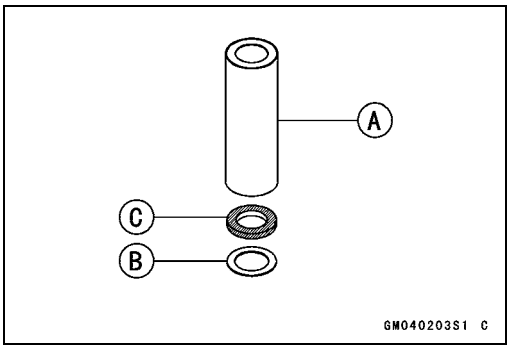

- Unscrew the bolt [A], and remove the spacer [B].

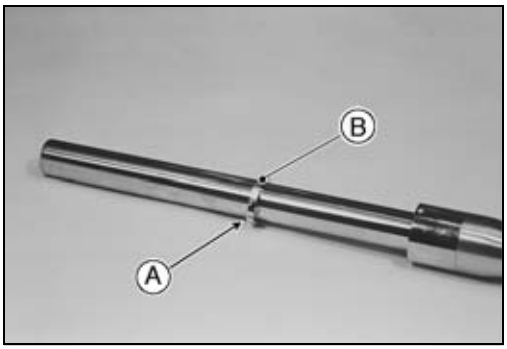

- Drain the fork oil (see Fork Oil Change in this chapter).

○The following parts are removed during draining the fork oil.

Top Cap [E]
Retaining Ring [D]
Top Plug [B] and O-ring [C]
Fork Spring [A]

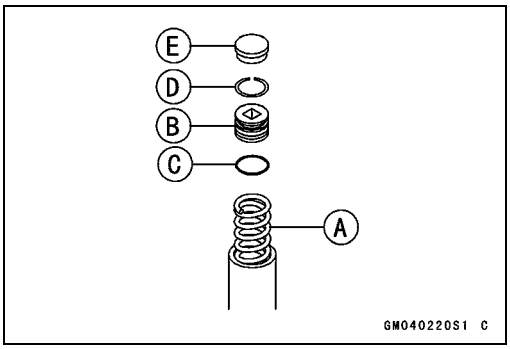

- Hold the front fork horizontally in a vise [A].
- Stop the cylinder unit [B] from turning by using the special tools.
- Unscrew the Allen bolt [C], and take the gasket out of the bottom of the outer tube.

Special Tools - Fork Cylinder Holder Handle: 57001-183 [D]
Fork Cylinder Holder Adapter: 57001-1057 [E]

- Take the cylinder unit out of the inner tube.

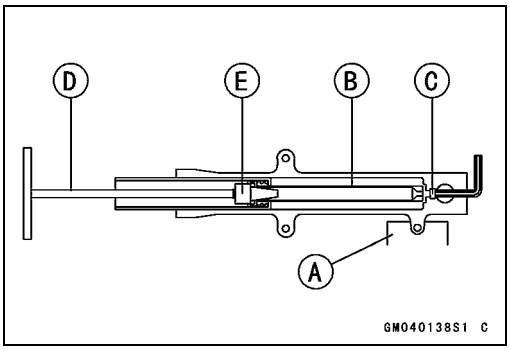

- Tap the dust seal cover [A] out of the fork outer tube, using a thin-bladed screwdriver.

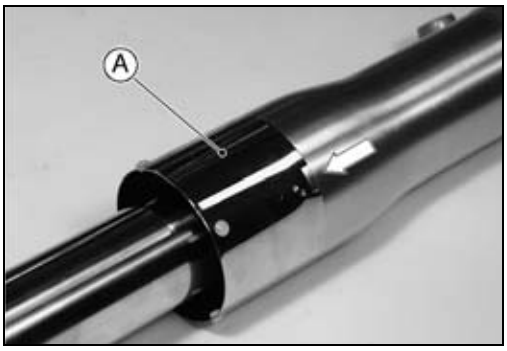

Downloaded from www.vulcanriders-sweden.org

Front Fork

● Separate the inner tube from the outer tube as follows:
○Remove the dust seal [A] from the outer tube.
○Remove the retaining ring [B] from the outer tube.

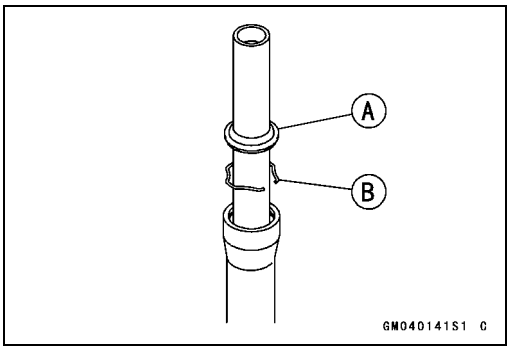

○Use the fork outer tube weight [A] to separate the outer tube [B] from the inner tube [C].
○Holding the inner tube by hand, pull the outer tube several times to pull out the inner tube.

Special Tool - Fork Outer Tube Weight: 57001-1218

○Take out the cylinder base out of the outer tube.

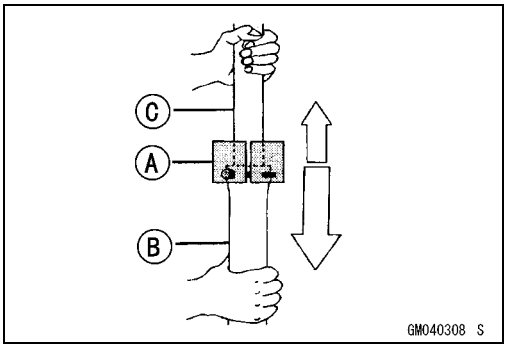

● Remove the inner tube guide bushing [A], outer tube guide bushing [B], washer [C], and oil seal [D], from the inner tube.

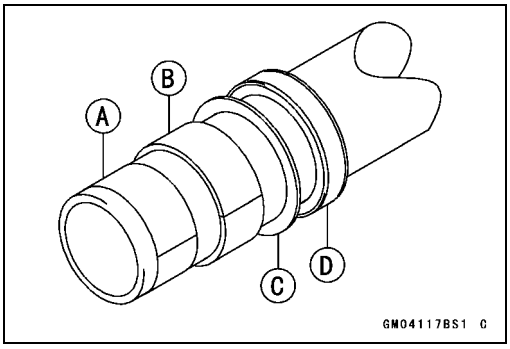

Assembly

● Replace the following parts with new ones after removal.
Dust Seal [A]
Retaining Ring [B]
Oil Seal [C]
Inner Guide Bushing [D]
Outer Guide Bushing [E]
Bottom Allen Bolt Gasket [F]

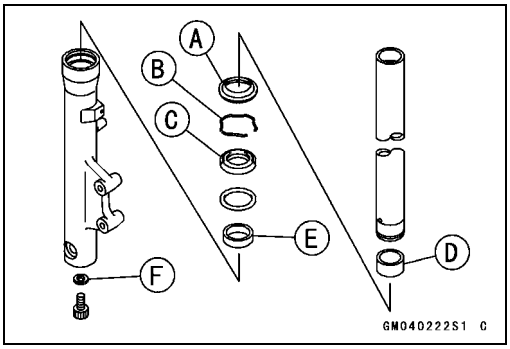

● Put the cylinder unit [A] with the spring into the inner tube [B], protruding from the inner tube, and install the cylinder base [C] onto the bottom end of the cylinder unit.
○Install the cylinder base with the tapered end [D] up.
● Install the inner tube, cylinder unit, and cylinder base as a set into the outer tube.

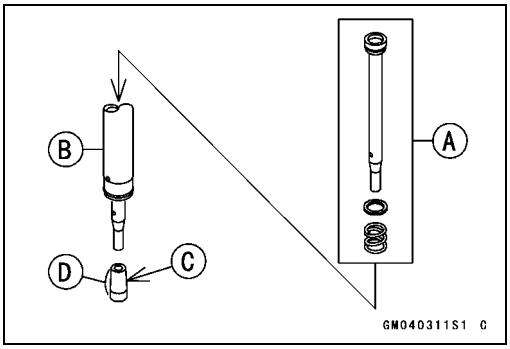

Downloaded from www.vulcanriders-sweden.org

Front Fork

● Install the new guide bushing [A] with a used guide bushing [B] on it by tapping the used guide bushing with fork oil seal driver [C] until it stops.
○The split [D] of the bushing should face toward the side [E] of the vehicle.

Special Tool - Front Fork Oil Seal Driver: 57001-1219

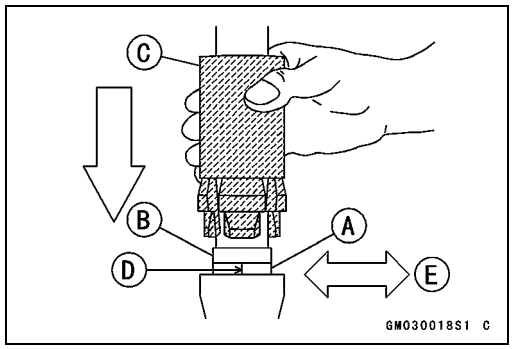

● Apply molybdenum disulfide grease to the oil seal lips and install the washer [A] and the oil seal [B] into the outer tube.
○Face the flat side [C] of the seal upward.

Special Tool - Front Fork Oil Seal Driver [D]: 57001-1219

● Install:
Retaining Ring
Dust Seal

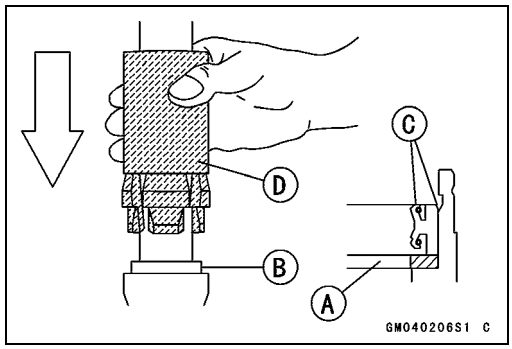

● Face the notch [A] of the dust seal cover rearward [B] and install the dust seal cover by tapping with the fork outer tube weight [C] until it stops.

Special Tool - Fork Outer Tube Weight: 57001-1218

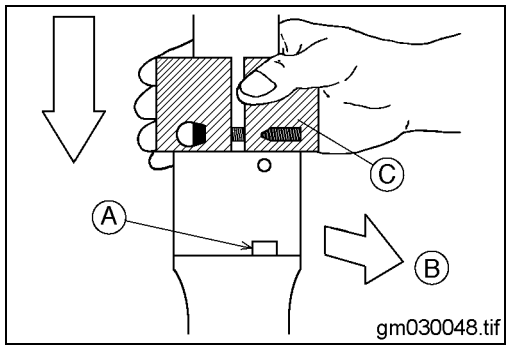

● Stake [A] the dust seal cover with a punch.

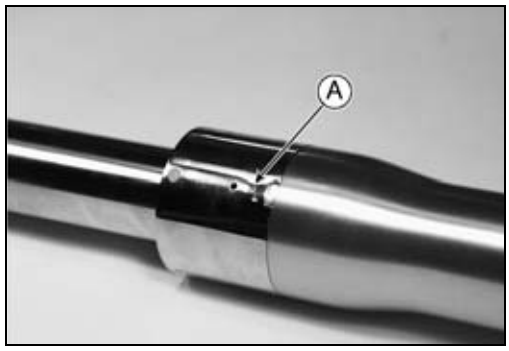

● Apply a non-permanent locking agent to the threads of the Allen bolt and screw the Allen bolt into the bottom of the outer tube.
● Hold the front fork horizontally in a vise [A].
● Hold the cylinder unit [B] with the special tools and tighten the Allen bolt [C].

Special Tools - Fork Cylinder Holder Handle: 57001-183 [D]
Fork Cylinder Holder Adapter: 57001-1057 [E]

Torque - Front Fork Bottom Allen Bolt: 20 N·m (2.0 kgf·m, 14 ft·lb)

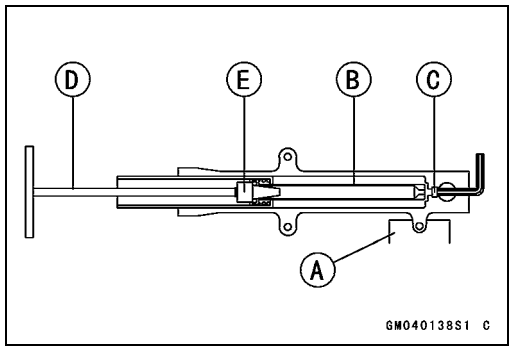

Downloaded from www.vulcanriders-sweden.org

Front Fork

- Install the spacer [A] so that the distance [B] between the inner tube top [C] and the spacer top is **249.6 mm (9.83 in.)**.
- Tighten:

Torque - Spacer Bolt: 3.9 N·m (0.40 kgf·m, 35 in·lb)

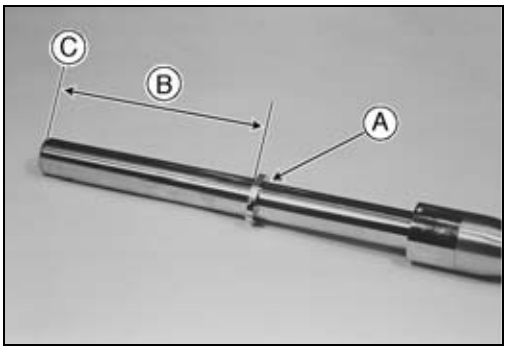

- Apply a soap and water solution to the damper.
- Put the damper [C] and washer [B] into the fork cover [A], and install them onto the fork.
- Pour in the specified type of oil and install the parts removed (see Fork Oil Change).

Fork Oil Viscosity: SHOWA SS-8 or equivalent

Fork Oil Capacity (completely dry): 467 ±2.5 mL (15.8 ±0.8 US oz)

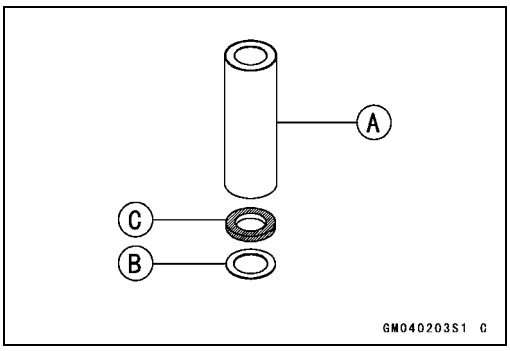

Inner Tube, Outer Tube Inspection

- Visually inspect the inner tube [A] and repair any damage.
- Nick or rust damage can sometimes be repaired by using a wet-stone to remove sharp edges or raised areas which cause seal damage.

★If the damage is not repairable, replace the inner tube. Since damage to the inner tube damages the oil seal, replace the oil seal whenever the inner tube is repaired or replaced.

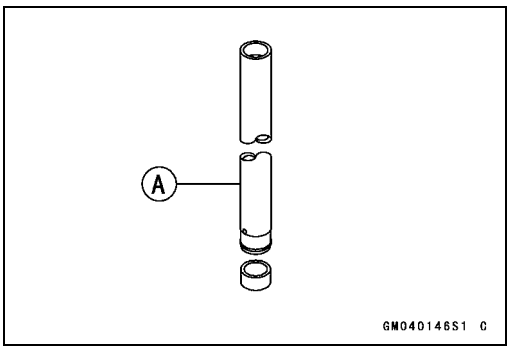

CAUTION

If the inner tube is badly bent or creased, replace it. Excessive bending, followed by subsequent straightening, can weaken the inner tube.

- Temporarily assemble the inner tube [A] and outer tube [B], and pump [C] them back and forth manually to check for smooth operation.

★If you feel binding or catching, the inner and outer tubes must be replaced.

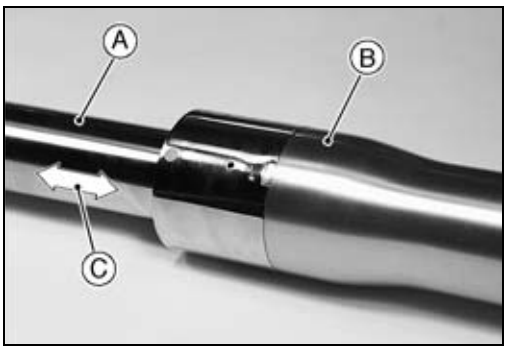

⚠ WARNING

A straightened inner or outer fork tube may fail in use, possibly, causing an accident. Replace a badly bent or damaged inner or outer tube, and inspect the other tube carefully before reusing it.

Downloaded from www.vulcanriders-sweden.org

Front Fork

Spring Inspection

- Since the fork spring [A] becomes shorter as it weakens, check its free length [B] to determine its condition.

★If the spring of either fork leg is shorter than the service limit, it must be replaced. If the length of the replacement spring and that of the remaining spring vary greatly, the remaining spring should also be replaced in order to keep the fork legs balanced for motorcycle stability.

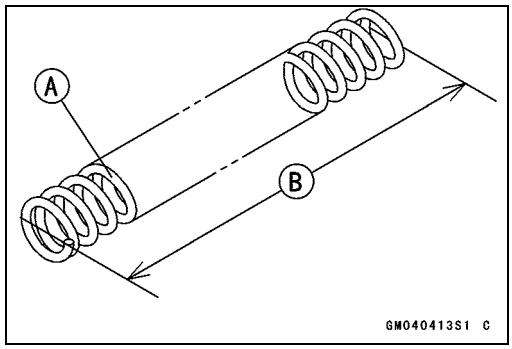

Fork Spring Free Length

Standard: 565.2 mm (22.25 in.)

Service Limit: 554 mm (21.8 in.)

Downloaded from www.vulcanriders-sweden.org

Rear Shock Absorber

Rebound Damping Adjustment

The rebound damping force adjuster on each rear shock absorber has 4 positions so that the rebound damping force can be adjusted for different road and loading conditions. The numbers on the adjuster show the setting position.

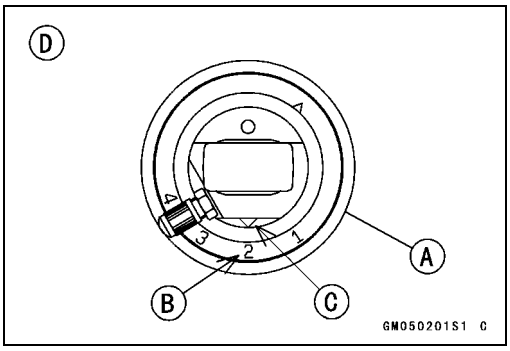

- Turn the adjuster [A] until the desired number [B] aligns with the triangular mark [C].
  Top View [D]

○The standard adjuster setting is **No.2** for an average-build rider of 68 kg (150 lb) with no passenger and no accessories.

★If the damper setting feels too soft or too stiff, adjust it in accordance with the following table.

Rebound Damping Adjustment

Adjuster Position	Damping Force	Setting	Load	Road	Speed
1	Weak	Soft	Light	Good	Low
2	↑	↑	↑	↑	↑
3	↓	↓	↓	↓	↓
4	Strong	Hard	Heavy	Bad	High

Air Pressure Adjustment

The air pressure in the rear shock absorbers can be adjusted for different road and loading conditions.

The following table shows an example of air pressure adjustment. To obtain stable handling and a suitable ride, adjust the air pressure as indicated. The standard air pressure is **atmospheric pressure** for an average-build rider of 68 kg (150 lb) with no passenger and no accessories. Ordinarily, the heavier the total load becomes, the higher the air pressure should be set.

Air Pressure Adjustment

Air Pressure	Setting	Load	Road
0 kPa (0 kgf/cm², 0 psi)	Soft	Light	Good
↑	↑	↑	↑
↓	↓	↓	↓
294 kPa (3.0 kgf/cm², 43 psi)	Hard	Heavy	Bad

- Adjust the air pressure:

NOTE

○*Check and adjust the air pressure when the rear shock absorbers are cold (room temperature).*

○Raise the rear wheel off the ground, using the jack [A], and the attachment jack [B].
Front [C]

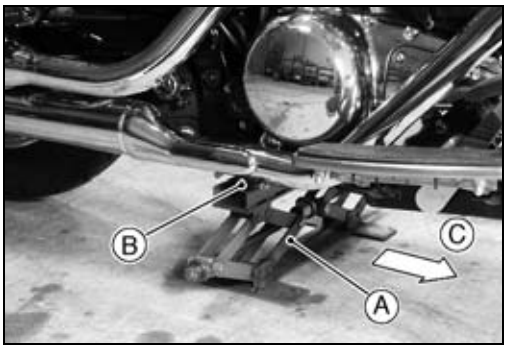

Special Tools - Jack: 57001-1238
Attachment Jack: 57001-1290

Downloaded from www.vulcanriders-sweden.org

Rear Shock Absorber

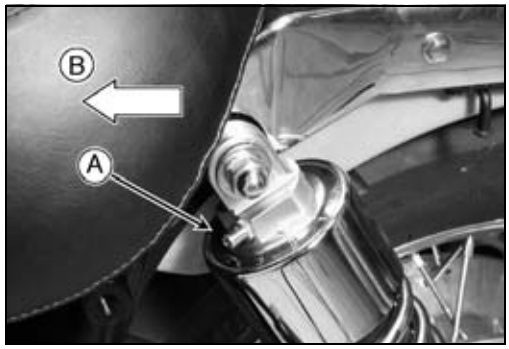

○Take off the air valve caps on the right and left shock absorbers.
Air Valve [A]
Front [B]

○Check the air pressure with a commercial air pressure gauge.

NOTE

○*Do not use tire gauges for checking air pressure. They may not indicate the correct air pressure because of air leakage that occur when the gauge is applied to the valve.*

○To lower the air pressure, push the valve core in slightly. To raise the pressure, inject air through the valve with a tire pump. Change the air pressure within the range specified in the preceding table to suit various riding conditions.

CAUTION

Inject air little by little so that air pressure does not rise rapidly. Air pressure exceeding 490 kPa (5.0 kgf/cm², 71 psi) may damage the oil seal.
Try to set the air pressure of the right and left shock absorbers as equally as possible.

⚠ WARNING

Be sure to adjust the air pressure within the usable range. Pressure too high can produce a hazardous riding condition.
Only air or nitrogen gas can be used. Never inject oxygen or any kind of explosive gas.

Removal

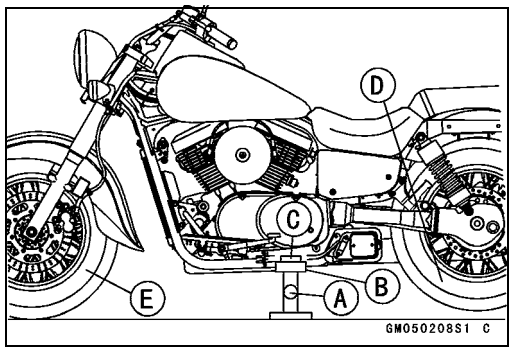

● Using the jack [A] and attachment jack [B] under the frame pipe ribs [C], lift the rear wheel [D] **OFF** the ground until the front wheel [E] touches the ground.

Special Tools - Jack: 57001-1238
Attachment Jack: 57001-1398

CAUTION

Be sure to put the front wheel ON the ground when removing the rear shock absorber, or the motorcycle may fall over. The motorcycle could be damaged.

⚠ WARNING

Be sure to put the front wheel ON the ground when removing the rear shock absorber, or the motorcycle may fall over. It could cause an accident and injury.

Downloaded from www.vulcanriders-sweden.org

Rear Shock Absorber

- Squeeze the brake lever slowly and hold it with a band [A].
  Front [B]

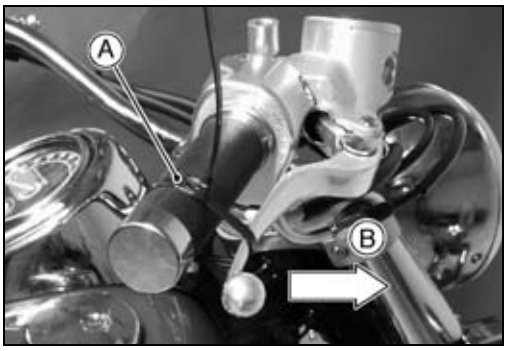

CAUTION

Be sure to hold the front brake when removing the shock absorber, or the motorcycle may fall over. The motorcycle could be damaged.

⚠ WARNING

Be sure to hold the front brake when removing the shock absorber, or the motorcycle may fall over. It could cause an accident and injury.

- Remove the cap nuts [A], lockwashers, and flat washers from both ends of the rear shock absorber [B].
- Pull the rear shock absorbers off the frame.

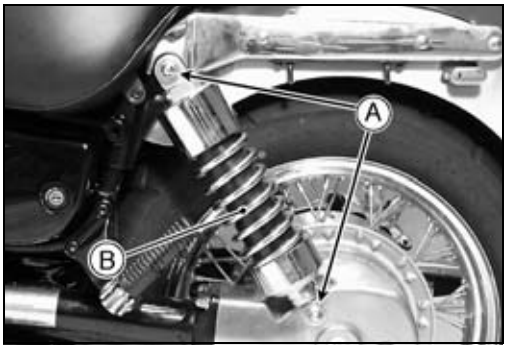

Installation

- Install the rear shock absorber so that the air valve faces forward.
- Tighten the rear shock absorber nuts (cap nuts) to the specified torque.

Torque - Rear Shock Absorber Nuts: 34 N·m (3.5 kgf·m, 25 ft·lb)

Rear Shock Absorber Inspection

- Remove the rear shock absorbers [A].
- Visually inspect the following items:
  Smooth Stroke
  Oil Leakage
  Crack or Dent

★If there is any damage to the rear shock absorber or one unit feels weaker than the other, replace both shock absorbers as a set.

- Visually inspect the rubber bushings [B].

★If they show any signs of damage, replace them.

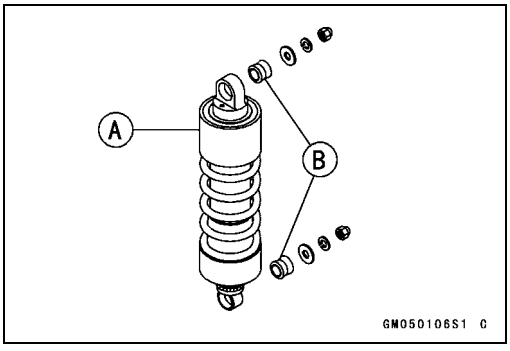

Scrapping

- Remove the rear shock absorbers (see Rear Shock Absorber Removal).

⚠ WARNING

Since the rear shock absorber contains air, do not incinerate the rear shock absorber without first releasing the air or it may explode.
Before a rear shock absorber is scrapped, remove the air valve [A].

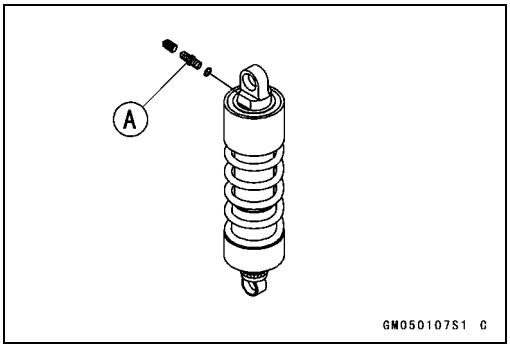

Downloaded from www.vulcanriders-sweden.org

Swingarm

Removal



- Before removing the swingarm, unscrew the banjo bolt [A] on the rear caliper [B].

○Temporarily secure the end of the brake hose to some high place to keep fluid loss to a minimum.

- Immediately wash away any brake fluid that spills.
- Detach the rear brake hose [C] from the holders [D] on the swingarm.
- Using the jack and attachment jack under the frame pipe ribs, lift the rear wheel **OFF** the ground until the front wheel touches the ground (see Rear Shock Absorber Removel).

Special Tools - Jack: 57001-1238
Attachment Jack: 57001-1398

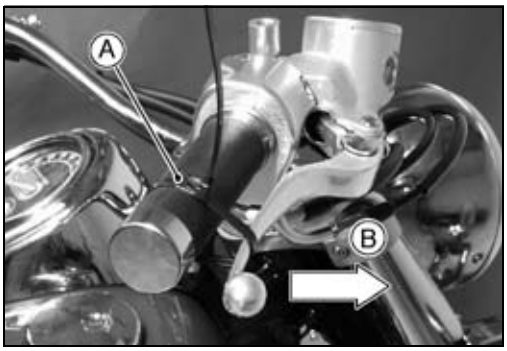

- Squeeze the brake lever slowly and hold it with a band [A].

Front [B]

CAUTION

Be sure to hold the front brake when removing the swingarm, or the motorcycle may fall over. The motorcycle could be damaged.

⚠ WARNING

Be sure to hold the front brake when removing the swingarm, or the motorcycle may fall over. It could cause an accident and injury.

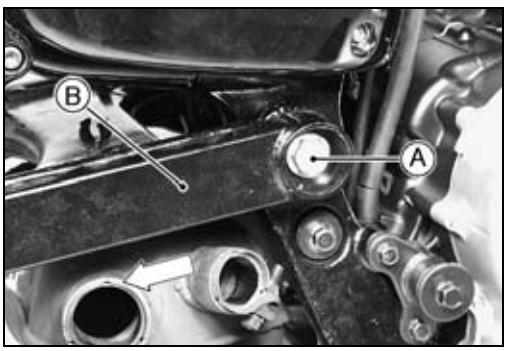

- Remove:
  Rear Wheel (see Wheels/Tires chapter)
  Both Rear Footpegs and Brackets
  Final Gear Case (see Final Drive chapter)
- Remove the right rear shock absorber.
- Pull off the pivot cap.
- Unscrew the pivot shaft [A], and pull it out while turning.
- Pull the swingarm [B] rearward, and take it off.

CAUTION

Do not tap the swingarm pivot shaft when removing or installing. Push or pull the pivot shaft while turning the shaft. Tapping on the shaft could damage the needle bearings in the swingarm.

Installation

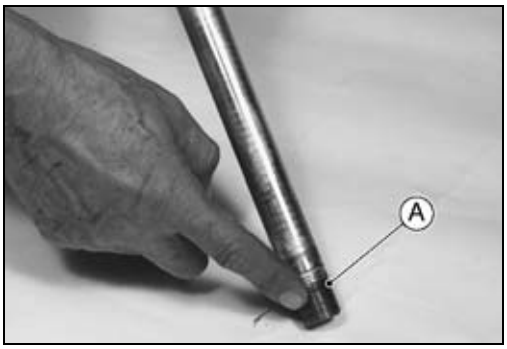

- Apply grease to the needle bearings and grease seals.
- Apply grease to the threads [A] of the swingarm pivot shaft.
- Tighten:

Torque - Swingarm Pivot Shaft: 108 N·m (11.0 kgf·m, 80 ft·lb)

Downloaded from www.vulcanriders-sweden.org

Swingarm

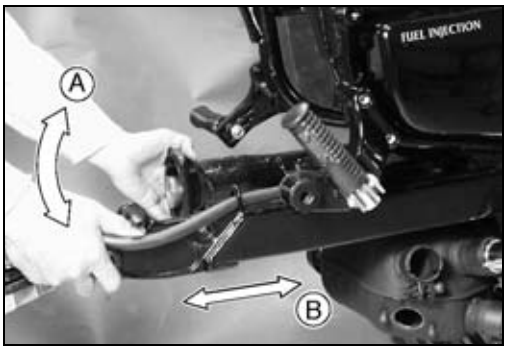

- Move the swingarm up and down [A] to check for abnormal friction, and push and pull [B] it to check for bearing play.
- Tighten:

Torque - Rear Shock Absorber Nuts: 34 N·m (3.5 kgf·m, 25 ft·lb)
Rear Footpeg Bracket Bolts: 20 N·m (2.0 kgf·m, 14 ft·lb)
Rear Caliper Mounting Bolts: 34 N·m (3.5 kgf·m, 25 ft·lb)
Rear Caliper Holder Bolt: 64 N·m (6.5 kgf·m, 47 ft·lb)

- Install the rear wheel (see Wheels/Tires chapter).
- After installing the swingarm, replenish the brake fluid into the reservoir and bleed the brake line (see Brake Line Bleeding in Brakes chapter).

Swingarm Bearing Removal

- Remove:
  Swingarm (see this chapter)
  Right and Left Grease Seals
  Right and Left Sleeves [A]



- Remove the needle bearings from the frame, using the oil seal & bearing remover [A].

Special Tool - Oil Seal & Bearing Remover: 57001-1058

- Replace the bearings and sleeves with new ones.
- Remove the other side bearing in the same manner.



Downloaded from www.vulcanriders-sweden.org

Swingarm

Swingarm Bearing Installation

- Apply plenty of grease to the needle bearings, and sleeve.
- Be sure to install the needle bearings so that the manufacturer's marks are faced out. This prevents bearing damage.
- Position the bearings [A] as shown, using a suitable bearing driver in the bearing driver set.
  Sleeves [B]
  Grease Seals [C]
  6 mm [D]

Special Tool - Bearing Driver Set: 57001-1129

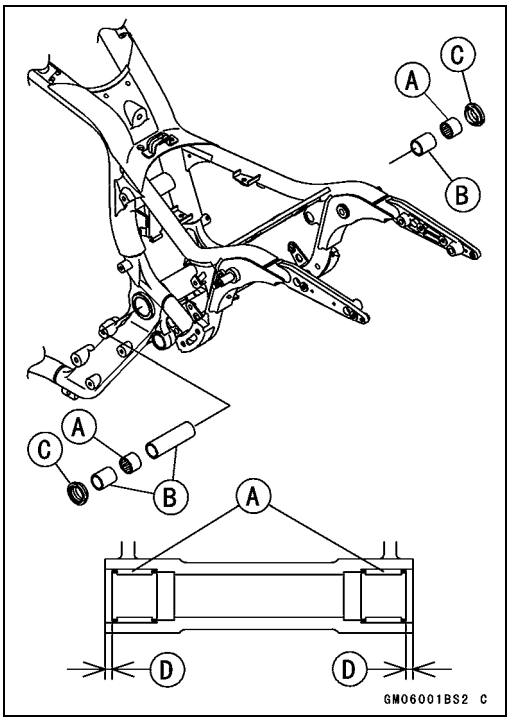

Grease Seal and Needle Bearing Lubrication

- Apply grease [A] to the inner surfaces of the needle bearings in accordance with the Periodic Maintenance Chart.
- Apply a thin coat of grease to the lips of the grease seals [B].

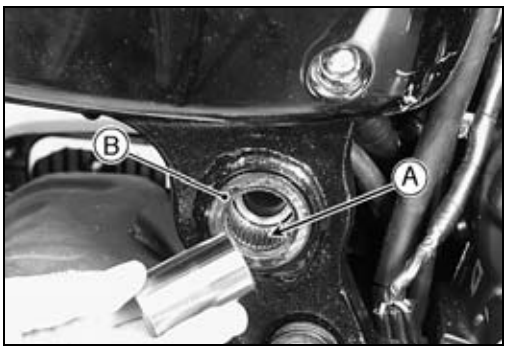

Swingarm Bearing, Sleeve Inspection

CAUTION
Do not remove the bearings for inspection. Remove may damage them.

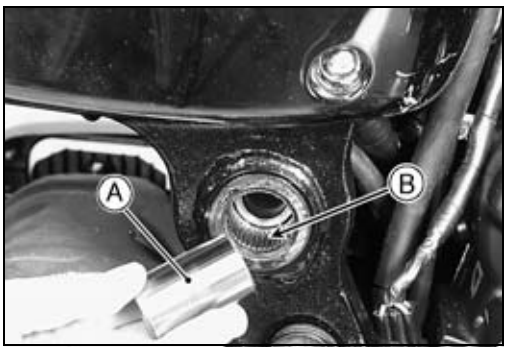

- Visually inspect the swingarm sleeves [A] and needle bearings [B].
- The rollers in a needle bearing normally wear very little, and wear is difficult to measure. Instead of measuring, inspect the bearing in the swingarm for abrasion, color change, or other damage.

★If there is any doubt as to the condition of any of the needle bearings or sleeve, replace the sleeve, and needle bearings as a set.

Downloaded from www.vulcanriders-sweden.org

Downloaded from www.vulcanriders-sweden.org

Steering

Table of Contents

Exploded View 13-2
Specifications 13-3
Handlebar 13-4
  Handlebar Removal 13-4
  Handlebar Installation 13-4
Steering 13-5
  Steering Inspection 13-5
  Steering Adjustment 13-5
Steering Stem 13-7
  Removal 13-7
  Installation 13-9
  Steering Stem Warp Inspection 13-10
Steering Stem Bearing 13-11
  Stem Bearing Removal 13-11
  Stem Bearing Installation 13-11
  Stem Bearing Lubrication 13-12
  Stem Cap Deterioration, Damage Inspection 13-12

Downloaded from www.vulcanriders-sweden.org

Exploded View

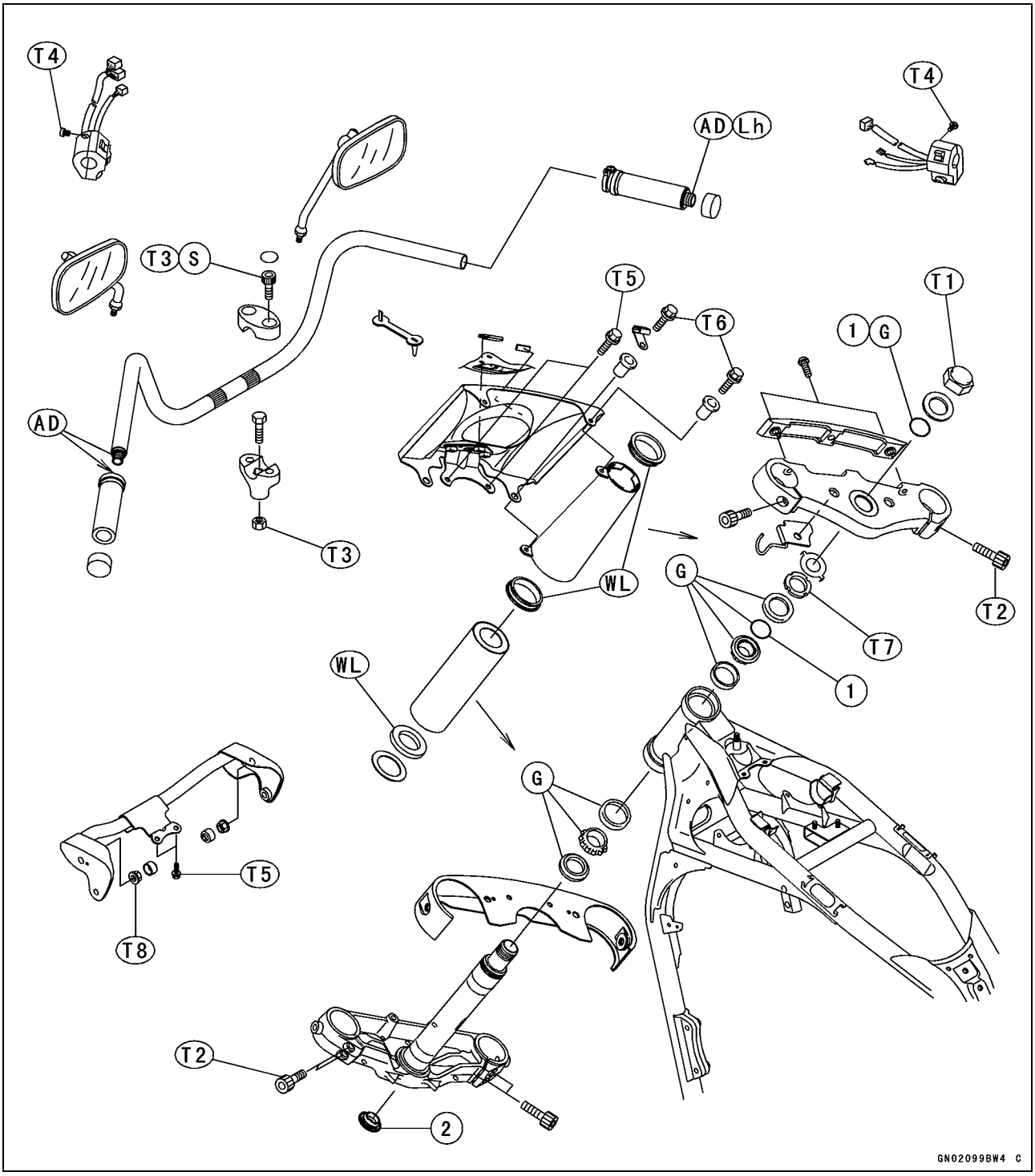

1. O-rings
2. Plug (VN1500-N4 ~)

T1: 54 N·m (5.5 kgf·m, 40 ft·lb) (VN1500-N1 ~ N3)
88 N·m (9.0 kgf·m, 65 ft·lb) (VN1500-N4 ~)
T2: 20 N·m (2.0 kgf·m, 14 ft·lb)
T3: 34 N·m (3.5 kgf·m, 25 ft·lb)
T4: 3.4 N·m (0.35 kgf·m, 30 in·lb)
T5: 7.4 N·m (0.75 kgf·m, 65 in·lb)
T6: 4.4 N·m (0.45 kgf·m, 39 in·lb)
T7: 4.9 N·m (0.50 kgf·m, 43 in·lb)
T8: 5.9 N·m (0.60 kgf·m, 52 in·lb)
AD: Apply adhesive agent.
G: Apply grease.
Lh: Left-hand Threads
S: Follow the specific tightening sequence.
WL: Apply a soap and water solution or rubber lubricant.

Downloaded from www.vulcanriders-sweden.org

Specifications

Special Tools - Head Pipe Outer Race Press Shaft: 57001-1075
Head Pipe Outer Race Driver: 57001-1077
Steering Stem Nut Wrench: 57001-1100
Head Pipe Outer Race Remover: 57001-1107
Jack: 57001-1238
Steering Stem Bearing Driver: 57001-1344
Steering Stem Bearing Driver Adapter: 57001-1345
Attachment Jack: 57001-1398

Downloaded from www.vulcanriders-sweden.org

Handlebar

Handlebar Removal

- Remove:
  Clutch Master Cylinder
  Left Handlebar Switch Housing
  Front Brake Master Cylinder
  Right Handlebar Switch Housing
  Throttle Grip
  Handlebar Holder Bolts [A]
- Remove the handlebar [B] from the stem head.

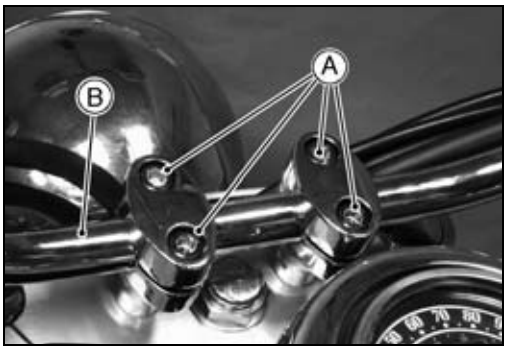

Handlebar Installation

- Set the handlebar to match its punched mark [A] to the lower mating surface [B] of the clamp rear part.

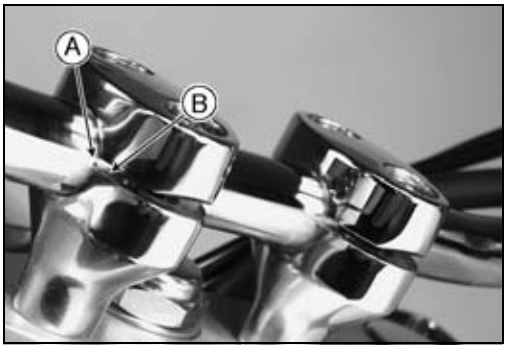

- Tighten the front holder bolts first, and then the rear holder bolts. There will be a gap [A] at the rear part of the holder after tightening.

  Torque - Handlebar Holder Bolts: 34 N·m (3.5 kgf·m, 25 ft·lb)

  Front [B]



- The front half of the right switch housing [A] has a small projection [B]. Fit the projection into the small hole [C] in the handlebar.

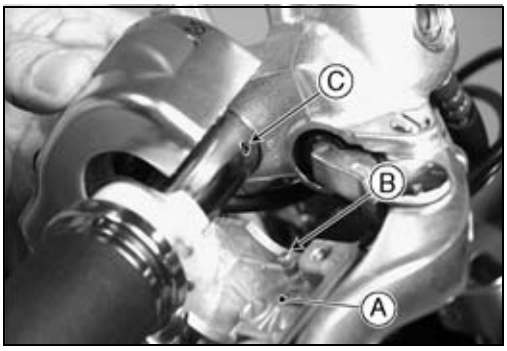

- Set the left switch housing [A] to match its mating surface [B] to the punched mark [C] of the handlebar (front view).
- Install the left handlebar switch housings.
- Tighten:

  Torque - Handlebar Switch Housing Screws: 3.4 N·m (0.35 kgf·m, 30 in·lb)

- Install:
  Clutch Master Cylinder (see Clutch chapter)
  Front Master Cylinder (see Brakes chapter)
- Check and adjust the rear view mirrors.

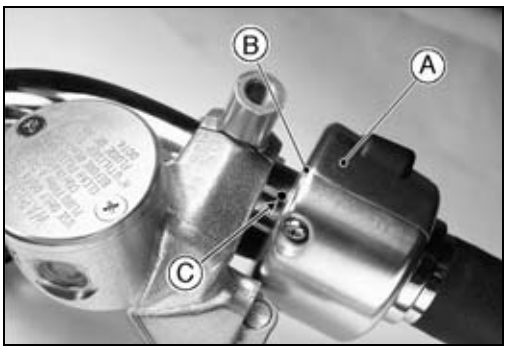

Downloaded from www.vulcanriders-sweden.org

Steering

Steering Inspection

● Check steering as follows.

○Use the jack [A], the attachment jack [B] under the frame pipe ribs [C], and a commercially available jack [D] under the engine [E] to lift the front wheel [F] off the ground.

Special Tools - Jack: 57001-1238
Attachment Jack: 57001-1398

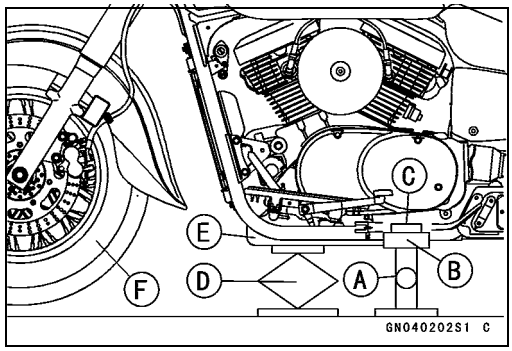

○With the front wheel pointing straight ahead, alternately tap each end of the handlebar. The front wheel should swing fully right and left from the force of gravity until the fork hits the stop.

★If the wheel binds or catches before the stop, the steering is too tight.

○Feel for steering looseness by pushing and pulling [A] the fork.

★If you feel looseness, the steering is too loose.



NOTE

○*The cables and wiring will have some effect on the motion of the fork which must be taken into account. Be sure the wires and cables are properly routed.*

○*The bearings must be in good condition and properly lubricated in order for any test to be valid.*

Steering Adjustment

★Adjust the steering if necessary.

● Unscrew the handlebar holder nuts [A] and take off the holder and handlebar [B] as a set.



● Loosen the front fork clamp bolts (upper) [A] on both sides and the stem head nut [B] to free the fork inner tubes from the steering stem.

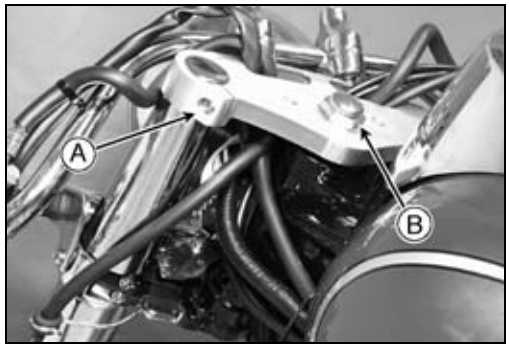

Downloaded from www.vulcanriders-sweden.org

Steering

- Adjust the stem nut [A] with the stem nut wrench [B] by tightening to the specified torque (left side view).

  Special Tool - Steering Stem Nut Wrench: 57001-1100

  Torque - Steering Stem Nut: 4.9 N·m (0.50 kgf·m, 43 in·lb)

- Tighten the following in the order listed.

  Torque - Front Fork Clamp Bolts (Upper): 20 N·m (2.0 kgf·m, 14 ft·lb)
  Steering Stem Head Nut:
  54 N·m (5.5 kgf·m, 40 ft·lb) (VN1500-N1 ~ N3)
  88 N·m (9.0 kgf·m, 65 ft·lb) (VN1500-N4 ~)

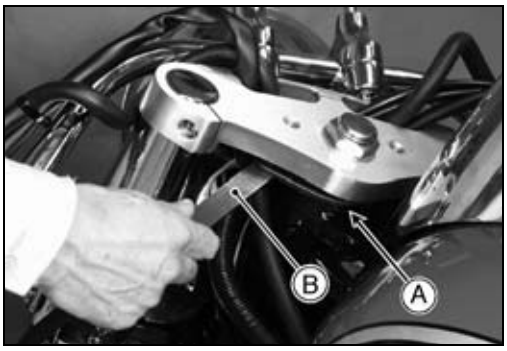

- Install the handlebar and holder.
- Tighten:

  Torque - Handlebar Holder Nuts: 34 N·m (3.5 kgf·m, 25 ft·lb)

○Run the throttle cables [A], brake hose [B], and clutch hose [C] as shown.
○Do not run the throttle cables into the strap.

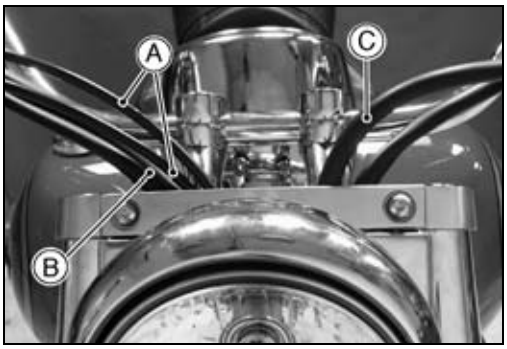

- Check and adjust the following items after installation.
  Steering (see Steering Check)
  Throttle Cables (see Fuel System chapter)
- Check the front brake effectiveness.

⚠ WARNING

Do not attempt to ride the motorcycle until a full brake lever is obtained by pumping the brake lever until the pads are against the disc. The brakes will not function on the first application of the lever if this is not done.

Downloaded from www.vulcanriders-sweden.org

Steering Stem

Removal

- Using the jack [A] and attachment jack [B] under the frame pipe ribs [C], and a commercially available jack [D] under the engine [E], lift the front wheel [F] **OFF** the ground until the rear wheel [G] touches the ground.

Special Tools - Jack: 57001-1238
Attachment Jack: 57001-1398

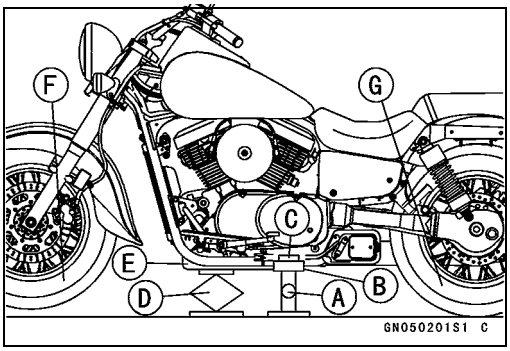

CAUTION

Be sure to put the rear wheel on the ground when removing the steering, or the motorcycle may fall over. The motorcycle could be damaged.

⚠ WARNING

Be sure to put the rear wheel on the ground when removing the steering, or the motorcycle may fall over. It could cause an accident and injury.

CAUTION

Cover the fuel tank with a towel to protect the painted surface.

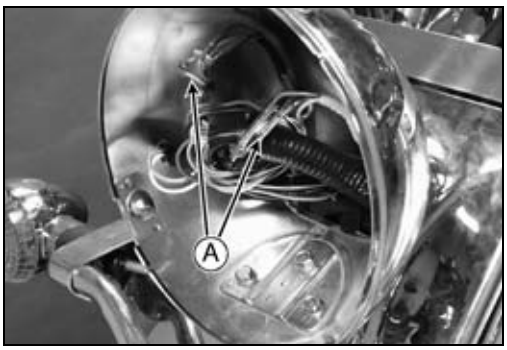

- Unscrew the headlight rim screws and open the headlight unit (see Electrical System chapter).
- Pull off the turn signal connectors [A] only.

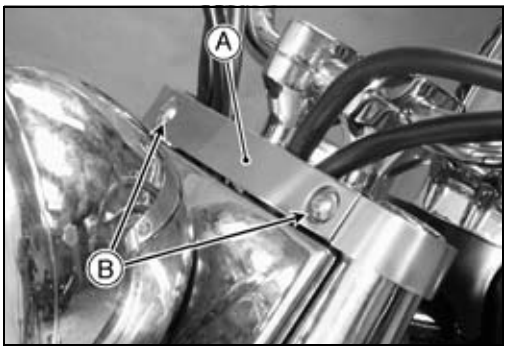

- Remove the cable holder [A] by unscrewing two bolts [B].



- Remove:
  Handlebar [A] (see Handlebar Removal)
  Stem Head Nut [B] (rear view)
  Washer [C]

Downloaded from www.vulcanriders-sweden.org

Steering Stem

● Remove:
O-ring [A] (rear view)
Front Fork Clamp Bolts (upper) [B]
Steering Stem Head [C]

NOTE

○*Be sure to remove the O-ring for removal of the steering stem head.*

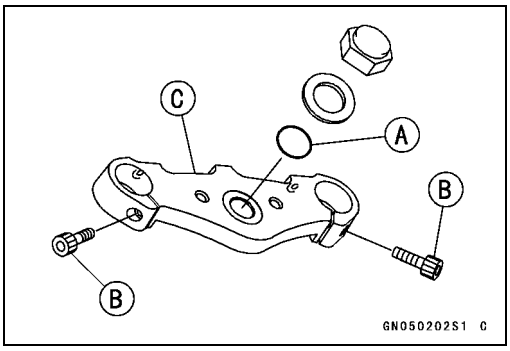

● Unscrew the upper bolts [A], and then the lower bolts [B], and take off the headlight body and headlight cover [C] as a set.
● Pull both upper fork covers [D] up and remove them.
● Pull the connectors and leads out of the headlight body.

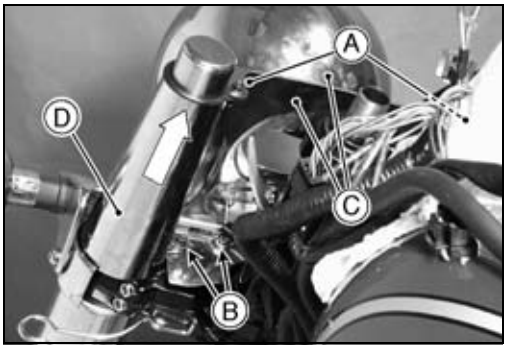

● Remove the two bolts [A] and take off the turn signal light holder [B].

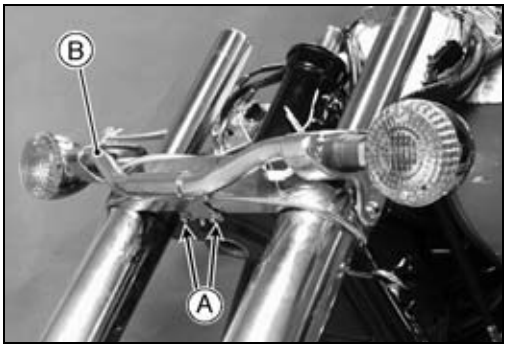

● Remove:
Front Wheel (see Wheels/Tires chapter)
Front Fender (see Frame chapter)
● Loosen the front fork clamp bolts (lower) [A] and remove the fork legs [B].
○With a twisting motion [C], work the fork leg down out.

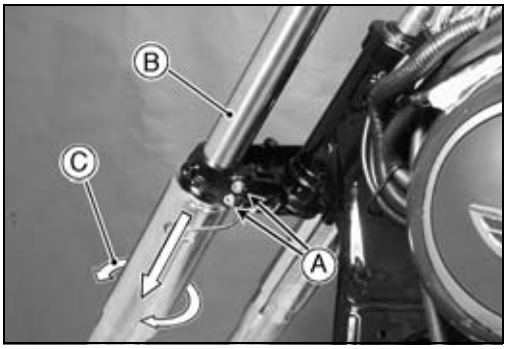

● Remove:
Claw Washer [A]
Steering Stem Nut [B]
Stem Cap [C]
O-ring [D]

NOTE

○*Be sure to remove the O-ring for removal of the steering stem.*

● Pull out the steering stem [E] from the bottom.

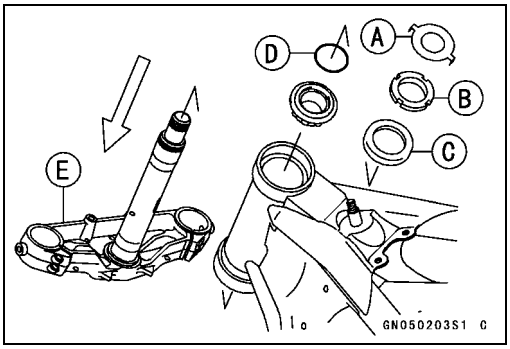

Downloaded from www.vulcanriders-sweden.org

Steering Stem

Installation

● Install:
Steering Stem [A]
Bearings [B]
New O-ring [C] (I.D. 34.5 × ϕ2 mm)
Stem Cap [D]
Stem Nut
Claw Washer

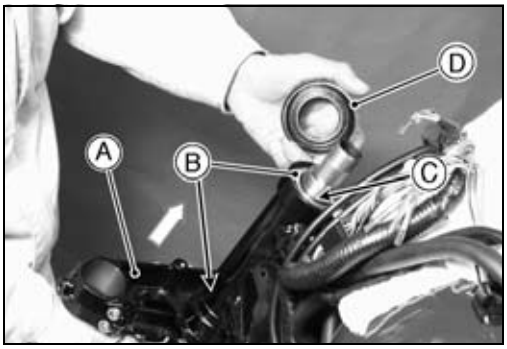

● Install the fork leg [A] and push [B] it up tightly against the stem bottom.
● Temporarily tighten the front fork clamp bolts (lower) [C].

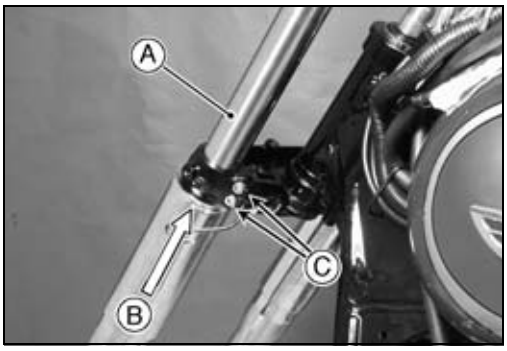

● Install:
Lower Fork Cover [A]
Upper Fork Covers [B]
○Apply a soap and water solution or rubber lubricant to the rubber dampers [C] and install the upper fork covers.
○The right and left upper fork covers are the same parts.
● Install the headlight cover and headlight body [D], four well nuts [E], and two clamps [F].
● Tighten:

Torque - Upper Fork Cover Bolts (ϕ5) [G]: 4.4 N·m (0.45 kgf·m, 39 in·lb)
Headlight Cover Bolts (ϕ6) [H]: 7.4 N·m (0.75 kgf·m, 65 in·lb)

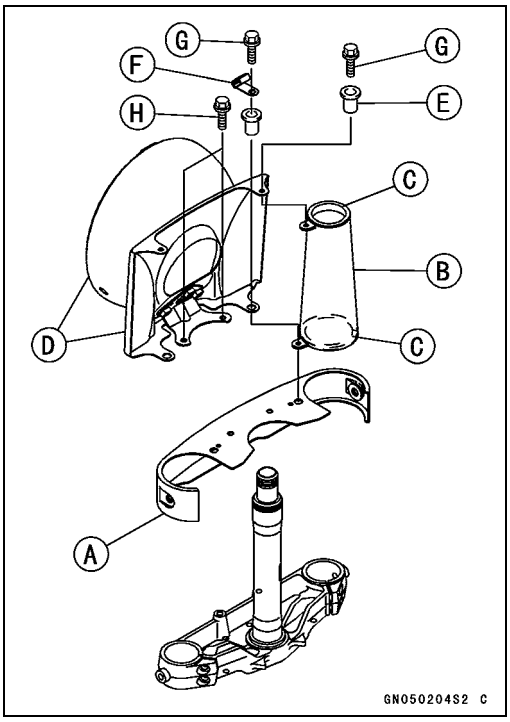

● Install the turn signal light holder [B].
● Tighten:

Torque - Turn Signal Light Holder Bolts [A]: 7.4 N·m (0.75 kgf·m, 65 in·lb)

● Join the connectors in the headlight body and install the headlight unit.
○Connect the turn signal connectors according to the Wiring Diagram for each model.

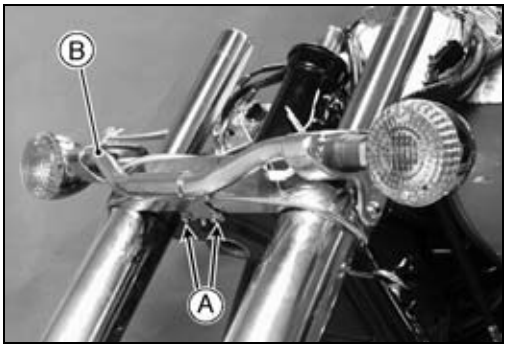

Downloaded from www.vulcanriders-sweden.org

Steering Stem

● Install:
Steering Stem Head
O-ring, Washer, and Stem Head Nut
● Temporarily tighten the front fork clamp bolts (upper).
○Check that the top end [A] of the inner tube is **0 ~ 0.5 mm (0 ~ 0.02 in.)** [B] lower than the upper surface [C] of the steering stem head. Otherwise reinstall the fork leg.
Front [D]
● Adjust the stem nut with the stem nut wrench by tightening to the specified torque (see Steering Adjustment).

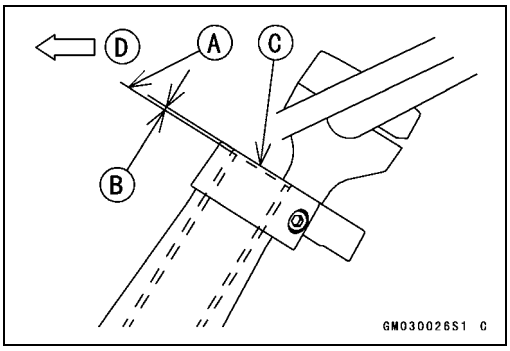

Special Tool - Steering Stem Nut Wrench: 57001-1100

Torque - Steering Stem Nut: 4.9 N·m (0.50 kgf·m, 43 in·lb)

○Tighten the front fork clamp bolts (upper) and then the stem head nut, and finally the front fork clamp bolts (lower).

Torque - Front Fork Clamp Bolts (Upper): 20 N·m (2.0 kgf·m, 14 ft·lb)
Steering Stem Head Nut:
54 N·m (5.5 kgf·m, 40 ft·lb) (VN1500-N1 ~ N3)
88 N·m (9.0 kgf·m, 65 ft·lb) (VN1500-N4 ~)
Front Fork Clamp Bolts (Lower): 20 N·m (2.0 kgf·m, 14 ft·lb)

NOTE

○*Tighten the two clamp bolts alternately two times to ensure even tightening torque.*

● Install the removed parts.
Front Fender
Front Wheel (see Wheels/Tires chapter)
Handlebar and Handlebar Holders (see Steering Adjustment)
● Check and adjust the following items after installation.
Steering (see Steering Check)
Throttle Cables (see Fuel System chapter)
Headlight Aim
● Check the front brake effectiveness.

⚠ WARNING

Do not attempt to ride the motorcycle until a full brake lever is obtained by pumping the brake lever until the pads are against the disc. The brakes will not function on the first application of the lever if this is not done.

Steering Stem Warp Inspection

● Whenever the steering stem is removed, or if the steering cannot be adjusted for smooth action, check the steering stem for straightness.
★If the steering stem [A] is bent, replace the steering stem.

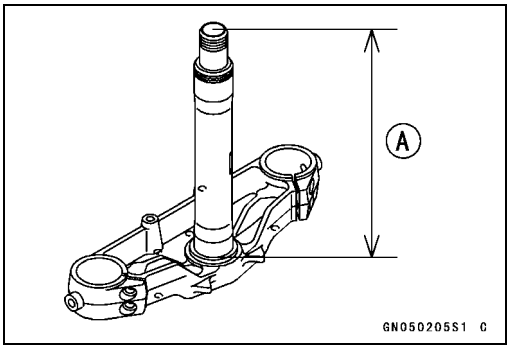

Downloaded from www.vulcanriders-sweden.org

Steering Stem Bearing

Stem Bearing Removal

- Remove the steering stem (see Steering Stem Removal).
- Drive out the bearing outer races from the head pipe.

Special Tool - Head Pipe Outer Race Remover: 57001 -1107 [A]

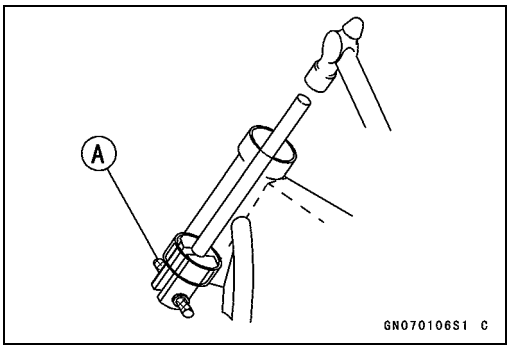

NOTE

○*If either steering stem bearing is damaged, it is recommended that both upper and lower bearings (including outer races) be replaced with new ones.*

- Remove the lower inner race [A] which is pressed onto the steering stem, using a chisel.

Grease Seal [B]
Tap here [C]

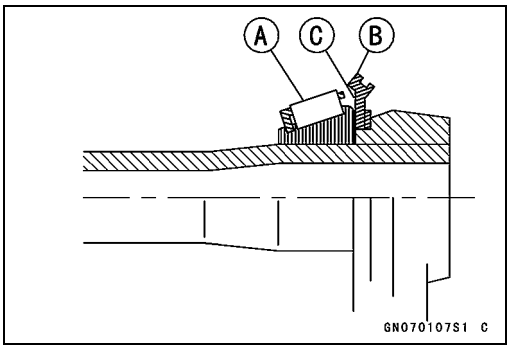

Stem Bearing Installation

- Replace the bearing outer races with new ones.
- Apply grease to the outer races, and drive them into the head pipe at the same time.

Special Tools - Head Pipe Outer Race Press Shaft: 57001 -1075 [A]
Head Pipe Outer Race Drivers: 57001-1077 [B]

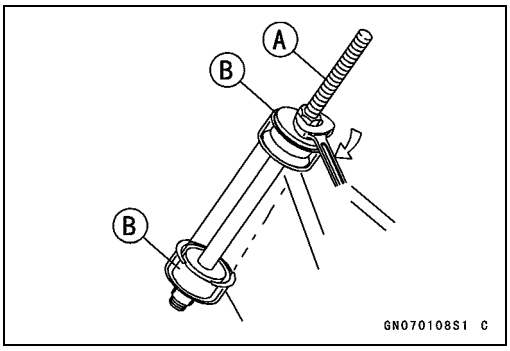

- Replace the stem bearing inner races with new ones.
- Apply grease to the lower inner race [A], and drive it onto the stem.

Special Tools - Steering Stem Bearing Driver [B]: 57001 -1344
Steering Stem Bearing Driver Adapter [C]: 57001-1345

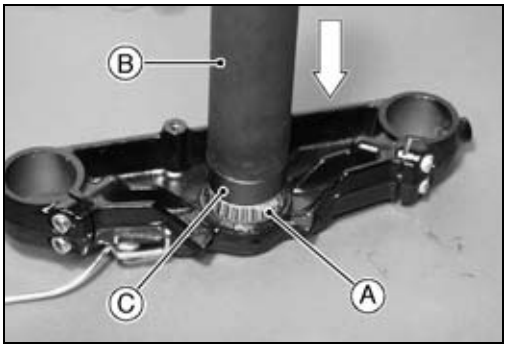

- Install the steering stem.

NOTE

○*Do not install the O-rings yet.*

- Settle the bearings in place as follows:

○Tighten the stem nut to **78 N·m (8.0 kgf·m, 58 ft·lb)** of torque. (To tighten the steering stem nut to the specified torque, hook the wrench on the stem nut, and pull the wrench at the hole by **440 N (45 kgf, 99 lb)** force in the direction shown.)

Special Tool - Steering Stem Nut Wrench: 57001-1100 [A]

Force [B]

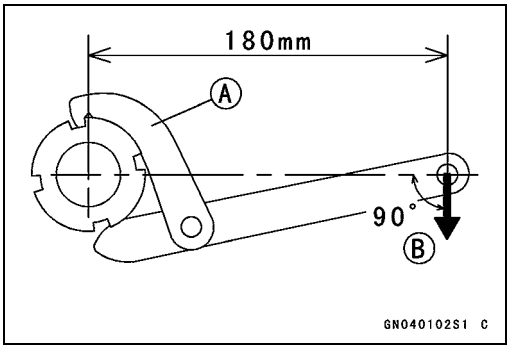

Downloaded from www.vulcanriders-sweden.org

Steering Stem Bearing

○Check that there is no play and the steering stem turns smoothly without rattles. If not, the steering stem bearings may be damaged and must be replaced.
- Remove the stem nut.
- Install the O-rings and adjust the steering (see Steering Adjustment).
- Tighten:

Torque - Steering Stem Nut: 4.9 N·m (0.50 kgf·m, 43 in·lb)

Stem Bearing Lubrication

In accordance with the Periodic Maintenance Chart, lubricate the steering stem bearings.
- Remove the steering stem.
- Using a high-flash point solvent, wash the upper and lower tapered roller bearing in the cages, and wipe the upper and lower outer races, which are press-fitted into the frame head pipe, clean of grease and dirt.
- Visually check the outer races and the rollers.

★If the rollers or races are worn, or if either race is dented, replace both races and all the roller bearing as a set.
- Pack the upper and lower tapered roller bearings [A] in the cages with grease, and apply a light coat of grease to the upper and lower outer races.
- Install the steering stem, and adjust the steering.

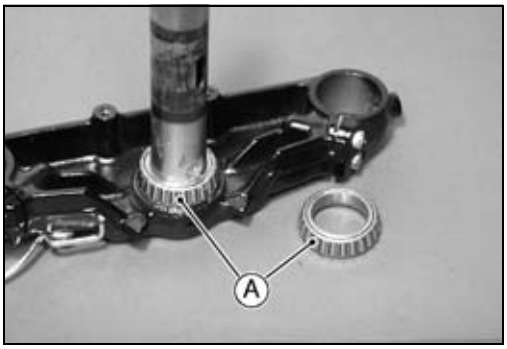

Stem Cap Deterioration, Damage Inspection

★Replace the stem cap [A] if its grease seal shows damage.



Downloaded from www.vulcanriders-sweden.org

Frame

Table of Contents

Exploded View 14-2
Seats 14-4
  Front Seat Removal 14-4
  Front Seat Installation 14-4
  Rear Seat Removal 14-4
  Rear Seat Installation 14-4
Side Covers 14-5
  Left Side Cover Removal 14-5
  Left Side Cover Installation 14-5
  Right Side Cover Removal 14-5
  Right Side Cover Installation 14-6
Fenders 14-7
  Front Fender Removal 14-7
  Rear Fender Removal 14-7
Tool Box 14-8
  Removal 14-8
Battery Case 14-9
  Battery Case Removal 14-9
Downtube 14-10
  Removal 14-10
  Installation 14-10
Front Footboard, Sidestand 14-11
  Footboard Removal 14-11
  Footboard Disassembly 14-11
  Sidestand Installation 14-11
Frame 14-12
  Frame Inspection 14-12

Downloaded from www.vulcanriders-sweden.org

Exploded View

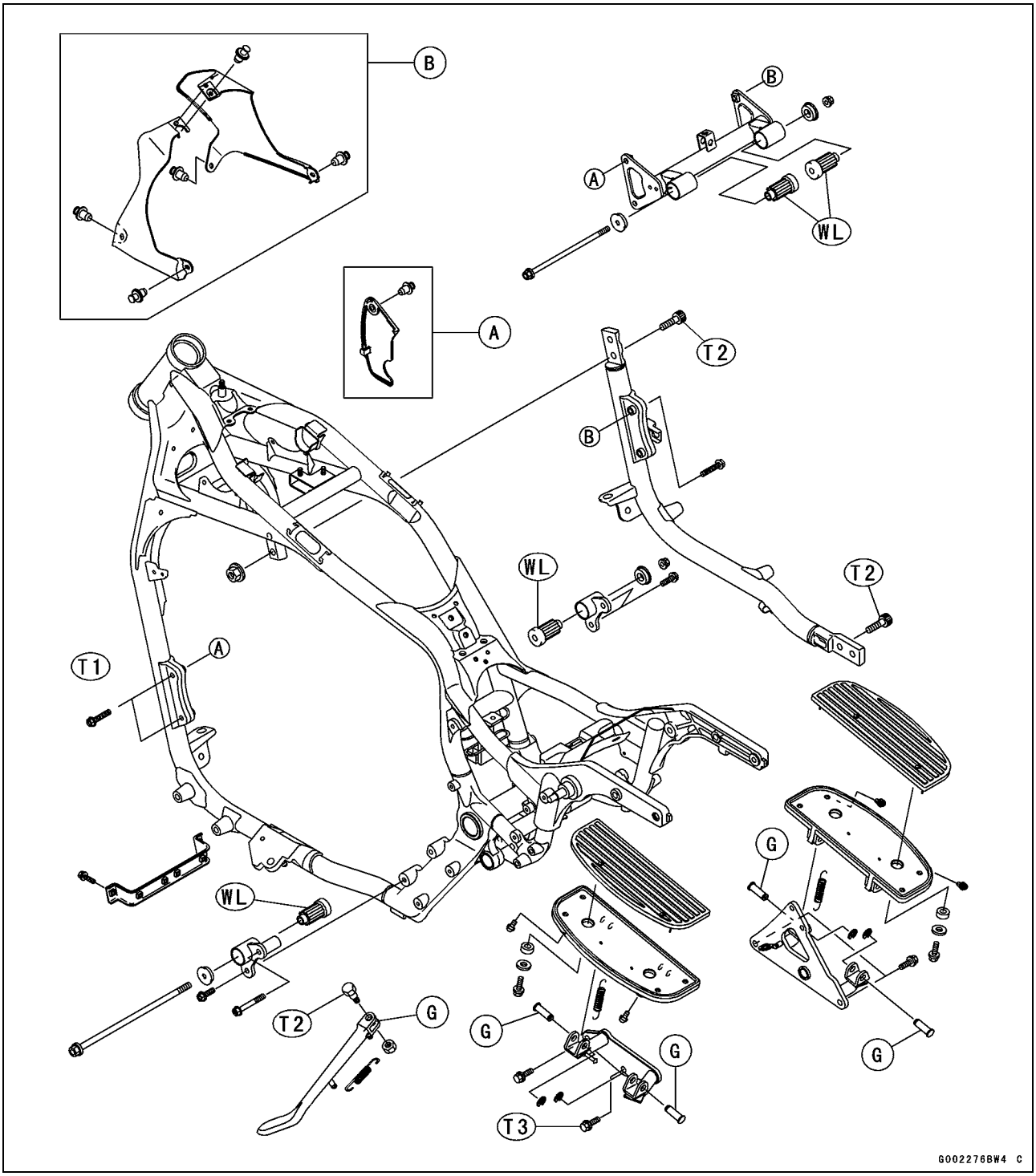

T1: 25 N·m (2.5 kgf·m, 18 in·lb)
T2: 44 N·m (4.5 kgf·m, 32 ft·lb)
T3: 34 N·m (3.5 kgf·m, 25 ft·lb)
G: Apply grease.
WL: Apply a soap and water solution or rubber lubricant.
A: VN1500-N1 Model
B: VN1500-N1 ~ N2 Model ~

Downloaded from www.vulcanriders-sweden.org

Exploded View

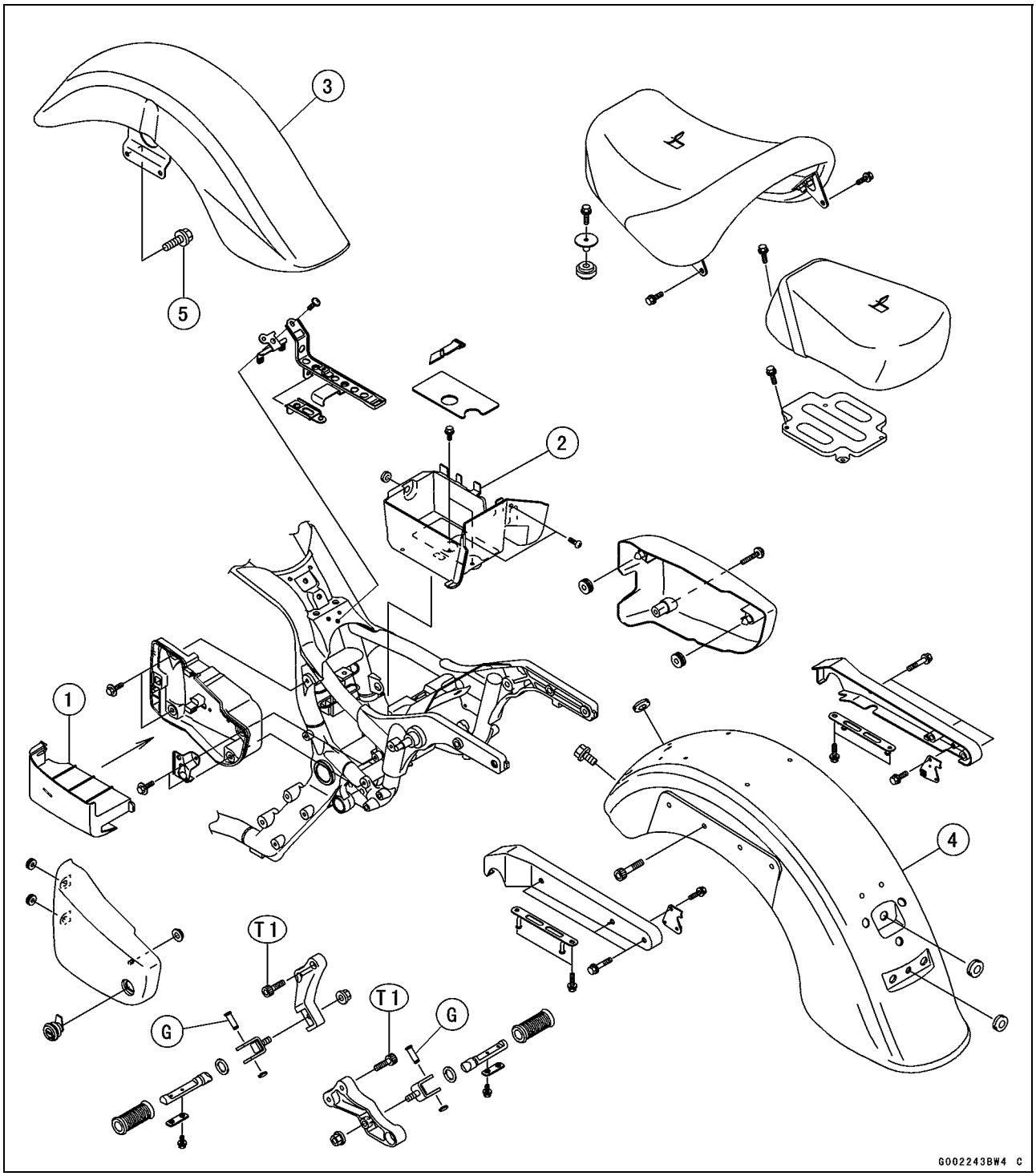

1. Tool Box
2. Battery Case
3. Front Fender
4. Rear Fender
5. Front Fender Mounting Bolts

T1: 20 N·m (2.0 kgf·m, 14 ft·lb)
G: Apply grease.

Downloaded from www.vulcanriders-sweden.org

Seats

Front Seat Removal

- Remove the front seat bolts [A] on both sides (left view).
- Pull the front seat [B] forward and remove it.

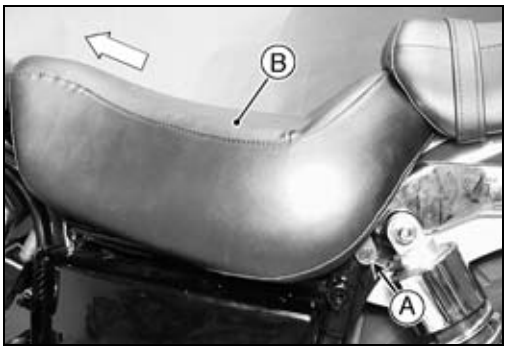

Front Seat Installation

- Insert the rear part [A] of the front seat under the rear seat, then slip the seat hook [B] under the washer [C].
- Tighten the front seat bolts.
  Front [D]

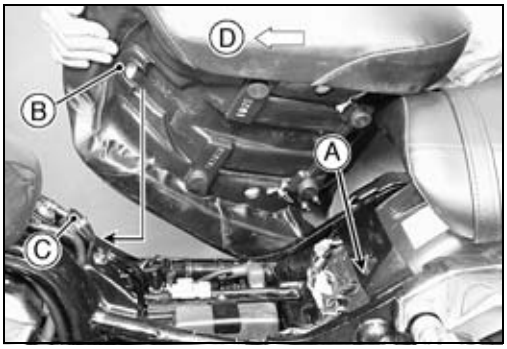

Rear Seat Removal

- Remove the front seat (see Front Seat Removal).
- Remove the rear seat bolt [A] and move the rear seat forward [B] and remove it (left view).

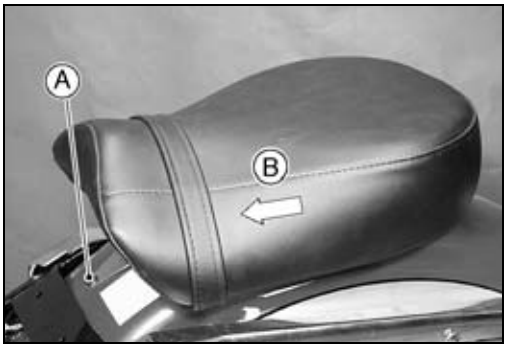

Rear Seat Installation

- Slip the hooks [A] of the rear seat into the grooves [B] of the seat bracket and move the seat backward [C].

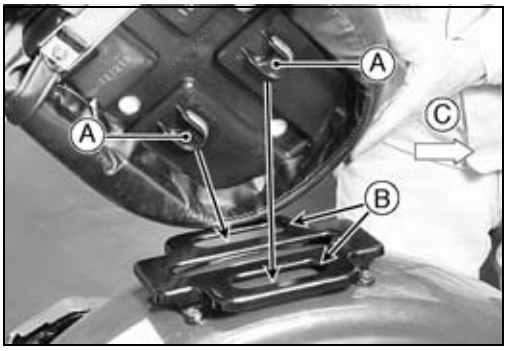

Downloaded from www.vulcanriders-sweden.org

Side Covers

Left Side Cover Removal

- Insert the ignition switch key [A] into the left side cover, and turn the key clockwise until the key slot is vertical [B].

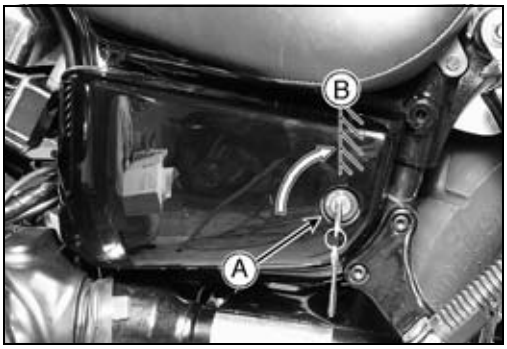

- Pull [B] the rear part of the left side cover towards you, push [A] the left side cover slightly forward, and remove it.



Left Side Cover Installation

- Put the front stoppers [A] into the grommets [B] first, then put the rear stopper into the grommet.

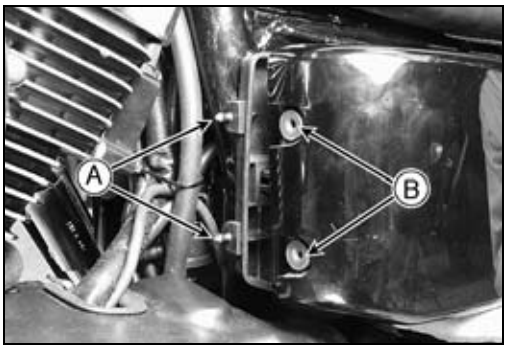

- Turn the ignition switch key [A] counterclockwise until the key slot is horizontal [B] to secure the left side cover.

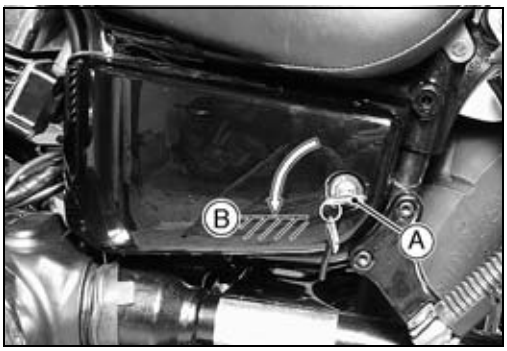

Right Side Cover Removal

- Remove the screw [A].

CAUTION

Be careful not to scratch the right side cover surface with the rear exhaust pipe [B] during removal or installation.

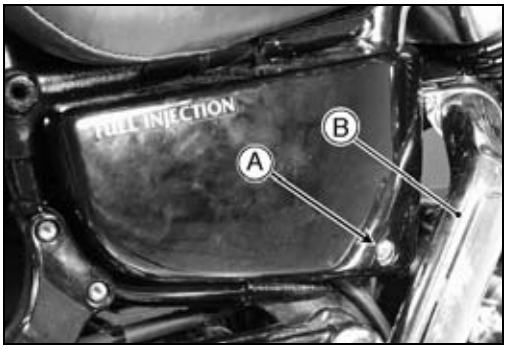

- Cover the rear exhaust pipe with a shop towel and pull the right side cover evenly outward to clear the stoppers.
- Remove the right side cover.

Downloaded from www.vulcanriders-sweden.org

Side Covers

Right Side Cover Installation

- Run the reserve tank hose [A] and the reserve tank overflow hose [B] as shown.
  Into a Clamp [C] on Engine Bottom

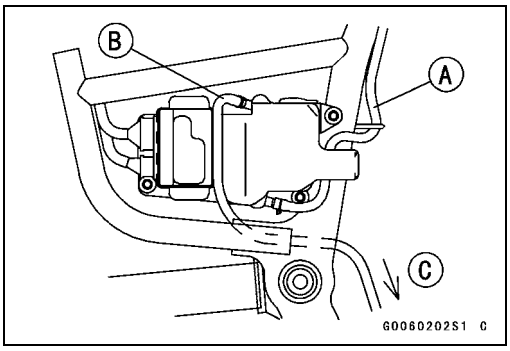

Downloaded from www.vulcanriders-sweden.org

Fenders

Front Fender Removal

CAUTION
Be careful not to scratch the painted surface during removal or installation.

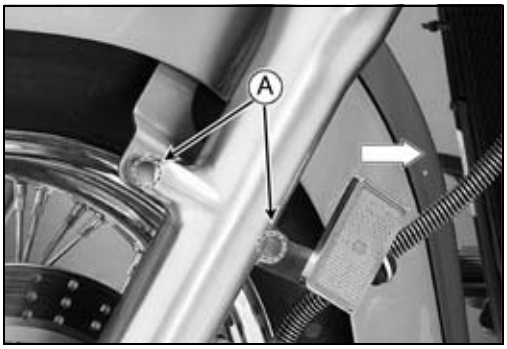

- Remove the mounting bolts [A] on both sides to separate the fender from the front fork (right side view).
- Move back the fender with the wheel installed and removed it.

Rear Fender Removal

CAUTION
Be careful not to scratch the painted surface during removal or installation.

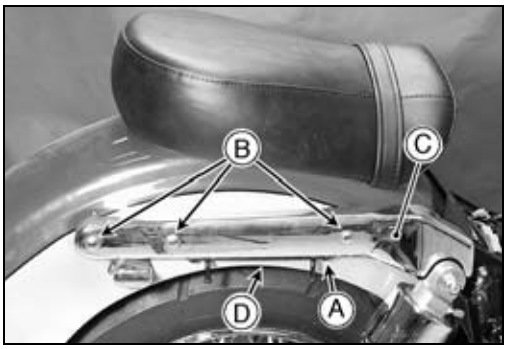

- Remove the front seat (see Front Seat Removal).
- Remove (on both sides):
  Front Hook Bolt [A]
  Rear Fender Stay Bolts [B]
- Remove both rear fender stays [C] along with the hook bracket [D].

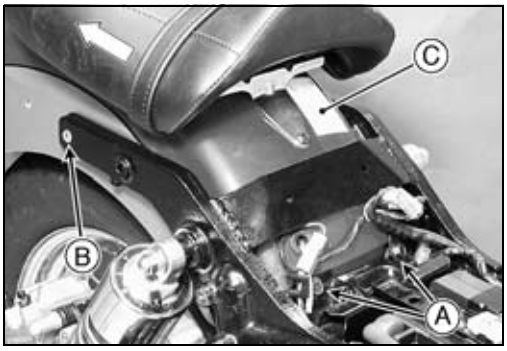

- Disconnect the rear turn signal and taillight lead connectors.
- Remove:
  Rear Fender Front Bolts [A]
  Rear Fender Allen Bolts [B]
- Remove the rear fender [C] rearward.

Downloaded from www.vulcanriders-sweden.org

Tool Box

Removal

- Remove the left side cover (see Left Side Cover Removal).
- Pinch the tab [A] and move the tool box [B] forward to clear the rear stopper [C].
- Pull the tool box out.

Front [D]

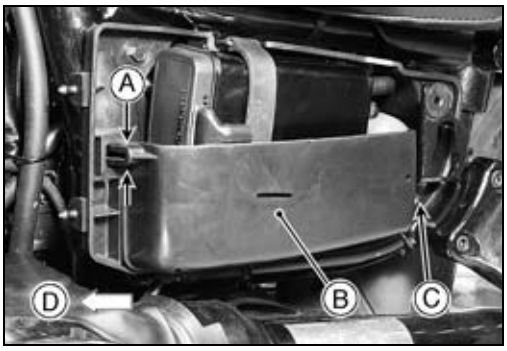

Downloaded from www.vulcanriders-sweden.org

Battery Case

Battery Case Removal

- Remove (left view):
  Front Seat (see Front Seat Removal)
  Screw [A] and Battery Holder [B]
  Battery [C] (see Electrical System chapter)
  ECU [D] (see Fuel System chapter)
  Rear Wheel (see Wheels/Tires chpater)

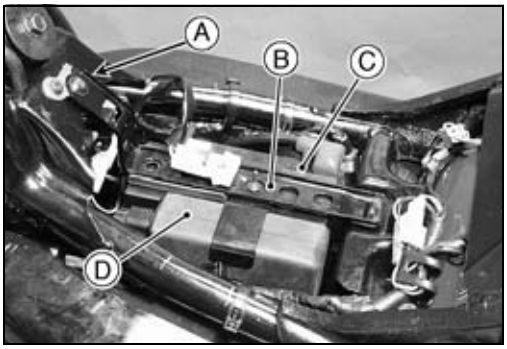

- Remove (right view):
  Right Side Cover (see Right Side Cover Removal)
  Junction Box [A] and Coolant Reserve Tank [B]
  Oil Pressure Light Delay Unit [C]
  DFI Main Relay [D]
  Turn Signal Control Unit [E]
  Starter Relay [F]

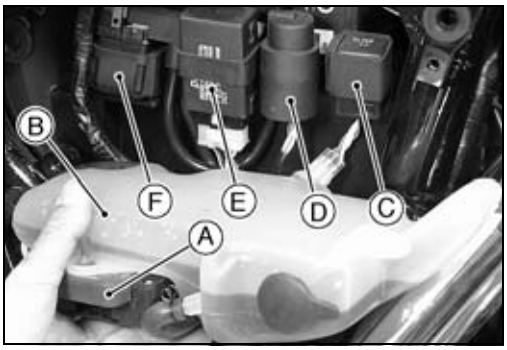

- Remove two bottom bolts [A].
  Front [B]

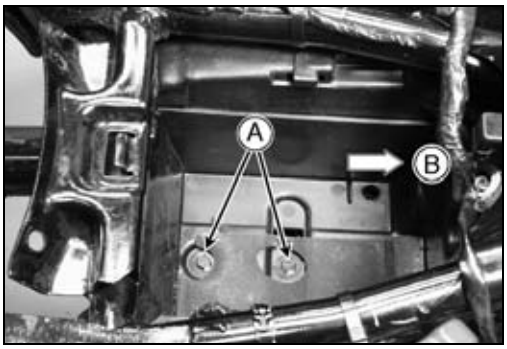

- Remove two rear screws [A] (rear view).



- Remove the battery case [A] towards the rear [B].

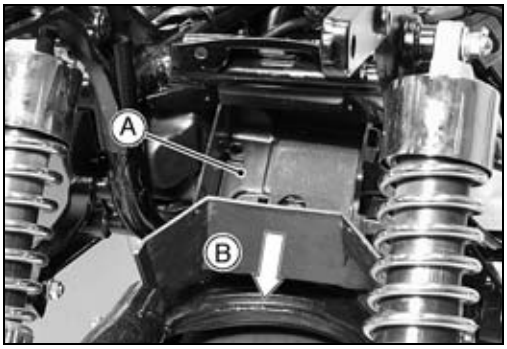

Downloaded from www.vulcanriders-sweden.org

Downtube

Removal

- Using the jack and the attachment jack, raise the rear wheel off the ground (see Wheels/Tires chapter).

Special Tools - Jack: 57001-1238
Attachment Jack: 57001-1398



- Remove:
  Brake Fluid Reservoir Cover
  Brake Fluid Reservoir [A]

- Remove the fuel tank (see Fuel System chapter) and pull off the rear brake light switch connector [C] (right side view).
- Remove the front exhaust pipe (see Engine Top End chapter).
  (for reference)
  Radiator Fan Connector [A]
  Front [B]

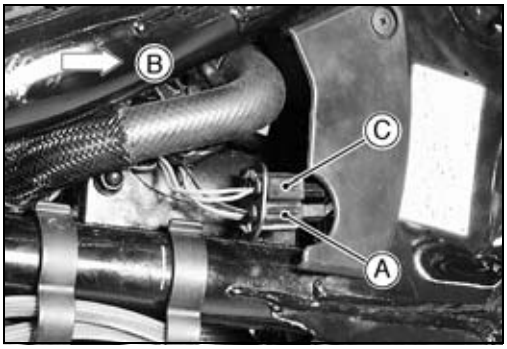

- Remove:
  Right Front Footboard [A] and Bolts [B]
- Support the engine with a commercially available stand [C].
- Remove:
  Right Regulator/Rectifier Bracket Bolt [D]
  Engine Mounting Bracket Bolts [E]
  Downtube Bolts [F]

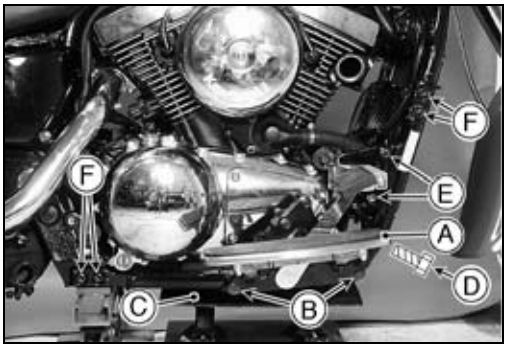

- Take off the downtube [A].

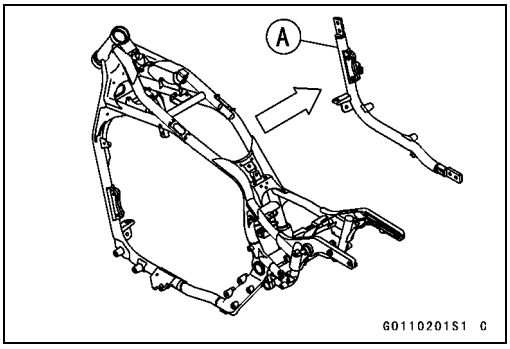

Installation

- Run the brake hose [A] inside the downtube [C] and clamp it [D].
  Clutch Hose [B]
  Strap [E]
  Front [F]
- Tighten:

Torque - Downtube Bolts: 44 N·m (4.5 kgf·m, 32 ft·lb)
Engine Mounting Bracket Bolts: 25 N·m (2.5 kgf·m, 18 ft·lb)
Front Footboard Bracket Bolts: 34 N·m (3.5 kgf·m, 25 ft·lb)

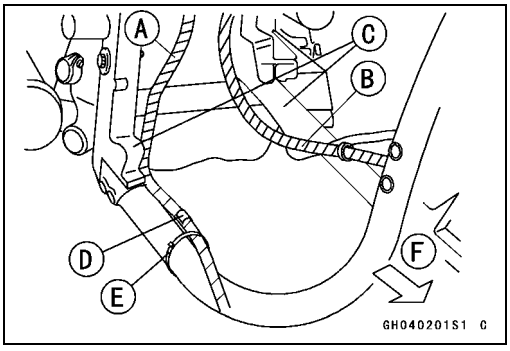

Downloaded from www.vulcanriders-sweden.org

Front Footboard, Sidestand

Footboard Removal

○The left front footboard is removed during shift pedal removal (see Crankshfaft/Transmission chapter).

○The right front footboard is removed during brake pedal removal (see Brakes chapter).

Footboard Disassembly

- Remove the front footboard.
- Remove:
  Footboard Spring [A]
  Circlips [B]
  Pins [C]

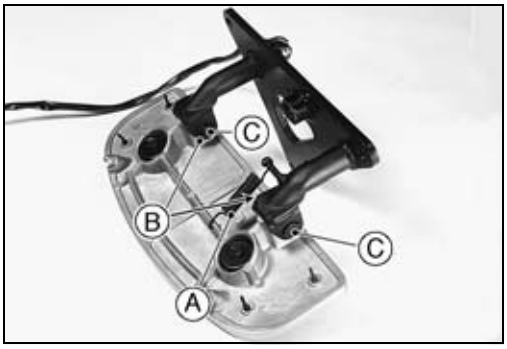

Sidestand Installation

- Tighten:

  Torque - Sidestand Nut: 44 N·m (4.5 kgf·m, 32 ft·lb)

- Install the sidestand spring [A], noting the direction of the hooks [B].

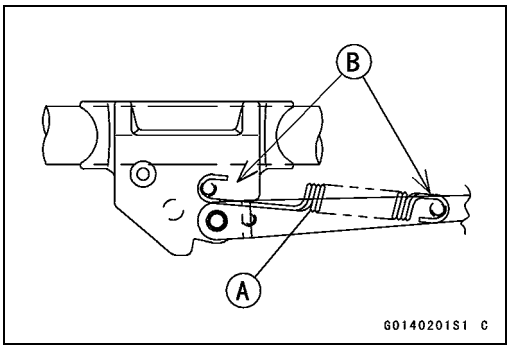

Downloaded from www.vulcanriders-sweden.org

Frame

Frame Inspection

- Visually inspect the frame [A] for cracks, dents, bending, or warp.

★If there is any damage to the frame, replace it.

⚠ WARNING

A repaired frame may fail in use, possibly causing an accident. If the frame is bent, dented, cracked, or warped, replace it.

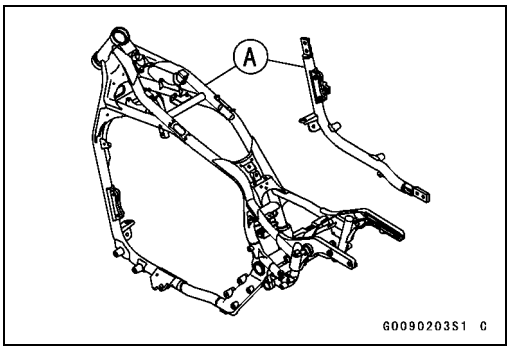

Downloaded from www.vulcanriders-sweden.org

Electrical System

Table of Contents

Electrical Parts Location 15-4
VN1500-N1 ~ N2 Wiring Diagram (Canada, and U.S.) 15-6
VN1500-N3 ~ Wiring Diagram (Canada, and U.S.) 15-8
VN1500-N Wiring Diagram (Except for Australia, Canada, and U.S.) 15-10
VN1500-N Wiring Diagram (Australia) 15-12
Exploded View 15-14
Specifications 15-20
Servicing Precautions 15-22
Electrical Wiring 15-24
  Wiring Inspection 15-24
Battery 15-25
  Battery Removal 15-25
  Battery Installation 15-25
  Electrolyte Filling 15-26
  Initial Charge 15-27
  Precautions 15-28
  Interchange 15-28
  Charging Condition Inspection 15-29
  Refreshing Charge 15-29
Charging System 15-31
  Alternator Outer Cover Removal 15-31
  Alternator Outer Cover Installation 15-31
  Alternator Cover Removal/Installation 15-31
  Alternator Cover Assembly 15-32
  Alternator Inner Cover Removal 15-32
  Alternator Inner Cover Installation 15-33
  Alternator Rotor Removal 15-33
  Alternator Rotor Installation 15-33
  Alternator Outside Stator Removal 15-33
  Alternator Outside Stator Installation 15-34
  Alternator Inside Stator Removal 15-35
  Alternator Inside Stator Installation 15-35
  Charging Voltage Inspection 15-36
  Alternator Inspection 15-36
  Regulator/Rectifier Removal 15-37
  Rectifier Inspection 15-39
  Regulator Inspection 15-39
Ignition System 15-42
  Ignition Coil Removal 15-44
  Ignition Coil Installation 15-45
  Ignition Coil Inspection 15-45
  Spark Plug Removal 15-46
  Spark Plug Installation 15-46
  Spark Plug Cleaning/Inspection 15-46
  Ignition Coil Primary Peak Voltage 15-46
  Ignition Timing Inspection 15-48

Downloaded from www.vulcanriders-sweden.org

Pickup Coil Removal 15-48
Pickup Coil Installation 15-48
Pickup Coil Inspection 15-49
IC Igniter Inspection 15-50
Starter Motor 15-52
Removal 15-52
Installation 15-52
Disassembly 15-53
Assembly 15-54
Brush Inspection 15-55
Commutator Cleaning and Inspection 15-55
Armature Inspection 15-55
Brush Wire Inspection 15-56
Brush Plate and Terminal Bolt Inspection 15-56
Starter Relay Inspection 15-56
Lighting System 15-58
Headlight Beam Horizontal Adjustment 15-58
Headlight Beam Vertical Adjustment 15-58
Headlight Bulb Replacement 15-58
Headlight Body Removal 15-59
Tail/Brake Light Bulb Replacement 15-60
Automatic Turn Signal Canceling System 15-62
Wiring Inspection 15-63
Distance Sensor Inspection 15-63
Turn Signal Switch Inspection 15-64
Turn Signal Control Unit Inspection 15-65
Turn Signal Light Bulb Replacement 15-65
Radiator Fan System 15-67
Fan System Circuit Inspection 15-67
Fan Motor Inspection 15-67
Oil Pressure Warning System 15-68
Oil Pressure Light Delay Unit Removal 15-68
Oil Pressure Light Delay Unit Inspection 15-68
Meter, Gauge 15-70
Meter Unit Removal 15-70
Meter Unit Installation 15-70
Meter Unit Disassembly 15-70
Meter Unit Assembly 15-72
Meter Unit Inspection 15-72
Water Temperature Warning System Check 15-81
Fuel Gauge Operation Inspection 15-83
Switch and Sensors 15-85
Fuel Reserve Switch Inspection 15-85
Speed Sensor Removal 15-85
Speed Sensor Installation 15-85
Speed Sensor Inspection 15-86
Front Brake Light Switch Inspection (Periodic) 15-86
Rear Brake Light Switch Check/Adjustment (Periodic) 15-86
Radiator Fan Switch Removal 15-87
Radiator Fan Switch Installation 15-87
Radiator Fan Switch Inspection 15-87
Water Temperature Switch Removal 15-88
Water Temperature Switch Installation 15-88
Water Temperature Switch Inspection 15-88
Fuel Level Sensor Removal 15-89
Fuel Level Sensor Installation 15-89
Fuel Level Sensor Inspection 15-89

Downloaded from www.vulcanriders-sweden.org

Diode (Rectifier) Inspection 15-90
Junction Box 15-91
Junction Box Fuse Circuit Inspection 15-91
Starter Circuit/Headlight Relay Inspection 15-92
Diode Circuit Inspection 15-93
Fuse 15-95
Main Fuse Removal 15-95
Junction Box Fuse Removal 15-95
Fuse Installation 15-95
Fuse Inspection 15-95

Downloaded from www.vulcanriders-sweden.org

Electrical Parts Location

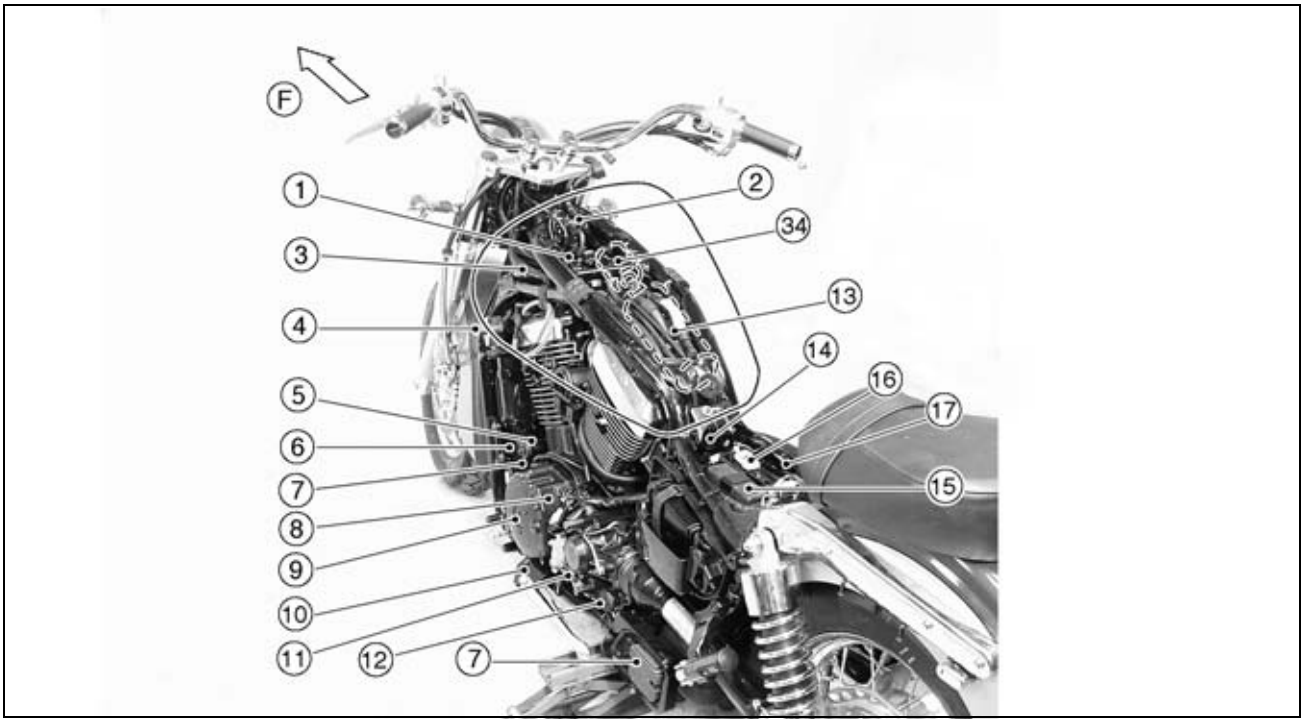

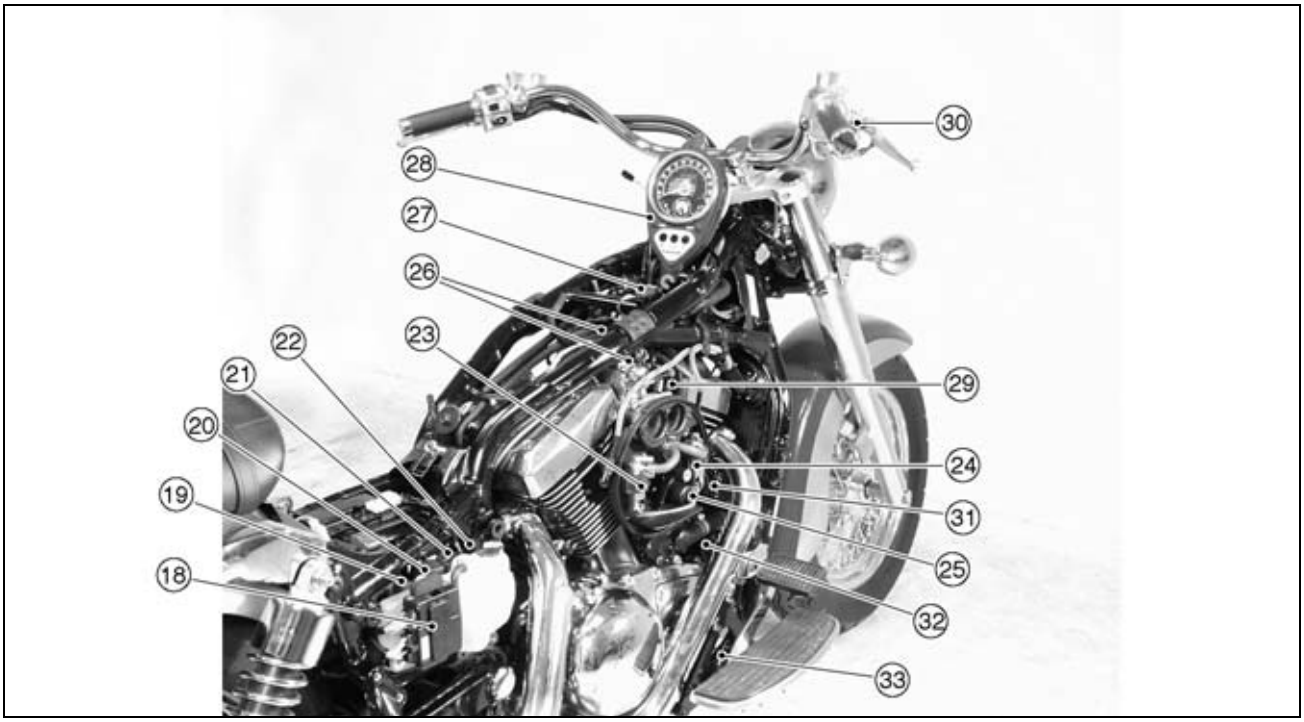

Downloaded from www.vulcanriders-sweden.org

Electrical Parts Location

1. Atmospheric Pressure Sensor (DFI)
2. Water Temperature Sensor (DFI)
3. Ignition Coils
4. Ignition Switch
5. Starter Motor
6. Water Temperature Switch
7. Regulator/Rectifier
8. Pickup Coils
9. Alternator
10. Sidestand Switch
11. Neutral Switch
12. Oil Pressure Switch
13. In-tank Fuel Pump (DFI)
14. Vehicle-down Sensor (DFI)
15. ECU (DFI, Electronic Control Unit)
16. DFI Fuse 15A
17. Battery
18. Junction Box
19. Starter Relay and Main Fuse 30A
20. Turn Signal Control Unit
21. DFI Main Relay
22. Oil Pressure Light Delay Unit
23. #1 ISC Valve (DFI, for Front Cylinder)
24. #2 ISC Valve (DFI, for Rear Cylinder)
25. Inlet Air Temperature Sensor (DFI)
26. Injectors (DFI)
27. Vacuum Sensor (DFI)
28. Meter Unit with FI Indicator LED Light (DFI)
29. Throttle Sensor (DFI)
30. Front Brake Light Switch
31. Radiator Fan
32. Radiator Fan Switch
33. Rear Brake Light Switch
34. In-tank Fuel Filter

DFI: DFI Parts (see Fuel System chapter)
F: Front

Downloaded from www.vulcanriders-sweden.org

VN1500-N1 ~ N2 Wiring Diagram (Canada, and U.S.)

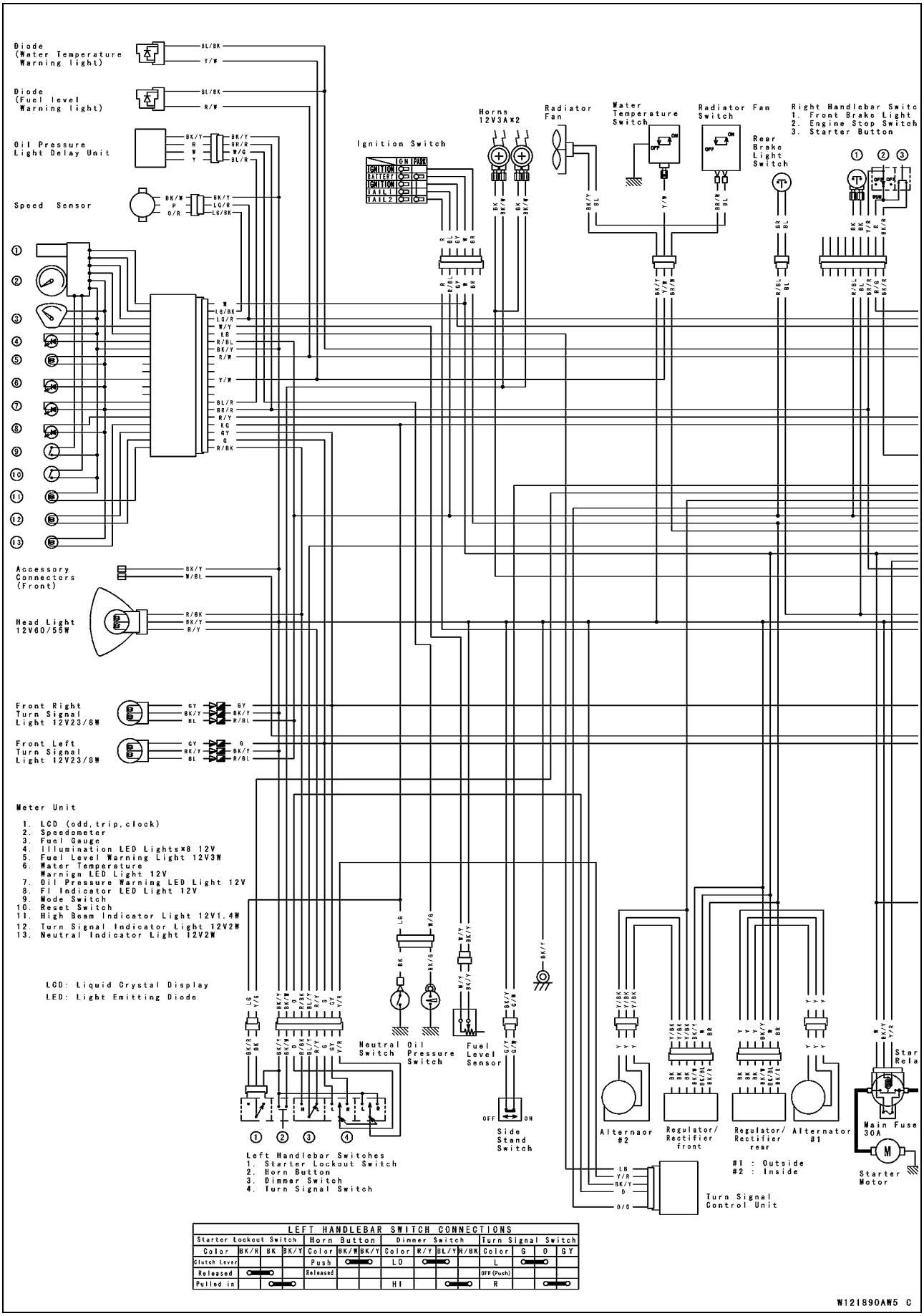

LEFT HANDLEBAR SWITCH CONNECTIONS

Starter Lockout Switch				Horn Button			Dimmer Switch				Turn Signal Switch			
Color	BK/R	BK	BK/Y	Color	BK/W	BK/Y	Color	R/Y	BL/Y	R/BK	Color	G	O	GY
Clutch Lever				Push			LO				L			
Released				Released							OFF (Push)			
Pulled in							HI				R			

W121890AW5 C

Downloaded from www.vulcanriders-sweden.org

VN1500-N1 ~ N2 Wiring Diagram (Canada, and U.S.)

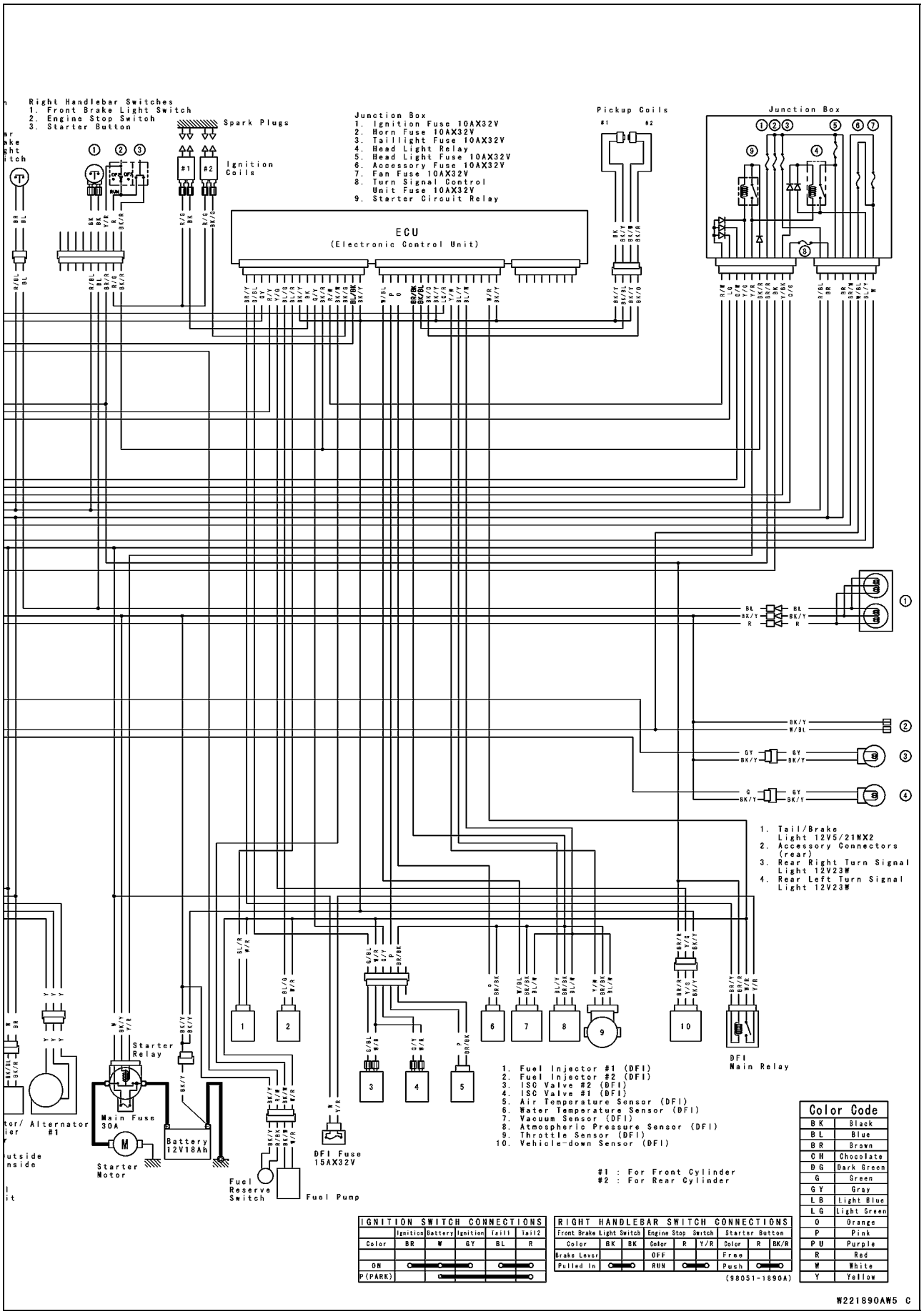

Downloaded from www.vulcanriders-sweden.org

VN1500-N3 ~ Wiring Diagram (Canada, and U.S.)

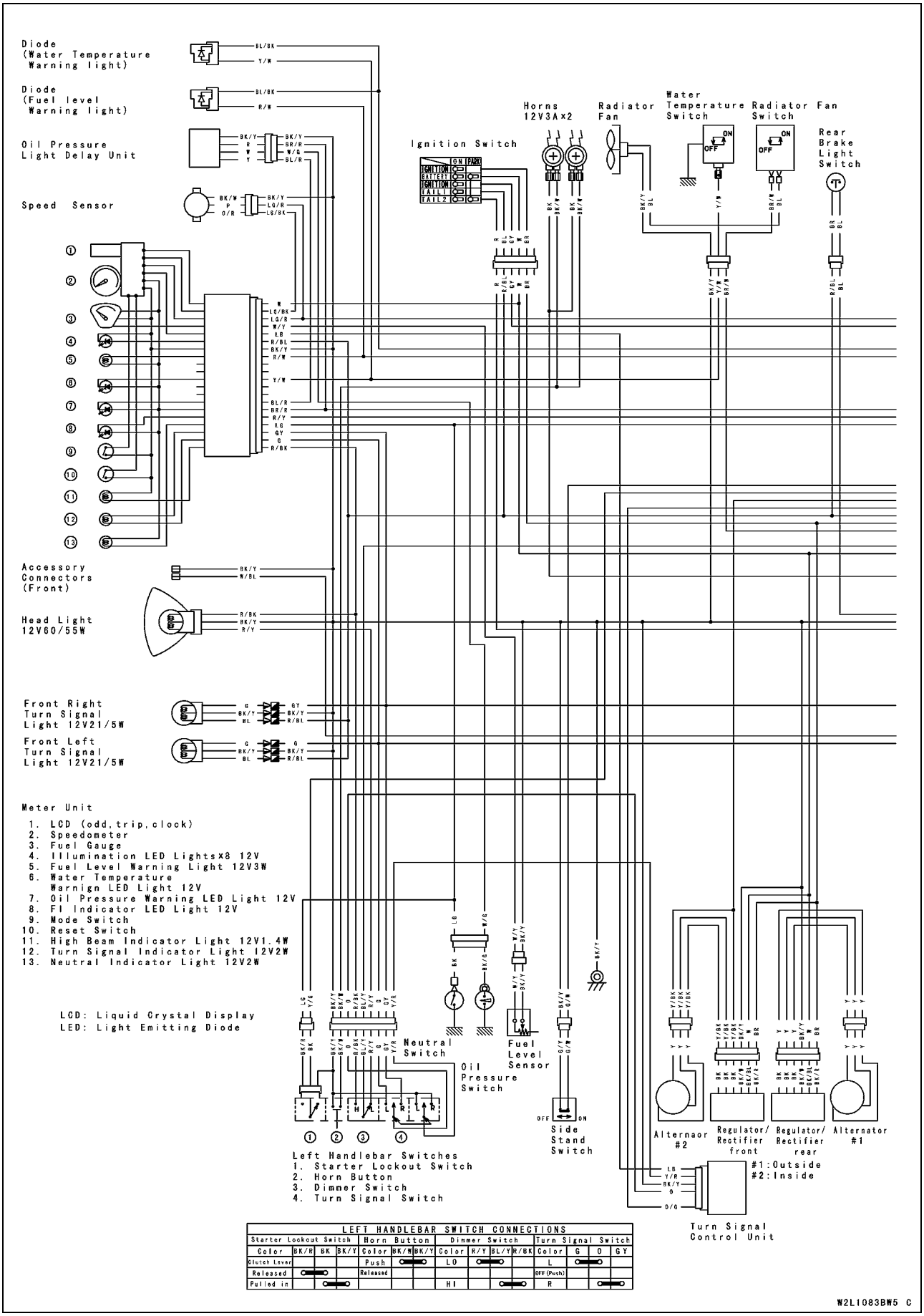

Downloaded from www.vulcanriders-sweden.org

VN1500-N3 ~ Wiring Diagram (Canada, and U.S.)

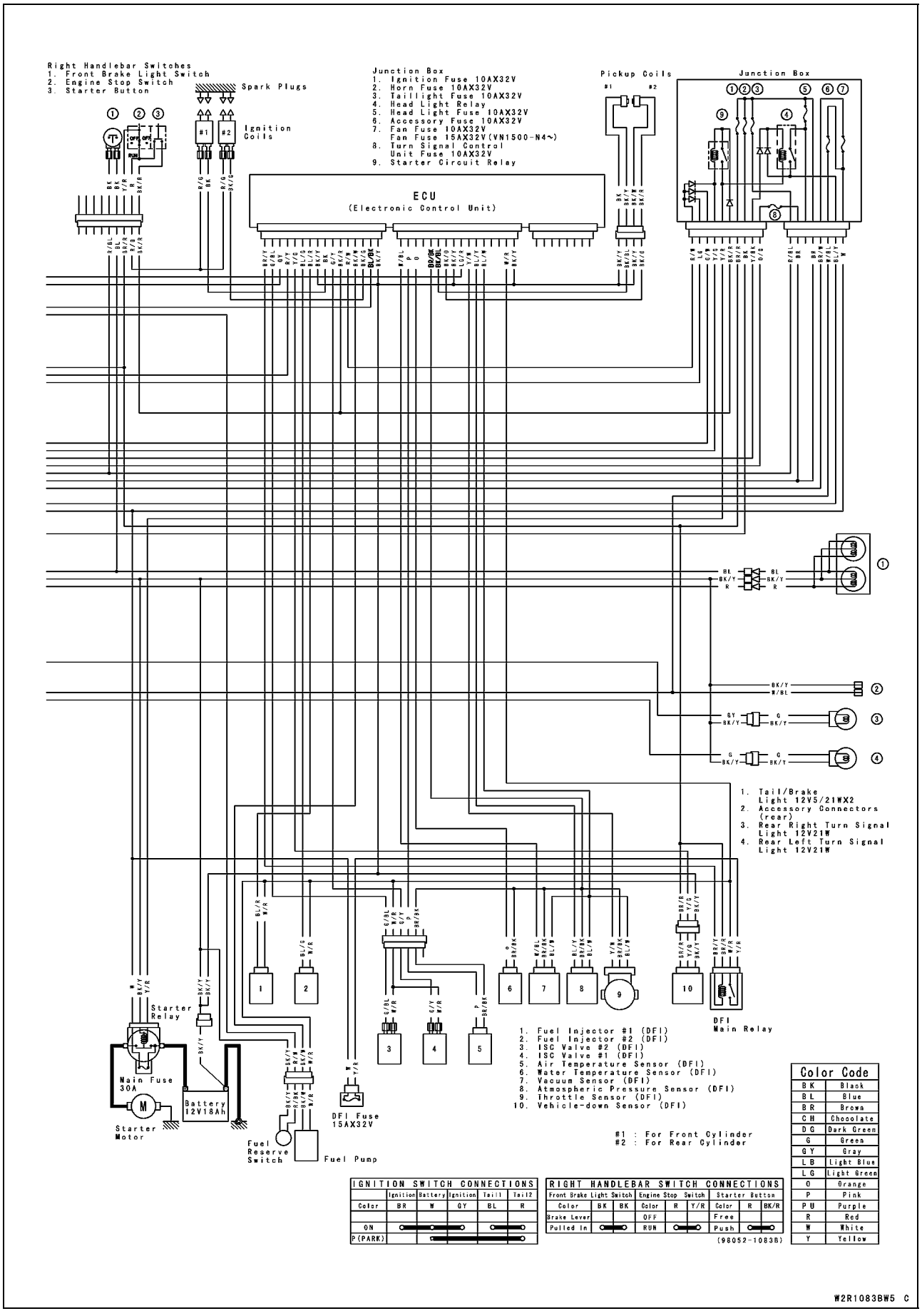

Downloaded from www.vulcanriders-sweden.org

VN1500-N Wiring Diagram (Except for Australia, Canada, and U.S.)

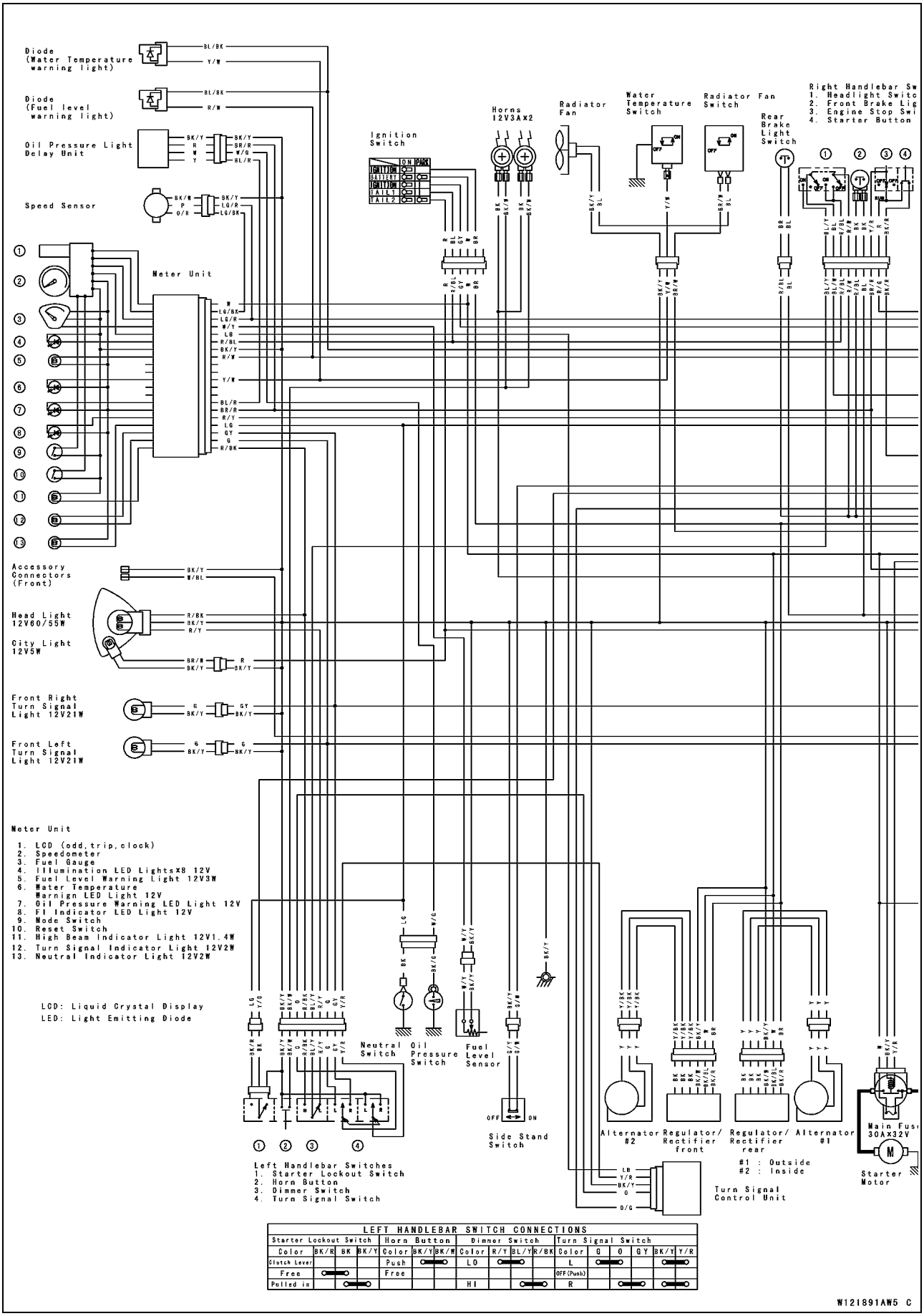

LEFT HANDLEBAR SWITCH CONNECTIONS

Starter Lockout Switch				Horn Button			Dimmer Switch				Turn Signal Switch					
Color	BK/R	BK	BK/Y	Color	BK/Y	BK/W	Color	R/Y	BL/Y	R/BK	Color	G	O	GY	BK/Y	Y/R
Clutch Lever				Push	●		LO	●			L	●				
Free		●		Free							OFF (Push)					
Pulled in		●					HI		●		R		●		●	

Downloaded from www.vulcanriders-sweden.org

VN1500-N Wiring Diagram (Except for Australia, Canada, and U.S.)

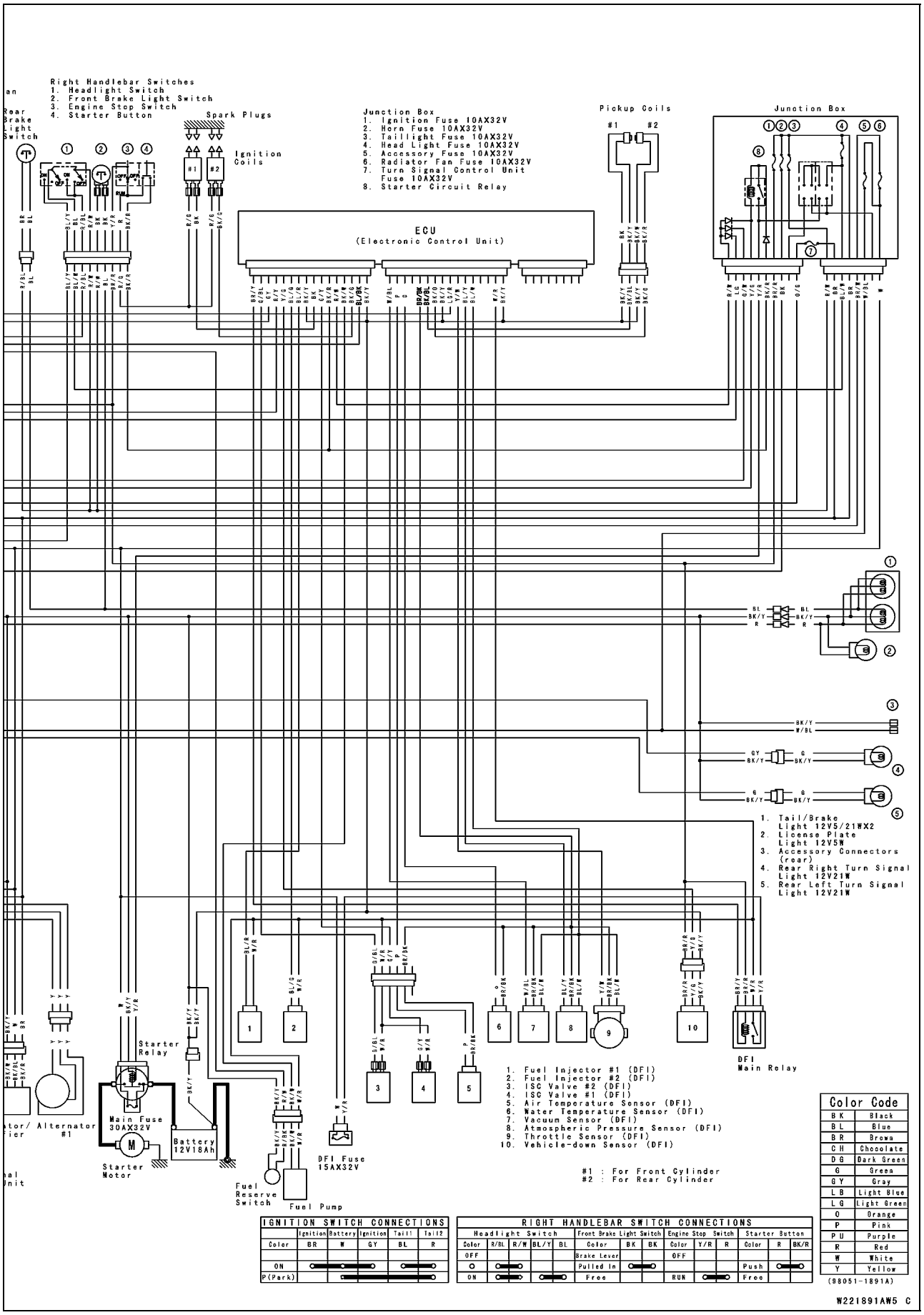

Downloaded from www.vulcanriders-sweden.org

VN1500-N Wiring Diagram (Australia)

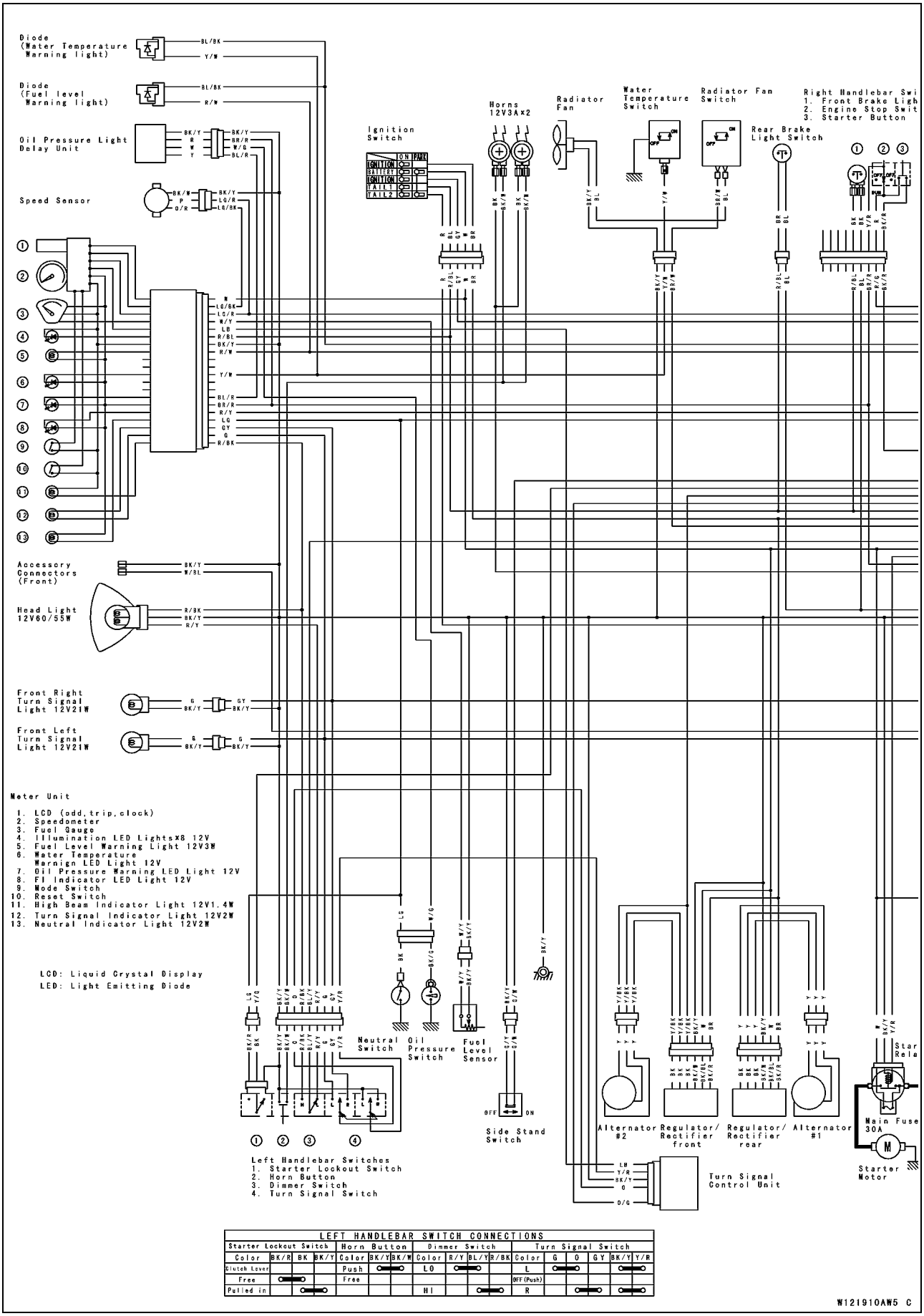

LEFT HANDLEBAR SWITCH CONNECTIONS

Starter Lockout Switch				Horn Button			Dimmer Switch				Turn Signal Switch					
Color	BK/R	BK	BK/Y	Color	BK/Y	BK/W	Color	R/Y	BL/Y	R/BK	Color	G	O	GY	BK/Y	Y/R
Clutch Lever				Push	●		LO	●			L	●			●	
Free	●			Free							OFF (Push)					
Pulled in		●					HI		●		R		●		●	

W121910AW5 C

Downloaded from www.vulcanriders-sweden.org

VN1500-N Wiring Diagram (Australia)

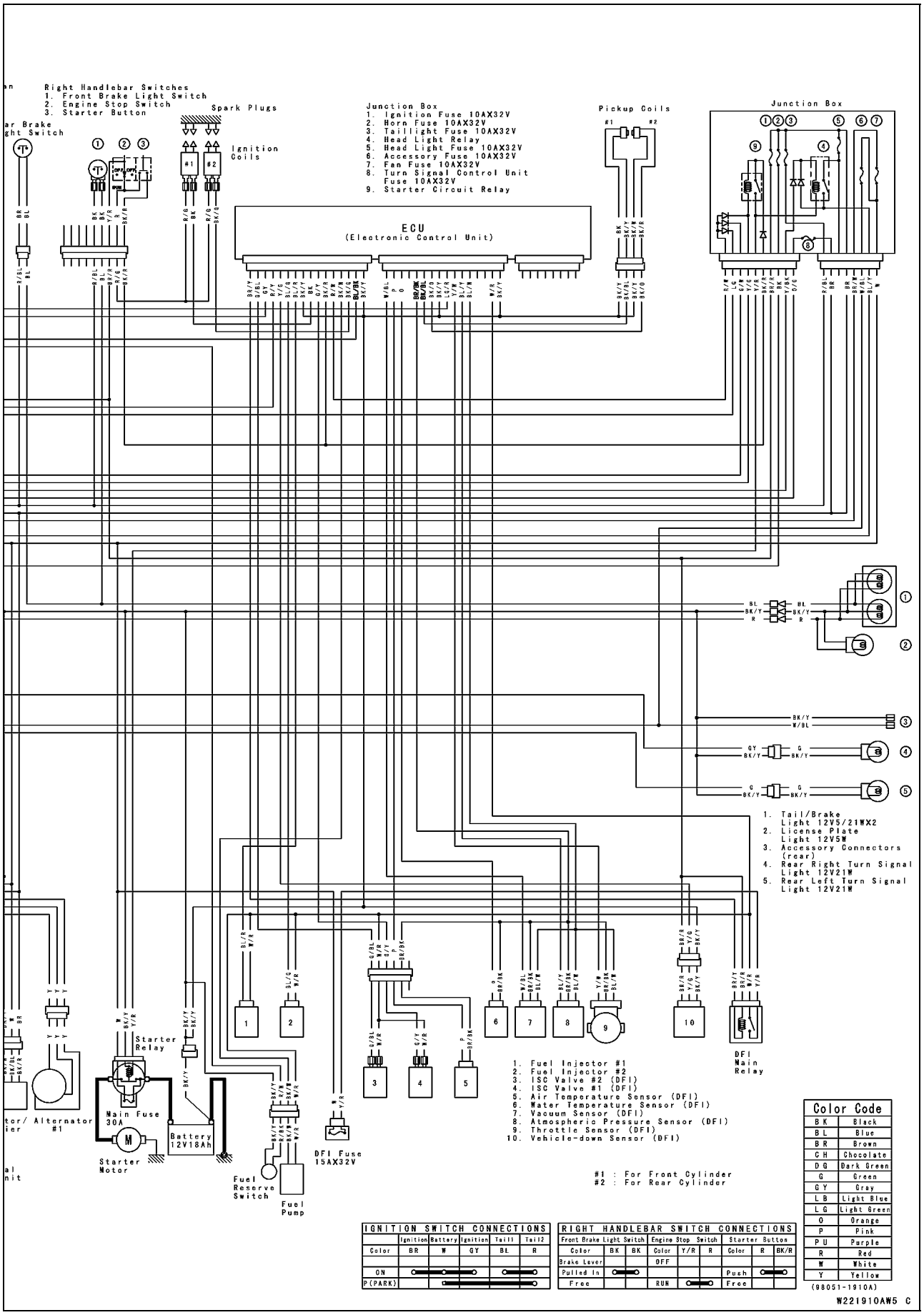

Downloaded from www.vulcanriders-sweden.org

Exploded View

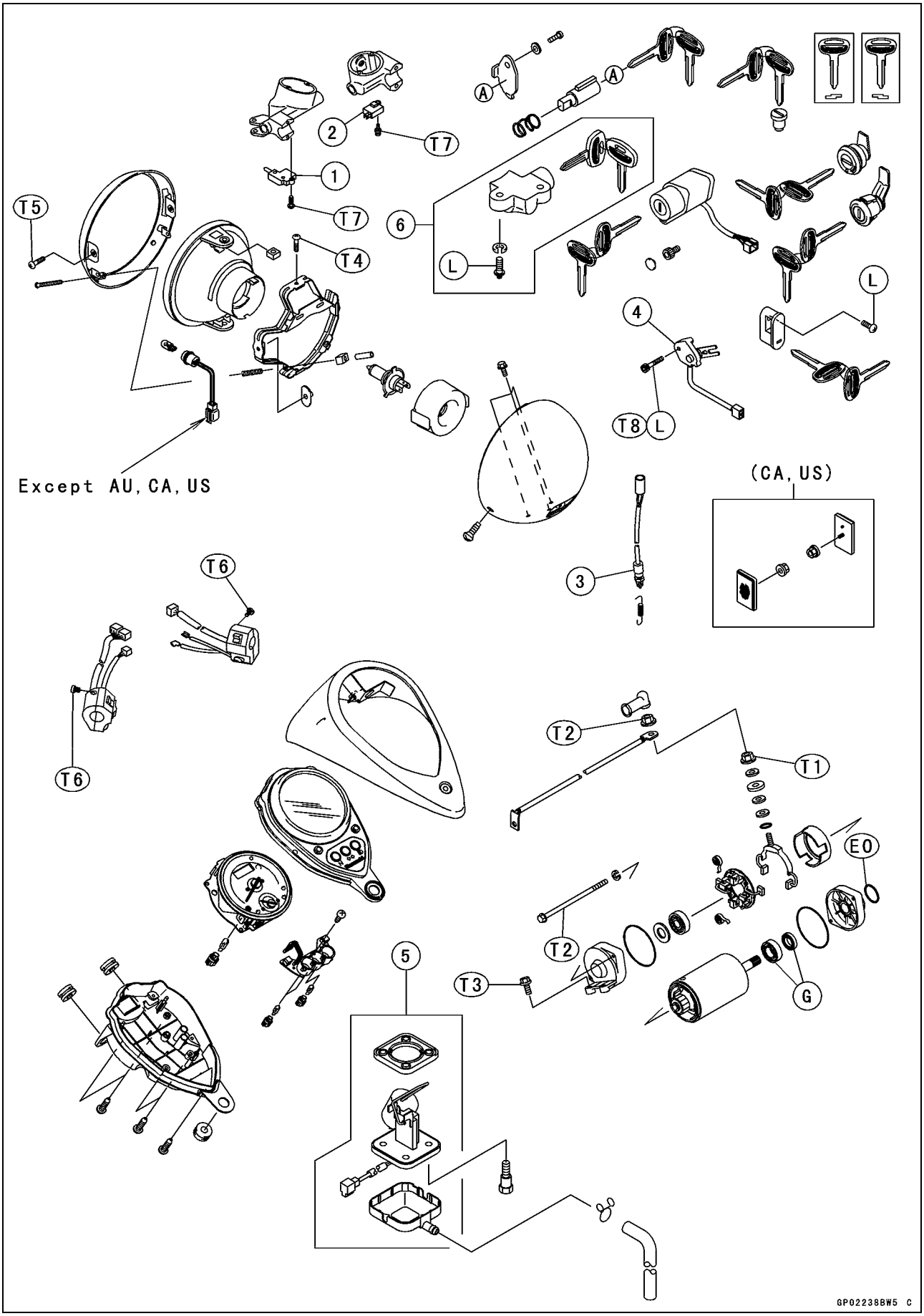

Downloaded from www.vulcanriders-sweden.org

Exploded View

1. Starter Lockout Switch
2. Front Brake Light Switch
3. Rear Brake Light Switch
4. Sidestand Switch
5. Fuel Level Sensor
6. Steering Lock (VN1500-N2 ~)

T1: 11 N·m (1.1 kgf·m, 95 in·lb)
T2: 4.9 N·m (0.50 kgf·m, 43 in·lb)
T3: 9.8 N·m (1.0 kgf·m, 87 in·lb)
T4: 2.9 N·m (0.30 kgf·m, 26 in·lb)
T5: 1.0 N·m (0.10 kgf·m, 9 in·lb)
T6: 3.4 N·m (0.35 kgf·m, 30 in·lb)
T7: 1.2 N·m (0.12 kgf·m, 10 in·lb)
T8: 8.8 N·m (0.90 kgf·m, 78 in·lb)
G: Apply grease.
L: Apply a non-permanent locking agent.

CA: Canada Model
US: United States Model
AU: Australia Model

Downloaded from www.vulcanriders-sweden.org

Exploded View

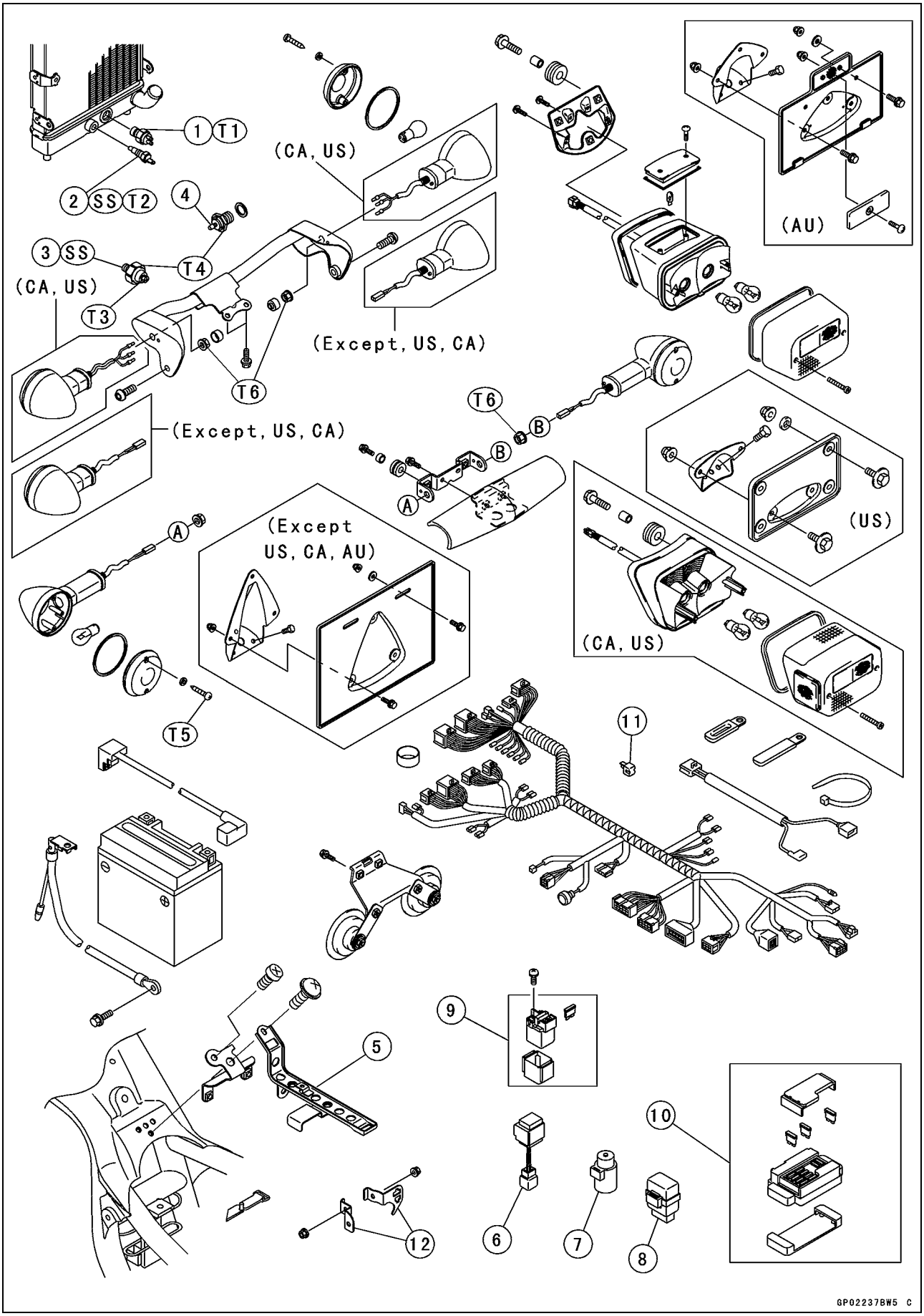

Downloaded from www.vulcanriders-sweden.org

Exploded View

1. Radiator Fan Switch
2. Water Temperature Switch
3. Oil Pressure Switch
4. Neutral Switch
5. Battery Holder
6. Oil Pressure Light Delay Unit
7. DFI Main Relay
8. Turn Signal Control Unit
9. Starter Relay
10. Junction Box
11. Diode for Fuel Indicator LED Light
12. Right Ignition Coil Brackets

T1: 18 N·m (1.8 kgf·m, 13.0 ft·lb)
T2: 7.4 N·m (0.75 kgf·m, 65 in·lb)
T3: 1.5 N·m (0.15 kgf·m, 13 in·lb)
T4: 15 N·m (1.5 kgf·m, 11.0 ft·lb)
T5: 1.0 N·m (0.10 kgf·m, 9 in·lb)
T6: 5.9 N·m (0.60 kgf·m, 52 in·lb)
SS: Apply silicone sealant (Kawasaki Bond: 56019-120).

AU: Australia Model
CA: Canada Model
US: United States Model

Downloaded from www.vulcanriders-sweden.org

Exploded View

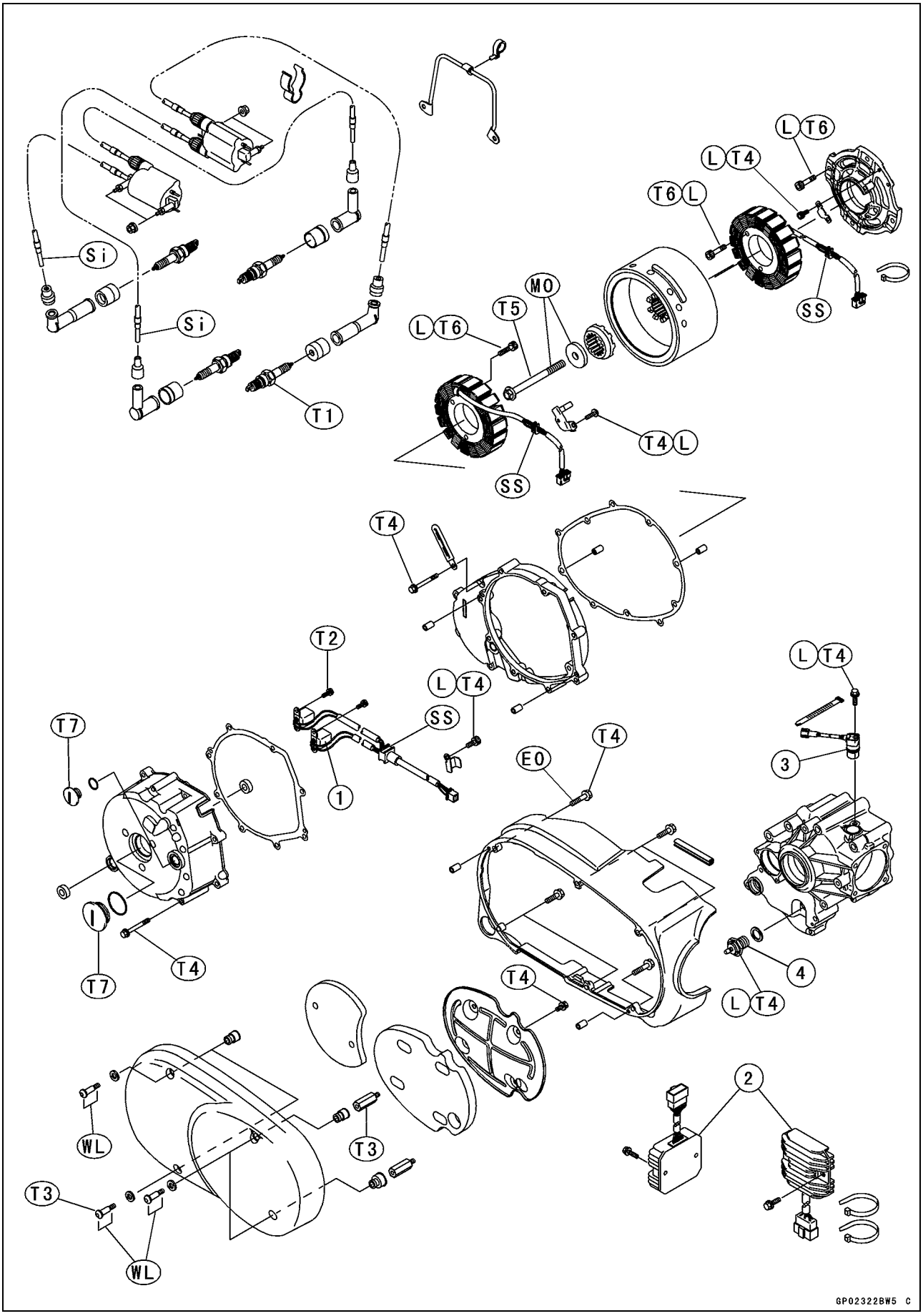

Downloaded from www.vulcanriders-sweden.org

Exploded View

1. Pickup Coils
2. Regulator/Rectifiers
3. Speed Sensor
4. Neutral Switch

T1: 18 N·m (1.8 kgf·m, 13 ft·lb)
T2: 2.9 N·m (0.30 kgf·m, 26 in·lb)
T3: 12 N·m (1.2 kgf·m, 104 in·lb)
T4: 9.8 N·m (1.0 kgf·m, 87 in·lb)
T5: 78 N·m (8.0 kgf·m, 57 ft·lb)
T6: 13 N·m (1.3 kgf·m, 13 in·lb)
T7: 1.5 N·m (0.15 kgf·m, 13 in·lb)
EO: Apply engine oil.
L: Apply a non-permanent locking agent.
MO: Apply molybdenum disulfide oil to the threads and both sides of the washer.
The molybdenum disulfide oil is a mixture of engine oil and molybdenum disulfide grease with a weight ratio (10 : 1).
Si: Apply silicone grease.
SS: Apply silicone sealant (Kawasaki Bond: 59019-120).
WL: Apply a soap and water solution or rubber lubricant.

Downloaded from www.vulcanriders-sweden.org

Specifications

Item	Standard
Battery	
Type	Sealed Battery
Model Name	FTZ16-BS
Capacity	12 V 18 Ah
Voltage	12.5 V or more
Charging System	
Alternator Type	Three-phase AC with delta connection, and twin magnet rotor
DC Battery Charging Voltage	14 ~ 15 V @3 000 r/min (rpm)
Alternator Output Voltage (No Load)	64 ~ 96 V @3 000 r/min (rpm)
Stator Coil (Battery Charging Coil) Resistance	0.33 ~ 0.49 Ω (× 1 Ω)
Regulator/Rectifier:	
Type	Load dumping regulator with full-wave rectifier
Resistance	in the text
Ignition System	
Ignition Coil:	
Primary Peak Voltage:	
Front	129 V or more
Rear	122 V or more
3 Needle Arcing Distance	6 mm (0.24 in.) or more
Primary Winding Resistance	1.9 ~ 2.9 Ω (× 1 Ω)
Secondary Winding Resistance	18 ~ 28 kΩ (× 1 kΩ)
Spark Plug:	
Spark Plug Gap	0.8 ~ 0.9 mm (0.031 ~ 0.035 in.)
Spark Plug Cap Resistance	3.75 ~ 6.25 kΩ (× 1 kΩ)
Pickup Coil:	
Pickup Coil Peak Voltage:	
Front	2.2 V or more
Rear	2.0 V or more
Pickup Coil Resistance	380 ~ 560 Ω (× 100 Ω)
Electric Starter System	
Starter Motor:	
Brush Length	12 mm (0.47 in.) (Service limit 8.5 mm (0.33 in.))
Commutator Diameter	28 mm (1.10 in.) (Service limit 27 mm (1.06 in.))
Switch And Sensor	
Rear Brake Light Switch Timing	ON after about 15 mm (0.59 in.) pedal travel
Engine Oil Pressure Switch Connections	When engine is stopped: ON When engine is running: OFF
Radiator Fan Switch Connections:	
Rising Temperature	From OFF to ON: 102 ~ 108°C (216 ~ 226°F)

Downloaded from www.vulcanriders-sweden.org

Specifications

Item	Standard
Falling Temperature:	
VN1500-N1 ~ N3	From ON to OFF: 97°C (203°F) or less
VN1500-N4 ~	From ON to OFF: 98°C (208°F) or less
	ON: Less than 0.5 Ω
	OFF: More than 1 MΩ
Water Temperature Switch Resistance:	
Rising Temperature	From OFF to ON: 113 ~ 117°C (235 ~ 243°F)
	From ON to OFF: 108°C (226°F) or less
Fuel Level Sensor Resistance	FULL position: 4 ~ 10 Ω
	EMPTY position: 90 ~ 100 Ω

○Refer to Fuel System chapter for specifications of DFI parts.

Special Tools - Spark Plug Wrench, Hex 18: 57001-1024
Jack: 57001-1238
Timing Light: 57001-1241
Hand Tester: 57001-1394
Attachment Jack: 57001-1398
Flywheel Holder: 57001-1410
Peak Voltage Adapter: 57001-1415
Filler Cap Driver: 57001-1454
Needle Adapter Set - Hand Tester: 57001-1457

Sealant - Kawasaki Bond (Silicone Sealant): 56019-120

Downloaded from www.vulcanriders-sweden.org

Servicing Precautions

There are a number of important precautions that should be followed servicing electrical systems.

- ○Do not reverse the battery cable connections. This will burn out the diodes on the electrical parts.
- ○Always check battery condition before condemning other parts of an electrical system. A fully charged battery is a must for conducting accurate electrical system tests.
- ○The electrical parts should never be struck sharply, as with a hammer, or allowed to fall on a hard surface. Such a shock to the parts can damage them.
- ○To prevent damage to electrical parts, do not disconnect the battery cables or any other electrical connections when the ignition switch is on, or while the engine is running.
- ○Because of the large amount of current, never keep the starter button pushed when the starter motor will not turn over, or the current may burn out the starter motor windings.
- ○Do not use a meter illumination bulb rated for other than voltage or wattage specified in the wiring diagram, as the meter or gauge panel could be warped by excessive heat radiated from the bulb.
- ○Take care not to short the cables that are directly connected to the battery positive (+) terminal to the chassis ground.
- ○Troubles may involve one or in some cases all items. Never replace a defective part without determining what CAUSED the failure. If the failure was caused by some other item or items, they too must be repaired or replaced, or the new replacement will soon fail again.
- ○Make sure all connectors in the circuit are clean and tight, and examine leads for signs of burning, fraying, etc. Poor leads and bad connections will affect electrical system operation.
- ○Measure coil and winding resistance when the part is cold (at room temperature).
- ○Wire Color Codes:

BK: Black	G: Green	P: Pink
BL: Blue	GY: Gray	PU: Purple
BR: Brown	LB: Light blue	R: Red
CH: Chocolate	LG: Light green	W: White
DG: Drak green	O: Orange	Y: Yellow

- ○Electrical Connectors
  Connectors [A]

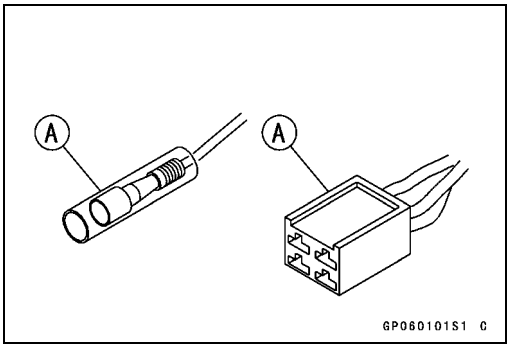

Downloaded from www.vulcanriders-sweden.org

Servicing Precautions

Connectors [B]

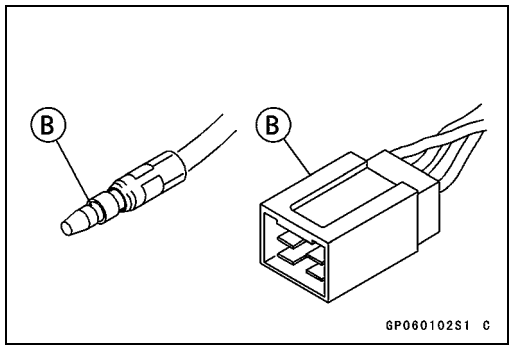

Downloaded from www.vulcanriders-sweden.org

Electrical Wiring

Wiring Inspection

- Visually inspect the wiring for signs of burning, fraying, etc.

★If any wiring is poor, replace the damaged wiring.

- Pull each connector [A] apart and inspect it for corrosion, dirt, and damage.

★If the connector is corroded or dirty, clean it carefully. If it is damaged, replace it.

- Check that the connectors are not loose.
- Check the wiring for continuity.

○Use the wiring diagram to find the ends of the lead which is suspected of being a problem.

○Connect the hand tester between the ends of the leads.

Special Tool - Hand Tester: 57001-1394

○Set the tester to the × 1 Ω range, and read the tester.

★If the tester does not read 0 Ω, the wire is defective. Replace the lead or the wiring harness [B] if necessary.

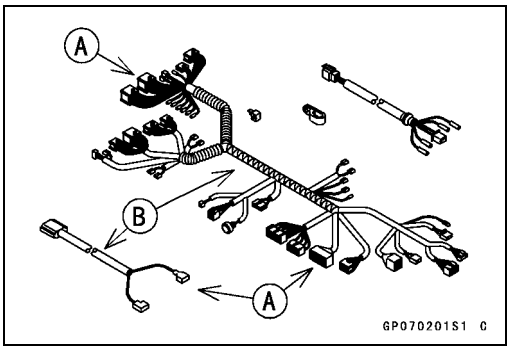

Downloaded from www.vulcanriders-sweden.org

Battery

Battery Removal

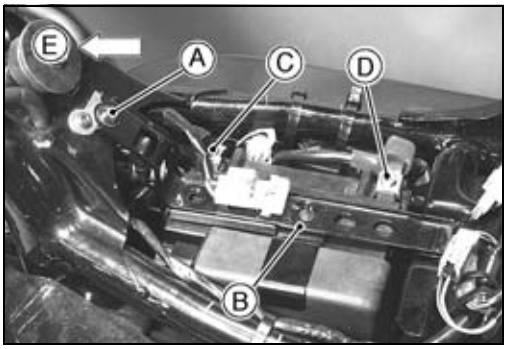

- Remove:
  Front Seat (see Frame chapter)
  Screw [A] and Battery Holder [B]
- Slide the black and red cap out.
- Disconnect the negative (–) cable [C] from the battery first and then the positive (+) cable [D] from the battery.
  Front [E]
- Pull the battery out of the case.
- Clean the battery using a solution of baking soda and water. Be sure that the wire connections are clean.

Battery Installation

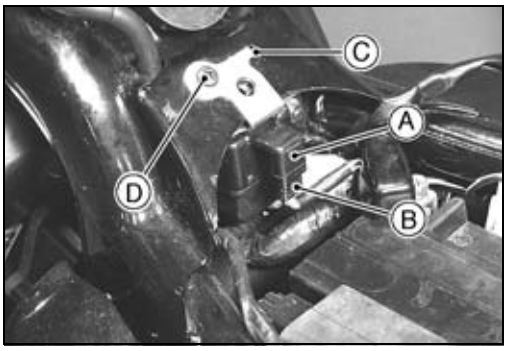

- Check that the vehicle-down sensor assy [A] is installed correctly.
- The connector [B] faces back and down, the hook [C] is fitted into the hole, and the screw [D] is tightened securely. Do not install the sensor upside down.

○The arrow of the sensor should face upward.

★If the vehicle-down sensor assy is not installed correctly, reinstall it (see Fuel System chapter).

⚠ WARNING

Incorrect installation of the vehicle-down sensor could cause sudden loss of engine power. The rider could lose balance during certain riding situations, like leaning over in a turn, with the potential for an accident resulting in injury or death. Ensure that the down sensor bracket is held in place by the screw as shown.

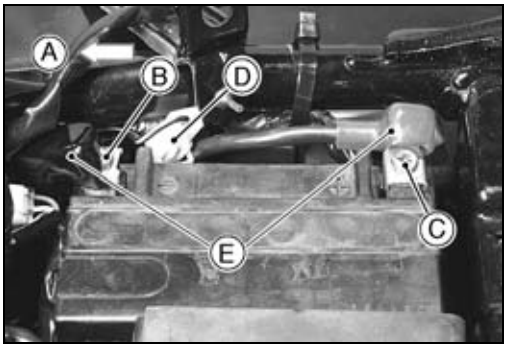

- Face the (–) terminal forward [A] and put the battery into the battery case.

CAUTION

Do not install the battery backwards.

- Connect the cable terminal [C] to the (+) terminal first , and then the cable terminal [B] to the (–) terminal. Be sure to connect the (–) connector [D].
- Apply a light coat of grease on the terminals to prevent corrosion.
- Cover the black and red caps [E]. The (–) terminal of the early models has no cap.

CAUTION

If each battery cable is not correctly disconnected or connected, sparks can arise at electrical connections, causing damage to electrical and DFI parts.

Downloaded from www.vulcanriders-sweden.org

Battery

- Put the battery holder [A] on the vehicle-down sensor bracket and insert the screw [B] through the battery holder and vehicle-down sensor bracket.
- Tighten the screw securely.
- Install the front seat (see Frame chapter).

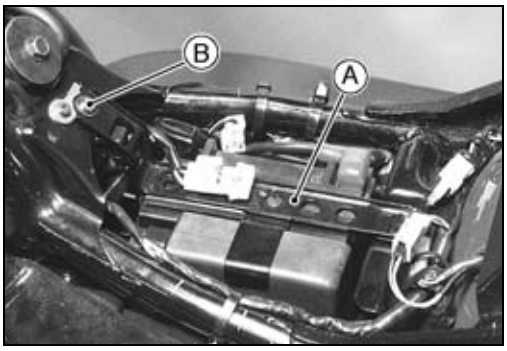

Electrolyte Filling

- Make sure that the model name [A] of the electrolyte container matches the model name [B] of the battery. These names must be the same.

Battery Model Name for VN1500-N1: FTZ16-BS

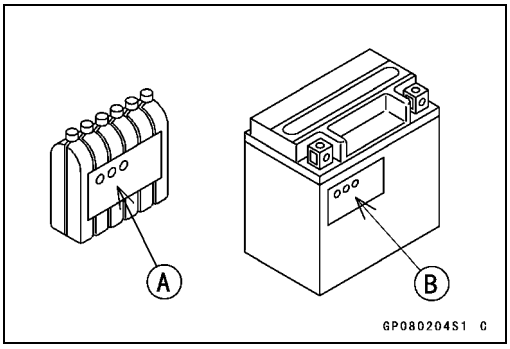

CAUTION

Be sure to use the electrolyte container with the same model name as the battery since the electrolyte volume and specific gravity vary with the battery type. This is to prevent overfilling of the electrolyte, shorting the battery life, and deterioration of the battery performance.

- Check to see that there is no peeling, tears or holes in the seal sheet on the top of the battery.
- Place the battery on a level surface.
- Remove the seal sheet [A].

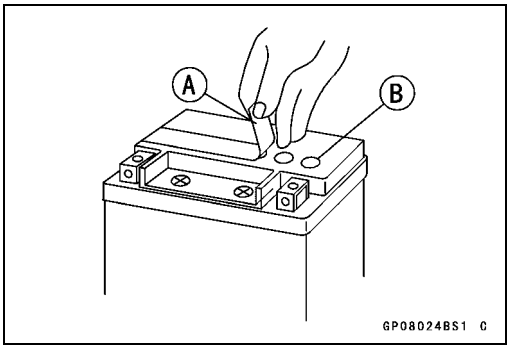

CAUTION

Do not remove the seal sheet sealing the filler ports [B] until just before use.

NOTE

○*A battery whose seal sheet has any peeling, tears, or holes, requires a refreshing charge (initial charge).*

- Take the electrolyte container out of the plastic bag.
- Detach the seal cap [A] from the container.

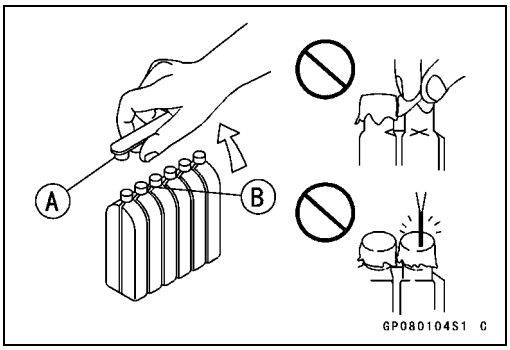

NOTE

○*Do not discard the seal cap because it is used as the battery plugs later.*

○*Do not peel back or pierce the seals [B] on the container.*

Downloaded from www.vulcanriders-sweden.org

Battery

- Place the electrolyte container upside down aligning the six seals with the six battery filler ports.
- Push the container down strongly enough to break the seals. Now the electrolyte should start to flow into the battery.

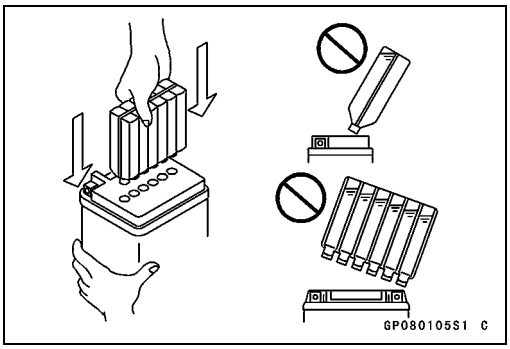

NOTE

○*Do not tilt the container as the electrolyte flow may be interrupted.*

- Make sure air bubbles [A] are coming up from all six filler ports.

○Leave the container this way for 5 minutes or longer.

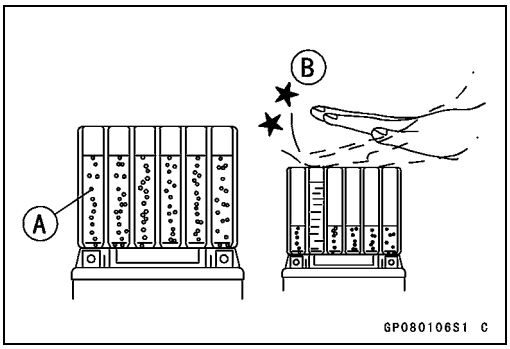

NOTE

○*If no air bubbles are coming up from a filler port, tap [B] the bottom of the container two or three times. Never remove the container from the battery.*

CAUTION

Fill the electrolyte into the battery until the container is completely emptied.

- Be certain that all the electrolyte has flowed out.
- Tap the bottom the same way as above if there is any electrolyte left in the container.
- Now pull the container gently out of the battery.
- Let the battery sit for **20** minutes. During this time, the electrolyte permeates the special separators and the gas generated by chemical reaction is released.
- Fit the seal cap [A] tightly into the filler ports until the seal cap is at the same level as the top of the battery.

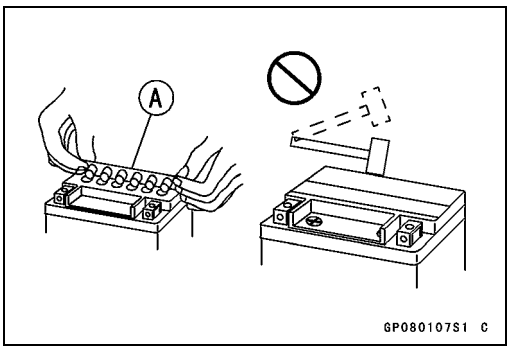

NOTE

○*Do not hammer. Press down evenly with both hands.*

⚠ WARNING

Once you installed the seal cap after filling the battery, never remove it, nor add any water or electrolyte.

Initial Charge

While a sealed battery can be used after only filling with electrolyte, a battery may not be able to sufficiently move a starter motor to start an engine in the cases shown in the table below, where an initial charge is required before use. However, if a battery shows a terminal voltage of 12.6 V or more, using a digital volt meter, after 10 minutes of filling, no initial charge is necessary.

NOTE

○*To measure battery terminal voltage, use a digital voltmeter which can be read one decimal place voltage.*

Downloaded from www.vulcanriders-sweden.org

Battery

Condition requiring initial charge	Charging method
At low temperature (lower than 0°C)	1.8 A × 2 ~ 3 hours
Battery has been stored under high temperature and humidity.	1.8 A × 15 ~ 20 hours
Seal sheet has been removed, or broken-peeling, tear or hole.	
Battery two or more years old from date of manufacture. Battery manufacturing date is printed on battery top. Example) 12 (Day) 10 (Month) 99 (Year) T1 (Mfg. location)	

Precautions

1) No need of topping-up

No topping-up is necessary in this battery until it ends its life under normal use. Forcibly prying off the seal cap to add water is very dangerous. Never do that.

2) Refreshing charge

If an engine will not start, a horn sounds weak, or lamps are dim, it indicates the battery has been discharged. Give refresh charge for 5 to 10 hours with charge current shown in the specification (see Refreshing Charge).

When a fast charge is inevitably required, do it following precisely the maximum charge current and time conditions indicated on the battery.

CAUTION

This battery is designed to sustain no unusual deterioration if refresh-charged according to the method specified above. However, the battery's performance may be reduced noticeably if charged under conditions other than given above. Never remove the seal cap during refresh charge.
If by chance an excessive amount of gas is generated due to overcharging, the relief valve releases the gas to keep the battery normal.

3) When you do not use the motorcycle for months:

Give a refresh charge before you store the motorcycle and store it with the negative cable removed. Give a refresh charge **once a month** during storage.

4) Battery life:

If the battery will not start the engine even after several refresh charges, the battery has exceeded its useful life. Replace it (Provided, however, the vehicle's starting system has no problem).

⚠ WARNING

Keep the battery away from sparks and open flames during charging, since the battery gives off an explosive gas mixture of hydrogen and oxygen. When using a battery charger, connect the battery to the charger before turning on the charger.
This procedure prevents sparks at the battery terminals which could ignite any battery gases.
No fire should be drawn near the battery, or no terminals should have the tightening loosened.
The electrolyte contains sulfuric acid. Be careful not to have it touch your skin or eyes. If touched, wash it off with liberal amount of water. Get medial attention if severe.

Interchange

The sealed battery can fully display its performance only when combined with a proper vehicle electric system. Therefore, replace the sealed battery only on a motorcycle which was originally equipped with the sealed battery.

Be careful, if the sealed battery is installed on a motorcycle which had an ordinary battery as original equipment, the sealed battery's life will be shortened.

Downloaded from www.vulcanriders-sweden.org

Battery

Charging Condition Inspection

○Battery charging condition can be checked by measuring battery terminal voltage with a digital voltmeter.

- Remove the front seat (see Frame chapter).
- Disconnect the battery terminals.

CAUTION

Be sure to disconnect the negative terminal first.



- Measure the battery terminal voltage.

NOTE

○*Measure with a digital voltmeter which can be read one decimal place voltage.*

★If the reading is 12.6 V or more, no refresh charge is required, however, if the read is below the specified, refresh charge is required.

Battery Terminal Voltage
Standard: 12.6 V or more

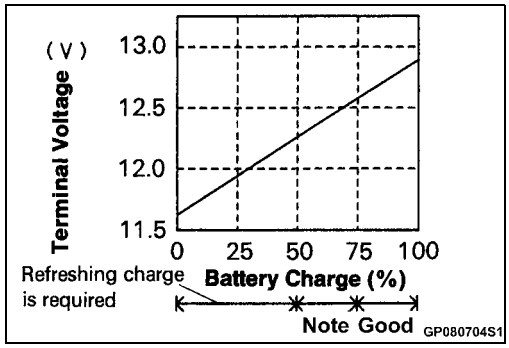

Refreshing Charge

- Remove the battery [A] (see Battery Removal).
- Do refresh charge by following method according to the battery terminal voltage.

⚠ WARNING

This battery is sealed type. Never remove seal cap [B] even at charging. Never add water. Charge with current and time as stated below.

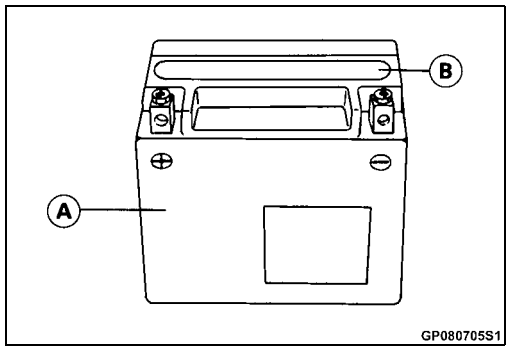

Terminal Voltage: 11.5 ~ less than 12.6 V
Standard Charge 1.8 A × 5 ~ 10 h (see following chart)
Quick Charge 9.0 A × 1.0 h

CAUTION

If possible, do not quick charge. If quick charge is done unavoidably, do standard charge later on.

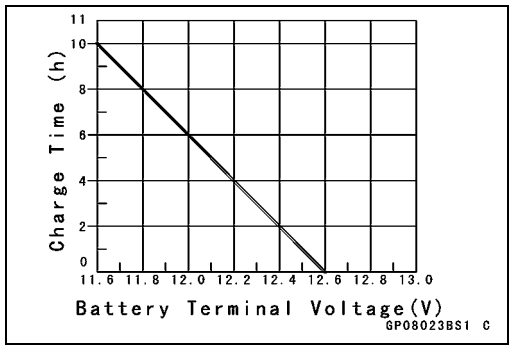

Terminal Voltage: less than 11.5 V
Charging Method: 1.8 A × 20 h

Downloaded from www.vulcanriders-sweden.org

Battery

NOTE

○*Increase the charging voltage to a maximum voltage of 25 V if the battery will not accept current initially. Charge for no more than 5 minutes at the increased voltage then check if the battery is drawing current. If the battery will accept current decrease the voltage and charge by the standard charging method described on the battery case. If the battery will not accept current after 5 minutes, replace the battery.*

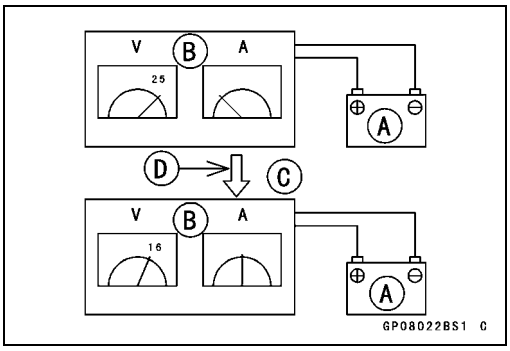

Battery [A]
Battery Charger [B]
Standard Value [C]
Current Starts to flow [D]

● Determine the battery condition after refresh charge.
○Determine the condition of the battery left for 30 minutes after completion of the charge by measuring the terminal voltage according to the table below.

Criteria	Judgement
12.6 V or higher	Good
12.0 ~ lower than 12.6 V	Charge insufficient → Recharge
lower than 12.0 V	Unserviceable → Replace

Downloaded from www.vulcanriders-sweden.org

Charging System

Alternator Outer Cover Removal

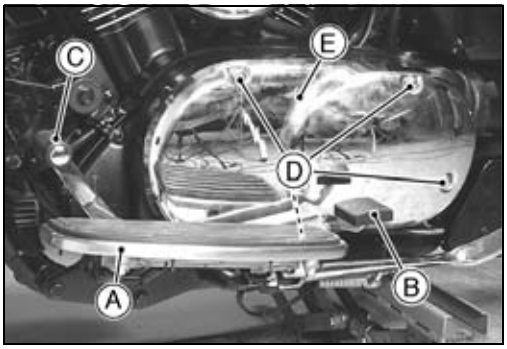

- Remove (left side view):
  Left Front Footboad [A] (see Crankshaft/Transmission chapter)
  Rear Shift Pedal [B] (see Crankshaft/Transmission chapter)
  Front Shift Pedal [C] (see Crankshaft/Transmission chapter)
- Unscrew the bolts [D] and take off the alternator outer cover [E].

Alternator Outer Cover Installation

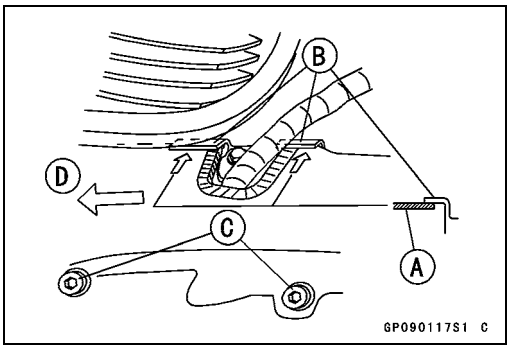

- First, insert the upper edge [A] of the alternator outer cover under the left crankcase ribs [B]. This prevents the rib failure.
- Apply a soap and water solution or rubber lubricant to the body of the alternator outer cover bolts [C] for easy installation and tighten them.

  Torque - Alternator Outer Cover Bolts: 12 N·m (1.2 kgf·m, 104 in·lb)

  Front [D]
- Install the front and rear shift pedals (see Crankshaft/Transmission chapter).

Alternator Cover Removal/Installation

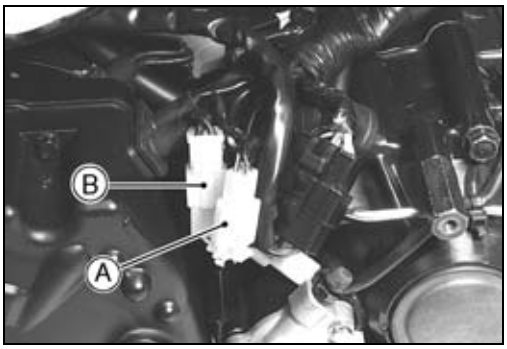

- Remove:
  Left Front Footboad (see Crankshaft/Transmission chapter)
  Rear Shift Pedal (see Crankshaft/Transmission chapter)
  Front Shift Pedal (see Crankshaft/Transmission chapter)
- Remove the alternator outer cover (see Alternator Outer Cover Removal).
- Disconnect the pickup coil connector [A] and outer alternator connector [B].

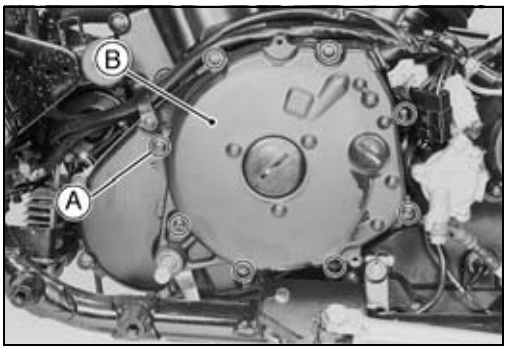

- Unscrew the bolts [A] and take off the alternator cover [B].
- Discard and replace the gasket with a new one.
- Tighten:

  Torque - Alternator Cover Bolts: 9.8 N·m (1.0 kgf·m, 87 in·lb)

Downloaded from www.vulcanriders-sweden.org

Charging System

Alternator Cover Assembly

- Install each shift shaft grease seal [A] with the lip [B] facing inside the alternator cover [C] until the seal side is flat [D] with the end of the hole.
- Apply a little high temperature grease on the lips.

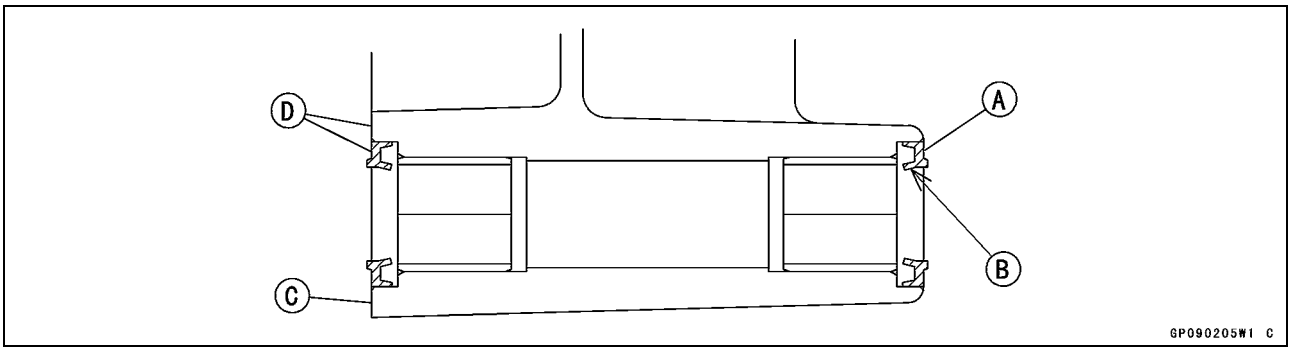

Alternator Inner Cover Removal

- Using the jack [A] and the attachment jack [B], raise the front and rear wheels just off the ground.
  Frame Pipe Rib [C]

Special Tools - Jack: 57001-1238
Attachment Jack: 57001-1398

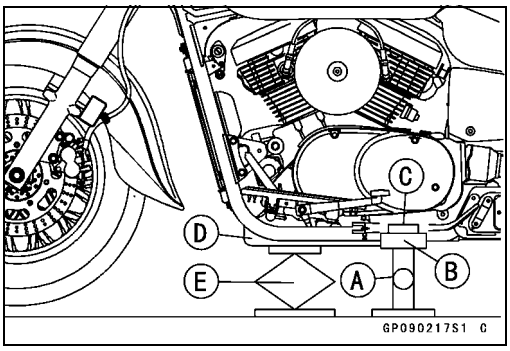

- Drain the engine oil (see Engine Lubrication System chapter).
- Remove:
  Fuel Tank (see Fuel System chapter)
  Left Ignition Coil (see Ignition Coil Removal)
  Alternator Outer Cover and Alternator Cover (see Alternator Outer Cover and Cover Removal)
  Alternator Connectors
- Loosen the front and rear exhaust pipe holder nuts, and both chamber bolts.
- Support the front part of the engine bottom [D], using a commercially available jack [E], and remove the front engine mounting bolt.
- Loosen the rear engine mounting bolt.
- Lift up [A] the front part of the engine, using the jack until the lower part of the alternator inner cover clears the lower frame pipe [B].

NOTE

○*Turn the propeller shaft so that the engine can be raised as high as possible.*

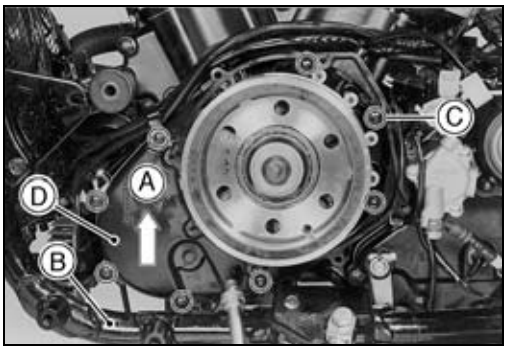

- Unscrew the bolts [C] and take off the alternator inner cover [D].

Downloaded from www.vulcanriders-sweden.org

Charging System

Alternator Inner Cover Installation

- Replace the gasket with a new one.
- Install the alternator inner cover.
- Tighten:

Torque - Alternator Inner Cover Bolts: 9.8 N·m (1.0 kgf·m, 87 in·lb)

- Move the engine into its original position and tighten the engine mounting bolts.

Torque - Engine Mounting Bolts and Nuts: 44 N·m (4.5 kgf·m, 33 ft·lb)

- Install the removed parts.

Alternator Rotor Removal

- Remove the alternator cover (see Alternator Cover Removal).
- Hold the alternator rotor [A] steady with the flywheel holder [B], and remove the rotor bolt [C].

Special Tool - Flywheel Holder: 57001-1410

- Take the alternator rotor, washer, and ratchet off the crankshaft.

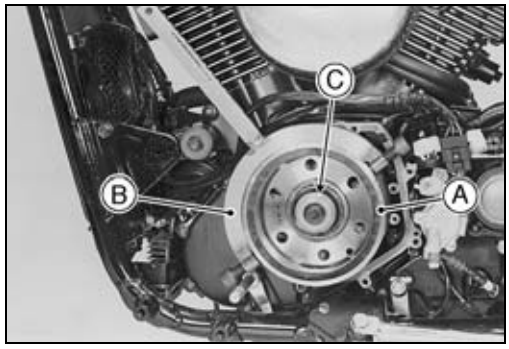

Alternator Rotor Installation

- Install the alternator rotor [A] while fitting the alignment notch [B] of the splines onto the alignment tooth [C].

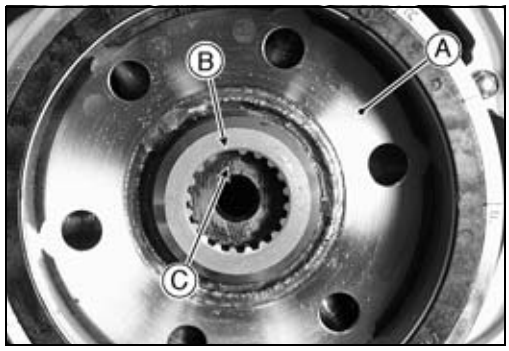

- Apply molybdenum disulfide oil to the threads of the alternator rotor bolt and both sides of the washer.
- Tighten:

Torque - Alternator Rotor Bolt: 78 N·m (8.0 kgf·m, 57 ft·lb)

- Install the alternator cover.

Alternator Outside Stator Removal

- Remove the alternator cover (see Alternator Cover Removal).
- Remove the pickup coils [A] (see Pickup Coil Removal).
- Unscrew the Allen bolts [B] and take the stator [C] off the alternator cover [D].

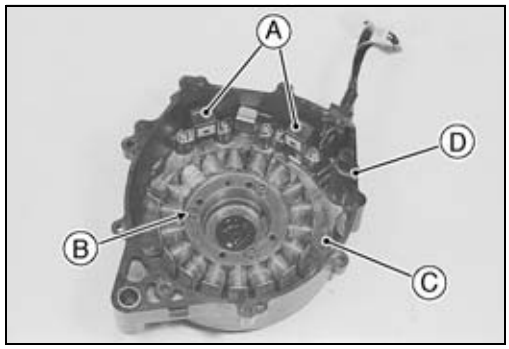

Downloaded from www.vulcanriders-sweden.org

Charging System

Alternator Outside Stator Installation

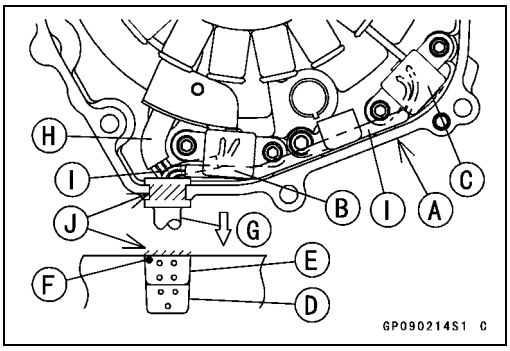

- Install the stator with the Y leads on the alternator cover [A].
- Apply:

Non-permanent Locking Agent -
Alternator Stator Bolts

- Tighten:

Torque - Alternator Outer Stator Bolts: 13 N·m (1.3 kgf·m, 113 in·lb)

- Install the pickup coils as shown.
  Pickup Coil [B] with shorter leads (BK and BK/Y) for #1 (front)
  Pickup Coil [C] with longer leads (BK/W and BK/R) for #2 (rear)
- Tighten:

Torque - Pickup Coil Screws: 2.9 N·m (0.30 N·m, 26 in·lb)

○Run the shorter pickup coil leads over the Alternator leads, and the longer pickup coil leads over the shorter pickup coil leads.

- Apply:

Non-permanent Locking Agent -
Stator Lead Holder Screw
Pickup Coil Lead Holder Bolt

- Tighten:

Torque - Stator Lead Holder Screw: 9.8 N·m (1.0 kgf·m, 87 in·lb)
Pickup Coil Lead Holder Bolt: 9.8 N·m (1.0 kgf·m, 87 in·lb)

- Apply silicone sealant to all the sides of the grommets as shown, and fit the grommets into the notch of the alternator cover.

Kawasaki Bond (Silicone Sealant): 56019-120

○First, install the grommet [D] of the alternator leads, and then the grommet [E] of the pickup coil leads with the round mark [F] up.

- Pull [G] the alternator leads and pickup coil leads [I] outside the alternator cover, and **reduce the slack of leads as possible in the cover** in order to prevent contact with the rotor.
- Apply silicone sealant to the mating surface [J] of the grommet.
- Connect the outside alternator connector (Y leads) to the connector (Y leads) of the regulator/rectifier.

Downloaded from www.vulcanriders-sweden.org

Charging System

Alternator Inside Stator Removal

- Remove the alternator outer cover, the alternator cover, the alternator inner cover, and the alternator rotor (see Alternator Rotor Removal).
- Unscrew the inside stator bolts [A] and take the inside stator [B] and holder [C] off the left crankcase.

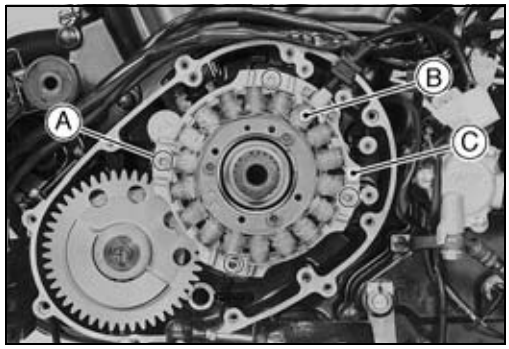

Alternator Inside Stator Installation

- Install the inside stator with the Y leads on the left crankcase.
- Apply:

Non-permanent Locking Agent -
Alternator Inside Stator

- Tighten:

Torque - Alternator Inside Stator Bolts: 13 N·m (1.3 kgf·m, 113 in·lb)

- Apply silicone sealant to the grommet and fit it into the notch of the alternator inner cover.
- Connect the inside alternator connector (Y leads) to the connector (Y/BK leads) of the regulator/rectifier.

Downloaded from www.vulcanriders-sweden.org

Charging System

Charging Voltage Inspection

- Check the battery condition.
- Warm up the engine to obtain actual alternator operating conditions.
- Remove the front seat (see Frame chapter).
- Check that the ignition switch is turned off, and connect the hand tester to the battery to the battery as shown in the table.

Special Tool - Hand Tester: 57001-1394

Regulator/Rectifier Output Voltage

Tester Range	Connections		Reading @3 000 rpm
	Tester (+) to	Tester (–) to	
25 V DC	Battery (+)	Battery (–)	14.2 ~ 15.2 V

- Turn on the ignition switch and start the engine, and note the voltage readings at various engine speeds with the headlight turned on and then turned off (To turn off the headlight of the US model, disconnect the headlight connector in the headlight unit). The readings should show nearly battery voltage when the engine speed is low, and as the engine speed rises, the readings should also rise. But they must be kept under the specified voltage.
- Turn off the ignition switch to stop the engine, and disconnect the hand tester.

★If the charging voltage is kept between the values given in the table, the charging system is considered to be working normally.

★If the output voltage is much higher than the values specified in the table, the regulator/rectifier is defective or the regulator/rectifier leads are loose or open.

★If the battery voltage does not rise as the engine speed increases, then the regulator/rectifier is defective or the alternator output is insufficient for the loads. Check the alternator and regulator/rectifier to determine which part is defective.

Alternator Inspection

There are three types of alternator failures: short, open (lead burned out), or loss in rotor magnetism. A short or open in one of the stator coil leads will result in either a low output, or no output at all. A loss in rotor magnetism, which may be caused by dropping or hitting the alternator, by leaving it near an electromagnetic field, or just by aging, will result in low output.

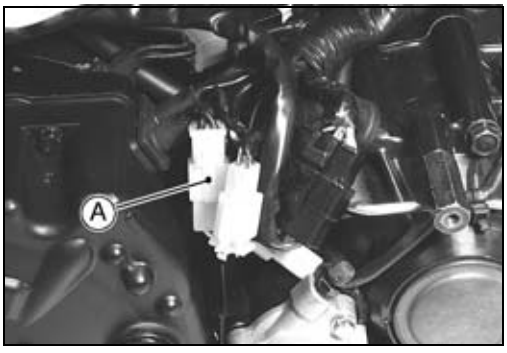

- To check the alternator output voltage, do the following procedures.

○Remove the alternator outer cover and disconnect the outside alternator connector [A].

○Connect the hand tester to the outer as shown.

Special Tool - Hand Tester: 57001-1394

○Start the engine.

○Run it at 3000 rpm of the engine speed.

○Note the voltage readings.

Downloaded from www.vulcanriders-sweden.org

Charging System

Alternator Output Voltage

Tester Range	Connections		Reading @3 000 rpm
	Tester (+) to	Tester (–) to	
250 V AC	One yellow lead	Another yellow lead	60 ~ 90 V

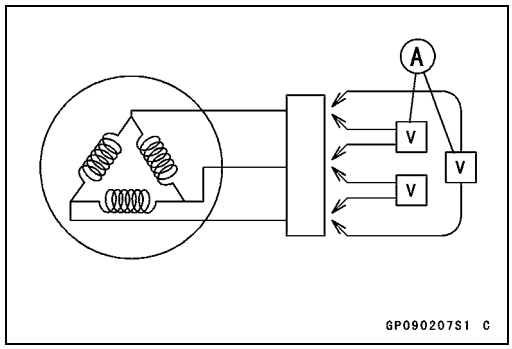

★If the output voltage shows the value in the table, the alternator operates properly and the regulator/rectifier is damaged. A much lower reading than the value in the table indicates that the alternator is defective.

○Repeat the test for the other yellow leads.

Hand Tester [A]

● Check the stator coil resistance as follows:

○Stop the engine.

○Connect the hand tester [A] to the connector as shown in the table.

○Note the resistance readings.

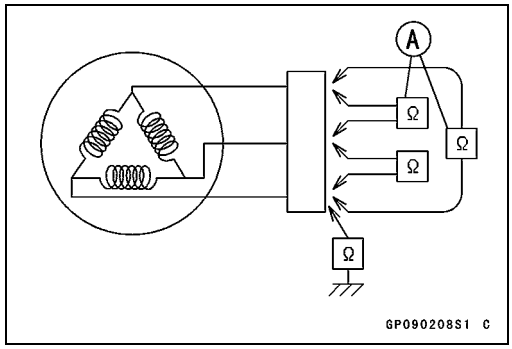

Stator Coil Resistance

Tester Range	Connections		Reading
	Tester (+) to	Tester (–) to	
× 1 Ω	One yellow lead	Another yellow lead	0.33 ~ 0.49 Ω

★If there is more resistance than shown in the table, or no hand tester reading (infinity), the stator has an open lead and must be replaced. Much less than this resistance means the stator is shorted, and must be replaced.

● Using the highest resistance range of the hand tester, measure the resistance between each of the yellow leads and chassis ground.

★Any hand tester reading less than infinity (∞) indicates a short, necessitating stator replacement.

★If the stator coil has normal resistance, but the voltage check showed the alternator to be defective, then the rotor magnets have probably weakened, and the rotor must be replaced.

○Repeat the test for the other yellow leads.

○Repeat the test for the inside alternator connector.

Regulator/Rectifier Removal

● Remove the alternator outer cover (see Alternator Outer Cover Removal).

● Disconnect the regulator/rectifier connectors.

Front Regulator/Rectifier Connector [A] for inside Alternator

Rear Regulator/Rectifier Connector [B] for outside Alternator

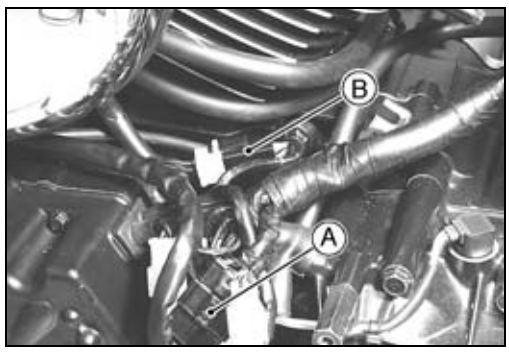

Downloaded from www.vulcanriders-sweden.org

Charging System

- Remove the cover bolts [A] and take off the regulator/rectifier cover [B].

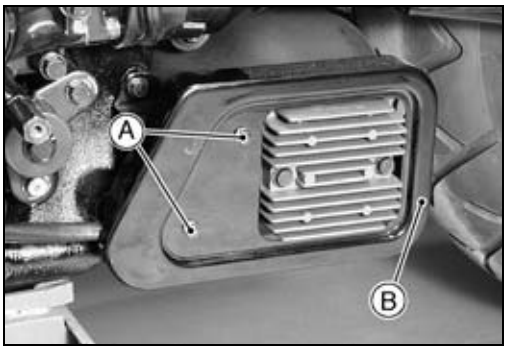

- Remove the regulator/rectifier bolts [A] and take off the rear regulator/rectifier [B].

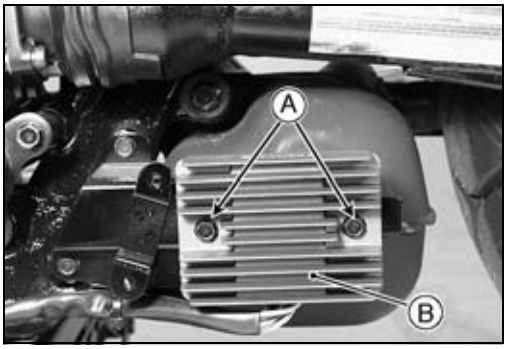

- Remove the regulator/rectifier mounting bolts and take off the front regulator/rectifier [A].



Downloaded from www.vulcanriders-sweden.org

Charging System

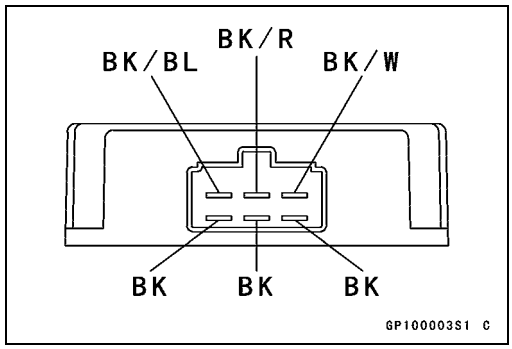

Rectifier Inspection

- Remove the alternator outer cover (see Alternator Outer Cover Removal).
- Check the rectifier resistance as follows.
- Disconnect the regulator/rectifier connector.
- Connect the hand tester (special tool) to the regulator/rectifier as shown in the table, and check the resistance in both directions of each diode in the rectifier following the table.

★The resistance should be low in one direction and more than ten times as much in the other direction. If any two leads are low or high in both directions, the rectifier is defective and the regulator/rectifier must be replaced.

NOTE

○*The actual tester reading varies with the hand tester used and the individual rectifier, but, generally speaking, the lower reading should be from zero to one half the scale.*

Rectifier Circuit Inspection

No.	Connections		Reading	Tester Range
	Tester (+) to	Tester (–) to		
1	BK1	BK/BL	∞	× 10 Ω or × 100 Ω
2	BK2			
3	BK3			
4	BK1	BK/W	1/2 scale	
5	BK2			
6	BK3			
7	BK/BL	BK1		
8		BK2		
9		BK3		
10	BK/W	BK1	∞	
11		BK2		
12		BK3		

- Repeat the test for another regulator/rectifier.

Regulator Inspection

○To test the regulator out of circuit, use three 12 V batteries and a test light (12 V 3 ~ 6 W bulb in a socket with leads).

CAUTION

The test light works as an indicator and also as a current limiter to protect the regulator/rectifier from excessive current. Do not use an ammeter instead of a test light.

Downloaded from www.vulcanriders-sweden.org

Charging System

● Do the 1st step regulator circuit test.
○Connect the test light and the 12 V battery to the regulator/rectifier as shown.
○Check BK1, BK2, BK3 terminals respectively.
★If the test light turns on, the regulator/rectifier is defective. Replace it.
★If the test light does not turn on, continue the test.

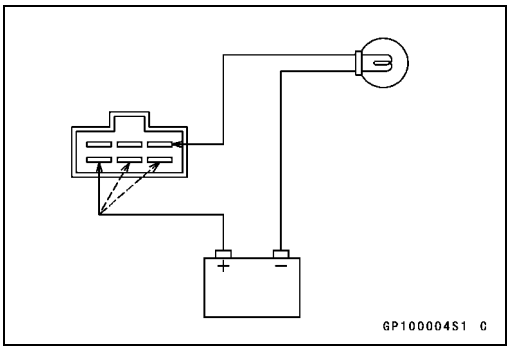

● Do the 2nd step regulator circuit test.
○Connect the test light and the 12 V battery in the same manner as specified in the “1st step regulator circuit test”.
○Apply 12 V to the BK/R terminal.
○Check BK1, BK2, and BK3 terminals respectively.
★If the test light turns on, the regulator/rectifier is defective. Replace it.
○If the test light does not turn on, continue the test.

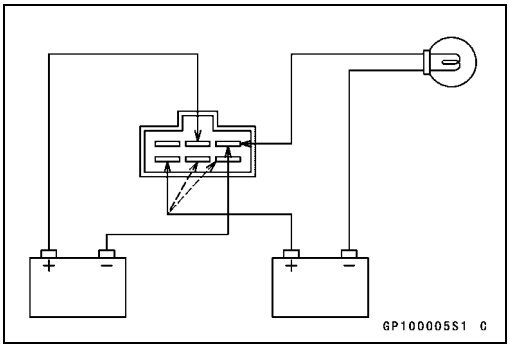

● Do the 3rd step regulator circuit test.
○Connect the test light and the 12 V battery in the same manner as specified in the “1st step regulator circuit test”.
○Momentarily apply 24 V to the BK/R terminal by adding a 12 V battery.
○Check BK1, BK2, and BK3 terminals respectively.

CAUTION

Do not apply more than 24 volts. If more than 24 volts is applied, the regulator/rectifier may be damaged. Do not apply 24 V more than a few seconds. If 24 volts is applied for more than a few seconds, the regulator/rectifier may be damaged.

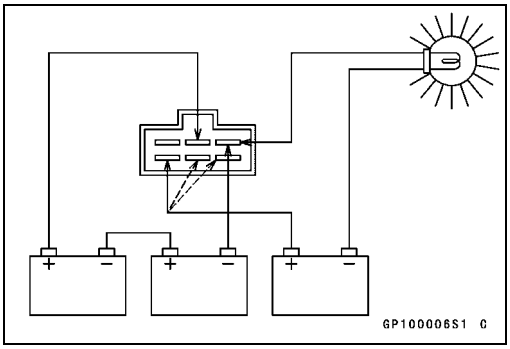

★If the test light does not light when 24 V is applied momentarily to the BK/R terminal, the regulator/rectifier is defective. Replace it.
★If the regulator/rectifier passes all the tests described, it may still be defective. If the charging system still does not work properly after checking all the components and the battery, test the regulator/rectifier by replacing it with a known good unit.
● Repeat the test for another regulator/rectifier.

Downloaded from www.vulcanriders-sweden.org

Charging System

Charging System

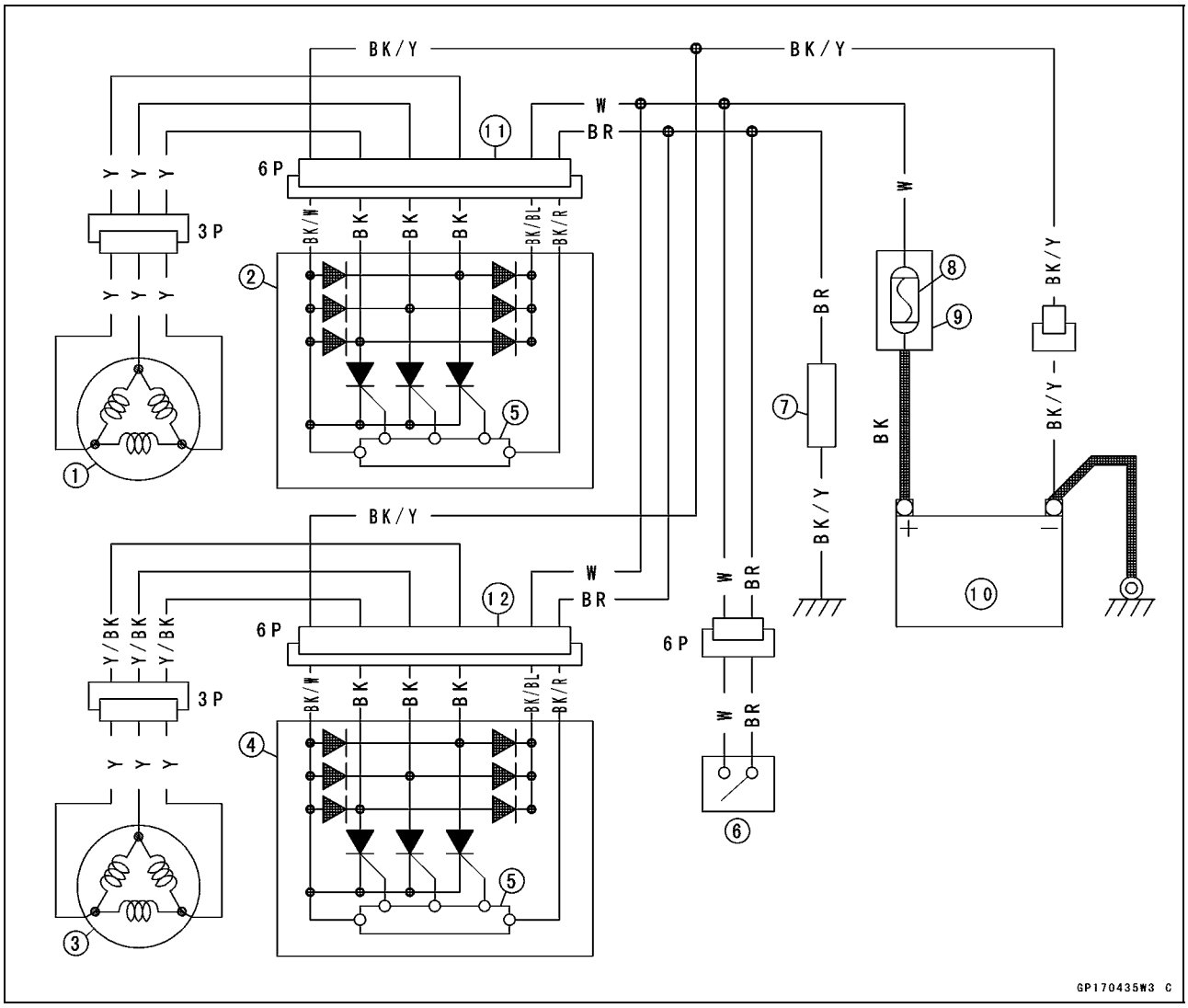

1. Alternator #1 (outside)
2. Regulator/Rectifier #1 (rear)
3. Alternator #2 (inside)
4. Regulator/Rectifier #2 (front)
5. Controller
6. Ignition Switch
7. Load
8. Main Fuse 30 A
9. Starter Relay
10. Battery 12 V × 18 Ah
11. Connector #1
12. Connector #2

Downloaded from www.vulcanriders-sweden.org

Ignition System

Ignition System Circuit

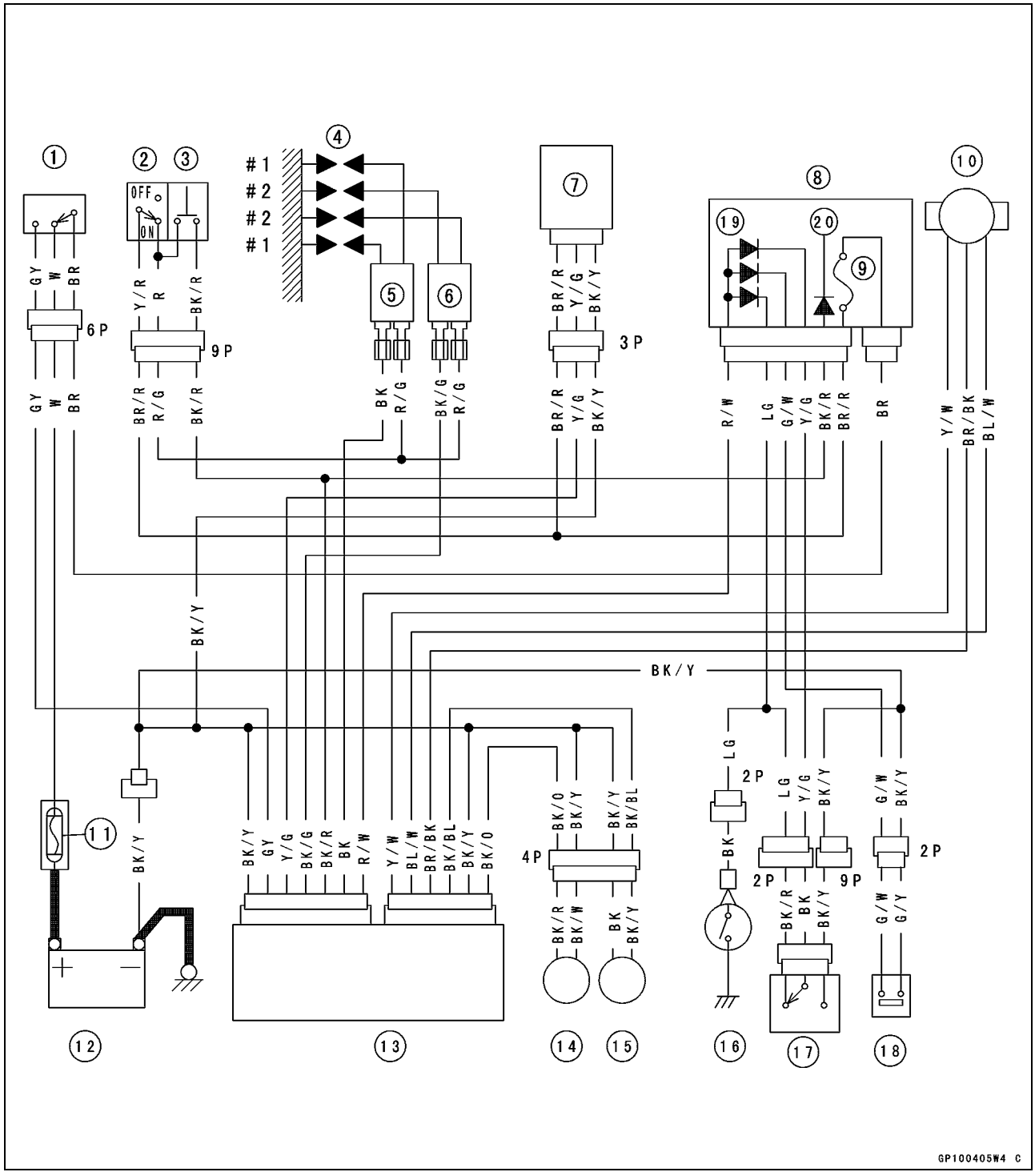

#1: For Front Cylinder

#2: For Rear Cylinder

1. Ignition Switch
2. Engine Stop Switch
3. Starter Button
4. Spark Plugs
5. Ignition Coil #1
6. Ignition Coil #2
7. Vehicle-down Sensor (DFI)
8. Junction Box
9. Ignition Fuse 10 A
10. Throttle Sensor (DFI)
11. Main Fuse 30 A
12. Battery
13. ECU (DFI)
14. Pickup Coil #1
15. Pickup Coil #2
16. Neutral Switch
17. Starter Lockout Switch
18. Sidestand Switch
19. Interlock Diodes
20. Starter Circuit Relay

Downloaded from www.vulcanriders-sweden.org

Ignition System

Ignition System Troubleshooting

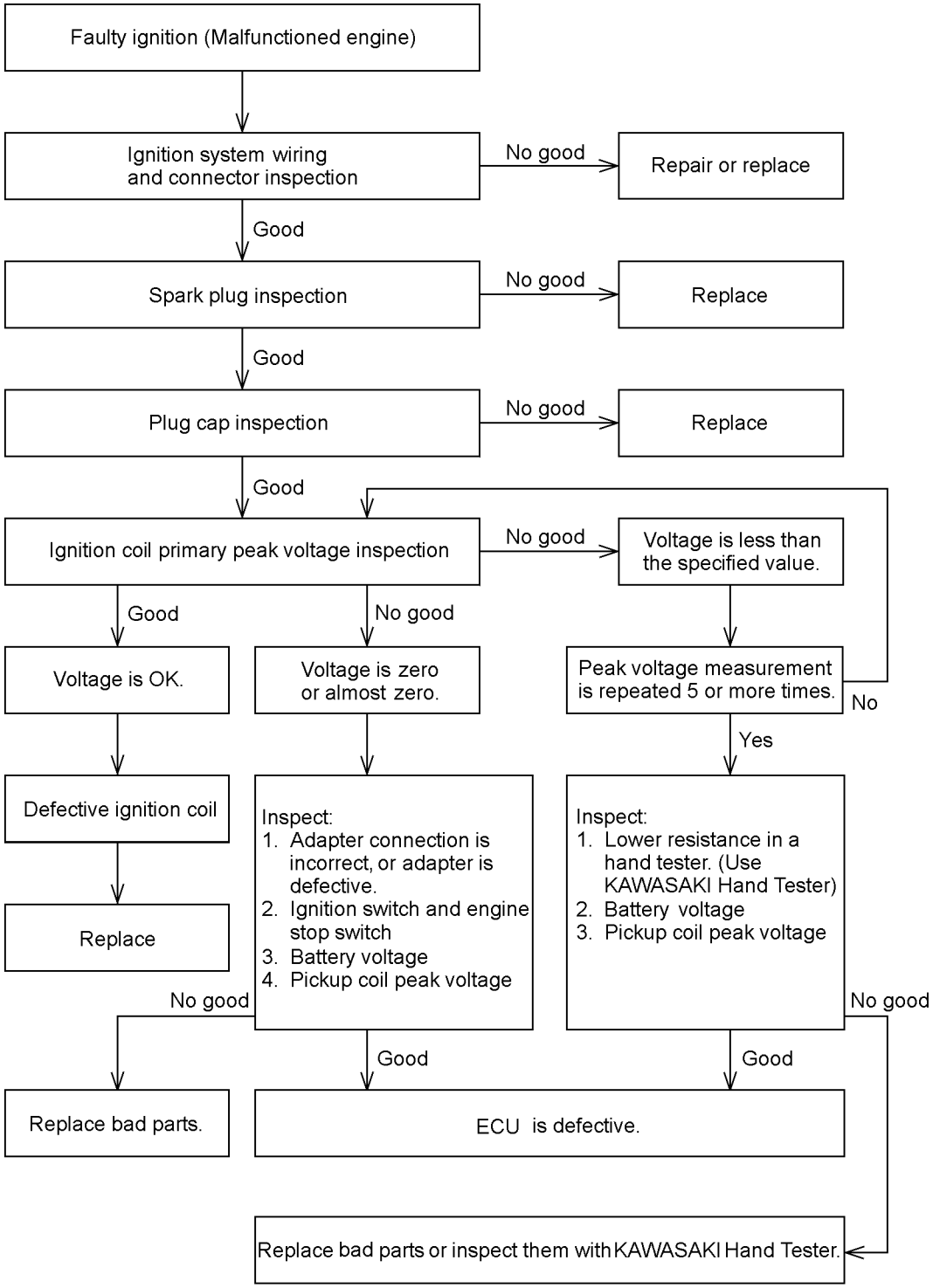

Downloaded from www.vulcanriders-sweden.org

Ignition System

⚠ WARNING

The ignition system produces extremely high voltage. Do not touch the spark plugs, ignition coils, or their cables while the engine is running, or you could receive a severe electrical shock.

CAUTION

Do not disconnect the battery cables or any other electrical connections when the ignition switch is on, or while the engine is running. This is to prevent IC igniter damage in the DFI.
Do not install the battery backwards. The negative side is grounded. This is to prevent damage to the IC igniter in the ECU and the diodes.

Ignition Coil Removal

- Remove the fuel tank (see Fuel System chapter).
- Remove the mounting nuts [A].
- Pull off the high-tension cables [B] from the spark plugs.

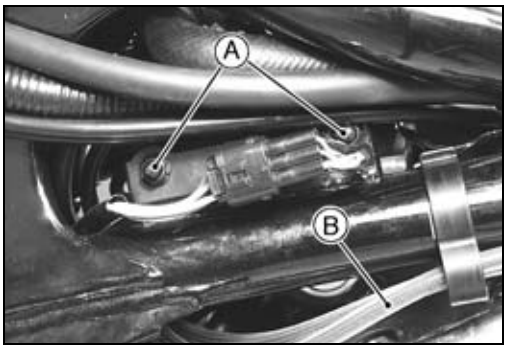

- Disconnect the primary leads [A].

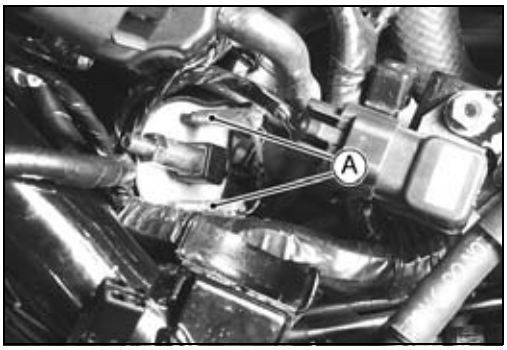

- Take out the #1 ignition coil [A] as shown.



Downloaded from www.vulcanriders-sweden.org

Ignition System

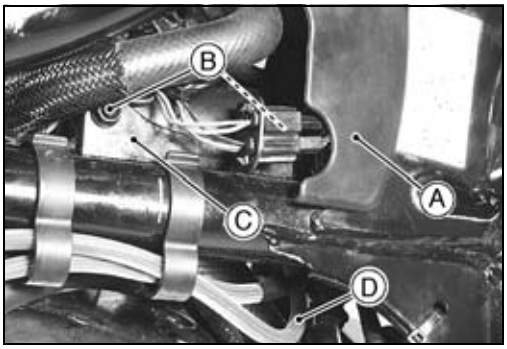

- Remove the cover [A].
- Remove the mounting nuts [B].
- Take out the #2 ignition coil [C].
- Disconnect the primary leads.
- Pull off the high-tension cables [D] from the spark plugs.

Ignition Coil Installation

- Connect the primary leads to the ignition coil terminals and run the high-tension cables according to the Cable, Wire, and Hose Routing section in the General Information chapter.

Ignition Coil Inspection

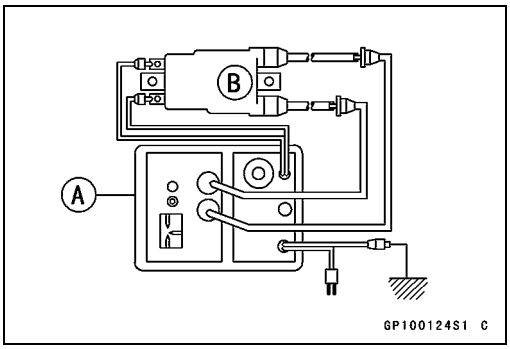

- Remove the ignition coils (see Ignition Coil Removal).
- Measure the arcing distance with a commercially available coil tester [A] to check the condition of the ignition coil [B].

○Connect the ignition coil (with the spark plug cap left attached at the end of the spark plug cable) to the tester in the manner prescribed by the manufacturer and measure the arcing distance.

Ignition Coil Arcing Distance
Standard: 6 mm (0.24 in.) or more

⚠ WARNING

To avoid extremely high voltage shocks, do not touch the coil body or cables.

★If the distance reading is less than the specified value, the ignition coil or spark plug caps are defective.

- To determine which part is defective, measure the arcing distance again with the spark plug caps removed from the ignition coil. Remove the caps by turning them counterclockwise.

★If the arcing distance is subnormal as before, the trouble is with the ignition coil itself. If the arcing distance is now normal, the trouble is with the spark plug cap.

★If the coil tester is not available, the coil can be checked for a broken or badly shorted winding with the hand tester (special tool).

Special Tool - Hand Tester: 57001-1394

NOTE

○*The hand tester cannot detect layer shorts and shorts resulting from insulation breakdown under high voltage.*

Downloaded from www.vulcanriders-sweden.org

Ignition System

● Measure the primary winding resistance as follows.
○Connect the hand tester between the coil terminals.
○Set the tester to the × 1 Ω range, and read the tester.
● Measure the secondary winding resistance as follows.
○Remove the plug caps by turning them counterclockwise.
○Connect the tester between the spark plug cables.
○Set the tester to the × 1 kΩ range and read the tester.
Measure primary winding resistance [A].
Measure secondary winding resistance [B].
Ignition Coil [C]

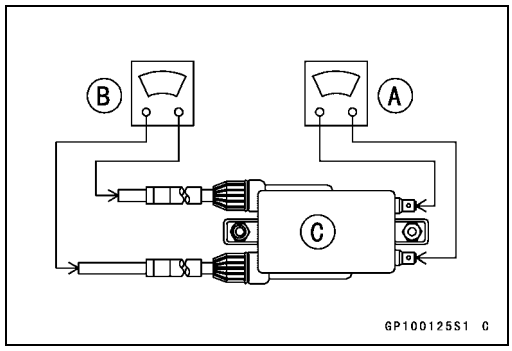

Ignition Coil Winding Resistance
Primary Windings: 1.9 ~ 2.9 Ω (× 1 Ω)
Secondary Windings: 18 ~ 28 kΩ (× 1 kΩ)

★If the tester does not read as specified, replace the coil.
○To install the plug cap, turn it clockwise.

Spark Plug Removal

● Remove the spark plug caps.
● Remove the spark plugs using the 18 mm plug wrench.

Special Tool - Spark Plug Wrench, Hex 18: 57001-1024

Spark Plug Installation

● Insert the spark plug vertically into the plug hole with the plug installed in the plug wrench (special tool) [A].
● Tighten the plugs.

Special Tool - Spark Plug Wrench, Hex 18: 57001-1024

Torque - Spark Plugs: 18 N·m (1.8 kgf·m, 13.0 ft·lb)

● Fit the plug caps securely.



Spark Plug Cleaning/Inspection

● Clean the spark plug, preferably in a sandblasting device, and then clean off any abrasive particles. The plug may also be cleaned using a high-flash point solvent and a wire brush or other tool.
★If the spark plug center electrode [A] and/or side electrode [B] are corrected or damaged, or if the insulator [C] is cracked, replace the plug.
● Use the standard spark plug or its equivalent.
● Measure the gap [D] with a wire-type thickness gauge.
★If the gap is incorrect, carefully bend the side electrode with a tool to obtain the correct gap.

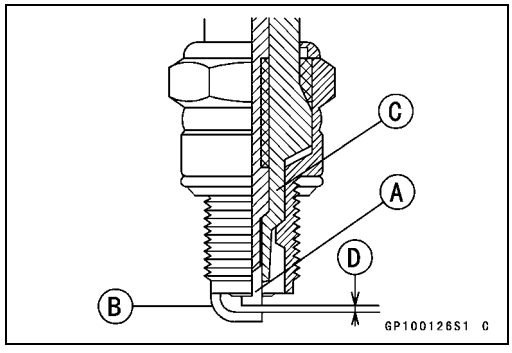

Spark Plug Gap: 0.8 ~ 0.9 mm (0.031 ~ 0.035 in.)

Ignition Coil Primary Peak Voltage

NOTE

○*Be sure the battery is fully charged.*

● Remove the fuel tank (see Fuel System chapter).
● Remove all the spark plug caps but do not remove the spark plugs.
● Install new spark plugs into all the spark plug caps, and ground them onto the engine.

Downloaded from www.vulcanriders-sweden.org

Ignition System

● Install the peak voltage adapter [A] into the hand tester [B].

Special Tool - Hand Tester: 57001-1394

● Connect the adapter between the ignition coil primary lead terminal and the engine ground with the primary lead left connected.

Special Tool - Peak Voltage Adapter: 57001-1415
Type: KEK-54-9-B

○Raise the main harness and coolant hose, and insert the adapter probe into the terminal of the primary lead [C].
ECU [D]
Battery [E]
Ignition Coil [F]
New Spark Plugs [G]

Special Tool - Hand Tester: 57001-1394

Hand Tester Range: × DC 250 V

Primary Lead Connections

	Adapter (R, +)		Adapter (BK, –)
Front Ignition Coil:	**BK**	←→	**Ground**
Rear Ignition Coil:	**BK/G**	←→	**Ground**

⚠ WARNING

To avoid extremely high voltage shocks, do not touch the spark plugs or tester connections.

● Turn the ignition switch and the engine stop switch ON.
● Pushing the starter button, turn the engine 4 ~ 5 seconds with the transmission in neutral to measure the primary peak voltage.
● Repeat the measurements 5 or more times for one ignition coil.

Ignition Coil Primary Peak Voltage
Standard:
Front 129 V or more
Rear 122 V or more

● Repeat the test for the other ignition coil.
★If the reading is less than the specified value, check the following:
Ignition Coils (see Ignition Coil Inspection)
Pickup Coils (see Pickup Coil Inspection)
★If the ignition coils, and pickup coils are normal, check the ECU (see Fuel System chapter).

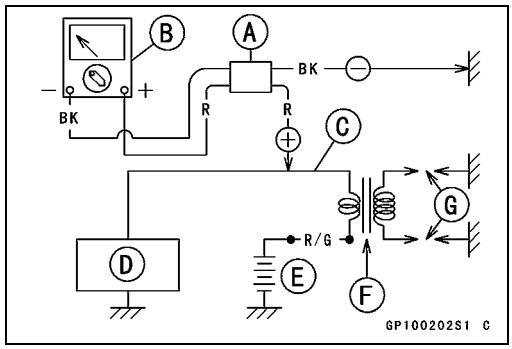

Downloaded from www.vulcanriders-sweden.org

Ignition System

Ignition Timing Inspection

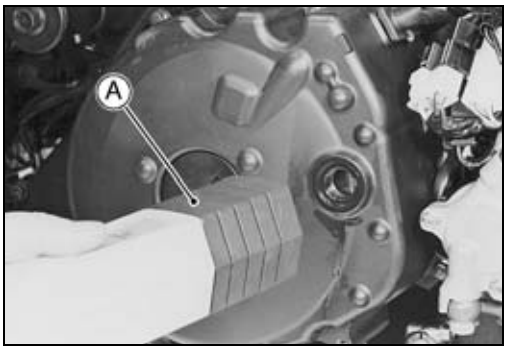

- Remove the alternator outer cover (see Alternator Outer Cover Removal).
- Remove the timing inspection plug.

Special Tool - Filler Cap Driver: 57001-1454

- Attach the timing light [A] to the front ignition coil lead in the manner prescribed by the manufacturer.

Special Tool - Timing Light: 57001-1241

- Start the engine and aim the timing light at the ignition timing mark on the alternator rotor.
- Run the engine at the speeds specified and note the alignment of the ignition timing marks.

Ignition Timing

Engine speed r/min (rpm)	Hole notch [A] aligns with:
950	F or R mark [B] on alternator rotor

F Mark: For front cylinder
R Mark: For rear cylinder

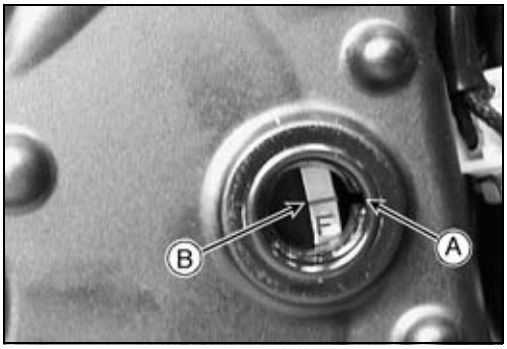

- Repeat the test for the rear cylinder, using the rear ignition coil wire.

★If the ignition timing is incorrect, check the pickup coils (see Pickup Coil Inspection).

★If the pickup coils are normal, check the ECU (see Fuel System chapter).

Pickup Coil Removal

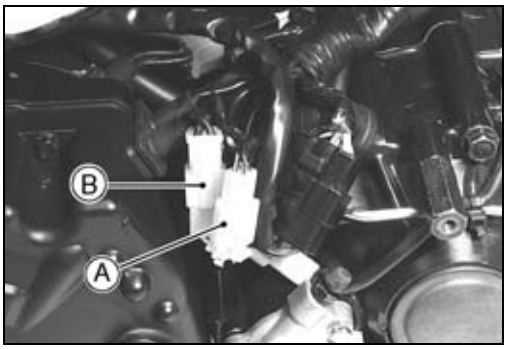

- Remove the alternator outer cover (see Alternator Outer Cover Removal).
- Pull off the pickup coil connector [A] and outside alternator connector [B].

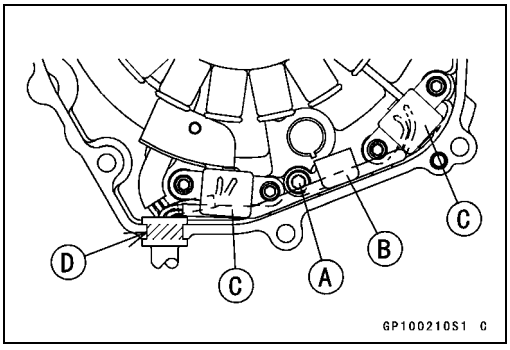

- Remove the alternator cover (see Alternator Cover Removal).
- Unscrew the screw [A] of the pickup coil lead holder [B].
- Unscrew the screws and take off the pickup coils [C] with the grommet [D].

Pickup Coil Installation

○Refer to Alternator Outside Stator Installation.

Downloaded from www.vulcanriders-sweden.org

Ignition System

Pickup Coil Inspection

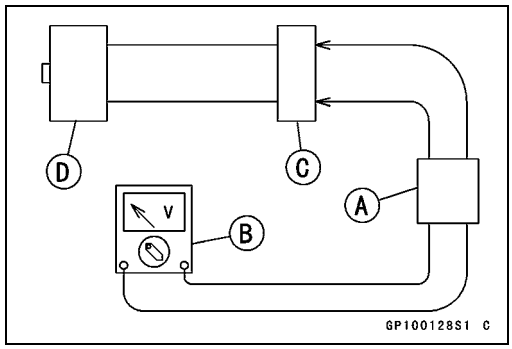

- Remove the alternator outer cover (see Alternator Outer Cover Removal).
- Remove all the spark plug caps but do not remove the spark plugs.
- Disconnect the pickup coil lead connector.
- Connect the peak voltage adapter [A] to the hand tester [B].

Special Tool - Peak Voltage Adapter: 57001-1415
Type: KEK-54-9-B

- Insert the adapter probes into the connector [C] of the pickup coil [D] as shown.

Special Tool - Hand Tester: 57001-1394

Connections

	Adapter (R, +)		Adapter (BK, –)
Front Pickup Coil:	**BK/Y**	⟷	**BK**
Rear Pickup Coil:	**BK/R**	⟷	**BK/W**

NOTE

○*Be sure the battery is fully charged.*

Hand Tester Range: × DC 10 V

- Turn the ignition switch and the engine stop switch ON.
- Pushing the starter button, turn the engine 4 ~ 5 seconds with the transmission in neutral to measure the pickup coil peak voltage.
- Repeat the measurements 5 or more times for one pickup coil.
- Repeat the test for the other pickup coil.

Pickup Coil Peak Voltage
Standard:

Front	**2.2 V or more**
Rear	**2.0 V or more**

★If the reading is less than the specified value, replace the pickup coil.

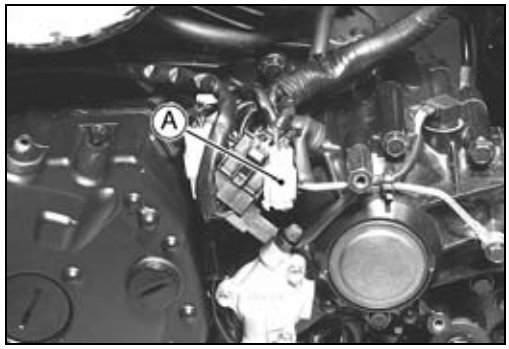

★If the reading is normal, check the ECU (see Fuel System chapter).

★If the peak voltage adapter is not available, the coil can be checked for a broken or badly shorted winding with the hand tester (special tool).

NOTE

○*Using the peak voltage adapter is a more reliable way to determine the condition of the pickup coil than pickup coil internal resistance measurements.*

- Disconnect the pickup coil lead connector [A].

Downloaded from www.vulcanriders-sweden.org

Ignition System

● Set the hand tester [A] to the × 100 Ω range and lead it to the pickup coil lead connector [B].

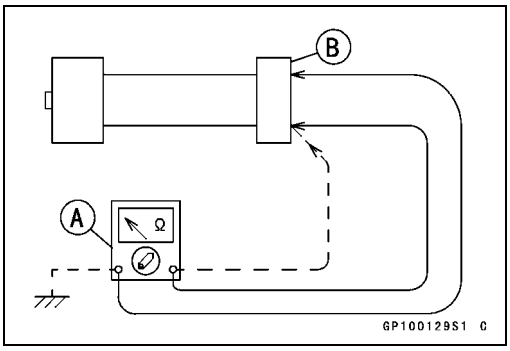

Connections

	Tester Connections		
Front Pickup Coil:	**BK/Y**	⟷	**BK**
Rear Pickup Coil:	**BK/R**	⟷	**BK/W**

★If there is more resistance than the specified value, the coil has an open lead and must be replaced. Much less than this resistance means the coil is shorted, and must be replaced.

Pickup Coil Resistance: 380 ~ 560 Ω

● Using the highest resistance range of the tester, measure the resistance between the pickup coil leads and chassis ground.

★Any tester reading less than infinity (∞) indicates a short, necessitating replacement of the pickup coil assy.

IC Igniter Inspection

○The IC igniter is buit in the ECU [A].
Battery Case [B]
Rib [C]
Front [D]

○Refer to Fuel System chapter for ECU Inspection.

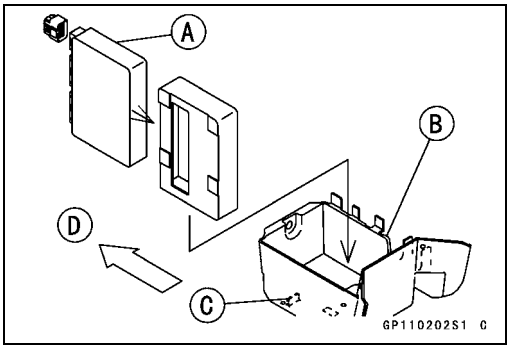

Downloaded from www.vulcanriders-sweden.org

Ignition System

IC Igniter in ECU Troubleshooting

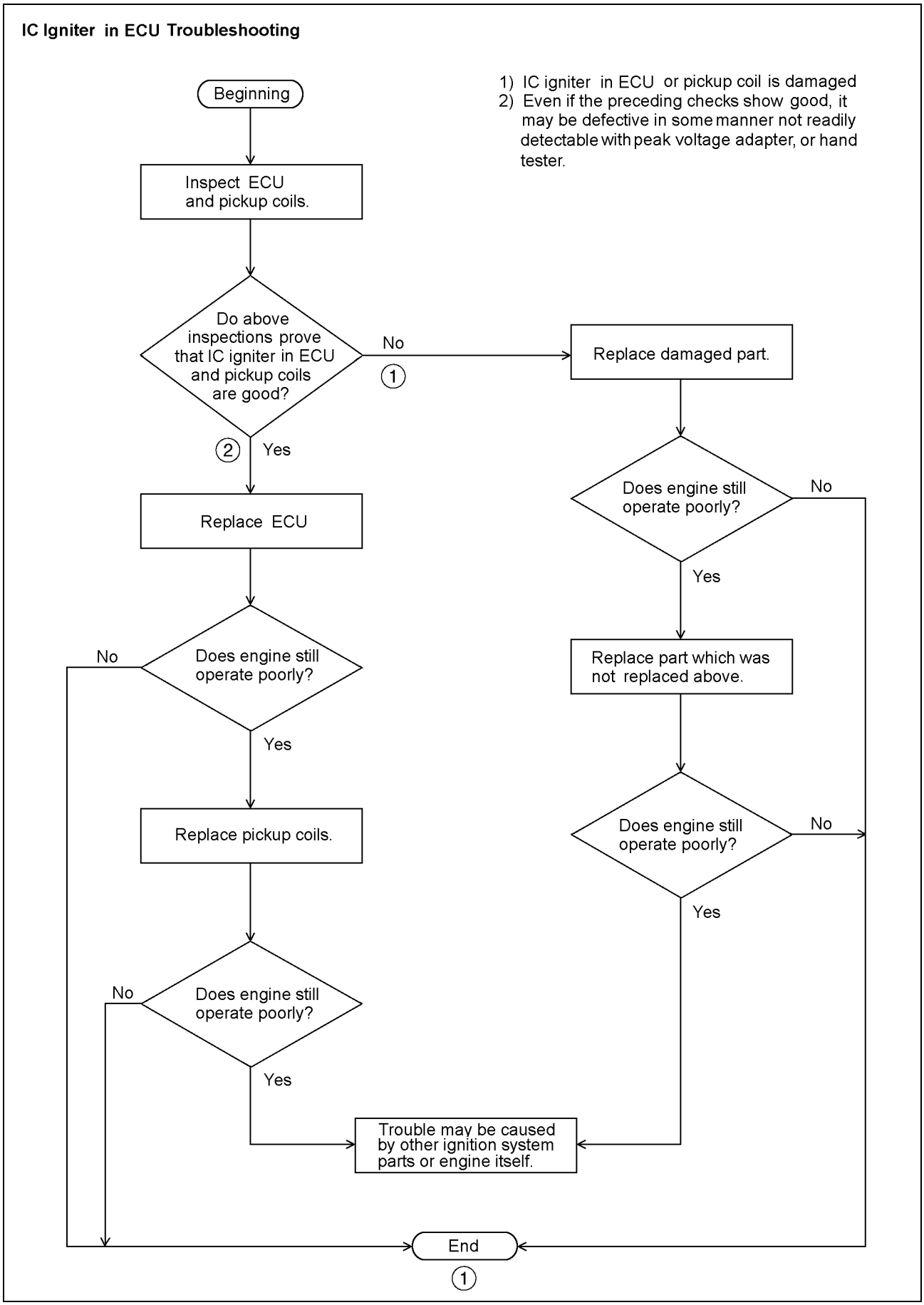

Downloaded from www.vulcanriders-sweden.org

Starter Motor

Removal

- Unscrew the bracket bolts [A] and take off the regulator/rectifier [B] with its bracket [C].

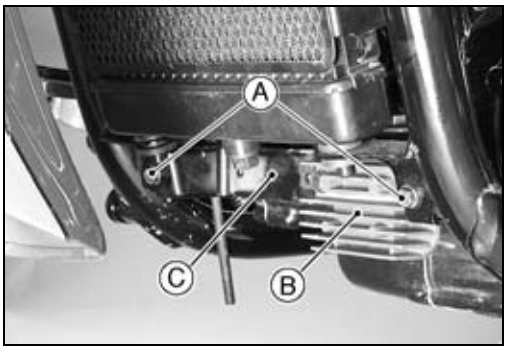

- Remove:
  Starter Motor Terminal Nut and Cable [A]
  Starter Motor Bolts [B]

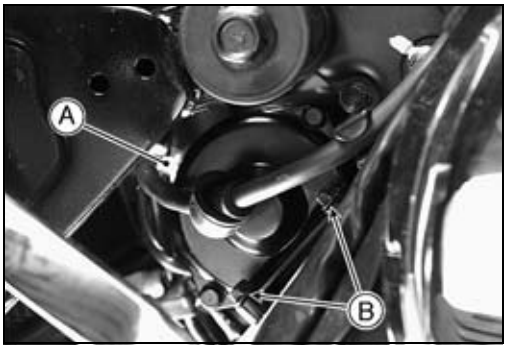

- Pull the starter motor [A] toward the left and remove it.

CAUTION

Never drop the starter motor, especially on a hard surface.
Such a shock to the motor can damage it.

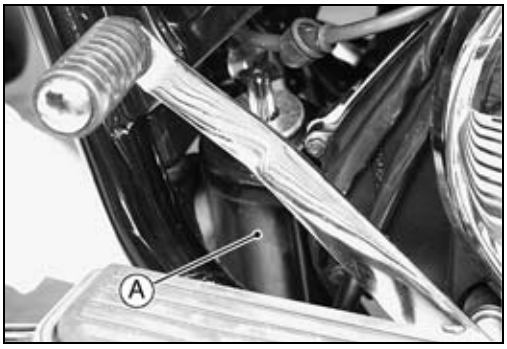

Installation

CAUTION

Do not tap the starter motor shaft or body. Tapping the shaft or body could damage the motor.

- When installing the starter motor, clean the starter motor legs [A] and crankcase [B] where the starter motor is grounded.

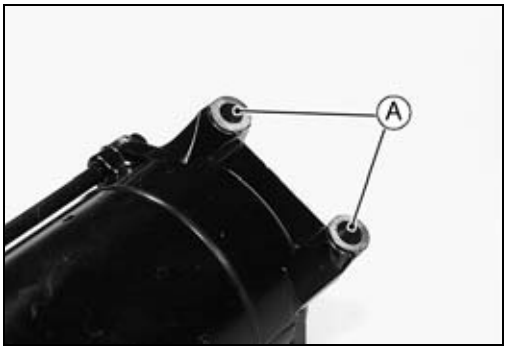

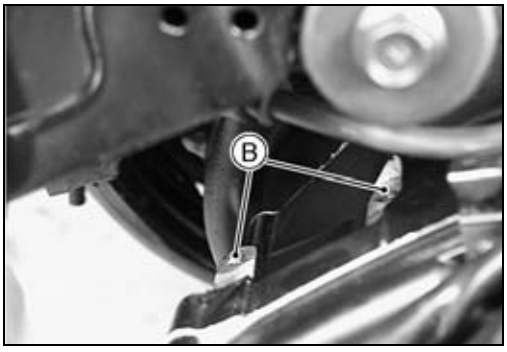

Downloaded from www.vulcanriders-sweden.org

Starter Motor

- Replace the O-ring [A] with a new one.
- Apply a small amount of engine oil to the O-ring.
- Tighten:

Torque - Starter Motor Mounting Bolts: 9.8 N·m (1.0 kgf·m, 87 in·lb)
Starter Motor Terminal Nut: 4.9 N·m (0.50 kgf·m, 43 in·lb)

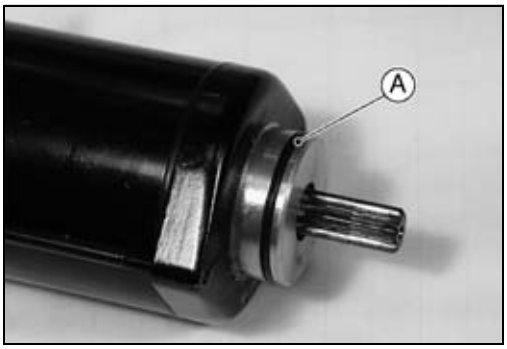

Disassembly

- Remove the starter motor (see this section).
- Take off the starter motor assy bolts [A] and remove both end covers [B] and pull the armature out of the yoke.

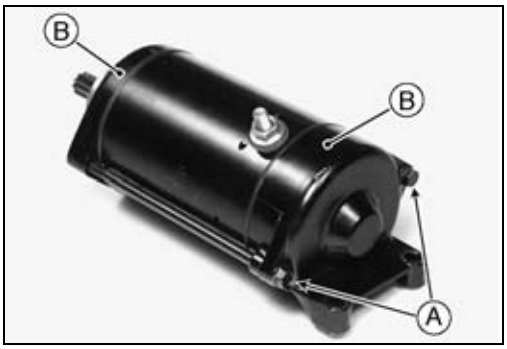

- Take the positive carbon brushes [B] out of the brush holders [A].
- Take off the brush plate [C] with brush wire from the yoke.

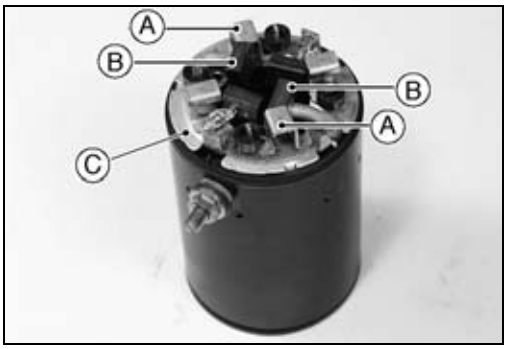

- Unscrew the terminal locknut [B] and remove the terminal bolt [A].
- Take the positive carbon brushes and wire assy [C] out of the yoke.

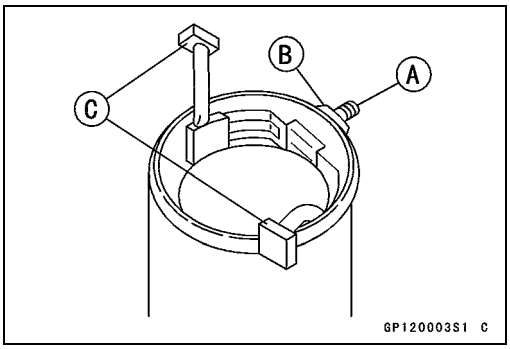

NOTE

○*Do not remove the negative carbon brushes [A] from the brush plate [B].*

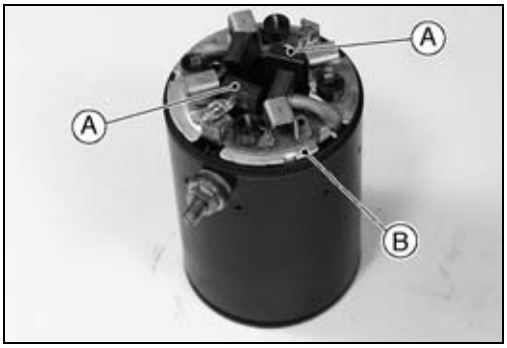

Downloaded from www.vulcanriders-sweden.org

Starter Motor

Assembly

- Holding the springs [A] with plastic washers [B], insert the brushes.

○Fit the brush wire into the holder groove.

- Align the tang [C] with the terminal bolt [D].

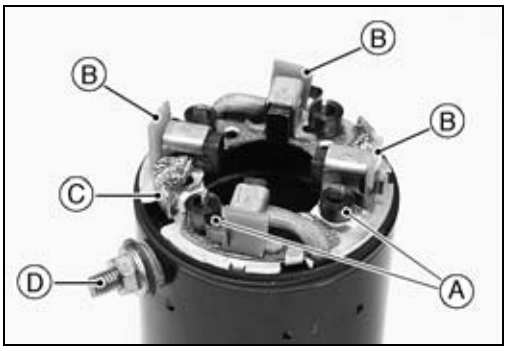

- Put the armature [A] among the brushes, and remove the plastic washers [B].

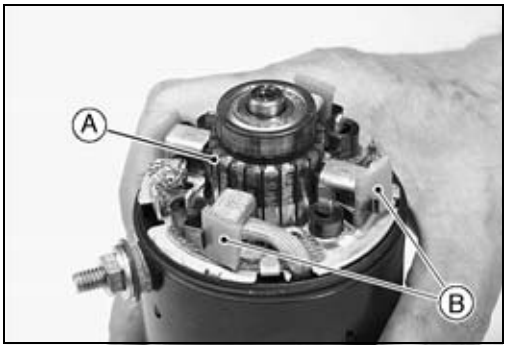

- Fit the tang [A] of the brush plate into the left end cover groove [B].

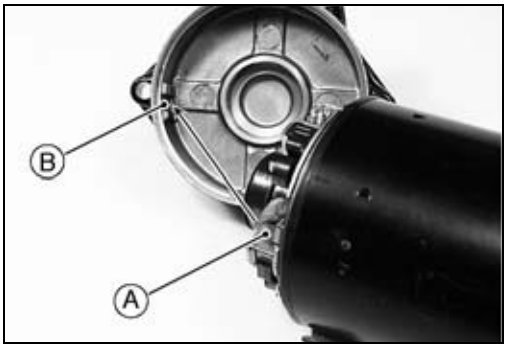

- Apply a thin coat of grease to the oil seal [B] in the right end cover [A].

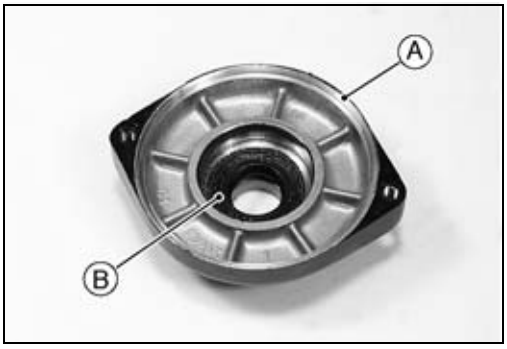

- Apply a thin coat of grease to the left bearing [A].
- Fit shims onto the right end cover.



Downloaded from www.vulcanriders-sweden.org

Starter Motor

○The line on the yoke should align [A] with the line on the left cover.

● Tighten:

Torque - Starter Motor Assy Bolts: 4.9 N·m (0.50 kgf·m, 43 in·lb)

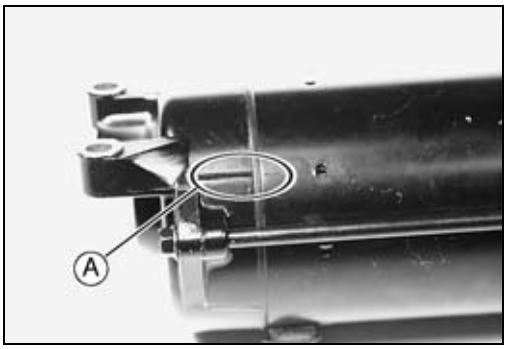

Brush Inspection

● Measure the length [A] of each brush.

★If any is worn down to the service limit, replace the carbon brush holder assy [B] and the terminal bolt assy [C].

Starter Motor Brush Length

Standard: 12 mm (0.47 in.)

Service Limit: 8.5 mm (0.33 in.)

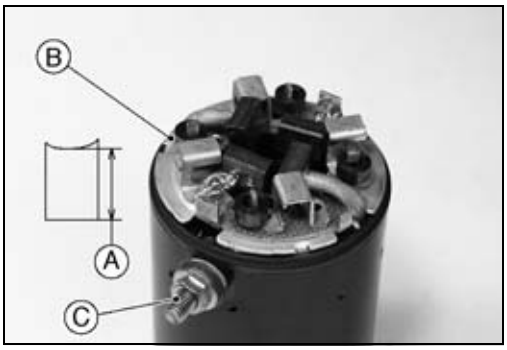

Commutator Cleaning and Inspection

● Smooth the commutator surface [A] if necessary with fine emery cloth [B], and clean out the grooves.

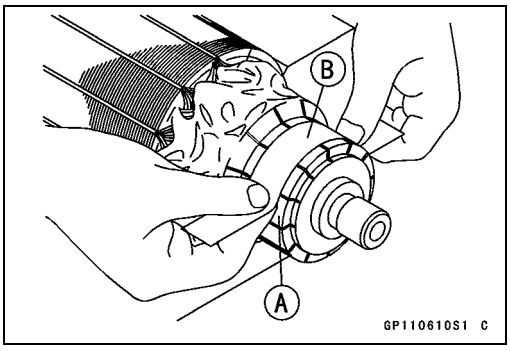

● Measure the diameter [A] of the commutator [B].

★Replace the starter motor with a new one if the commutator diameter is less than the service limit.

Commutator Diameter

Standard: 28 mm (1.10 in.)

Service Limit: 27 mm (1.06 in.)

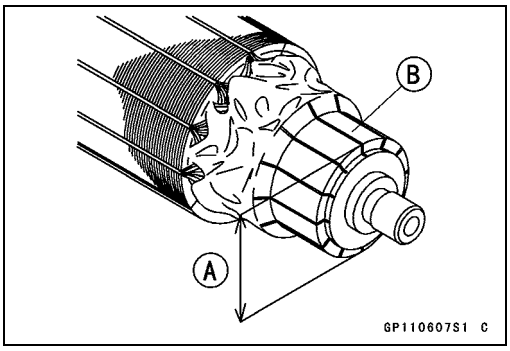

Armature Inspection

● Using the × 1 Ω hand tester range, measure the resistance between any two commutator segments [A].

★If there is a high resistance or no reading (∞) between any two segments, a winding is open and the starter motor must be replaced.

● Using the highest hand tester range, measure the resistance between the segments and the shaft [B].

★If there is any reading at all, the armature has a short and the starter motor must be replaced.

Special Tool - Hand Tester: 57001-1394

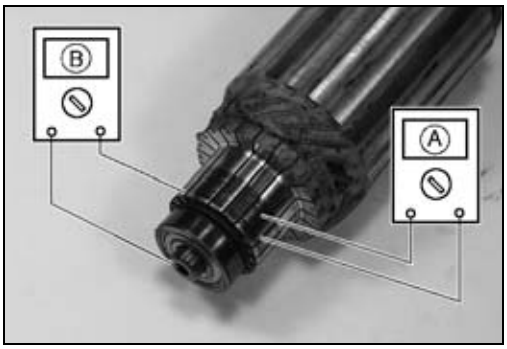

Downloaded from www.vulcanriders-sweden.org

Starter Motor

NOTE

○*Even if the foregoing checks show the armature to be good, it may be defective in some manner not readily detectable with the hand tester. If all other starter motor components and starter motor circuit components check good, but the starter motor still does not turn over or only turns over weakly, replace the starter motor with a new one.*

Brush Wire Inspection

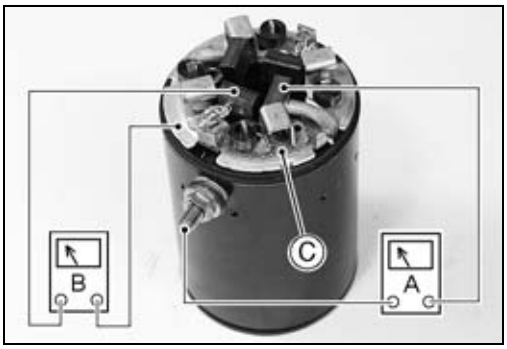

- Using the × 1 Ω hand tester range, measure the resistance as follows.
  Terminal Bolt and Positive Brushes [A]
  Brush Plate and Negative Brushes [B]
  Plastic [C]

○The reading should be zero.

★If there is not close to zero ohms, the brush lead has an open. Replace the terminal bolt assembly and the brush holder assembly.

Brush Plate and Terminal Bolt Inspection

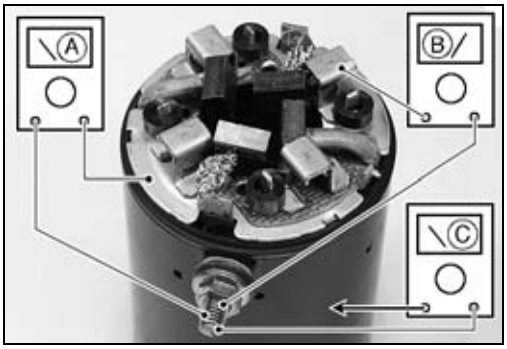

- Using the highest hand tester range, measure the resistance as shown.
  Terminal Bolt and Brush Plate [A]
  Terminal Bolt and Negative Brush Holders [B]
  Terminal Bolt and Yoke [C]

○The reading should be infinite (∞ Ω).

★If there is any reading, the brush holder assembly and/or terminal bolt assembly have a short. Replace the brush holder assembly and the terminal bolt assembly.

Starter Relay Inspection

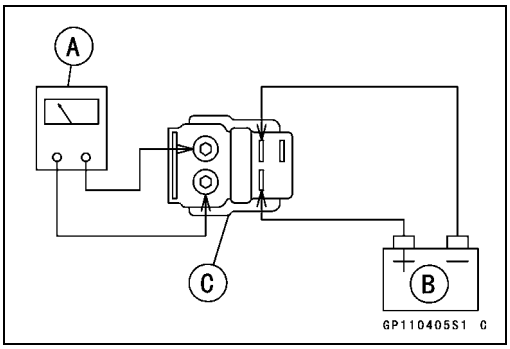

- Remove the right side covers (see Frame chapter).
- Remove the coolant reserve tank, then the starter relay.
- Connect the hand tester [A] and 12 V battery [B] to the starter relay [C] as shown.

★If the relay does not work as specified, the relay is defective. Replace the relay.

Special Tool - Hand Tester: 57001-1394

Testing Relay

Tester Range:	**× 1 Ω range**
Criteria:	**When battery is connected → 0 Ω**
	When battery is disconnected → ∞ Ω

Downloaded from www.vulcanriders-sweden.org

Starter Motor

Electric Starter Circuit

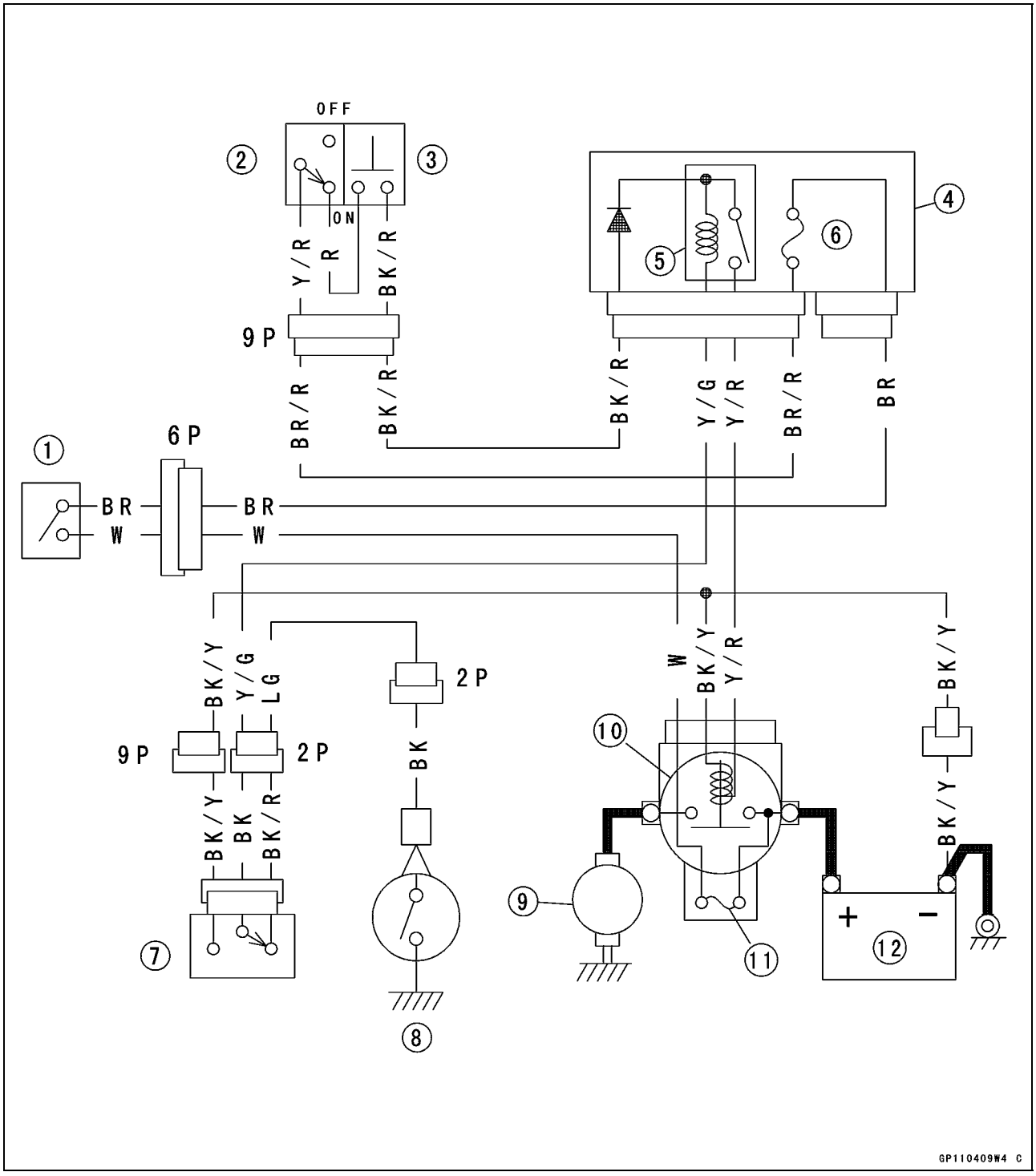

1. Ignition Switch
2. Engine Stop Switch
3. Starter Button
4. Junction Box
5. Starter Circuit Relay
6. Ignition Fuse 10 A
7. Starter Lockout Switch
8. Neutral Switch
9. Starter Motor
10. Starter Relay
11. Main Fuse 30 A
12. Battery

Downloaded from www.vulcanriders-sweden.org

Lighting System

US, Canada, and Australia models have a full-time headlight system with a headlight relay in the junction box. In these models, the headlight does not go on when the ignition switch and the engine stop switch are first turned on. The headlight comes on when the engine starts running and stays on even if the engine stalls. The headlight goes out when the ignition switch is turned off. It also goes out while the starter button is depressed.

Headlight Beam Horizontal Adjustment

- Turn the horizontal adjuster [A] on the headlight with a screwdriver in or out until the beam points straight ahead.
  - Turn the adjuster clockwise to face the headlight to the left.



Headlight Beam Vertical Adjustment

- Turn the vertical adjuster [A] in the headlight in or out with a screwdriver to adjust the headlight vertically.
  - Turn the adjuster clockwise to face the headlight up.



NOTE

- *ON high beam, the brightest points should be slightly below horizontal with the motorcycle on its wheels and the rider seated. Adjust the headlight to the proper angle according to local regulations.*
- *For US model, the proper angle is 0.4 degrees below horizontal. This is 50 mm (2 in.) drop at 7.6 m (25 ft.) measured from the center of the headlight with the motorcycle on its wheels and the rider seated.*

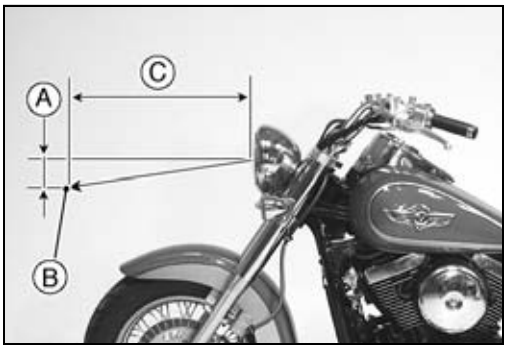

50 mm (2 in.) [A]
Center of Brightest Spot [B]
7.6 m (25 ft.) [C]

Headlight Bulb Replacement

- Remove the headlight rim screws [A] on both sides.



Downloaded from www.vulcanriders-sweden.org

Lighting System

- Pull the headlight unit and drop it out.
- Pull the headlight connector [A].
- Remove the headlight dust cover.

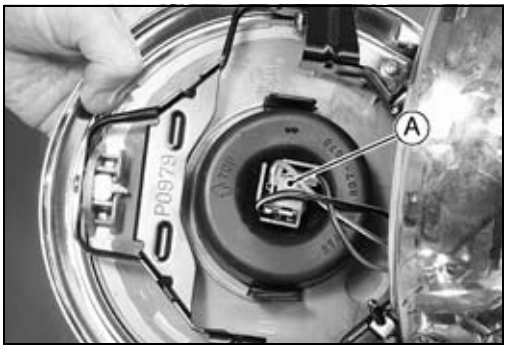

- Push the hook [A] to unlock.



- Take out the bulb [A].

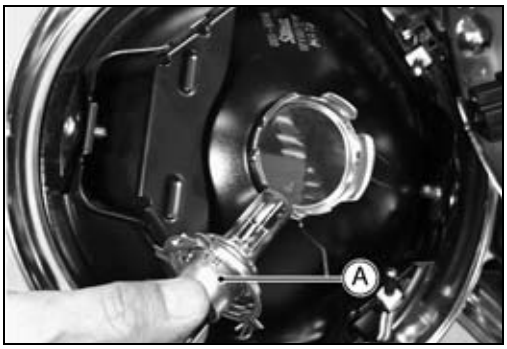

CAUTION

When handling the quartz-halogen bulb, never touch the glass portion with bare hands. Always use a clean cloth. Oil contamination from hands or dirty rags can reduce bulb life or cause the bulb to explode.

○Clean off any contamination that inadvertently gets on the bulb with alcohol or a soap and water solution.

- Replace the headlight bulb.
- Fit the dust cover [A] with the TOP mark [B] upward onto the bulb [C] firmly as shown.
  Good [D]
  Bad [E]
- Tighten:

  Torque - Headlight Rim Screws: 1.0 N·m (0.10 kgf·m, 9 in·lb)

- After installation, adjust the headlight aim (see Headlight Beam Adjustment).

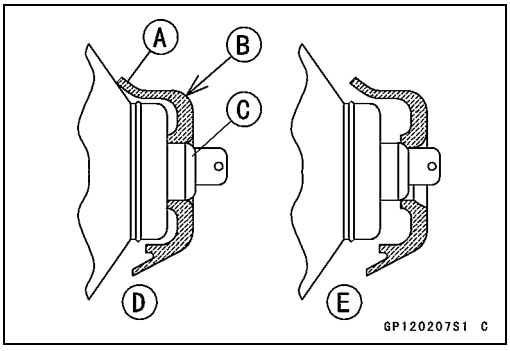

Headlight Body Removal

- Remove the headlight rim screws [A].
- Pull the headlight unit and drop it out.



Downloaded from www.vulcanriders-sweden.org

Lighting System

- Disconnect the wiring connectors [A].
- Remove the headlight body bolts and nuts [B], then take off the body [C].

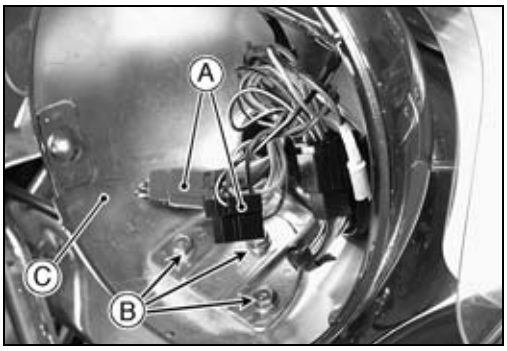

Tail/Brake Light Bulb Replacement

- Take out the screws [A] in the taillight lens.
- Pull the lens [B] off.



- Push the bulb in [A], turn it counterclockwise [B], and pull it out.
- Replace the bulb with a new one.



- With the front pin [A] up and the rear pin [B] down, insert the new bulb by aligning the front pin with the left groove [C] in the walls of the socket [D].
- Push the bulb in, turn it clockwise, and release it. It should lock in position.
- Tighten the lens screws. Be careful not to overtighten them.

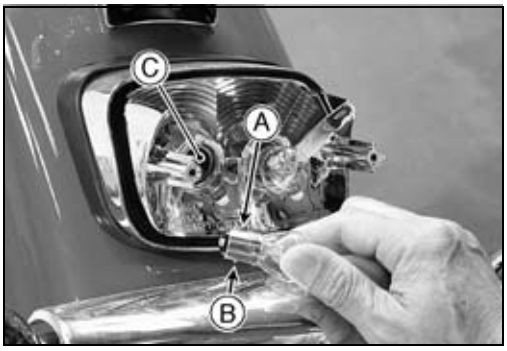

Downloaded from www.vulcanriders-sweden.org

Lighting System

Headlight Circuit (Except for Australia, Canada, and U.S.)

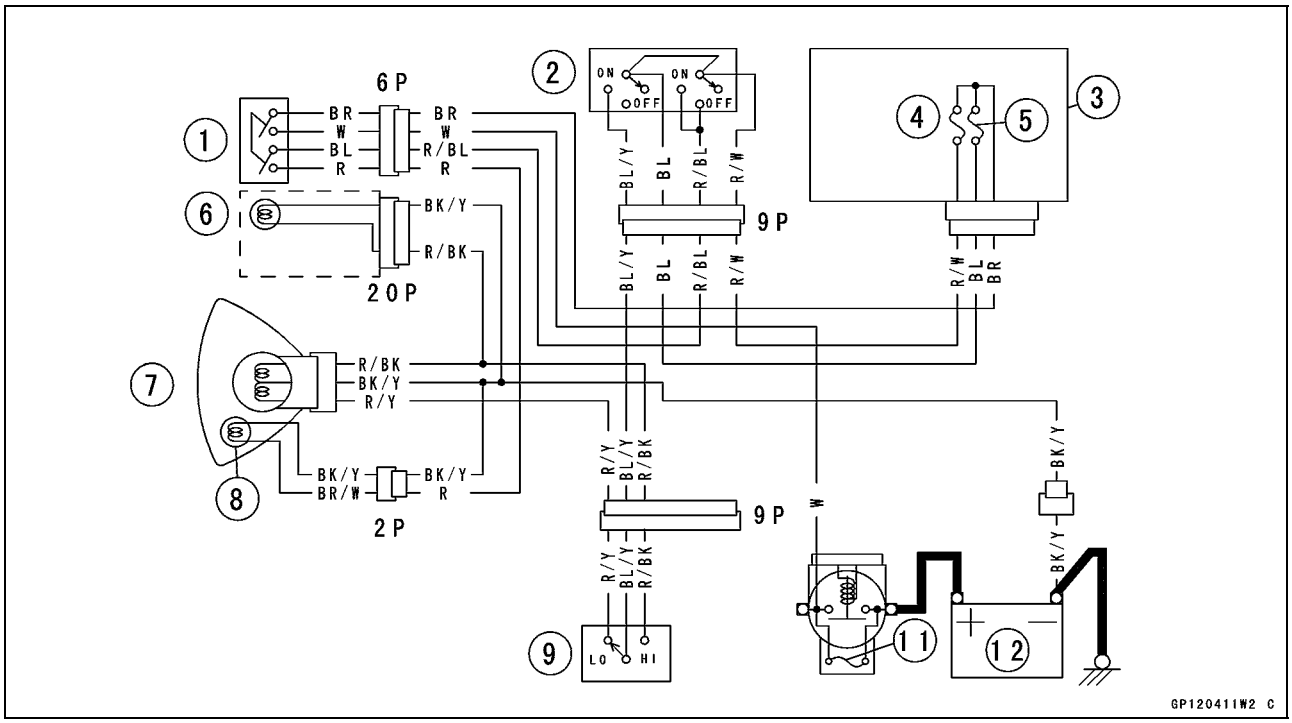

Headlight Circuit (Australia, Canada, and U.S.)

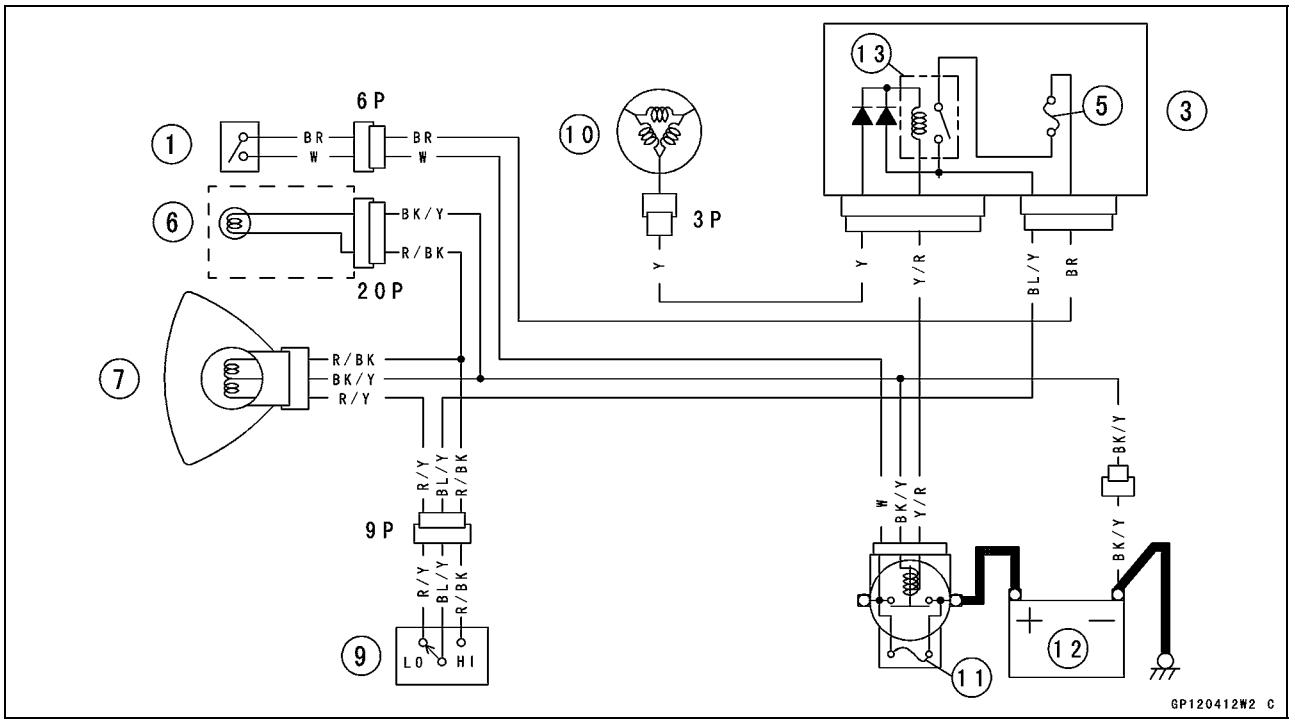

1. Ignition Switch
2. Headlight Switch
3. Junction Box
4. Taillight Fuse 10 A
5. Headlight Fuse 10 A
6. High Beam Indicator Light
7. Headlight
8. City Light
9. Dimmer Switch
10. Alternator
11. Main Fuse 30 A
12. Battery
13. Headlight Relay

Downloaded from www.vulcanriders-sweden.org

Automatic Turn Signal Canceling System

Automobiles use a turn signal canceling system actuated by steering wheel turn. But, motorcycles turn with a bank additionally, and so have a smaller steer angle. This makes difficult to adopt an automobile type turn signal canceling system because of inaccurate operation in motorcycles. So, motorcycles adopt time & distance counting system.

The canceling system consists of a battery, turn signal control unit, distance sensor, and turn signal switch. When the turn signal switch is pushed onto the right or left, the turn signals start flashing and the control unit starts counting off **8 seconds**. At the end of this time, the control unit starts calculating distance traveled using pulses from the distance sensor in the speedometer. The contorol unit keeps working even after the turm signal switch was released and returned to the neutral position by spring force. When the motorcycle has traveled an additional **65 meters**, the control unit shuts off the current, turns off the turn signal lights, and resets itself.

★If the turn signal canceling system does not function properly, first check all the wiring connections carefully.

- Secondly, inspect the distance sensor.
- Thirdly, inspect the turn signal switch in the left handlebar switch.
- Lastly, check the turn signal control unit.

Turn Signal Cancelling System

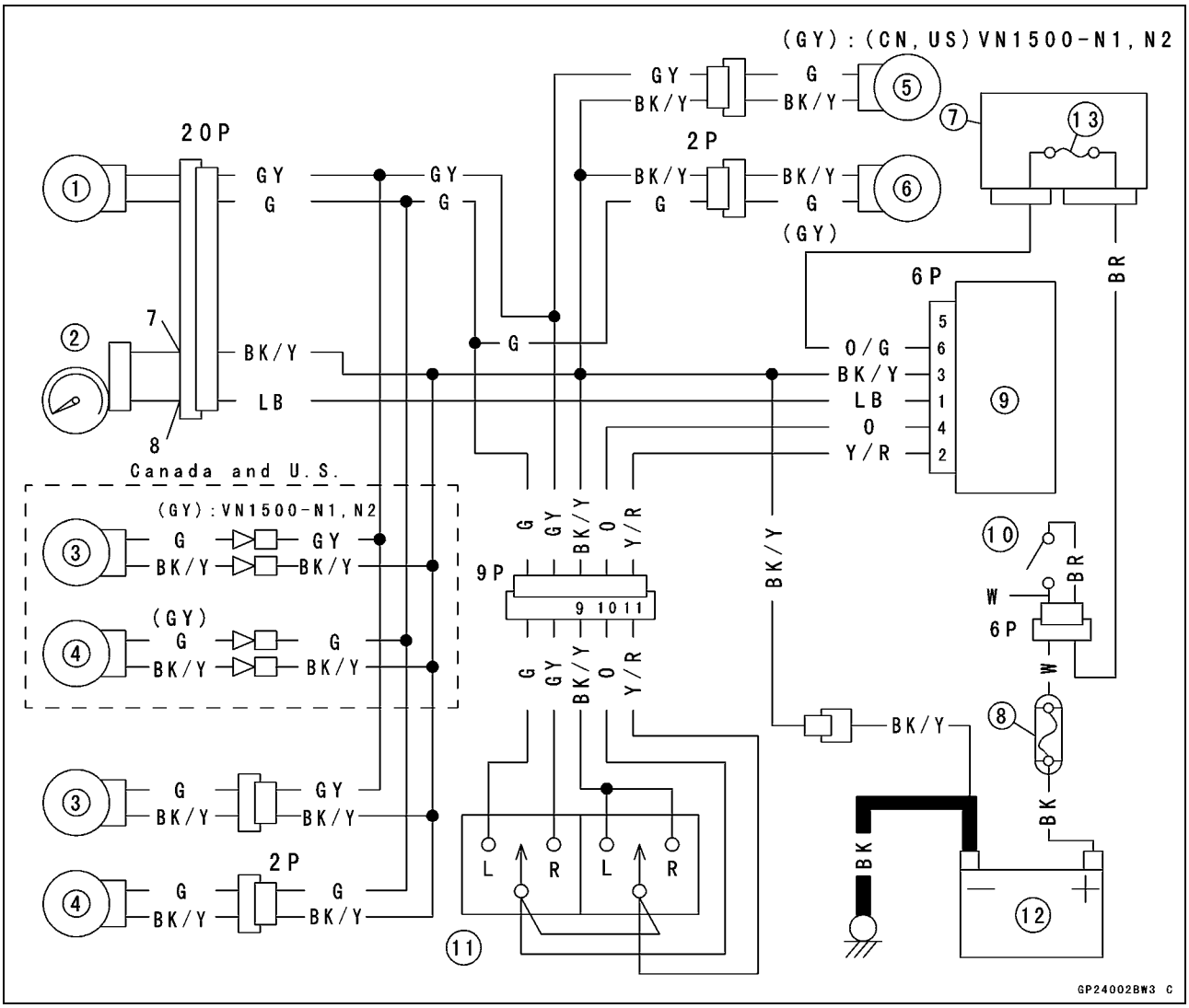

1. Turn Signal Indicator Light
2. Distance Sensor
3. Front Right Turn Signal Light
4. Front Left Turn Signal Light
5. Rear Right Turn Signal Light
6. Rear Left Turn Signal Light
7. Junction Box
8. Main Fuse 30 A Starter Relay
9. Turn Signal Control Unit
10. Ignition Switch
11. Turn Signal Switch
12. Battery
13. Turn Signal Control Unit Fuse 10 A

Downloaded from www.vulcanriders-sweden.org

Automatic Turn Signal Canceling System

Wiring Inspection

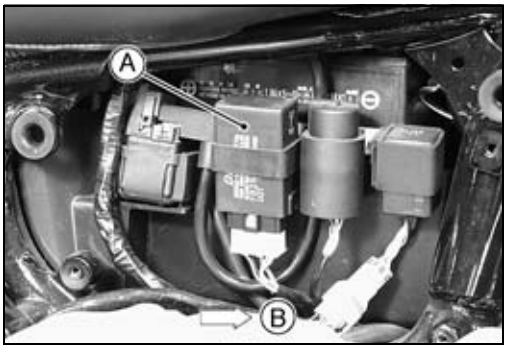

- Connect all the connectors.
- Remove the right side cover (see Frame chapter).
- Remove the coolant reserve tank bolts and hanging reserve tank.
- Remove the turn signal control unit [A].
  Front [B]
- Pull off the 6-pin connector of the unit, the 20-pin meter connector under the meter unit, and the 9-pin left handlebar switch connector in the head light housing.
- Make sure all connector terminals are clean and tight, and none of them have been bent.

○Clean the dirty terminals, and straighten slightly-bent terminals.

- Check conductivity or voltage of the numbered terminals with the hand tester.

○The terminal numbers are shown in the wiring diagram of Turn Signal Canceling System.

Special Tool - Hand Tester: 57001-1394

Wiring Inspection

Connectors	Tester Connection	Tester Reading
Turn Signal Control Unit ←→ Distance Sensor	1-8 3-7	0 Ω
Turn Siganl Control Unit ←→ Left Handlebar Switch	2-11 3-9 4-10	
Turn Signal Control Unit ←→ Battery	6-Battery (–)	Battery Voltage with IG. Switch. ON 0 V with IG.Switch. OFF

IG. Switch.: Ignition Switch

★If any one of the hand tester readings shows an improper values, check the wiring and connections of the turn signal switch, distance sensor, and turn signal control unit. Check the turn signal control unit (see Turn Signal Control Unit Inspection) if all of them turn out good.

Distance Sensor Inspection

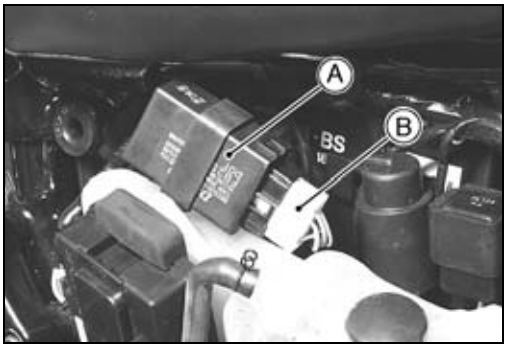

- Remove the right side cover (see this chapter).
- Remove the coolant reserve tank and hanging it.
- Remove the turn signal control unit [A].

○Do not disconnect the connector [B].

- Use the jack and the attachment jack to lift the rear wheel.

Special Tools - Jack: 57001-1238
Attachment Jack: 57001-1398

Downloaded from www.vulcanriders-sweden.org

Automatic Turn Signal Canceling System



- Set the hand tester to the DC25 V range and connect it to the LB wire terminal [A] and battery (–) terminal as shown.

Connections
Hand Tester (+) → LB Wire Terminal
Hand Tester (–) → Battery (–) Terminal

- Turn the rear wheel slowly to see that the tester's pointer fluctuates by repeated reading 0.5 V and 12 V.

★If the tester's pointer fluctuates, distance sensor is normal.

★If the tester's pointer does not fluctuate, inspect the speed sensor and turn signal control unit. If the speed sensor and control unit are good, replace the meter unit.

Turn Signal Switch Inspection

- Open the headlight housing.
- Unplug the 9-pin connectors that leads to the left handlebar switch.
- Check the turn signal switch connections according to the table.

★If the switch has an open circuit or a short, it can be disassembled for repair. The contact surfaces may be cleaned, but no internal parts are available for replacement.

★If any parts are not repairable, the left handlebar switch must be replaced as a unit.

Turn Signal Switch Connections

Color	G	O	GY	BK/Y	Y/R
L (left)	●	●		●	●
OFF (push)					
R (right)		●	●	●	●

Downloaded from www.vulcanriders-sweden.org

Automatic Turn Signal Canceling System

Turn Signal Control Unit Inspection

CAUTION

Never drop the turn signal control unit, especially on a hard surface. Such a shock to the unit can damage it.

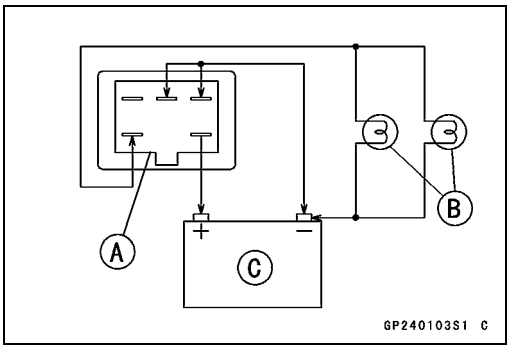

- Remove the right side cover (see Frame chapter).
- Connect one 12 V battery and turn signal lights as indicated in the figure, and count how many times the lights flash for one minute.
  Turn Signal Control Unit Connector [A]
  Turn Signal Lights [B]
  12 V Battery [C]

★If the lights do not flash as specified, replace the turn signal control unit.

Testing Turn Signal Control Unit Inspection

Load		Flashing Times (c/m*)
The Number of Turn Signal Lights	Wattage (W)	
1**	21 ~ 23	140 ~ 250
2	42 ~ 46	75 ~ 95

(*): Cycle(s) per minute
(**): corresponds to “one light burned out, and the other lights stay ON”.

NOTE

○*Even if the foregoing checks show the turn signal control unit to be good, it may be defective in some manner especially for automatic turn signal canceling operation not readily detectable with above checks. If all other checks are good, replace the turn signal control unit.*

Turn Signal Light Bulb Replacement

- Remove the turn signal light lens screws [A] and take off the lens [B].

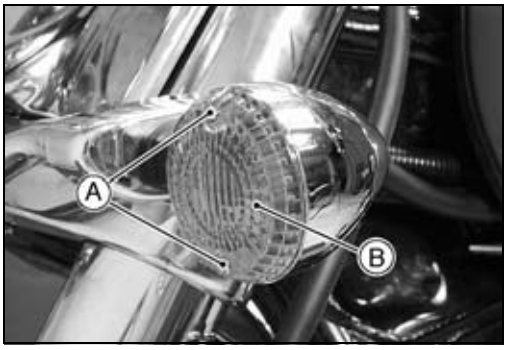

- Push the bulb [A] in the socket and turn the bulb counterclockwise [B] and remove it [C].
- Replace the bulb.



Downloaded from www.vulcanriders-sweden.org

Automatic Turn Signal Canceling System

- With the front pin [A] up and the rear pin [B] down, insert the new bulb by aligning the rear pin with the groove in the walls of the socket [C].
- Tighten:

Torque - Turn Signal Light Lens Screws: 1.0 N·m (0.10 kgf·m, 9 in·lb)

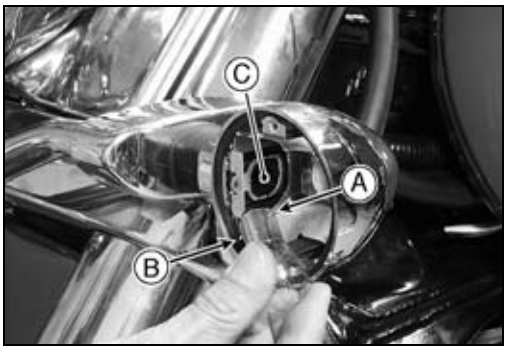

Downloaded from www.vulcanriders-sweden.org

Radiator Fan System

⚠ WARNING

The radiator fan is connected directly to the battery. The fan may start even if the ignition switch is off. NEVER TOUCH THE RADIATOR FAN UNTIL THE RADIATOR FAN CONNECTOR IS DISCONNECTED. TOUCHING THE FAN BEFORE THE CONNECTOR IS DISCONNECTED COULD CAUSE INJURY FROM THE FAN BLADES.

Fan System Circuit Inspection

- Disconnect the leads from the radiator fan switch [A].
- Using an auxiliary lead [B], connect the radiator fan switch leads.

★If the fan rotates, inspect the fan switch.

★If the fan does not rotate, inspect the following.

Leads and Connectors
Main Fuse and Fan Fuse
Fan Motor
Front [C]

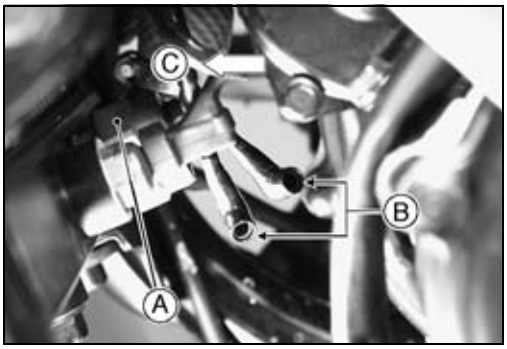

Fan Motor Inspection

- Remove the fuel tank (see Fuel System chapter).
- Disconnect the leads [A] from the radiator fan switch [B].
- Using an auxiliary lead [C], supply battery power to the fan motor.

★If the fan does not rotate, the fan motor is defective and must be replaced.

Battery [D]

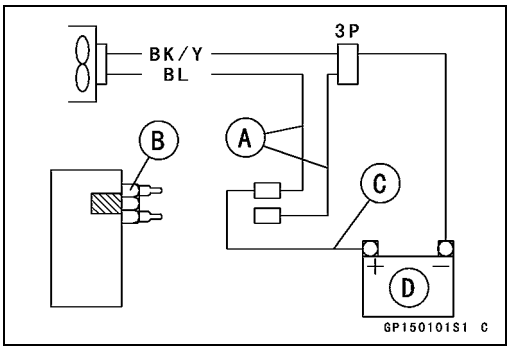

Radiator Fan Circuit

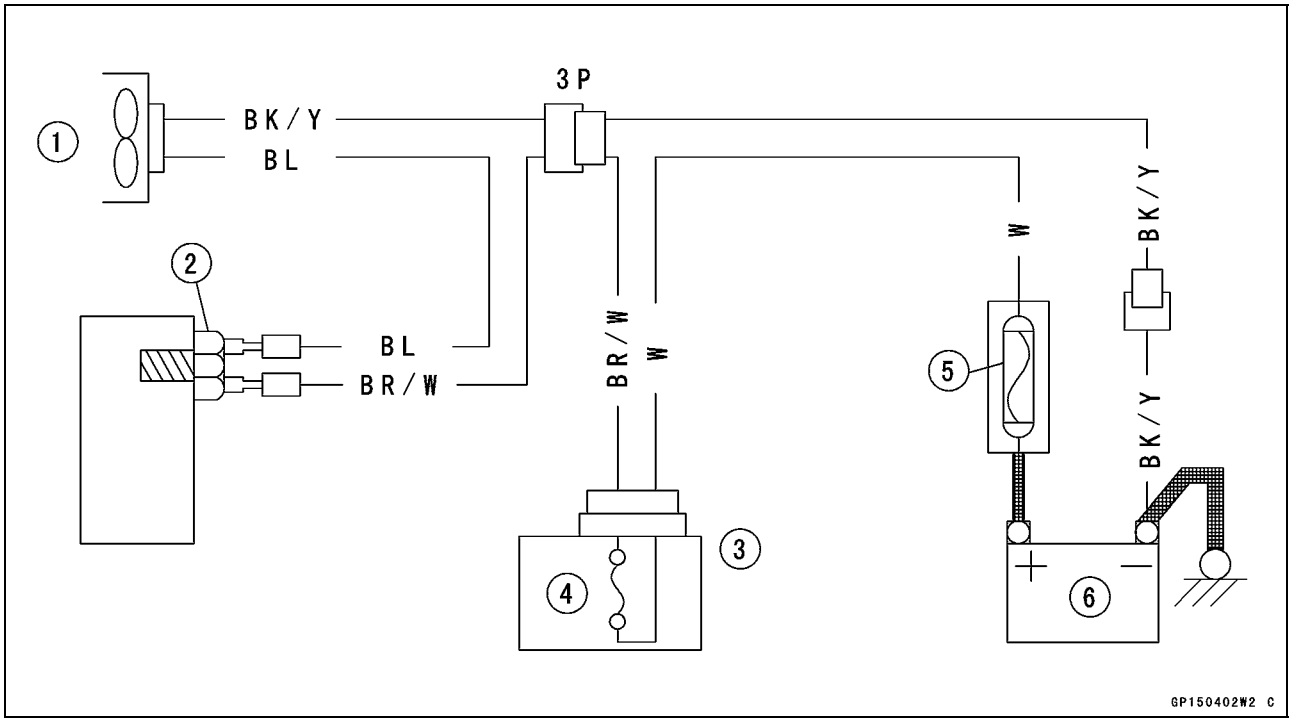

1. Radiator Fan
2. Radiator Fan Switch
3. Junction Box
4. Fan Fuse 10 A
   Fan Fuse 15 A (VN1500-N4 ~)
5. Main Fuse 30 A
6. Battery 12 V 18 Ah

Downloaded from www.vulcanriders-sweden.org

Oil Pressure Warning System

Motorcycle operation with low engine oil level, even if it is higher than the lower level line, will cause oil level change when sudden acceleration, or deceleration, and may lead flicker of the oil pressure warning light because of too rapid response of the oil pressure switch. To improve this operation, the oil pressure light delay unit is adopted, which prevents flicker of the oil pressure warning light by delaying its lighting.

Oil Pressure Warning System

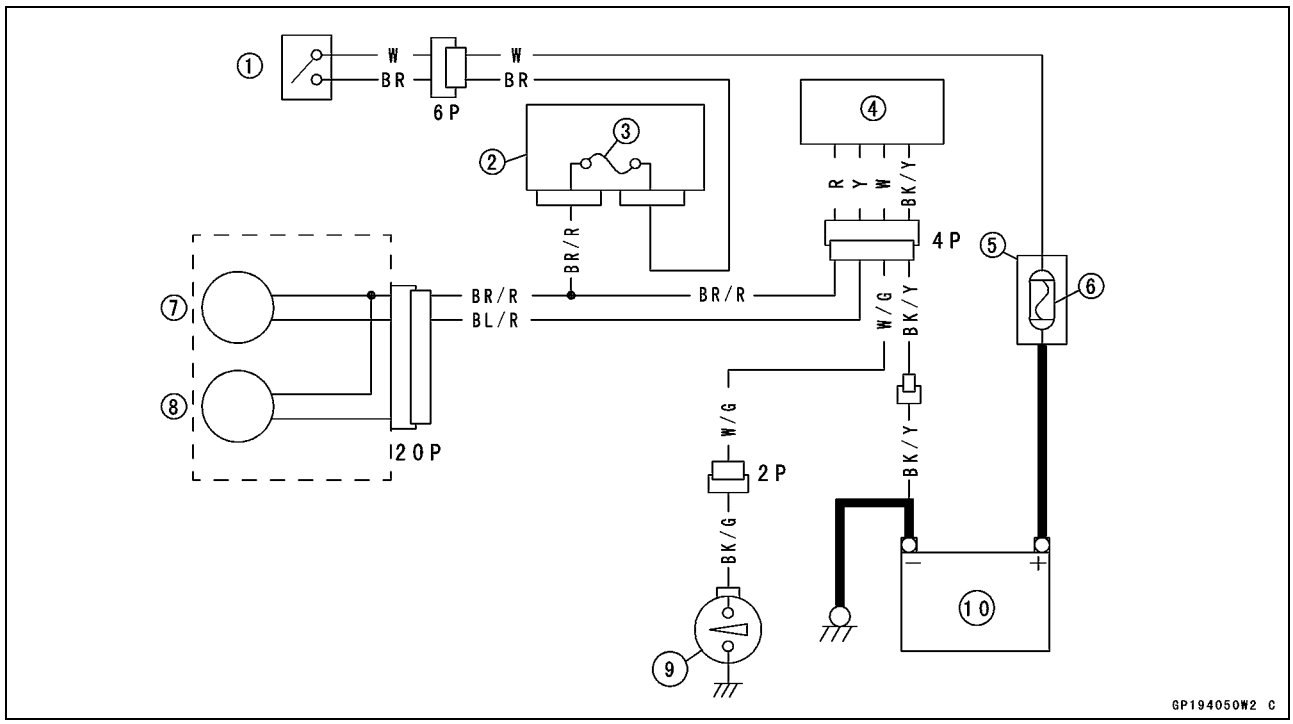

1. Ignition Switch
2. Junction Box
3. Ignition Fuse 10 A
4. Oil Pressure Light Delay Unit
5. Starter Relay
6. Main Fuse 30 A
7. Oil Pressure Warning LED Light
8. Speedometer Unit
9. Oil Pressure Switch
10. Battery 12 V 18 Ah

Oil Pressure Light Delay Unit Removal

- Remove the right side cover (see Frame chapter).
- Remove the coolant reserve tank [A].
- Pull the connectors out of the oil pressure light delay unit [B].

Front [C]

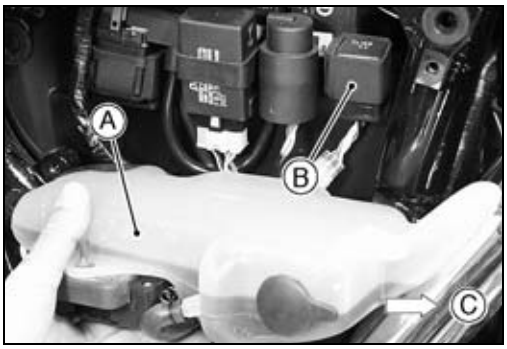

Oil Pressure Light Delay Unit Inspection

- Disconnect the lead [A] of the oil pressure switch [B] and ground [C] it to the engine, using an auxiliary lead.
- Turn the ignition switch [D] ON.

★If the oil pressure warning LED light [E] is lit, replace the oil pressure switch.

★If the warning LED light is not lit, check the warning LED light bulb and wiring (see Meter Unit Inspection).

★If the LED light and wiring are good, replace the oil pressure light delay unit [F].

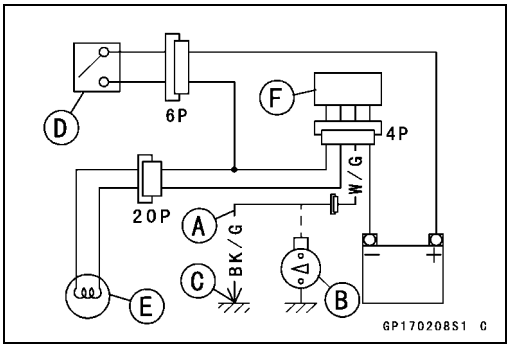

Downloaded from www.vulcanriders-sweden.org

Oil Pressure Warning System

- Turn the ignition switch ON.
- Ground the oil pressure switch lead to the engine, then the oil pressure warning LED light should be lit with a delay.
- Measure this delay time from grounding of the switch lead to lighting of the warning LED light.

Lighting Delay Time
Standard: about 3 seconds

★If the lighting delay time is out of the standard too far, replace the oil pressure light delay unit.

Downloaded from www.vulcanriders-sweden.org

Meter, Gauge

Meter Unit Removal

- Remove the bolt [A], and lift up the tail of the cover [B].
- Push the cover forward a little, and remove the meter cover.



- Remove the meter unit [A].

○Pull out the meter unit end from the pin [B] on the fuel tank, and then pull out the front of the meter unit from the pins [C].

- Slide the dust cover [D] out and disconnect the connector.

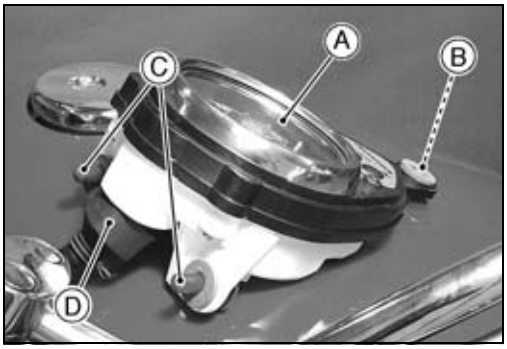

CAUTION

Never drop the meter unit, especially on a hard surface. Such a shock to the unit can damage it. Place the speedometer so that the face is up. If the meter is left upside down or sideways for any length of time, it will malfunction.

Meter Unit Installation

- Confirm that the rubber dampers [A] are in the meter unit.
- Connect the connector [B] and slide the dust cover [C] in.
- Be sure to put the holes onto the pins on the fuel tank.
- Install the meter cover.

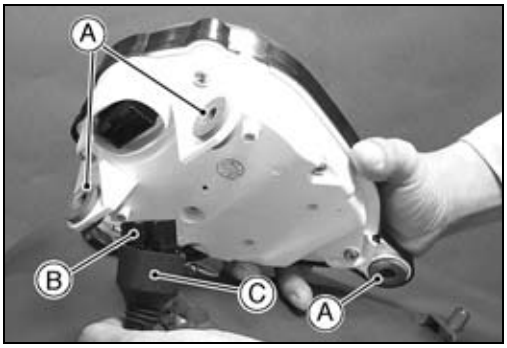

Meter Unit Disassembly

- Remove the meter unit (see Meter Unit Removal).
- Remove:
  Rear Rubber Damper [A]
  Screws [B]
- Remove the upper meter cover [C].

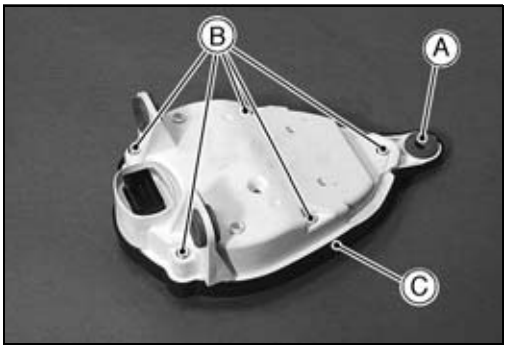

Downloaded from www.vulcanriders-sweden.org

Meter, Gauge

- Remove the screw [A] on the lower cover to free the speedometer.
- Remove the screw [B] on the indicator panel to remove the panel.

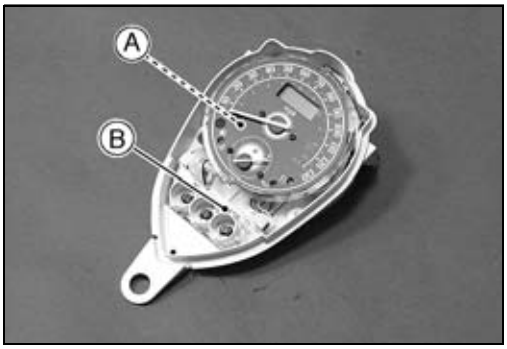

- Lifting the speedometer [B] with the indicator panel [C] attached, pull out the FI indicator LED light [D] and oil pressure warning LED light [E] from the lower cover [A].

NOTE

○*The water temperature warning LED light, oil pressure warning LED light and FI indicator LED light can not be exchanged.*

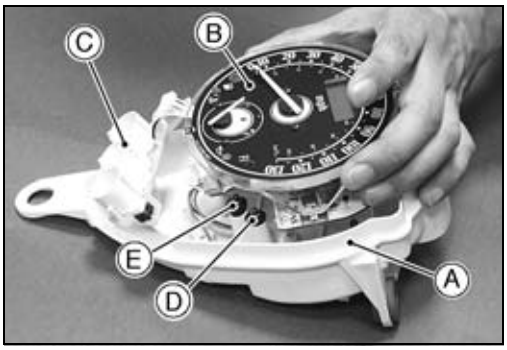

- Disconnect the connector [A].

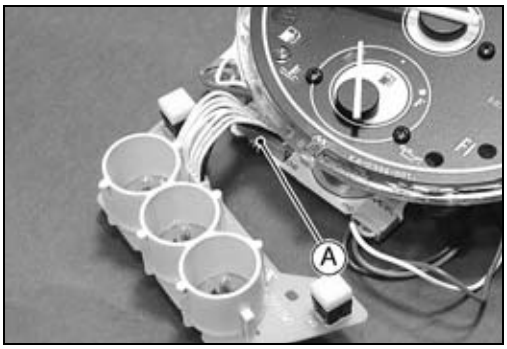

- Turn out the socket [A] counterclockwise.

○These sockets are for the high beam indicator light, turn signal indicator light and neutral indicator light.

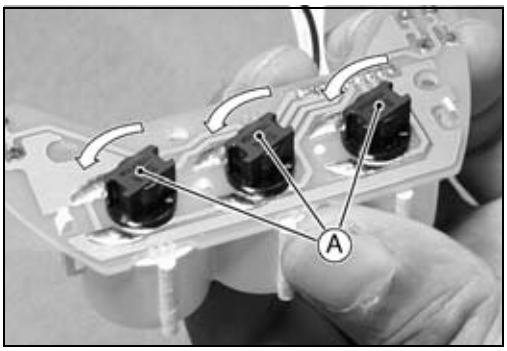

- Remove the wedge-base type bulb [A] by pulling the bulb straight out of the socket [B].

CAUTION

Do not turn the bulb. Pull the bulb out to prevent damage to the bulb. Do not use bulb rated for other than voltage or wattage specified in the wiring diagram.

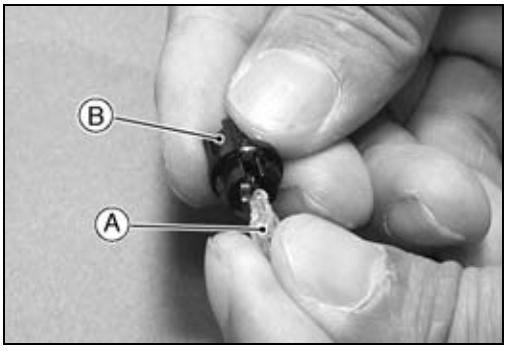

Downloaded from www.vulcanriders-sweden.org

Meter, Gauge

Meter Unit Assembly

- Connect the connector of the indicator panel to the speedometer.
- Put in the oil pressure warning LED light [A] and FI indicator LED light [B] to the lower cover.
  Oil Pressure Warning LED Light: Orange Lead and Green Lead
  FI Indicator LED Light: Red Lead and White Lead

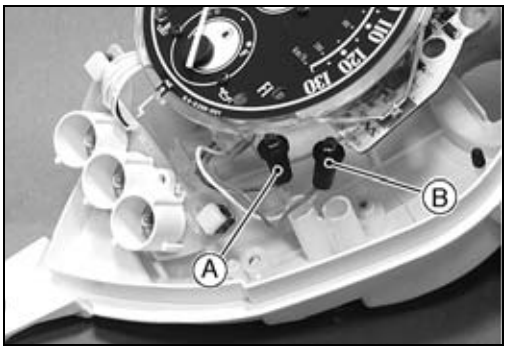

- Fit the speedometer and indicator panel onto the lower cover.
- ○Put the holes [B] onto the projections [A] of the lower cover.
- Tighten the screws.
- Install the upper cover.

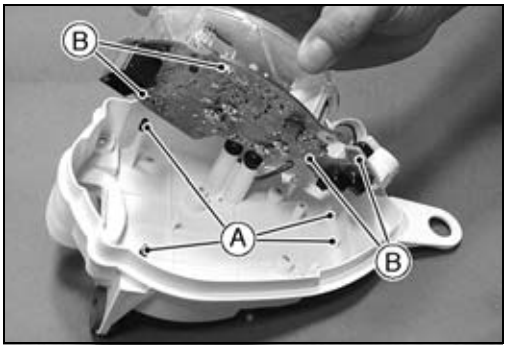

Meter Unit Inspection

Mode Selection and Reset Button Checks

- When the ignition switch is turned ON, all the LCD segments (the letters and numbers of the liquid crystal display) [A] appear for 3 seconds on the meter.
- If they do not appear, check the LCD segments.



- Check that the display [B] changes to the CLOCK, ODO, and TRIP display each time the mode select button [A] is pushed.

CLOCK → ODO → TRIP

- If the display doesn't change in the order specified, replace the speedometer assembly.

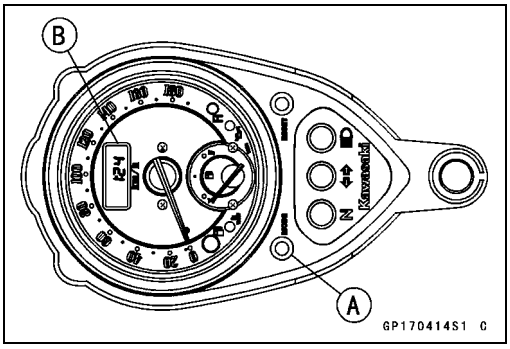

- Push the mode select button to TRIP and push the reset button [A] more than 2 seconds. The display shows "0.0".

★If the display doesn't show "0.0", replace the speedometer assembly.

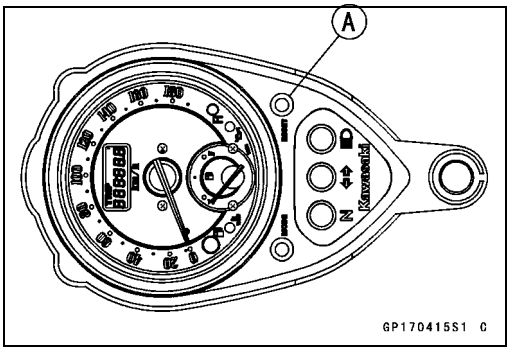

Downloaded from www.vulcanriders-sweden.org

Meter, Gauge

- Push the mode select button to CLOCK.
- Push the reset button [A] more than 2 seconds, then the display turns to the HOUR/MINUTE mode [B].

○In the HOUR/MINUTE mode, the numbers flash on the display.

- Check that the flashing number changes to the HOUR or MINUTE display each time the reset button is pushed.

► HOUR ► MINUTE ► HOUR ► MINUTE

- Check that the time can be set in this mode.

★If the time cannot be set, replace the speedometer assembly.

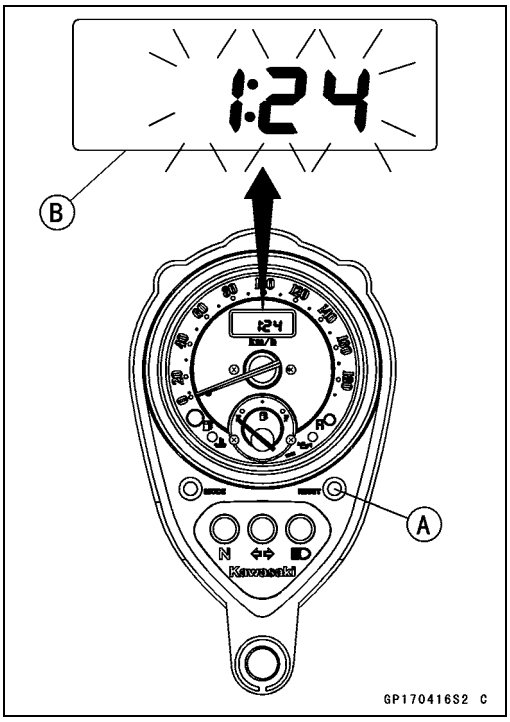

Clock Setting

- In the HOUR/MINUTE setting mode, push the reset button [A] again to effect the HOUR setting mode.

○The hour display flashes [B] on the display.

- Push the mode selector button to set the hour.

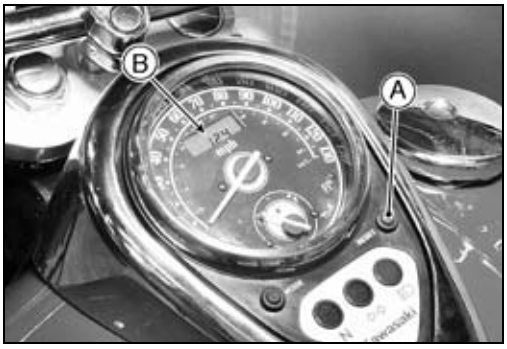

- In the HOUR setting mode, push the reset button [A] once to effect the MINUTE setting mode.

○The minute display flashes [B] on the display.

- Push the mode selector button to set the minute.



- Set the minute, push the reset button [A] to return to the HOUR/MINUTE setting mode.
- Push the mode selector button [B] to complete the time setting process.

○The clock starts counting the seconds as soon as the mode selector button is pushed.

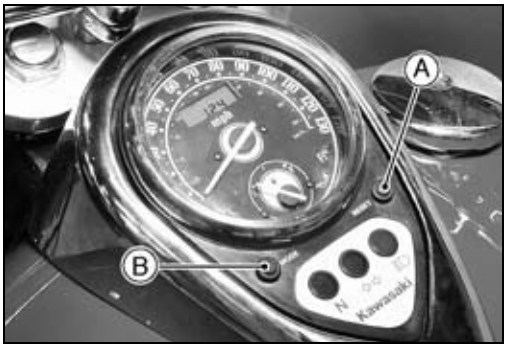

Downloaded from www.vulcanriders-sweden.org

Meter, Gauge

LCD Segment Inspection

- Remove the meter unit [A] (see Meter Unit Removal).

CAUTION

Do not drop the meter unit. Such a shock to the meter unit can damage it. Place the meter facing up. If a meter is left upside down or sideways for any length of time, it will malfunction.

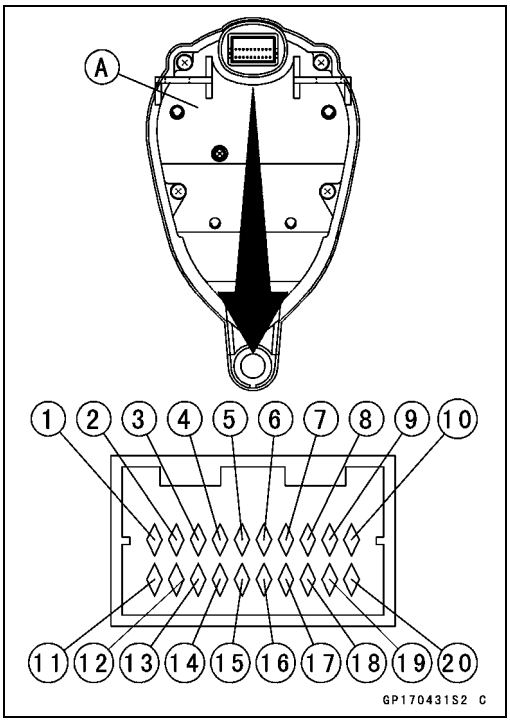

[1] Neutral Indicator Light (–)
[2] FI Indicator LED Light (–)
[3] Oil Temperature Warning LED Light (–)
[4] Water Temperature Warning LED Light (–)
[5] Distance Sensor Signal
[6] Unused
[7] Unused
[8] Unused
[9] Unused
[10] Speedometer Illumination LED Light (+)
[11] Battery (+)
[12] Ignition
[13] Battery (–)
[14] Speed Sensor Supply Voltage
[15] Speed Sensor Signal
[16] Fuel Gauge Signal
[17] Left Turn Signal Indicator Light (+)
[18] Right Turn Signal Indicator Light (+)
[19] Fuel Level Warning Light (–)
[20] High Bean Indicator Light (+)

CAUTION

Do not short each terminals. When inspecting the meter unit be sure to connect each connections.

- Using the auxiliary leads, connect a 12 V battery to the meter unit connector terminals.

Connections
Battery Positive Terminal (+) → Terminal [11]
Battery Negative Terminal (–) → Terminal [13]

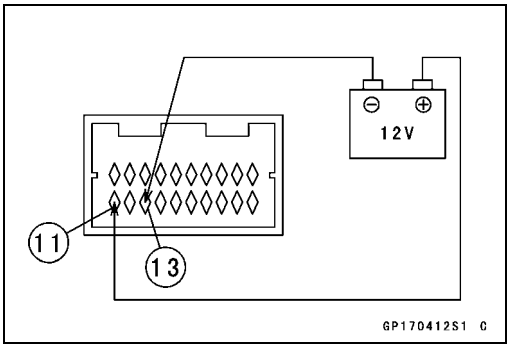

- Using the auxiliary leads, connect the battery positive lead to terminal [12].
- Verify that all the LCD segments (the letters and numbers of the liquid crystal display) appear for 3 seconds. Then the clock or meters operates normally depending on the mode selected.
- Check that disconnecting the terminal [12] causes all the LCD segments to become unlit.

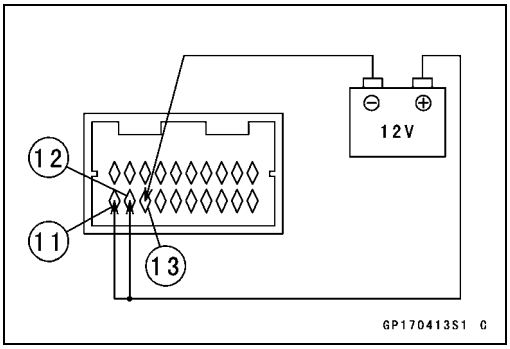

★If there is any problem, replace the speedometer assembly.

Downloaded from www.vulcanriders-sweden.org

Meter, Gauge

Speedometer Inspection



- If an oscillator is unavailable, check the speedometer as follows.

○Install the meter unit.

○Use the jack and the attachment jack to lift the rear wheel.

Special Tools - Jack: 57001-1238
Attachment Jack: 57001-1398

○Turn the ignition switch ON.

○Turn the rear wheel by hand to see if the speedometer shows the vehicle speed [A] that corresponds to the wheel rotation.

★If it does not show properly, inspect the speed sensor and power to the speed sensor.

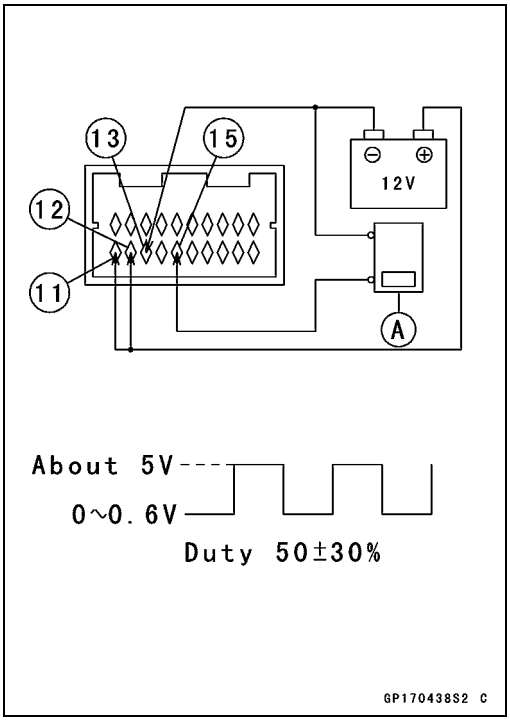

- If an oscillator is available, check the speedometer as follows.

○Connect the terminals in the same way as in the LCD segment inspection.

- Connect the oscillator [A] to the terminal [15]. The vehicle speed that corresponds to the input frequency will be displayed when a short wave form such as the one show in the diagram is input.

Example:

An input frequency of 750 Hz will display about 60 mph.

An input frequency of 450 Hz will display about 60 km/h.

★If the meter does not function correctly, replace the speedometer assembly.

Speed Sensor Power Supply Inspection

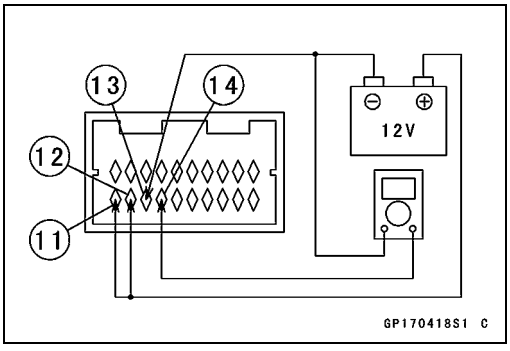

- Connect the terminals in the same way as in the LCD segment inspection.
- Set the hand tester [A] to DC25 V, check the voltage between terminal [14] and battery negative cable.

Connections
Hand Tester (+) → Terminal [14]
Hand Tester (–) → Battery Negative Cable (–)

Special Tool - Hand Tester: 57001-1394

★If the voltage is less than 7 V for 10 ~ 16 V battery Voltage, replace the speedometer assembly.

Downloaded from www.vulcanriders-sweden.org

Meter, Gauge

ODO Meter Inspection

- Turn the display [A] into ODO.
- During the speedometer inspection with an oscillator, verify that the odometer reading increases.

★If it does not increase, replace the speedometer assembly.

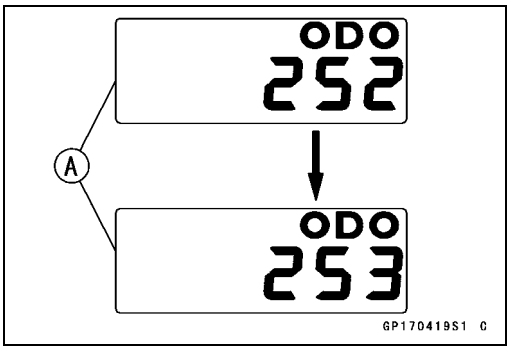

TRIP Meter Inspection

- Turn the display [A] into TRIP.
- During the speedometer inspection with an oscillator, verify that the trip meter reading increases.
- Stop the short wave form, press the reset button more than 2 seconds and check that the display shows “0.0”.

★If they are any problem, replace the speedometer assembly.

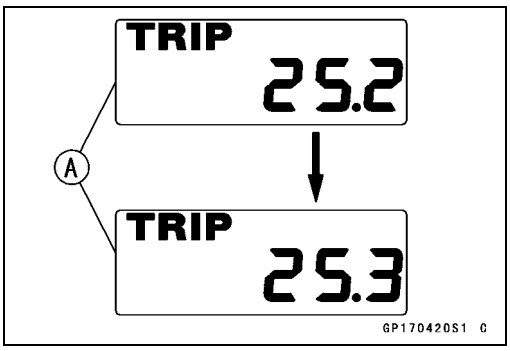

Fuel Level Gauge Inspection

- Connect the terminals in the same way as in the LCD segment inspection.
- Connect a variable rheostat [A] to the terminal [16] and battery negative cable as shown.
- Check that the position of the gauge pointer matches the resistance value of the variable rheostat.

Resistance (Ω)	Position of Meter Pointer
90	E [B]
38	1/2
10	F [C]

Resistance values are standard and they have tolerance.

★If this indicator function does not work, replace the speedometer assembly.

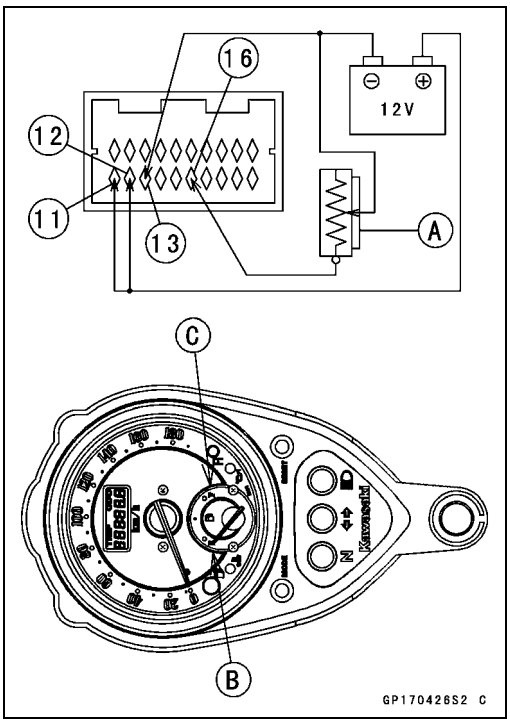

Downloaded from www.vulcanriders-sweden.org

Meter, Gauge

Distance Sensor Inspection

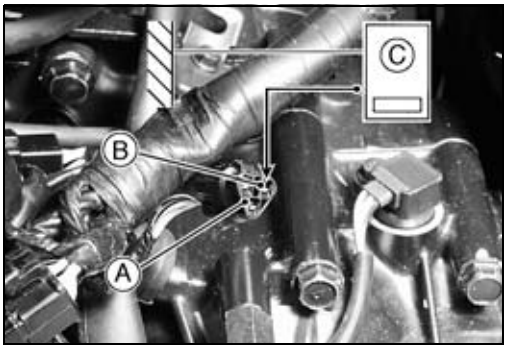

- Install the meter unit (see Meter Unit Installation).
- Disconnect the connector of the speed sensor (see Speed Sensor Removal).
- Connect the oscillator [C] to the LG/R terminal [B] of the connector [A] on the main harness.

Connections
Oscillator Output → Terminal LG/R
Oscillator Ground → Ground

- Turn the ignition switch ON, and go on the turn signal switch.
- Input the input frequency in the table, and measure the cancellation times. The cancellation time is a period between ON and automatic OFF of the turn signal switch.

Input Frequency	Standard Cancellation Times
40 Hz	53 ±5 seconds
80 Hz	31 ±3 seconds
260 Hz	15 ±2 seconds

★If cancellation times are within the standard, the distance sensor and turn signal control unit are normal.
★If cancellation times are out of the standard, inspect the turn signal control unit. If the turn signal control unit is normal, the distance sensor is subnormal, Replace the speedometer unit.

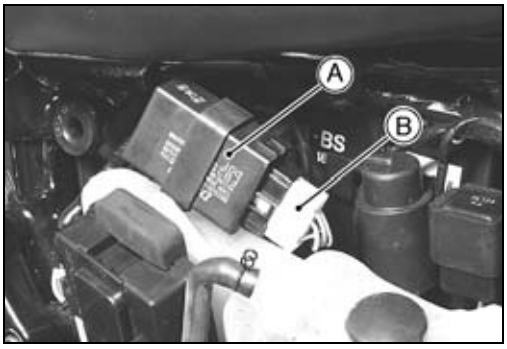

★If an oscillation is unavailable, check that the distance sensor as follows.
○Remove the right cover (see Frame chapter).
○Remove the turn signal control unit [A], but do not disconnect the connectors [B].
○Use the jack and the attachment jack to lift the rear wheel.

Special Tools - Jack: 57001-1238
Attachment Jack: 57001-1398



○Set the hand tester to the DC25 V range, check the voltage between the LB lead terminal [A] and the battery (–) terminal as shown.

Connections
Hand Tester (+) → LB Lead Terminal
Hand Tester (–) → Battery (–) Terminal

Special Tool - Hand Tester: 57001-1394

○Turn the ignition switch ON, and slowly rotating the rear wheel.
○At this time, the tester's pointer should swing 0.5 V and 12 V.
★If the tester's pointer does not swing 0.5 V and 12 V, inspect the speed sensor and the turn signal control unit. If they are normal, replace the speedometer assembly.

Downloaded from www.vulcanriders-sweden.org

Meter, Gauge

LED and Indicator Light Inspection

● Connect the 12 V battery to the meter terminals in the same way as in the LCD segment inspection.

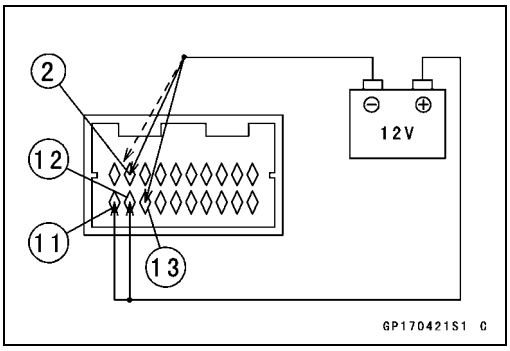

FI Indicator LED Light Connections
Battery Negative Cable (–) to Terminal [2]

● Connect the terminal [2].
○The FI indicator LED light lights.
● Disconnect the terminal [2].
○The FI indicator LED light disappears.
★If there is any problem, replace the speedometer assembly.

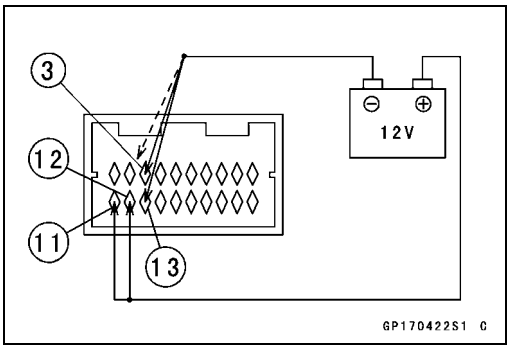

Oil Pressure Warning LED Light Connections
Battery Negative Cable (–) to Terminal [3]

● Connect the terminal [3].
○The oil pressure warning LED light lights.
● Disconnect the terminal [3].
○The oil pressure warning LED light disappears.
★If there is any problem, replace the speedometer assembly.

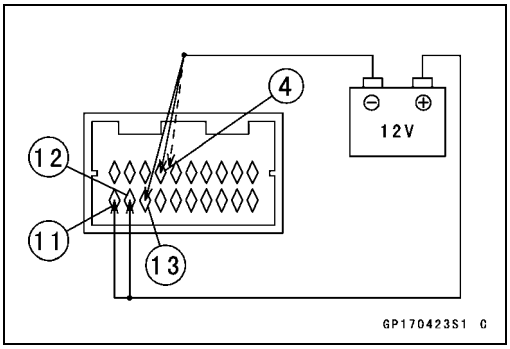

Water Temperature Warning LED Light Connections
Battery Negative Cable (–) to Terminal [4]

● Connect the terminal [4].
○The water temperature warning LED light lights.
● Disconnect the terminal [4].
○The water temperature warning LED light disappears.
★If there is any problem, replace the speedometer assembly.

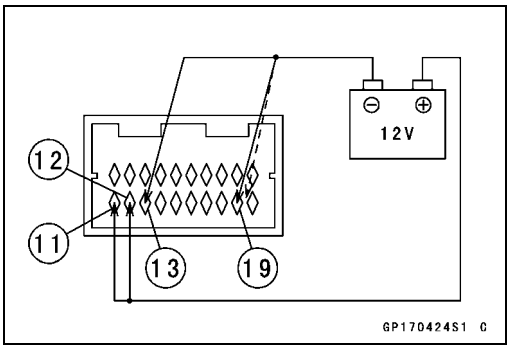

Fuel Level warning Light Connections
Battery Negative Cable (–) to Terminal [19]

● Connect the terminal [19].
○The fuel level warning light lights.
● Disconnect the terminal [19].
○The fuel level warning light disappears.
★If there is any problem, inspect the bulb and bulb socket.
★If they are normal, replace the speedometer assembly.

Downloaded from www.vulcanriders-sweden.org

Meter, Gauge

Speedometer Illumination LED Light Connections
Battery Positive Cable (+) to Terminal [10]

- Connect the terminal [10]
○The Illumination LED light lights.
- Disconnect the terminal [10].
○The Illumination LED light disappears.
★If there is any problem, replace the speedometer assembly.
- Be dotted the Illumination LED lights in the speedometer. If the meter pointer or LCD segments are hard to reading because of the unilluminative, replace the speedometer assembly.

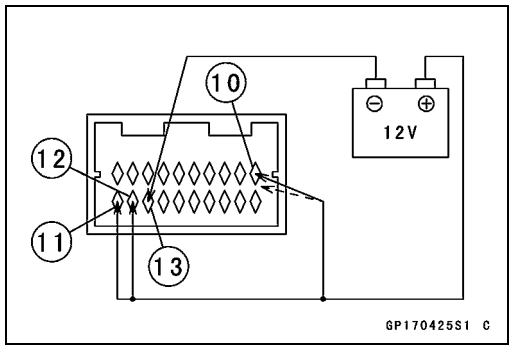

Turn Signal Indicator Lights Connections
Battery Positive Cable (+) to Terminal [17] or [18]

- Connect the terminal [17] or [18].
○The turn signal indicator light lights.
- Disconnect the terminal [17] or [18].
○The signal indicator light disappears.

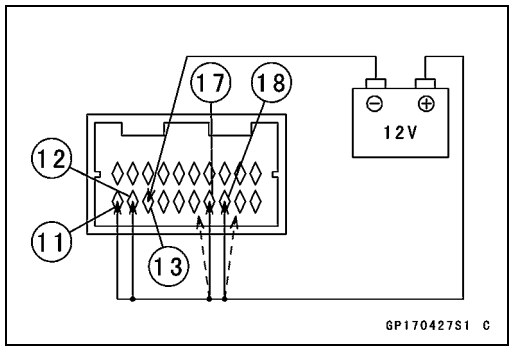

★If there is any problem, inspect the bulb, bulb socket [A] and wiring of the indicator panel [B].
★If they are normal, replace the speedometer assembly.

Special Tools - Hand Tester: 57001-1394
Needle Adapter Set: 57001-1457

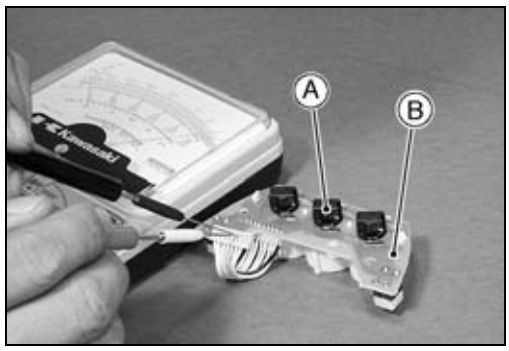

High Beam Indicator Light Connections
Battery Positive Cable (+) to Terminal [20]

- Connect the terminal [20].
○The high beam indicator light lights.
- Disconnect the terminal [20].
○The turn signal indicator light disappears.

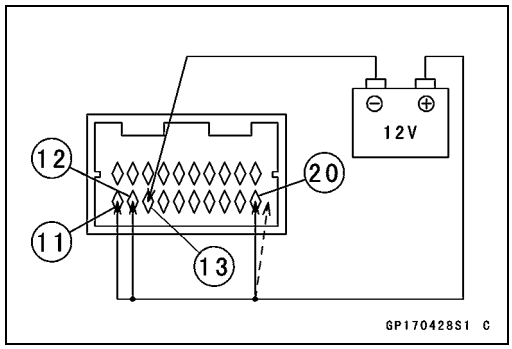

Downloaded from www.vulcanriders-sweden.org

Meter, Gauge

★If there is any problem, inspect the bulb, bulb socket [A] and wiring of the indicator panel [B] for continuity.
★If they are normal, replace the speedometer.

Special Tools - Hand Tester: 57001-1394
Needle Adapter Set: 57001-1457

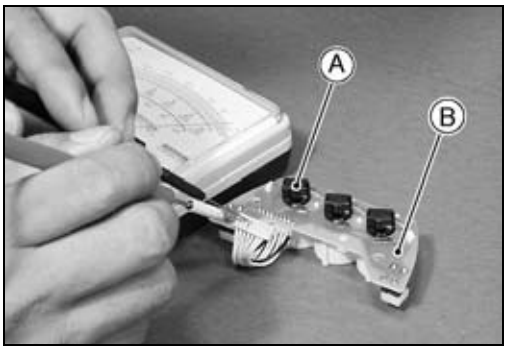

Neutral Indicator Light Connections
Battery Negative Cable (–) to Terminal [1]

● Connect the terminal [1].
○The neutral indicator light lights.
● Disconnect the terminal [1].
○The neutral indicator light disappears.

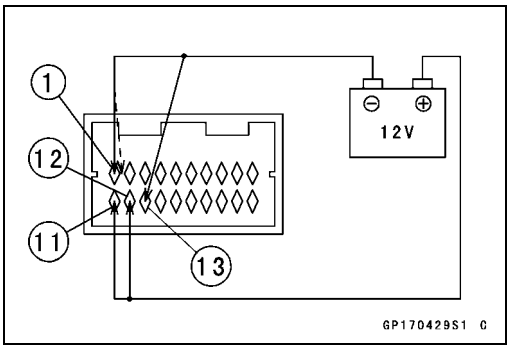

★If there is any problem, inspect the bulb, bulb socket [A] and wiring of the indicator panel [B] for continuity.
★If they are normal, replace the speedometer assembly.

Special Tools - Hand Tester: 57001-1394
Needle Adapter Set: 57001-1457



Downloaded from www.vulcanriders-sweden.org

Meter, Gauge

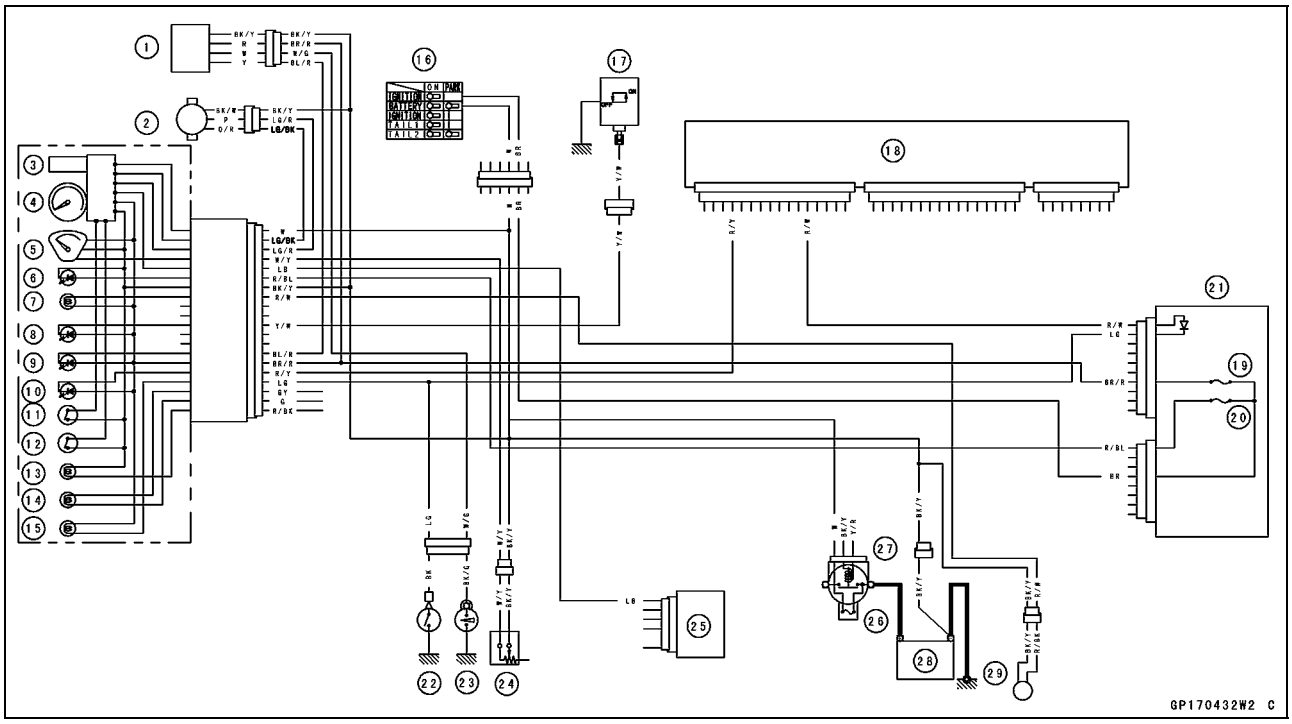

1. Oil Pressure Warning Light Delay Unit
2. Speed Sensor
3. Odo/Trip/Clock Meter
4. Speedometer
5. Fuel Level Gauge
6. Speedometer Illumination LED Lights
7. Fuel Level Warning Light
8. Water Temperature Warning LED Light
9. Oil Pressure Warning LED Light
10. FI Indicator LED Light
11. MODE Button
12. Reset Button
13. Headlight Beam Indicator Light
14. Turn Signal Indicator Light
15. Neutral Indicator Light
16. Ignition Switch
17. Water Temperature Switch
18. E.C.U. (Electronic Control Unit)
19. Ignition Fuse 10 A
20. Tall Light Fuse 10 A
21. Junction Box
22. Neutral Switch
23. Oil Pressure Switch
24. Fuel Level Sensor
25. Turn Signal Control Unit
26. Main Fuse 30 A
27. Starter Relay
28. Battery 12 V 18 Ah
29. Fuel Reserve Switch

Water Temperature Warning System Check

The water temperature warning LED light goes on when the ignition switch is turned on and goes off soon after the engine starts running to ensure that its circuit functions properly and the warning LED light has not burned out. The warning LED light also goes on whenever the coolant temperature rises to **113 ~ 117°C (235 ~ 243°F)** when the motorcycle is in operation. If it stays on, stop the engine and check the coolant level in the reserve tank after the engine cools down.

Downloaded from www.vulcanriders-sweden.org

Meter, Gauge

● Inspect the water temperature warning LED light and the system wiring (see Fuel System chapter).
○Turn on the ignition switch.
○Disconnect the water temperature switch lead [A], then ground it to the frame or engine using an auxiliary lead.
★If the water temperature warning LED light is lit, inspect the water temperature switch [B] (see Switches and Sensors section). Replace the switch if damaged.
★If the warning LED light is not lit, check the warning LED light and wiring.
Front [C]

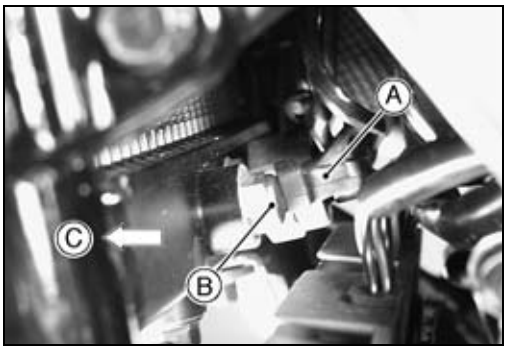

Water Temperature Warning System

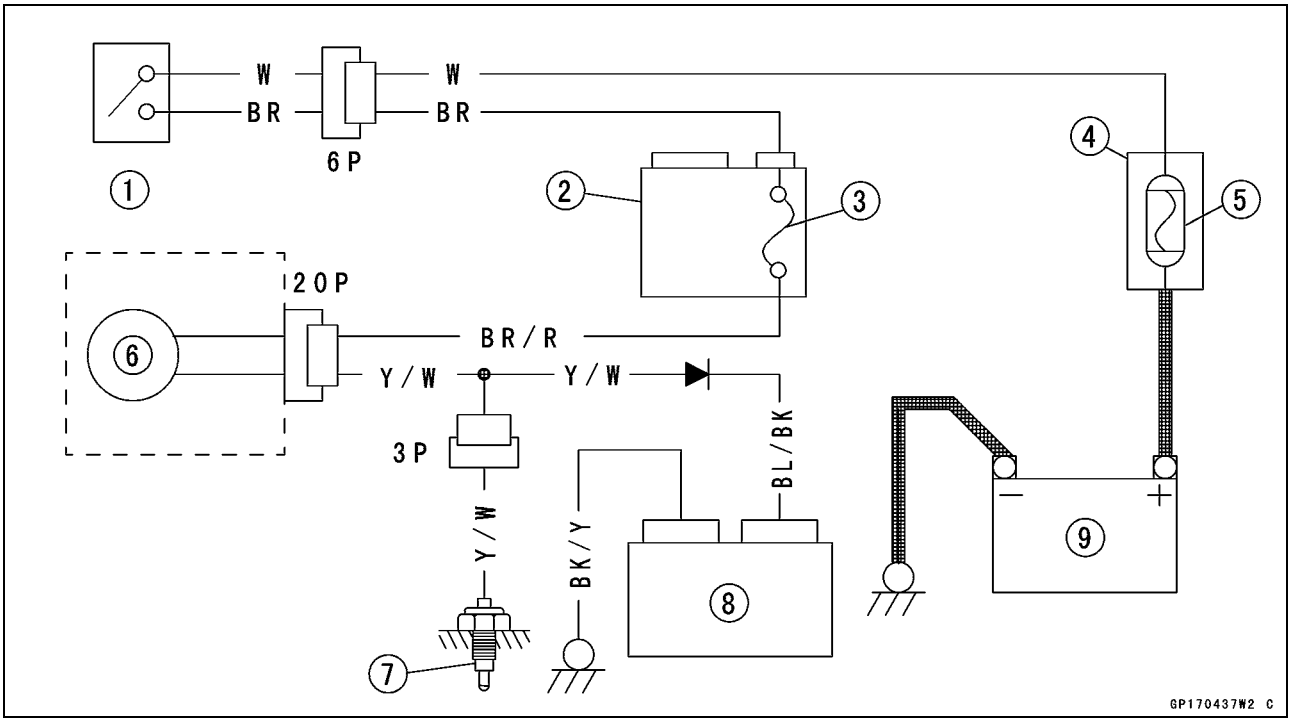

1. Ignition Switch
2. Junction Box
3. Ignition Fuse 10 A
4. Starter Relay
5. Main Fuse 30 A
6. Water Temperature Warning LED Light
7. Water Temperature Switch
8. ECU
9. Battery 12 V 18 Ah

Downloaded from www.vulcanriders-sweden.org

Meter, Gauge

Fuel Gauge Operation Inspection

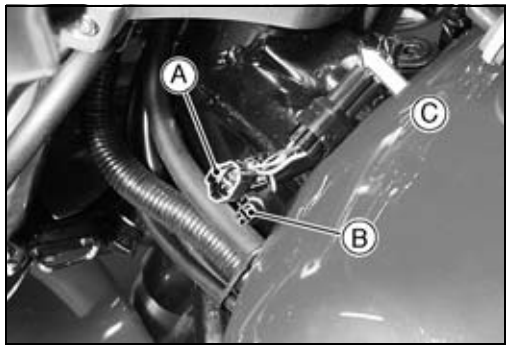

- Remove:
  Speedometer Cover (see Meter Unit Removal)
  Fuel Tank Bolts (see Fuel System chapter)
- Lift the fuel tank front part a little and pull the fuel gauge connector forward.
- Disconnect the fuel gauge connector.
- Prepare an auxiliary lead, and check the operation of the gauge.
- Open or short the fuel level sensor leads to check the fuel gauge operation.
  Fuel Level Sensor Connector [A] (Fuel Tank Side)
  Fuel Level Sensor Connector [B] (Main Harness Side)
  Front [C]

Fuel Gauge Operation Check
Ignition Switch Position: ON

Lead Location:	**Female 2-pin fuel gauge connector (disconnected)**
Results:	**Gauge should read E when connector leads are opened.**
	Gauge should read F when connector leads are shorted.

★If the gauge readings are correct, the fuel level sensor is bad (see Fuel Level Sensor Inspection). If these readings are not obtained, the trouble is with the gauge and/or wiring.

- Check the fuel gauge circuit wiring (see Wiring Inspection).

★If all wiring and components other than the fuel gauge check out good, the gauge is defective. Replace the speedometer assembly.

Downloaded from www.vulcanriders-sweden.org

Meter, Gauge

Fuel Gauge, Warning Light Circuit

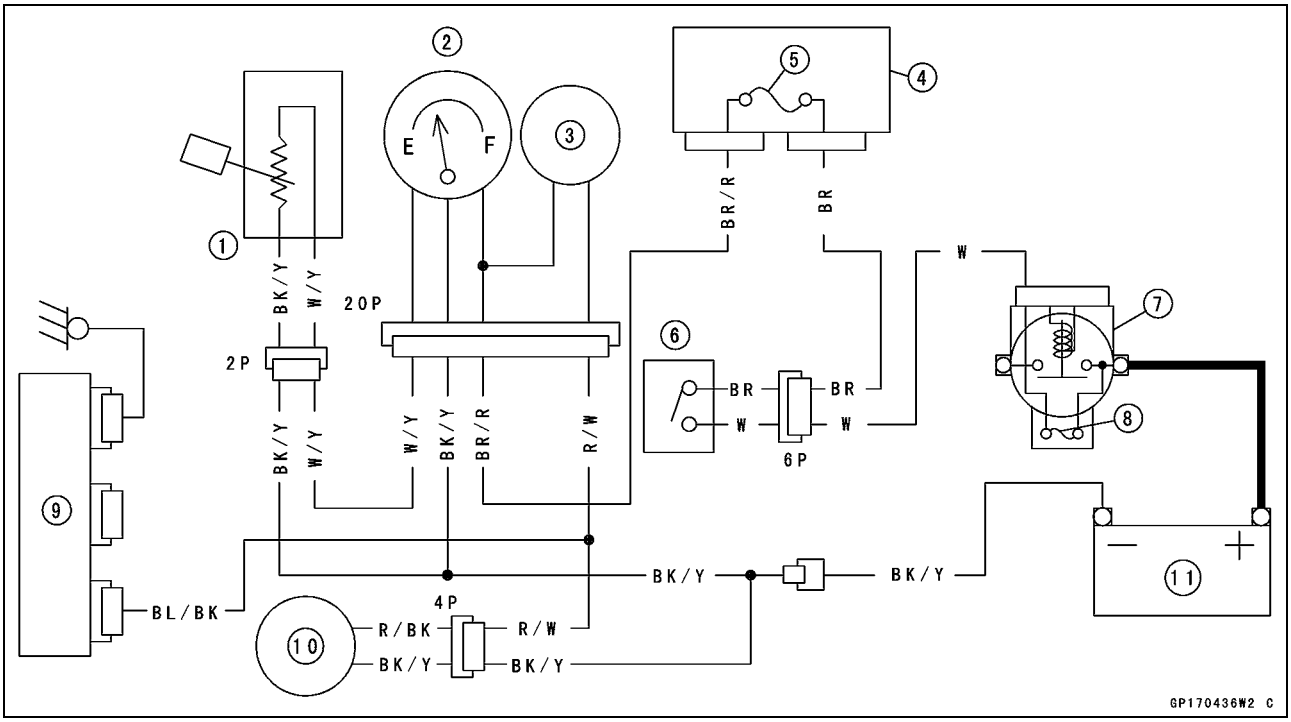

1. Fuel Level Sensor
2. Fuel Gauge
3. Fuel Level Warning Light
4. Junction Box
5. Ignition Fuse 10 A
6. Ignition Switch
7. Starter Relay
8. Main Fuse 30 A
9. ECU
10. Fuel Reserve Switch
11. Battery 12 V 18 Ah

Downloaded from www.vulcanriders-sweden.org

Switch and Sensors

Fuel Reserve Switch Inspection

- Remove:
  Fuel Pump (see Fuel System chapter)
- Connect the test light (12 V 3W bulb in a socket with wires) and the 12 V battery to the fuel pump connector as shown.
  12 V Battery [A]
  Test Light [B]
  Fuel Pump Connector [C]
  Fuel Reserve Switch [D]

★If the test light doesn't light, replace the fuel pump.

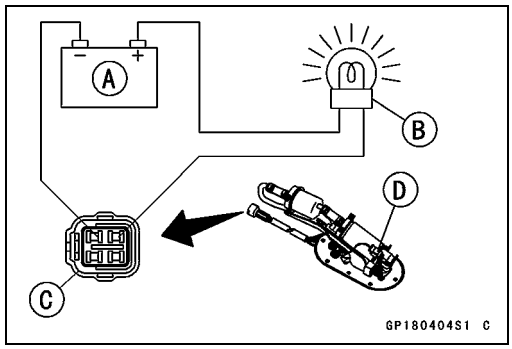

NOTE

○*It may take a long time to turn on the test light in case that the fuel reserve switch is inspected just after the fuel pump is removed.*
Leave the fuel reserve switch with leads for inspection connected for one (1) minute.

- Prepare a container [E] filled with a water.
- Sink the fuel reserve switch with the fuel pump in a water.
- Connect the test light and 12 V battery in the same manner as specified in the "above test".

★If the test light turn on, the reserve switch is defective. Replace the switch along with the fuel pump.

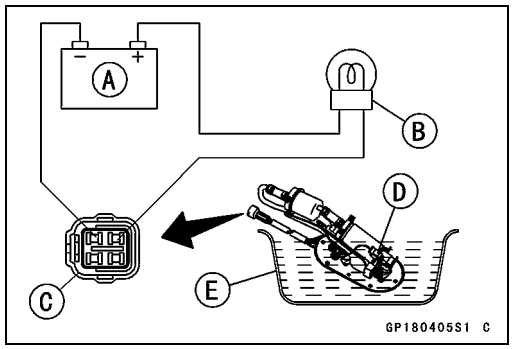

Speed Sensor Removal

- Remove:
  Alternator Outer Cover
  Speed Sensor Lead Connector [A]
  Band [B]
  Bolt [C]
  Speed Sensor [D]

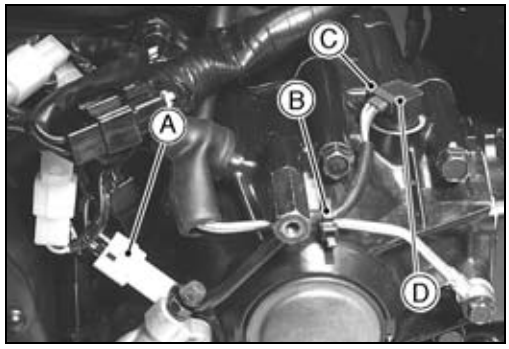

Speed Sensor Installation

- Apply grease to the O-ring [A] on the speed sensor.
- Apply:

Non-permanent Locking Agent -
Speed Sensor Mounting Bolt

- Tighten:

Torque - Speed Sensor Mounting Bolt: 9.8 N·m (1.0 kgf·m, 87 in·lb)



Downloaded from www.vulcanriders-sweden.org

Switch and Sensors

Speed Sensor Inspection

- Remove:
  Speed Sensor (see Speed Sensor Removal)
- Connect the speed sensor connector [A] with a battery [B], 10 kΩ resistor [C] and hand tester [D] as shown.
- Set the tester to the DC 25 V range.

Special Tool - Hand Tester: 57001-1394

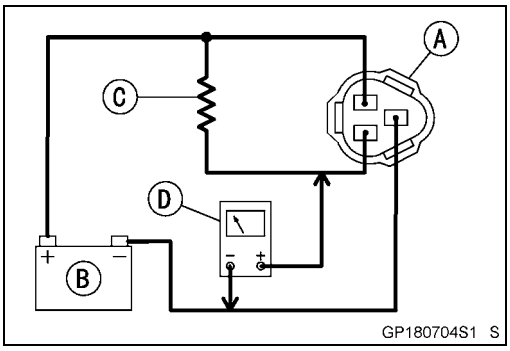

- Trace [A] the speed sensor surface with the screw driver.

○Then the tester indicator should flick [B].

★If the tester indicator does not flick, replace the speed sensor.

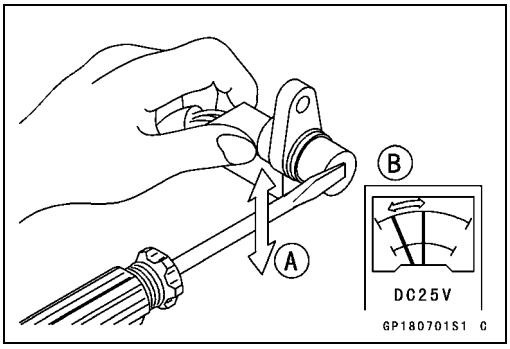

Front Brake Light Switch Inspection (Periodic)

- Turn on the ignition switch.
- The brake light should go on when the front brake is applied.

★If it does not, replace the switch.

Rear Brake Light Switch Check/Adjustment (Periodic)

- Check the operation of the rear brake light switch by depressing the brake pedal [A]. The brake light should go on after about **15 mm (0.59 in.)** of the pedal travel [B].

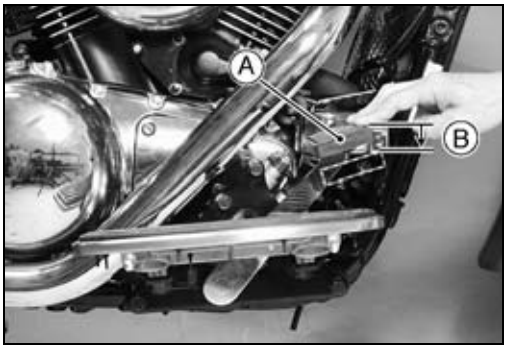

★If it does not, adjust the brake light switch.

- While holding the switch body, turn the adjusting nut to adjust the switch.
  Switch Body [A]
  Adjusting Nut [B]
  Light sooner as the body rises [C]
  Light later as the body lowers [D]

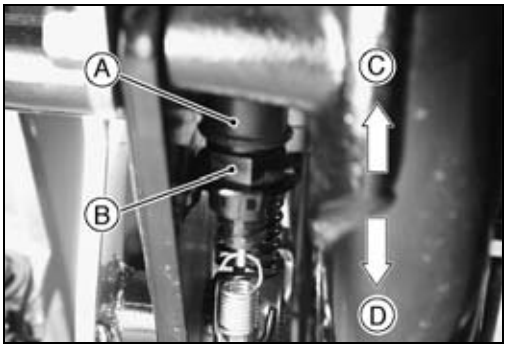

CAUTION

To avoid damaging the electrical connections inside the switch, be sure that the switch body does not turn during adjustment.

Downloaded from www.vulcanriders-sweden.org

Switch and Sensors

Radiator Fan Switch Removal

CAUTION

Never drop the fan switch, especially on a hard surface. Such a shock to the part can damage it.

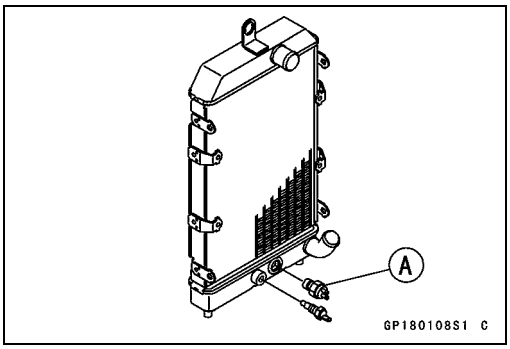

- Drain the coolant (see Coolant Draining).
- Remove:
  Front Guard (see Frame chapter)
  Regulator/Rectifire (see this chapter)
- Disconnect the fan switch connector.
- Unscrew the radiator fan switch [A] from the radiator.

Radiator Fan Switch Installation

- Tighten:

Torque - Radiator Fan Switch: 18 N·m (1.8 kgf·m, 13 ft·lb)

- Fill the coolant and bleed the air from the cooling system (see Coolant Filling in the Cooling System chapter).

Radiator Fan Switch Inspection

- Remove the fan switch from the radiator.
- Suspend the switch [A] in a container of machine oil so that the heat-sensitive portion and threaded portion are submerged.
- Suspend an accurate thermometer [B] with heat-sensitive portions [C] located in almost the same depth.

NOTE

○*The switch and thermometer must not touch the container sides or bottom.*

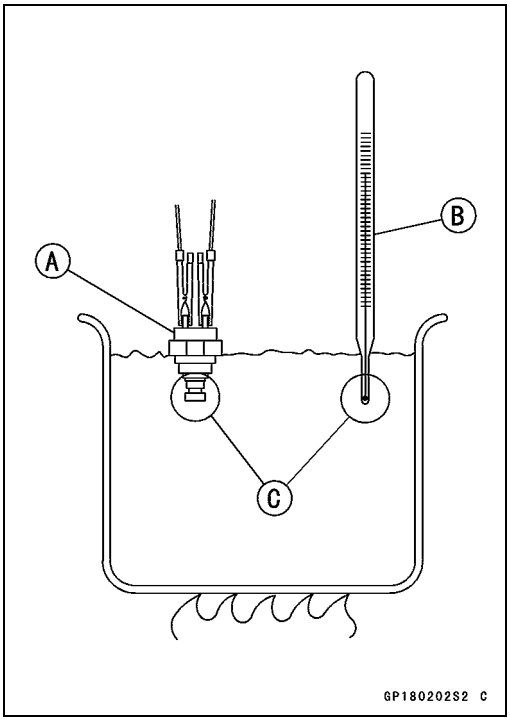

- Place the container over a source of heat and gradually raise the temperature of the oil while stirring the oil gently for even temperature.
- Using the hand tester (special tool), measure the internal resistance of the switch across the terminals at the temperatures shown in the table.

★If the measurement is out of the range, replace the switch.

Fan Switch Resistance

○**Rising temperature:**

From OFF to ON: 102 ~ 108°C (216 ~ 226°F)

○**Falling temperature:**

From ON to OFF: 97°C (203°F) or less - VN1500-N1 ~ N3

From ON to OFF: 98°C (208°F) or less - VN1500-N4 ~

ON: Less the 0.5 Ω

OFF: More than 1 MΩ

Downloaded from www.vulcanriders-sweden.org

Switch and Sensors

Water Temperature Switch Removal

CAUTION

The water temperature switch should never be allowed to fall on a hard surface. Such a shock to the part can damage it.

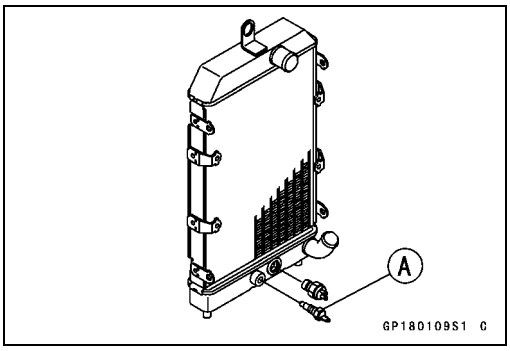

- Drain the coolant (see Coolant Draining in the Cooling System chapter).
- Remove:
  Front Guard (see Frame chapter).
  Regulator/Rectifier (see Regulator/Rectifier Removal)
- Disconnect the switch connector.
- Remove the water temperature switch [A] from the radiator.

Water Temperature Switch Installation

- Apply silicone sealant to the threads of the water temperature switch and tighten it.

Torque - Water Temperature Switch: 7.4 N·m (0.75 kgf·m, 65 in·lb)

- Fill the engine with coolant and bleed the air from the cooling system (see Coolant Filling).

Water Temperature Switch Inspection

- Remove the water temperature switch.
- Suspend the switch [A] in a container of machine oil so that the heat-sensitive portion and threaded portion are submerged.
- Suspend an accurate thermometer [B] with heat-sensitive portions [C] located in almost the same depth.

NOTE

○*The switch and thermometer must not touch the container side or bottom.*

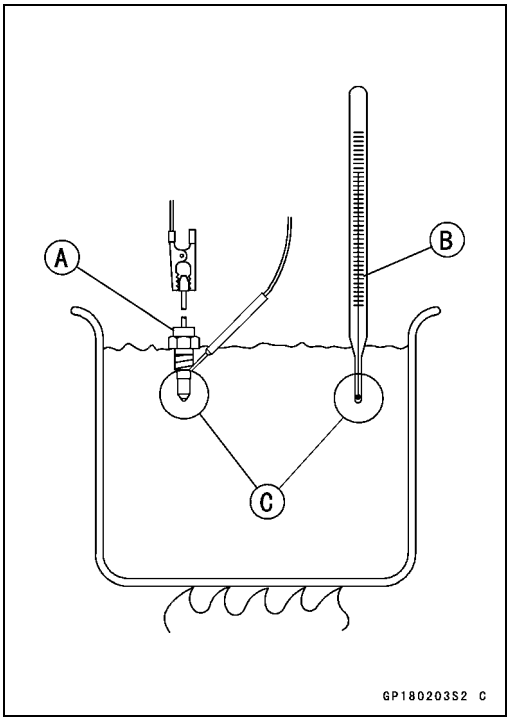

- Place the container over a source of heat and gradually raise the temperature of the oil while stirring the oil gently for even temperature.
- Using the hand tester, measure the internal resistance of the switch across the terminal and the body at the temperatures shown in the table.

★If the measurement is out of the range, replace the switch.

Water Temperature Switch Resistance

○**Rising temperature:**

From OFF to ON: 113 ~ 117°C (235 ~ 243°F)

○**Falling temperature:**

From ON to OFF: 108 °C (226 °F) or less

ON: Less the 0.5 Ω

OFF: More than 1 MΩ

Downloaded from www.vulcanriders-sweden.org

Switch and Sensors

Fuel Level Sensor Removal

- Remove the fuel tank (see Fuel System chapter).
- Turn the fuel tank upside down.
- Open the clamps [A] and take off the fuel level sensor lead [B].
- Pull out the sensor cover.
- Remove the bolts and take the fuel level sensor [C] off the fuel tank [D].

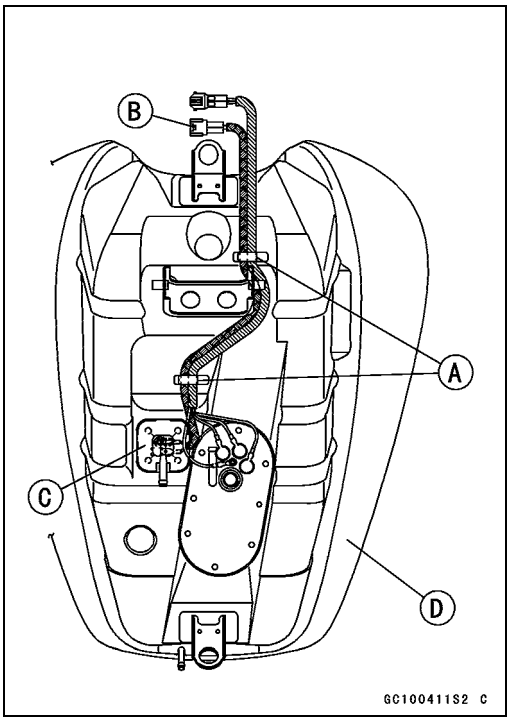

Fuel Level Sensor Installation

- Replace the rubber gasket with new one.

Fuel Level Sensor Inspection

- Remove the fuel tank (see Fuel System chapter).
- Remove the fuel level sensor from the bottom of the fuel tank.

- Check that the float moves up and down smoothly without binding. It should go down under its own weight.

★If the float does not move smoothly, replace the sensor.

Float in Full Position [A]
Float in Empty Position [B]
Float Arm Stoppers [C]
Front [D]

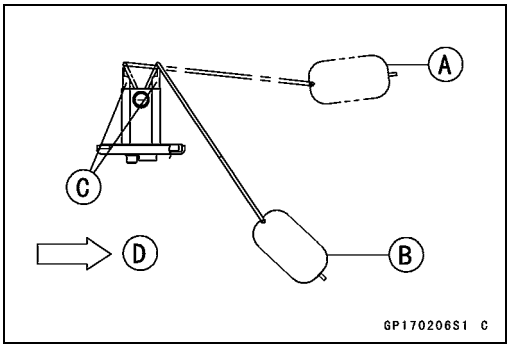

- Using the hand tester, measure the resistance across the terminals in the fuel level sensor wire connector [A].

Special Tool - Hand Tester: 57001-1394

★If the tester readings are not as specified, or do not change smoothly according as the float moves up and down, replace the sensor.

Fuel Level Sensor Resistance
Standard: Full position: 4 ~ 10 Ω
Empty position: 90 ~ 100 Ω

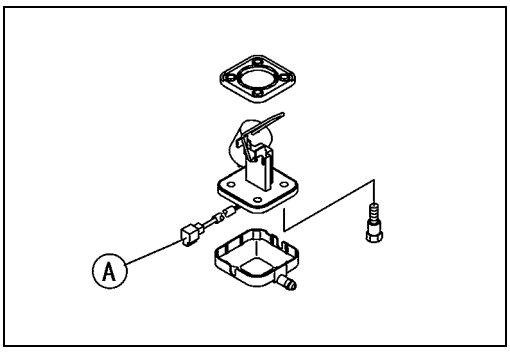

Downloaded from www.vulcanriders-sweden.org

Switch and Sensors

Diode (Rectifier) Inspection

- Remove the fuel tank (see Fuel System chapter).
- Disconnect the diode assemblies [A].

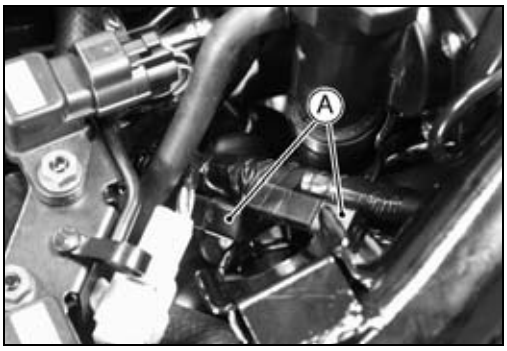

- Set the hand tester to the × 100 Ω range.

Special Tool - Hand Tester: 57001-1394

- Check the continuity between the diode terminals in both directions.

★If there is continuity in one direction (forward direction) but no continuity (infinity) in the reverse direction, the diode is normal.

★The diode is defective if there is continuity after changing the direction, or if it remains with no continuity.

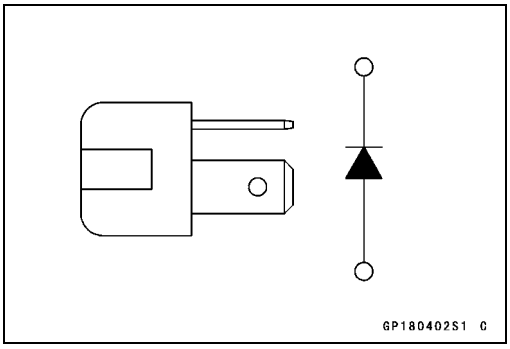

NOTE

○*The actual resistance measurement in the forward direction varies with the tester used and the individual diodes. Generally speaking, it is acceptable if the tester's indicator swings approximately halfway.*

Downloaded from www.vulcanriders-sweden.org

Junction Box

The junction box [A] has fuses [B], relays, and diodes. The relays and diodes can not be removed.

Front [C]

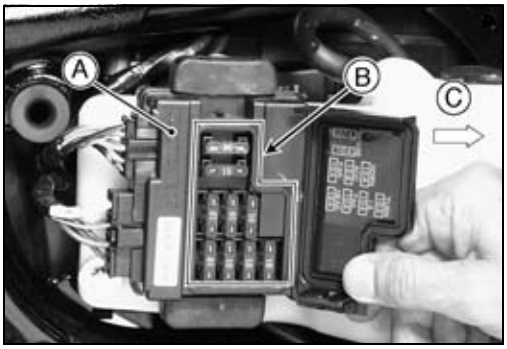

Junction Box Fuse Circuit Inspection

- Remove the right side cover (see Frame chapter).
- Remove the junction box.
- Pull off the connectors from the junction box.
- Make sure all connector terminals are clean and tight, and none of them have been bent.

★Clean the dirty terminals, and straighten slightly-bent terminals.

- Check conductivity of the numbered terminals with the hand tester.

★If the tester does not read as specified, replace the junction box.

Fuse Circuit Inspection

Tester Connection	Tester Reading (Ω)
1 - 1A	0
1 - 2	0
3A - 4	0
6 - 5	0
6 - 10	0
6 - 7	0
6 - 17	0

Tester Connection	Tester Reading (Ω)
1A - 8	∞
2 - 8	∞
3A - 8	∞
6 - 2	∞
6 - 3A	∞
17 - 3A	∞

Downloaded from www.vulcanriders-sweden.org

Junction Box

Starter Circuit/Headlight Relay Inspection

- Remove the junction box.
- Check conductivity of the following numbered terminals by connecting the hand tester and one 12 V battery to the junction box as shown.

★If the tester does not read as specified, replace the junction box.

Relay Circuit Inspection (with the battery disconnected)

	Tester Connection	Tester Reading (Ω)
Headlight Relay	*7 - 8	∞
	*7 - 13	∞
	(+) (–) *13 - 9	Not ∞**

	Tester Connection	Tester Reading (Ω)
Starter Circuit Relay	9 - 11	∞
	12 - 13	∞
	(+) (–) 13 - 11	∞
	(+) (–) 12 - 11	Not ∞**

(*): US, Canada, and Australia Models only
(**): The actual reading varies with the hand tester used.
(+): Apply tester positive lead.
(–): Apply tester negative lead.

Relay Circuit Inspection (with the battery connected)

Reading	Battery Connection (+) (–)	Tester Connection	Tester Reading (Ω)
Headlight Realy	*9 - 13	*7 - 8	0
Starter Circuit Relay	11 - 12	(+) (–) 13 - 11	Not ∞**

(*): US, Canada, and Australia Models only
(**): The actual reading varies with the hand tester used.
(+): Apply tester positive lead.
(–): Apply tester negative lead.

Downloaded from www.vulcanriders-sweden.org

Junction Box

Diode Circuit Inspection

- Remove the junction box.
- Check conductivity of the following pairs of terminals.

Diode Circuit Inspection

Tester Connection	*13-8, *13-9, 12-11, 12-14, 15-14, 16-14

(*): US, Canada, and Australia Models only

★The resistance should be low in one direction and more than ten times as much in the other direction. If any diode shows low or high in both directions, the diode is defective and the junction box must be replaced.

NOTE

○*The actual meter reading varies with the meter or tester used and the individual diodes, but generally speaking, the lower reading should be from zero to one half the scale.*

Downloaded from www.vulcanriders-sweden.org

Junction Box

Junction Box Internal Circuit (Australia, Canada, and U.S.)

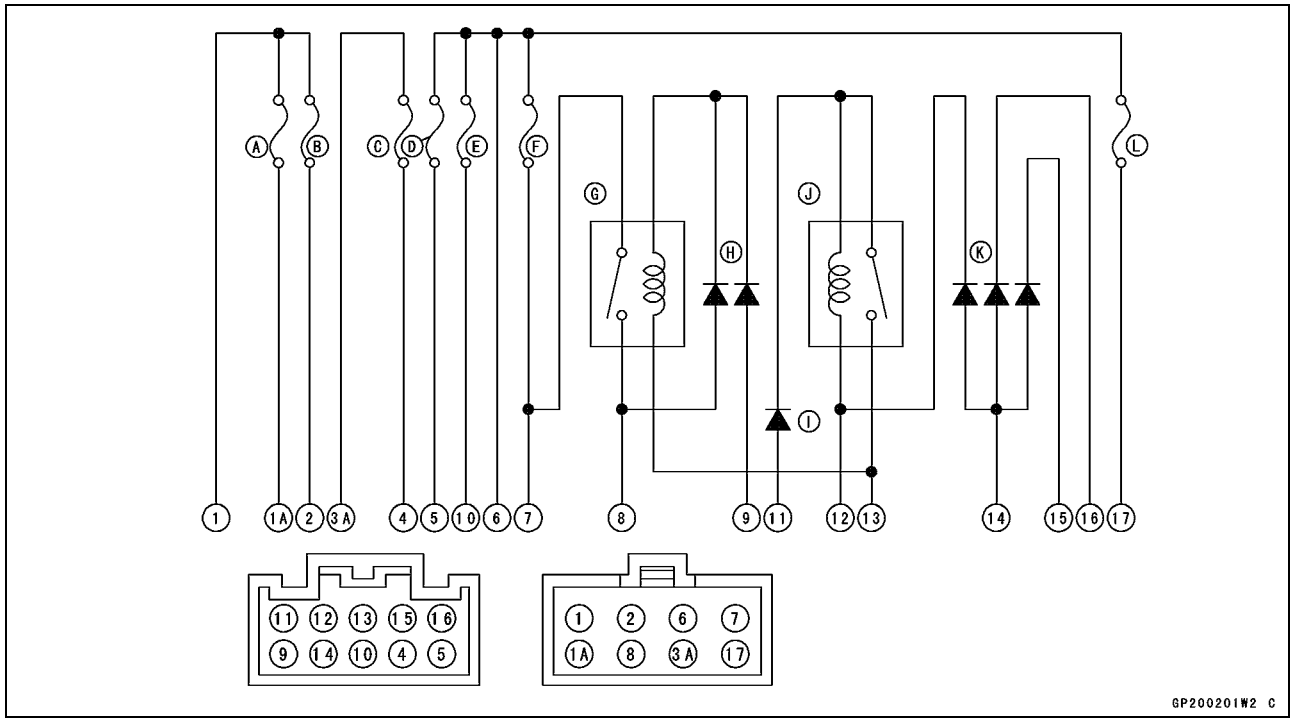

Junction Box Internal Circuit (Except for Australia, Canada, and U.S.)

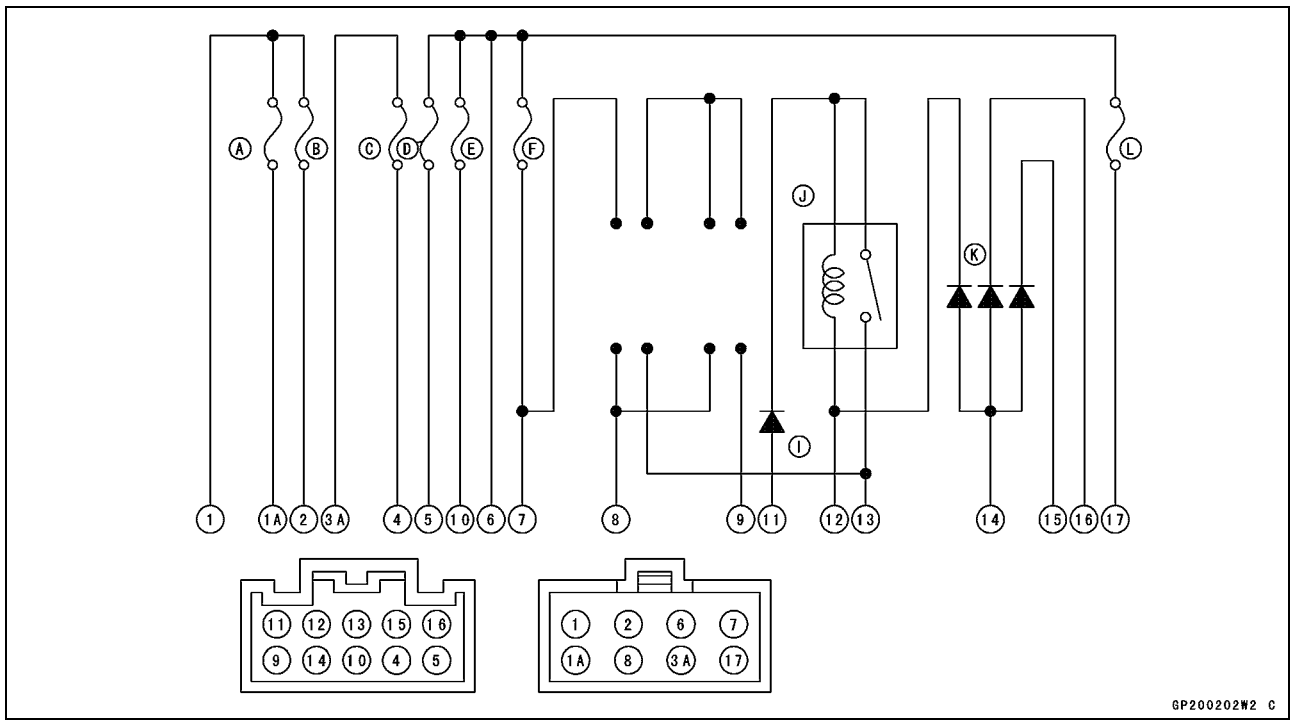

Accessory Fuse 10 A [A]
Fan Fuse 10 A [B]
Fan Fuse 15 A [B] (VN1500-N4 ~, U.S. and Canada)
Turn Signal Fuse 10 A [C]
Horn Fuse 10 A [D]
Ignition Fuse 10 A [E]
Headlight Fuse 10 A [F]
Headlight Relay [G]
Headlight Diodes [H]
Starter Diode [I]
Starter Circuit Relay [J]
Interlock Diodes [K]
Taillight Fuse 10 A [L]

Downloaded from www.vulcanriders-sweden.org

Fuse

Main Fuse Removal

- Remove the right side cover (see Frame chapter).
- Remove the junction box and the reserve tank.
- Remove the starter relay [A].
- Pull out the main fuse [B] from the starter relay with needle nose pliers.
  Front [C]

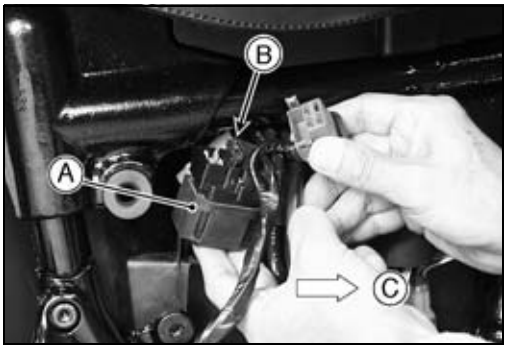

Junction Box Fuse Removal

- Remove the right side cover (see Frame chapter).
- Unlock the hook to lift up the lid [A].
- Pull the fuses [B] straight out of the junction box with needle nose pliers.

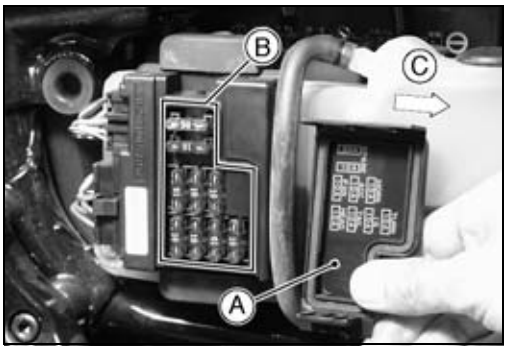

Fuse Installation

- If a fuse fails during operation, inspect the electrical system to determine the cause, and then replace it with a new fuse of proper amperage.
- Install the junction box fuses on the original position as specified on the lid.

Fuse Inspection

- Remove the fuse (see Fuse Removal).
- Inspect the fuse element.

★If the element is open replace the fuse. Before replacing a blown fuse, always check the amperage in the affected circuit. If the amperage is equal to or greater than the fuse rating, check the wiring and related components for a short circuit.
  Housing [A]
  Fuse Element [B]
  Terminals [C]
  Blown Element [D]

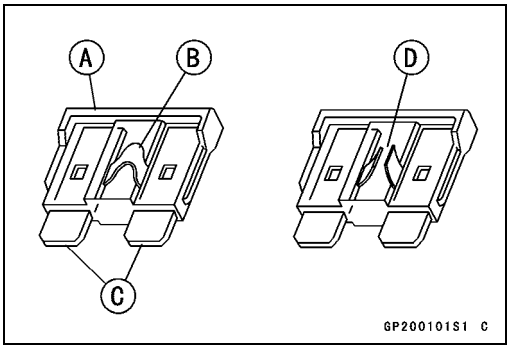

NOTE

○*If the engine is operated under the condition which the battery needs refreshing charge, a main fuse may blow out due to a mass current flows to the battery.*

CAUTION

Do not use a fuse rated for other than amperage and voltage specified in the wiring diagram. Installation of a fuse with a higher rating may cause damage to wiring and components, and a fuse of a lower rating will soon blow again.

Downloaded from www.vulcanriders-sweden.org

Downloaded from www.vulcanriders-sweden.org

Appendix

Table of Contents

Troubleshooting Guide (except DFI) 16-2
General Lubrication 16-7
    Lubrication (Periodic Maintenance) 16-7
Nut, Bolt, and Fastener Tightness 16-8
    Tightness Inspection (Periodic Inspection) 16-8
Unit Conversion Table 16-9

Downloaded from www.vulcanriders-sweden.org

Troubleshooting Guide (except DFI)

NOTE

○*Refer to Fuel System chapter for most of DFI troubleshooting guide.*

○*This is not an exhaustive list, giving every possible cause for each problem listed. It is meant simply as a rough guide to assist the troubleshooting for some of the more common difficulties.*

Engine Doesn't Start, Starting Difficulty:

Starter motor not rotating:
- Starter lockout switch or neutral switch trouble
- Starter motor trouble
- Battery voltage low
- Starter relays not contacting or operating
- Starter button not contacting
- Wiring open or shorted
- Ignition switch trouble
- Engine stop switch trouble
- Fuse blown

Starter motor rotating but engine doesn't turn over:
- Starter clutch trouble
- Vehicle-down sensor (DFI) coming off

Engine won't turn over:
- Valve seizure
- Rocker arm seizure
- Cylinder, piston seizure
- Crankshaft seizure
- Connecting rod small end seizure
- Connecting rod big end seizure
- Transmission gear or bearing seizure
- Camshaft seizure
- Balancer bearing seizure

No fuel flow:
- No fuel in tank
- Fuel pump trouble
- Fuel tank air vent obstructed
- Fuel filter clogged
- Fuel line clogged

Engine flooded:
- Clean spark plugs and adjust plug gaps
- Starting technique faulty (When flooded, do not crank the engine with the throttle fully opened. This promotes engine flood because more fuel is supplied automatically by DFI.)

No spark; spark weak:
- Vehicle-down sensor (DFI) coming off
- Ignition switch not ON
- Engine stop switch turned off
- Clutch lever not pulled in or gear not in neutral
- Battery voltage low
- Spark plug dirty, broken, or gap maladjusted
- Spark plug cap or high tension cable trouble
- Spark plug cap shorted or not in good contact
- Spark plug incorrect
- IC igniter in ECU trouble
- Neutral, starter lockout, or sidestand switch trouble
- Pickup coil trouble
- Ignition coil trouble
- Ignition switch or engine stop switch shorted
- Wiring shorted or open
- Fuse blown

Fuel/air mixture incorrect:
- Air cleaner clogged, poorly sealed, or missing

Compression Low:
- Spark plug loose
- Cylinder head not sufficiently tightened down
- Cylinder, piston worn
- Piston ring bad (worn, weak, broken, or sticking)
- Piston ring/groove clearance excessive
- Cylinder head gasket damaged
- Cylinder head warped
- Valve spring broken or weak
- Valve not seating properly (valve bent, worn, or carbon accumulation on the seating surface)
- Compression release cam (KACR) sticks open (Engine stalls when moving off)
- HLA (Hydraulic lash adjuster) damaged (worn, seizure, or spring broken)
- HLA oil passage clogged

Poor Running at Low Speed:

Spark weak:
- Battery voltage low
- Spark plug dirty, broken, or maladjusted
- Spark plug cap or high tension cable trouble
- Spark plug cap shorted or not in good contact
- Spark plug incorrect
- IC igniter in ECU trouble
- Pickup coil trouble
- Ignition coil trouble

Fuel/air mixture incorrect:
- Air cleaner clogged, poorly sealed, or missing
- Fuel tank air vent obstructed
- Throttle assy loose
- Throttle assy O-ring damage
- Air cleaner duct loose
- Air cleaner O-ring damaged

Downloaded from www.vulcanriders-sweden.org

Troubleshooting Guide (except DFI)

Fuel pump trouble
Compression low:
Spark plug loose
Cylinder head not sufficiently tightened down
Cylinder, piston worn
Piston ring bad (worn, weak, broken, or sticking)
Piston ring/groove clearance excessive
Cylinder head warped
Cylinder head gasket damaged
Valve spring broken or weak
Valve not seating properly (valve bent, worn, or carbon accumulation on the seating surface)
KACR sticks open (Motorcycle stalls when moving off)
HLA seizure
Backfiring when deceleration:
Vacuum switch valve broken
Air suction valve trouble
Other:
IC igniter in ECU trouble
Engine oil viscosity too high
Drive train trouble
Final gear case oil viscosity too high
Brake dragging
Engine overheating
Clutch slipping
Air suction valve trouble
Vacuum switch valve trouble

Poor Running or No Power at High Speed:

Firing incorrect:
Spark plug dirty, broken, or maladjusted
Spark plug cap or high tension cable trouble
Spark plug cap shorted or not in good contact
Spark plug incorrect
IC igniter in ECU trouble
Pickup coil trouble
Ignition coil trouble
Fuel/air mixture incorrect:
Air cleaner clogged, poorly sealed, or missing
Air cleaner duct loose
Air cleaner O-ring damaged
Water or foreign matter in fuel
Throttle assy loose
Throttle assy O-ring damage
Fuel to injector insufficient (DFI)
Fuel tank air vent obstructed
Fuel line clogged
Fuel pump trouble
Compression low:
Spark plug loose
Cylinder head not sufficiently tightened down
Cylinder, piston worn
Piston ring bad (worn, weak, broken, or sticking)
Piston ring/groove clearance excessive
Cylinder head gasket damaged
Cylinder head warped
Valve spring broken or weak
Valve not seating properly (valve bent, worn, or carbon accumulation on the seating surface.)
KACR sticks open (Motorcycle stalls when moving off)
HLA seizure
Knocking:
Carbon built up in combustion chamber
Fuel poor quality or incorrect (Be sure to use high-octane gasoline recommended in Owner's Manual)
Spark plug incorrect
IC igniter in ECU trouble
Miscellaneous:
Throttle valves won't fully open
Brake dragging
Clutch slipping
Engine overheating
Engine oil level too high
Engine oil viscosity too high
Drive train trouble
Final gear case oil viscosity too high
Air suction valve trouble
Vacuum switch valve trouble
Catalytic converters melt down due to muffler overheating (KLEEN)

Overheating:

Firing incorrect:
Spark plug dirty, broken, or maladjusted
Spark plug incorrect
IC igniter in ECU trouble
Muffler overheating:
For KLEEN, do not run the engine even if with only one cylinder misfiring or poor running (Request the nearest service facility to correct it)
For KLEEN, do not push-start with a dead battery (Connect another full-charged battery with jumper cables, and start the engine using the electric starter)
For KLEEN, do not start the engine under misfire due to spark plug fouling or poor connection of the spark plug
For KLEEN, do not coast the motorcycle with the ignition switch off (Turn the ignition switch ON and run the engine)
IC igniter in ECU trouble

Downloaded from www.vulcanriders-sweden.org

Troubleshooting Guide (except DFI)

Fuel/air mixture incorrect:
- Throttle assy loose
- Throttle assy O-ring damage
- Air cleaner duct loose
- Air cleaner poorly sealed, or missing
- Air cleaner O-ring damaged
- Air cleaner clogged

Compression high:
- Carbon built up in combustion chamber
- KACR sticks close

Engine load faulty:
- Clutch slipping
- Engine oil level too high
- Engine oil viscosity too high
- Drive train trouble
- Final gear case oil viscosity too high
- Brake dragging

Lubrication inadequate:
- Engine oil level too low
- Engine oil poor quality or incorrect

Water temperature warning system incorrect:
- Water temperature warning light broken
- Water temperature switch broken

Coolant incorrect:
- Coolant level too low
- Coolant deteriorated
- Wrong coolant mixed ratio

Cooling system component incorrect:
- Radiator fin damaged
- Radiator clogged
- Thermostat trouble
- Radiator cap trouble
- Radiator fan switch trouble
- Fan motor broken
- Fan blade damaged
- Water pump not turning
- Water pump impeller damaged

Over Cooling:

Cooling system component incorrect:
- Radiator fan switch trouble
- Thermostat trouble

Clutch Operation Faulty:

Clutch slipping:
- Friction plate worn or warped
- Steel plate worn or warped
- Spring plate free play maladjustment
- Clutch spring broken or weak
- Clutch slave cylinder trouble
- Clutch hub or housing unevenly worn
- Clutch master cylinder trouble

Clutch not disengaging properly:
- Clutch plate warped or too rough
- Spring plate free play maladjustment
- Engine oil deteriorated
- Engine oil viscosity too high
- Engine oil level too high
- Clutch housing frozen on drive shaft
- Clutch slave cylinder trouble
- Clutch hub nut loose
- Clutch hub spline damaged
- Clutch friction plate installed wrong
- Clutch fluid leakage
- Clutch fluid deteriorated
- Clutch master cylinder primary or secondary cup damaged
- Clutch master cylinder scratched inside
- Air in the clutch fluid line

Gear Shifting Faulty:

Doesn't go into gear; shift pedal doesn't return:
- Clutch not disengaging
- Shift fork bent or seized
- Gear stuck on the shaft
- Gear set lever binding
- Shift return spring weak or broken
- Shift return spring pin loose
- Shift mechanism arm spring broken
- Shift mechanism arm broken

Jumps out of gear:
- Shift fork ear worn, bent
- Gear groove worn
- Gear dogs and/or dog holes worn
- Shift drum groove worn
- Gear set lever spring weak or broken
- Shift fork guide pin worn
- Drive shaft, output shaft, and/or gear splines worn

Overshifts:
- Gear set lever spring weak or broken
- Shift mechanism arm spring broken

Abnormal Engine Noise:

Knocking:
- IC igniter in ECU trouble
- Carbon built up in combustion chamber
- Fuel poor quality or incorrect (Be sure to use high-octane gasoline recommended in Owner's Manual)
- Spark plug incorrect
- Overheating

Piston slap:
- Cylinder/piston clearance excessive
- Cylinder, piston worn
- Connecting rod bent
- Piston pin, piston pin hole worn

Valve noise:
- Engine not sufficiently warmed up after HLA installation
- HLA damaged (worn, seizure, or spring broken)

Downloaded from www.vulcanriders-sweden.org

Troubleshooting Guide (except DFI)

HLA aeration due to low oil level
Air in HLA
Metal chips or dust jammed in HLA
Engine operated in red zone
Valve spring broken or weak
Camshaft bearing portion worn

Other noise:
Connecting rod small end clearance excessive
Connecting rod big end clearance excessive
Piston ring worn, broken, or stuck
Piston seizure, damage
Cylinder head gasket leaking
Exhaust pipe leaking at cylinder head connection
Crankshaft runout excessive
Engine mounts loose
Crankshaft bearing worn
Primary gear worn or chipped
Camshaft chain tensioner trouble
Camshaft chain, sprocket, guide worn
Air suction valve damaged
Vacuum switch valve damaged
Alternator rotor loose
Catalytic converters melt down due to muffler overheating (KLEEN)
Balancer gear worn or chipped
Balancer shaft position maladjusted
Balancer bearing worn
Balancer shaft coupling rubber damper damaged
Water pump chain, sprocket worn

Abnormal Drive Train Noise:

Clutch noise:
Clutch rubber damper weak or damaged
Clutch housing/friction plate clearance excessive
Clutch housing gear worn
Wrong installation of outside friction plate

Transmission noise:
Bearings worn
Transmission gears worn or chipped
Metal chips jammed in gear teeth
Engine oil insufficient

Drive line noise:
Bevel gear bearings worn
Bevel gears worn or chipped
Bevel gears maladjusted
Rear wheel coupling damaged
Final gear case oil level too low or oil too thin
Insufficient grease in propeller shaft joint

Abnormal Frame Noise:

Front fork noise:
Oil insufficient or too thin
Spring weak or broken

Rear shock absorber noise:
Shock absorber damaged

Disc brake noise:
Pad installed incorrectly
Pad surface glazed
Disc warped
Caliper trouble
Master cylinder damaged

Other noise:
Bracket, nut, bolt, etc. not properly mounted or tightened

Oil Pressure Warning Light Goes On:

Engine oil pump damaged
Engine oil screen clogged
Engine oil filter clogged
Engine oil level too low
Engine oil viscosity too low
Camshaft bearing portion worn
Crankshaft bearings worn
Oil pressure switch damaged
Oil pressure switch lead damaged
Relief valve stuck open
O-ring at the oil pipe in the crankcase damaged

Exhaust Smokes Excessively:

White smoke:
Piston oil ring worn
Cylinder worn
Valve oil seal damaged
Valve guide worn
Engine oil level too high

Black smoke:
Air cleaner clogged
Choke knob left pulled out

Brown smoke:
Air cleaner duct loose
Air cleaner O-ring damaged
Air cleaner poorly sealed or missing

Handling and/or Stability Unsatisfactory:

Handlebar hard to turn:
Cable routing incorrect
Hose routing incorrect
Wiring routing incorrect
Steering stem nut too tight
Steering stem bearing damaged
Steering stem bearing lubrication inadequate
Steering stem bent

Downloaded from www.vulcanriders-sweden.org

Troubleshooting Guide (except DFI)

Tire air pressure too low

Handlebar shakes or excessively vibrates:
Tire worn
Swingarm sleeve or pivot bearings worn
Wheel rim warped, or not balanced
Spokes loose
Wheel bearing worn
Handlebar clamp bolts loose
Steering stem head nut loose
Front, rear axle runout excessive

Handlebar pulls to one side:
Frame bent
Swingarm bent or twisted
Swingarm pivot shaft runout excessive
Steering maladjusted
Front fork bent
Right and left front fork oil level uneven

Shock absorption unsatisfactory:
(Too hard)
Front fork oil excessive
Front fork oil viscosity too high
Rear shock absorber adjustment too hard
Tire air pressure too high
Front fork bent
(Too soft)
Tire air pressure too low
Front fork oil insufficient and/or leaking
Front fork oil viscosity too low
Rear shock adjustment too soft
Front fork, rear shock absorber spring weak
Rear shock absorber oil leaking

Brake Doesn't Hold:
Air in the brake line
Pad or disc worn
Brake fluid leakage
Disc warped
Contaminated pad
Brake fluid deteriorated
Primary or secondary cup damaged in master cylinder
Master cylinder scratched inside

Battery Trouble:
Battery discharged:
Charge insufficient
Battery faulty (too low terminal voltage)
Battery leads making poor contact
Load excessive (e.g., bulb of excessive wattage)
Ignition switch trouble
Alternator trouble
Wiring faulty
Regulator/rectifier trouble

Battery overcharged:
Alternator trouble
Regulator/rectifier trouble
Battery faulty

Downloaded from www.vulcanriders-sweden.org

General Lubrication

Lubrication (Periodic Maintenance)

- Before lubricating each part, clean off any rusty spots with rust remover and wipe off any grease, oil, dirt, or grime.
- Lubricate the points listed below with indicated lubricant.

NOTE

○*Perform the general lubrication in accordance with the Periodic Maintenance Chart or whenever the vehicle has been operated under wet or rainy conditions, or especially after using a high -pressure water spray.*

Pivots: Lubricate with Engine Oil.
Rear Brake Rod Joint

Points: Lubricate with Grease.
Throttle Cable Upper Ends [A]
Brake Pedal
Clutch Lever (Apply silicone grease)
Brake Lever (Apply silicone grease)
Sidestand
(*): Grease the lower part of the inner cable sparingly.

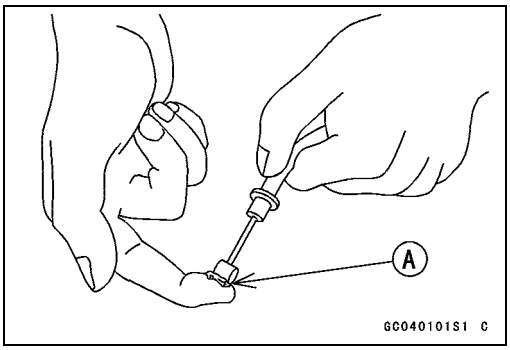

Cables: Lubricate with Cable Lubricant.
Choke Inner Cable
Throttle Inner Cables

- Lubricate the cables by seeping the oil between the cable and housing.

○The cable may be lubricated by using a commercially available pressure cable lubricator [A] with an aerosol cable lubricant [B].

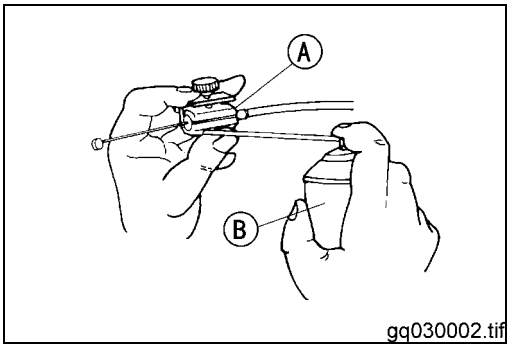

- With the cable disconnected at both ends, the cable should move freely [A] within the cable housing.

★If cable movement is not free after lubricating, if the cable is frayed [B], or if the cable housing is kinked [C], replace the cable.

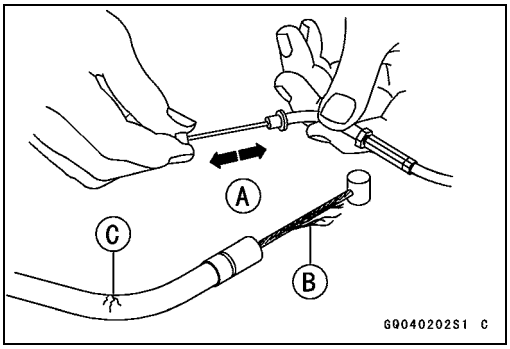

Downloaded from www.vulcanriders-sweden.org

Nut, Bolt, and Fastener Tightness

Tightness Inspection (Periodic Inspection)

● Check the tightness of the bolts and nuts listed here in accordance with the Periodic Maintenance Chart. Also, check to see that each cotter pin is in place and in good condition.

NOTE

○*For the engine fasteners, check the tightness of them when the engine is cold (at room temperature).*

★If there are loose fasteners, retighten them to the specified torque following the specified tightening sequence. Refer to the Torque and Locking Agent section of the General Information chapter for torque specifications. For each fastener, first loosen it by 1/2 turn, then tighten it.

★If cotter pins are damaged, replace them with new ones.

Nut, Bolt and Fastener to be checked

Wheels:
- Front Axle Nut
- Front Axle Clamp Bolt
- Rear Axle Nut Cotter Pin
- Rear Axle Nut

Final Drive:
- Final Gear Case Mounting Nuts

Brakes:
- Front Master Cylinder Clamp Bolts
- Caliper Mounting Bolts
- Rear Master Cylinder Mounting Bolts
- Rear Caliper Holder Bolt
- Brake Lever Pivot Nut
- Brake Pedal Bolt
- Brake Rod Joint Cotter Pin

Suspension:
- Front Fork Clamp Bolts
- Rear Shock Absorber Mounting Nuts
- Swingarm Pivot Shaft

Steering:
- Steering Stem Head Nut
- Handlebar Clamp Bolts

Engine:
- Throttle Cable Adjuster Locknuts
- Engine Mounting Bolts and Nuts
- Shift Pedal Bolts
- Muffler Mounting Bolts and Nuts
- Exhaust Pipe Holder Nuts
- Clutch Master Cylinder Clamp Bolts
- Clutch Lever Pivot Nut
- Radiator Mounting Bolt

Others:
- Sidestand Bolt and Nut
- Footboard Bracket Bolts (front)
- Footpeg Bracket Bolts (rear)
- Downtube Bolts (Right)
- Front Fender Mounting Bolts

Downloaded from www.vulcanriders-sweden.org

Unit Conversion Table

Prefixes for Units:

Prefix	Symbol	Power
mega	M	× 1 000 000
kilo	k	× 1 000
centi	c	× 0.01
milli	m	× 0.001
micro	μ	× 0.000001

Units of Mass:

kg	×	2.205	=	lb
g	×	0.03527	=	oz

oz: ounce

Units of Volume:

L	×	0.2642	=	gal (US)
L	×	0.2200	=	gal (imp)
L	×	1.057	=	qt (US)
L	×	0.8799	=	qt (imp)
L	×	2.113	=	pint (US)
L	×	1.816	=	pint (imp)
mL	×	0.03381	=	oz (US)
mL	×	0.02816	=	oz (imp)
mL	×	0.06102	=	cu in

imp: imperial unit

Units of Force:

N	×	0.1020	=	kg
N	×	0.2248	=	lb
kg	×	9.80665	=	N
kg	×	2.205	=	lb

Units of Length:

km	×	0.6214	=	mile
m	×	3.281	=	ft
mm	×	0.03937	=	in

Units of Torque:

N·m	×	0.101972	=	kgf·m
N·m	×	0.7376	=	ft·lb
N·m	×	8.851	=	in·lb
kgf·m	×	9.80665	=	N·m
kgf·m	×	7.233	=	ft·lb
kgf·m	×	86.80	=	in·lb

Units of Pressure:

kPa	×	0.01020	=	kgf/cm²
kPa	×	0.1450	=	psi
kPa	×	0.7501	=	cm Hg
kgf/cm²	×	98.0665	=	kPa
kgf/cm²	×	14.22	=	psi
cm Hg	×	1.333	=	kPa

Units of Speed:

km/h	×	0.6214	=	mph

Units of Power:

kW	×	1.360	=	PS
kW	×	1.341	=	HP
PS	×	0.7355	=	kW
PS	×	0.9863	=	HP

Units of Temperature:

$(^\circ C) \times \frac{9}{5} + 32 = {}^\circ F$ $(^\circ F) \times \frac{5}{9} - \frac{160}{9} = {}^\circ C$

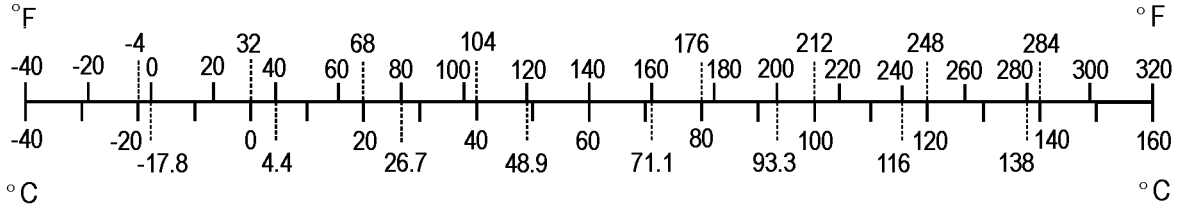

Downloaded from www.vulcanriders-sweden.org

MODEL APPLICATION

Year	Model	Beginning Frame No.
2000	VN1500-N1	JKBVNAN1□YA000001 (Australia, Canada, US), JKBVNT50NNA000001 (General)
2001	VN1500-N2	JKBVNAN1□1A009001 (Australia, Canada, US), JKBVNT50NNA009001 (General)
2002	VN1500-N3	JKBVNAN1□2A015001 (Australia, Canada, US), JKBVNT50NNA015001 (General)
2005	VN1500-N4	JKBVNAN1□5A019001
2006	VN1500N6F	JKBVNAN1□6A025001
2006	VN1500T6F	JKBVNAT1□6A000001
2007	VN1500N7F	JKBVNAN1□7A028001
2008	VN1500N8F	JKBVNAN1□8A032001

□:This digit in the frame number changes from one machine to another.

Downloaded from www.vulcanriders-sweden.org