Kawasaki

VULCAN NOMAD

VN1500 CLASSIC TOURER



Motorcycle Service Manual

Kawasaki

VULCAN NOMAD
VN1500 CLASSIC TOURER

Motorcycle Service Manual

All rights reserved. No parts of this publication may be reproduced, stored in a retrieval system, or transmitted in any form or by any means, electronic mechanical photocopying, recording or otherwise, without the prior written permission of Quality Assurance Department/Consumer Products & Machinery Group/Kawasaki Heavy Industries, Ltd., Japan.

No liability can be accepted for any inaccuracies or omissions in this publication, although every possible care has been taken to make it as complete and accurate as possible.

The right is reserved to make changes at any time without prior notice and without incurring an obligation to make such changes to products manufactured previously. See your Motorcycle dealer for the latest information on product improvements incorporated after this publication.

All information contained in this publication is based on the latest product information available at the time of publication. Illustrations and photographs in this publication are intended for reference use only and may not depict actual model component parts.

© Kawasaki Heavy Industries, Ltd., 1998, 2000

Second Edition (1) :Dec. 28, 2000 (K)

LIST OF ABBREVIATIONS

A	ampere(s)	lb	pound(s)
ABDC	after bottom dead center	m	meter(s)
AC	alternating current	min	minute(s)
ATDC	after top dead center	N	newton(s)
BBDC	before bottom dead center	Pa	pascal(s)
BDC	bottom dead center	PS	horsepower
BTDC	before top dead center	psi	pound(s) per square inch
°C	degree(s) Celsius	r	revolution
DC	direct current	rpm	revolution(s) per minute
F	farad(s)	TDC	top dead center
°F	degree(s) Fahrenheit	TIR	total indicator reading
ft	foot, feet	V	volt(s)
g	gram(s)	W	watt(s)
h	hour(s)	Ω	ohm(s)
L	liter(s)		

Read OWNER'S MANUAL before operating.

EMISSION CONTROL INFORMATION

To protect the environment in which we all live, Kawasaki has incorporated crankcase emission (1) and exhaust emission (2) control systems in compliance with applicable regulations of the United States Environmental Protection Agency and California Air Resources Board. Additionally, Kawasaki has incorporated an evaporative emission control system (3) in compliance with applicable regutations of the California Air Resources Board on vehicles sold in California only.

1. Crankcase Emission Control System
   This system eliminates the release of cranckcase vapors into the atmosphere. Instead, the vapors are routed through an oil separator to the intake side of the engine. While the engine is operating, the vapors are drawn into combustion chamber, where they are burned along with the fuel and air supplied by the carburetion system.
2. Exhaust Emission Control System
   This system reduces the amount of pollutants discharged into the atmosphere by the exhaust of this motorcycle. The fuel, ignition, and exhaust systems of this motorcycle have been carefully designed and constructed to ensure an efficient engine with low exhaust pollutant levels.
3. Evaporative Emission Control System
   Vapors caused by fuel evaporation in the fuel system are not vented into the atmosphere. Instead, fuel vapors are routed into the running engine to be burned, or stored in a canister when the engine is stopped. Liquid fuel is caught by a vapor separator and returned to the fuel tank.

The Clean Air Act, which is the Federal law covering motor vehicle pollution, contains what is commonly referred to as the Act's "tampering provisions."

"Sec. 203(a) The following acts and the causing thereof are prohibited...

(3)(A) for any person to remove or render inoperative any device or element of design installed on or in a motor vehicle or motor vehicle engine in compliance with regulations under this title prior to its sale and delivery to the ultimate purchaser, or for any manufacturer or dealer knowingly to remove or render inoperative any such device or element of design after such sale and delivery to the ultimate purchaser.

(3)(B) for any person engaged in the business of repairing, servicing, selling, leasing, or trading motor vehicles or motor vehicle engines, or who operates a fleet of motor vehicles knowingly to remove or render inoperative any device or element of design installed on or in a motor vehicle or motor vehicle engine in compliance with regulations under this title following its sale and delivery to the ultimate purchaser..."

(Continued on next page.)

NOTE

The phrase "remove or render inoperative any device or element of design" has been generally interpreted as follows:

1. *Tampering does not include the temporary removal or rendering inoperative of devices or elements of design in order to perform maintenance.*
2. *Tampering could include:*
   a. *Maladjustment of vehicle components such that the emission standards are exceeded.*
   b. *Use of replacement parts or accessories which adversely affect the performance or durability of the motorcycle.*
   c. *Addition of components or accessories that result in the vehicle exceeding the standards.*
   d. *Permanently removing, disconnecting, or rendering inoperative any component or element of design of the emission control systems.*

WE RECOMMEND THAT ALL DEALERS OBSERVE THESE PROVISIONS OF FEDERAL LAW, THE VIOLATION OF WHICH IS PUNISHABLE BY CIVIL PENALTIES NOT EXCEEDING $10,000 PER VIOLATION.

TAMPERING WITH NOISE CONTROL SYSTEM PROHIBITED

Fedearl law prohibits the following acts or the causing thereof: (1) The removal or rendering inoperative by any person other than for purposes of maintenance, repair, or replacement, of any device or element of design incorporated into any new vehicle for the purpose of noise control prior to its sale or delivery to the ultimate purchaser or while it is in use, or (2) the use of the vehicle after such device or element of design has been removed or rendered inoperative by any person.

Among those acts presumed to constitute tampering are the acts listed below:

- Replacement of the original exhaust system or muffler with a component not in compliance with Federal regulations.
- Removal of the muffler(s) or any internal portion of the muffler(s).
- Removal of the air box or air box cover.
- Modifications to the muffler(s) or air intake system by cutting, drilling, or other means if such modifications result in increased noise levels.

Foreword

This manual is designed primarily for use by trained mechanics in a properly equipped shop. However, it contains enough detail and basic information to make it useful to the owner who desires to perform his own basic maintenance and repair work. A basic knowledge of mechanics, the proper use of tools, and workshop procedures must be understood in order to carry out maintenance and repair satisfactorily. Whenever the owner has insufficient experience or doubts his ability to do the work, all adjustments, maintenance, and repair should be carried out only by qualified mechanics.

In order to perform the work efficiently and to avoid costly mistakes, read the text, thoroughly familiarize yourself with the procedures before starting work, and then do the work carefully in a clean area. Whenever special tools or equipment are specified, do not use makeshift tools or equipment. Precision measurements can only be made if the proper instruments are used, and the use of substitute tools may adversely affect safe operation.

For the duration of the warranty period, we recommend that all repairs and scheduled maintenance be performed in accordance with this service manual. Any owner maintenance or repair procedure not performed in accordance with this manual may void the warranty.

To get the longest life out of your vehicle:

- Follow the Periodic Maintenance Chart in the Service Manual.
- Be alert for problems and non-scheduled maintenance.
- Use proper tools and genuine Kawasaki Motorcycle parts. Special tools, gauges, and testers that are necessary when servicing Kawasaki motorcycles are introduced by the Special Tool Catalog or Manual. Genuine parts provided as spare parts are listed in the Parts Catalog.
- Follow the procedures in this manual carefully. Don't take shortcuts.
- Remember to keep complete records of maintenance and repair with dates and any new parts installed.

How to Use This Manual

In preparing this manual, we divided the product into its major systems. These systems became the manual's chapters. All information for a particular system from adjustment through disassembly and inspection is located in a single chapter.

The Quick Reference Guide shows you all of the product's system and assists in locating their chapters. Each chapter in turn has its own comprehensive Table of Contents.

The Periodic Maintenance Chart is located in the General Information chapter. The chart gives a time schedule for required maintenance operations.

If you want spark plug information, for example, go to the Periodic Maintenance Chart first. The chart tells you how frequently to clean and gap the plug. Next, use the Quick Reference Guide to locate the Electrical System chapter. Then, use the Table of Contents on the first page of the chapter to find the Spark Plug section.

Whenever you see these WARNING and CAUTION symbols, heed their instructions! Always follow safe operating and maintenance practices.

⚠WARNING

This warning symbol identifies special instructions or procedures which, if not correctly followed, could result in personal injury, or loss of life.

CAUTION

This caution symbol identifies special instructions or procedures which, if not strictly observed, could result in damage to or destruction of equipment.

This manual contains four more symbols (in addition to WARNING and CAUTION) which will help you distinguish different types of information.

NOTE

This note symbol indicates points of particular interest for more efficient and convenient operation.

- Indicates a procedural step or work to be done.
  Indicates a procedural sub-step or how to do the work of the procedural step it follows. It also precedes the text of a NOTE.
- ★ Indicates a conditional step or what action to take based on the results of the test or inspection in the procedural step or sub-step it follows.

In most chapters an exploded view illustration of the system components follows the Table of Contents. In these illustrations you will find the instructions indicating which parts require specified tightening torque, oil, grease or a locking agent during assembly.

1

General Information

Table of Contents

Before Servicing 1-2
Model Identification 1-4
General Specifications 1-8
Periodic Maintenance Chart 1-12
Technical Information – K-TRIC (Kawasaki Throttle Responsive Ignition Control) 1-13
Technical Information – KAWASAKI LOW EXHAUST EMISSION for VN1500H/G1A (CA) 1-14
Torque and Locking Agent 1-21
Special Tools and Sealant 1-25
Cable, Wire, and Hose Routing 1-32

1-2 GENERAL INFORMATION

Before Servicing

Before starting to perform an inspection service or carry out a disassembly and reassembly operation on a motorcycle, read the precautions given below. To facilitate actual operations, notes, illustrations, photographs, cautions, and detailed descriptions have been included in each chapter wherever necessary. This section explains the items that require particular attention during the removal and reinstallation or disassembly and reassembly of general parts.

Especially note the following:

(1) Dirt

Before removal and disassembly, clean the motorcycle. Any dirt entering the engine will shorten the life of the motorcycle. For the same reason, before installing a new part, clean off any dust or metal filings.

(2) Battery Ground

Disconnect the ground (–) wire from the battery before performing any disassembly operations on the motorcycle. This prevents the engine from accidentally turning over while work is being carried out, sparks from being generated while disconnecting the wires from electrical parts, as well as damage to the electrical parts themselves. For reinstallation, first connect the positive wire to the positive (+) terminal of the battery

(3) Installation, Assembly

Generally, installation or assembly is the reverse of removal or disassembly. However, if installation or assembly sequence is given in this Service Manual, follow it. Note parts locations and cable, wire, and hose routing during removal or disassembly so they can be installed or assembled in the same way. It is preferable to mark and record the locations and routing whenever possible.

(4) Tightening Sequence

When installing bolts, nuts, or screws for which a tightening sequence is given in this Service Manual, make sure to follow the sequence. When installing a part with several bolts, nuts, or screws, start them all in their holes and tighten them to a snug fit, thus ensuring that the part has been installed in its proper location. Then, tighten them to the specified torque in the tightening sequence and method indicated. If tightening sequence instructions are not given, tighten them evenly in a cross pattern. Conversely, to remove a part, first loosen all the bolts, nuts, or screws that are retaining the part a 1/4–turn before removing them.

(5) Torque

When torque values are given in this Service Manual, use them. Either too little or too much torque may lead to serious damage. Use a good quality, reliable torque wrench.

(6) Force

Common sense should dictate how much force is necessary in assembly and disassembly. If a part seems especially difficult to remove or install, stop and examine what may be causing the problem. Whenever tapping is necessary, tap lightly using a wooden or plastic-faced mallet. Use an impact driver for screws (particularly for the removing screws held by non-permanent locking agent) in order to avoid damaging the screw heads.

(7) Edges

Watch for sharp edges, as they could cause injury through careless handling, especially during major engine disassembly and assembly. Use a clean piece of thick cloth when lifting the engine or turning it over.

(8) High-Flash Point Solvent

A high-flash point solvent is recommended to reduce fire danger. A commercial solvent commonly available in North America is standard solvent (generic name). Always follow manufacturer and container directions regarding the use of any solvent.

(9) Gasket, O-Ring

Replace a gasket or an O-ring with a new part when disassembling. Remove any foreign matter from the mating surface of the gasket or O-ring to ensure a perfectly smooth surface to prevent oil or compression leaks.

(10) Liquid Gasket, Locking Agent

Clean and prepare surfaces where liquid gasket or non-permanent locking agent will be used. Apply them sparingly. Excessive amount may block engine oil passages and cause serious damage.

(11) Press

When using a press or driver to install a part such as a wheel bearing, apply a small amount of oil to the area where the two parts come in contact to ensure a smooth fit.

(12) Ball Bearing and Needle Bearing

Do not remove a ball bearing or a needle bearing unless it is absolutely necessary. Replace any ball or needle bearings that were removed with new ones. Install bearings with the manufacturer and size marks facing out, applying pressure evenly with a suitable driver. Apply force only to the end of the race that contacts the press fit portion, and press it evenly over the base component.

(13) Oil Seal and Grease Seal

Replace any oil or grease seals that were removed with new ones, as removal generally damages seals. Oil or grease seals should be pressed into place using a suitable driver, applying a force uniformly to the end of seal until the face of the seal is even with the end of the hole, unless instructed otherwise. When pressing in an oil or grease seal which has manufacturer's marks, press it in with the marks facing out.

Before Servicing

(14) Circlip, Retaining Ring, and Cotter Pin

When installing circlips and retaining rings, take care to compress or expand them only enough to install them and no more. Install the circlip with its chamfered side facing load side as well.

Replace any circlips, retaining rings, and cotter pins that were removed with new ones, as removal weakens and deforms them. If old ones are reused, they could become detached while the motorcycle is driven, leading to a major problem.

(15) Lubrication

Engine wear is generally at its maximum while the engine is warming up and before all the sliding surfaces have an adequate lubricative film. During assembly, make sure to apply oil to any sliding surface or bearing that has been cleaned. Old grease or dirty oil could have lost its lubricative quality and may contain foreign particles that act as abrasives; therefore, make sure to wipe it off and apply fresh grease or oil. Some oils and greases in particular should be used only in certain applications and may be harmful if used in an application for which they are not intended.

(16) Direction of Engine Rotation

To rotate the crankshaft manually, make sure to do so in the direction of positive rotation. Positive rotation is counterclockwise as viewed from the left side of the engine. To carry out proper adjustment, it is furthermore necessary to rotate the engine in the direction of positive rotation as well.

(17) Replacement Parts

When there is a replacement instruction, replace these parts with new ones every time they are removed.

Replacement parts will be damaged or lose their original function once they are removed. Therefore, always replace these parts with new ones every time they are removed. Although the previously mentioned gasket, O-ring, ball bearing, needle bearing, grease seal, oil seal, circlip, and cotter pin have not been so designated in their respective text, they are replacement parts.

(18) Electrical Wires

All the electrical wires are either one-color or two-color. A two-color wire is identified first by the primary color and then the stripe color. For example, a yellow wire with thin red stripes is referred to as a "yellow/red" wire; it would be a "red/yellow" wire if the colors were reversed. Unless instructed otherwise, electrical wires must be connected to wires of the same color.

Two-Color Electrical

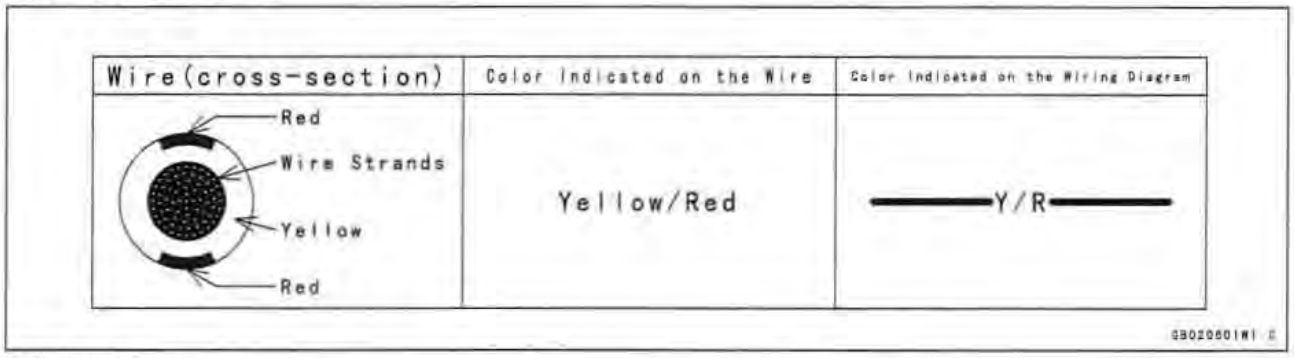

(19) Inspection

When parts have been disassembled, visually inspect these parts for the following conditions or other damage. If there is any doubt as to the condition of them, replace them with new ones.

Abrasion	Crack	Hardening	Warp
Bent	Dent	Scratch	Wear
Color change	Deterioration	Seizure	

(20) Specifications

Specification terms are defined as follows:

"Standards" show dimensions or performances which brand-new parts or systems have.

"Service Limits" indicate the usable limits. If the measurement shows excessive wear or deteriorated performance, replace the damaged parts.

Model Identification

VN1500-G1 (US and Canada) Left Side View:



VN1500-G1 (US and Canada) Right Side View:



Model Identification

VN1500-G1 (Australia) Left Side View:



VN1500-G1 (Australia) Right Side View:



VN1500-G1 (Other than US, Canada, and Australia) Left Side View:



VN1500-G1 (Other than US, Canada, and Australia) Right Side View:



Model Identification

VN1500-H1 (Germany, Austria, and Switzerland) Left Side View:



VN1500-H1 (Germany, Austria, and Switzerland) Right Side View:



General Specifications

Items		VN1500-G1/G1A/G2	VN1500-H1/H2
Dimensions:			
Overall length		2510 mm	← – –
Overall width		960 mm	← – –
Overall height		1480 mm (max) ~ 1435 mm (min), (AS) (ML) (US) 1430 mm	1480 mm (max) ~ 1435 mm (min), (FG) 1405 mm (max) ~ 1360 mm (min)
Wheelbase		1665 mm	← – –
Road clearance		135 mm	← – –
Seat height		720 mm	← – –
Dry mass		331 kg, (CA) 329.5kg, (US) 329 kg	331 kg
Curb mass:	Front	152 kg, (US) 150 kg	152 kg
	Rear	197 kg, (CA) 197.5 kg	197 kg
Fuel tank capacity		16 L	← – –
Performance:			
Minimum turning radius		3.2 m	← – –
Engine:			
Type		4-stroke, SOHC, V2-cylinder	← – –
Cooling system		Liquid-cooled	← – –
Bore and stroke		102 × 90 mm	← – –
Displacement		1470 mL	← – –
Compression ratio		8.6 : 1	← – –
Maximum horsepower		47 kW (64 PS) @4700 r/min (rpm) (US) –	47 kW (64 PS) @4700 r/min (rpm) H1 Model: (ST) 32.0 kW (43.5 PS) @3400 r/min (rpm)
Maximum torque		112 N·m (11.4 kg·m, 82.5 ft·lb) @3000 r/min (rpm) (US) –	112 N·m (11.4 kg·m, 82.5 ft·lb) @3000 r/min (rpm) H1 Model: (ST) 98 N·m (10 kg·m, 72.3 ft·lb) @2000 r/min (rpm)
Carburetion system		Carburetor, Keihin CVK40 × 1	← – –
Starting system		Electric starter	← – –
Ignition system		Battery and coil (transistorized)	← – –
Timing advance		Electronically advanced (digital)	← – –
Ignition timing		From 0° BTDC @800 r/min (rpm), (CA) From 0° BTDC @1000 r/min (rpm)	From 0° BTDC @1000 r/min (rpm)
Spark plugs		NGK DPR5EA-9 or ND X16EPR-U9	← – –
Cylinder numbering method		Front to Rear, 1-2	← – –
Firing order		1-2	← – –
Valve timing:			
Inlet	Open	18° BTDC	← – –
	Close	62° ABDC	← – –
	Duration	260°	← – –
Exhaust	Open	62° BBDC	← – –
	Close	22° ATDC	← – –
	Duration	264°	← – –
Lubrication system		Forced lubrication (wet sump)	← – –
Engine oil:	Grade	SE, SF, or SG class	
	Viscosity	SAE10W-40, 10W-50,	← – –
		20W-40, or 20W-50	← – –
	Capacity	3.5 L (when engine is completely dry)	← – –

General Specifications

Items		VN1500-G1/G1A/G2	VN1500-H1/H2
Drive Train:			
Primary reduction system:			
Type		Gear	← – –
Reduction ratio		1.517 (85/56)	← – –
Clutch type		Wet multi disc	← – –
Transmission:			
Type		5-speed, constant mesh, return shift	← – –
Gear ratios:	1st	2.500 (40/16)	← – –
	2nd	1.590 (35/22)	← – –
	3rd	1.192 (31/26)	← – –
	4th	0.965 (28/29)	← – –
	5th	0.781 (25/32)	← – –
Final drive system:			
Type		Shaft	← – –
Reduction ratio		2.619 (15/21 × 33/9)	← – –
Overall drive ratio		3.105 @Top gear	← – –
Final gear case oil:			
Type		API GL-5 Hypoid gear oil SAE90 (above 5°C) SAE80 (below 5°C)	← – –
Capacity		200 mL	← – –
Frame:			
Type		Tubular, double cradle	← – –
Caster (rake angle)		32°	← – –
Trail		189 mm	← – –
Front tire:	Type	Tubeless	← – –
	Size	150/80-16 71H	← – –
Rear tire:	Type	Tubeless	← – –
	Size	150/80-16 71H	← – –
Front suspension:	Type	Telescopic fork	← – –
	Wheel travel	150 mm	← – –
Rear suspension:	Type	Swingarm	← – –
	Wheel travel	100 mm	← – –
Brake Type:	Front	Dual discs	← – –
	Rear	Single disc	← – –
Electrical Equipment:			
Battery		12 V 14 Ah	← – –
Headlight:	Type	Semi-sealed beam	← – –
	Bulb	12 V 60/55 W (quartz-halogen)	← – –
Tail/brake light		12 V 5/21 W × 2, (US) (CN) 12 V 8/27 W × 2	12 V 5/21 W × 2
Alternator:	Type	Three-phase AC	← – –
	Rated output	42 A × 14 V @6000 r/min (rpm)	← – –

Specifications are subject to change without notice, and may not apply to every country.

AS : Australian Model
CA : California Model
CN : Canadian Model
FG : German Model
ML : Malaysian Model
ST : Swiss Model
US : U.S.A. Model

General Specifications

Items		VN1500-G2A~
Dimensions:		
Overall length		2510 mm
Overall width		960 mm
Overall height		1430 mm
Wheelbase		1665 mm
Road clearance		135 mm
Seat height		720 mm
Dry mass		332 kg, (CA) 332.5 kg
Curb mass:	Front	153 kg
	Rear	197 kg, (CA) 197.5 kg
Fuel tank capacity		16 L
Performance:		
Minimum turning radius		3.2 m
Engine:		
Type		4-stroke, SOHC, V2-cylinder
Cooling system		Liquid-cooled
Bore and stroke		102 × 90 mm
Displacement		1470 mL
Compression ratio		8.6 : 1
Maximum horsepower		(US) –
Maximum torque		(US) –
Carburetion system		Carburetor, Keihin CVK40 × 1
Starting system		Electric starter
Ignition system		Battery and coil (transistorized)
Timing advance		Electronically advanced (digital)
Ignition timing		From 0° BTDC @800 r/min (rpm), (CA) From 0° BTDC @1000 r/min (rpm)
Spark plugs		NGK DPR5EA-9 or ND X16EPR-U9
Cylinder numbering method		Front to Rear, 1-2
Firing order		1-2
Valve timing:		
Inlet	Open	18° BTDC
	Close	62° ABDC
	Duration	260°
Exhaust	Open	62° BBDC
	Close	22° ATDC
	Duration	264°
Lubrication system		Forced lubrication (wet sump)
Engine oil:	Grade	API SE, SF, or SG class, or API SH or SJ with JASO MA
	Viscosity	SAE10W-40, 10W-50, 20W-40, or 20W-50
	Capacity	3.5 L (when engine is completely dry)

General Specifications

Items		VN1500-G2A -
Drive Train:		
Primary reduction system:		
Type		Gear
Reduction ratio		1.517 (85/56)
Clutch type		Wet multi disc
Transmission:		
Type		5-speed, constant mesh, return shift
Gear ratios:	1st	2.500 (40/16)
	2nd	1.590 (35/22)
	3rd	1.192 (31/26)
	4th	0.965 (28/29)
	5th	0.781 (25/32)
Final drive system:		
Type		Shaft
Reduction ratio		2.619 (15/21 × 33/9)
Overall drive ratio		3.105 @Top gear
Final gear case oil:		
Type		API GL-5 Hypoid gear oil SAE90 (above 5°C) SAE80 (below 5°C)
Capacity		200 mL
Frame:		
Type		Tubular, double cradle
Caster (rake angle)		32°
Trail		189 mm
Front tire:	Type	Tubeless
	Size	150/80-16 71H
Rear tire:	Type	Tubeless
	Size	150/80B16 71H
Front suspension:	Type	Telescopic fork
	Wheel travel	150 mm
Rear suspension:	Type	Swingarm
	Wheel travel	100 mm
Brake Type:	Front	Dual discs
	Rear	Single disc
Electrical Equipment:		
Battery		12 V 14 Ah
Headlight:	Type	Semi-sealed beam
	Bulb	12 V 60/55 W (quartz-halogen)
Tail/brake light		12 V 5/21 W × 2,
Alternator:	Type	Three-phase AC
	Rated output	42 A × 14 V @6000 r/min (rpm)

Specifications are subject to change without notice, and may not apply to every country.
CA : California Model

Periodic Maintenance Chart

The scheduled maintenance must be done in accordance with this chart to keep the motorcycle in good running condition.
The initial maintenance is vitally important and must not be neglected.

FREQUENCY / OPERATION	Whichever comes first → ↓ / Every	1 000 km (600 mile)	6 000 km (4 000 mile)	12 000 km (7 500 mile)	18 000 km (12 000 mile)	24 000 km (15 000 mile)	30 000 km (20 000 mile)	36 000 km (24 000 mile)	* ODOMETER READING
Spark plug - clean and gap †			●	●	●	●	●	●	
Air suction valve - check †			●	●	●	●	●	●	
Air cleaner element - clean† #				●		●		●	
Throttle grip play - check †		●		●		●		●	
Idle speed - adjust		●		●		●		●	
Evaporative emission control system (CA) - check †		●	●	●	●	●	●	●	
Fuel hoses, connections - check †			●	●	●	●	●	●	
Engine oil - change #	6 months	●	●	●	●	●	●	●	
Oil filter - replace		●		●		●		●	
Radiator hoses, connections - check †		●							
Coolant - change	2 years					●			
Final gear case oil level - check †				●		●		●	
Final gear case oil - change		●						●	
Propeller shaft joint - lubricate				●				●	
Clutch fluid level - check †	month	●	●	●	●	●	●	●	
Clutch fluid - change	2 years					●			
Clutch master cylinder cup and dust seal - replace	4 years								
Clutch slave cylinder piston seal - replace	4 years								
Brake hoses, connections - check †			●	●	●	●	●	●	
Brake lining or pad wear - check † #			●	●	●	●	●	●	
Brake fluid level - check †	month	●	●	●	●	●	●	●	
Brake fluid - change	2 years					●			
Brake master cylinder cup and dust seal - replace	4 years								
Caliper piston seal and dust seal - replace	4 years								
Brake light switch - check †		●	●	●	●	●	●	●	
Steering - check †		●	●	●	●	●	●	●	
Steering stem bearing - lubricate	2 years					●			
Front fork oil - change	2 years					●			
Rear shock absorber oil leak - check †				●		●		●	
Front fork oil leak - check †				●		●		●	
Tire wear - check †			●	●	●	●	●	●	
Swingarm pivot - lubricate				●				●	
General lubrication - perform				●		●		●	
Nut, bolt, and fastener tightness - check †		●		●		●		●	

: Service more frequently when operating in severe conditions; dusty, wet, muddy, high speed, or frequent starting / stopping.
* : For higher odometer readings, repeat at the frequency interval established here.
† : Replace, add, adjust, clean, or torque if necessary.
(CA): California vehicle only

Technical Information – K-TRIC (Kawasaki Throttle Responsive Ignition Control)

In a conventional digital ignition system, the IC igniter changes ignition timing according to engine rpm only, however, K-TRIC controls the ignition timing not only according to engine rpm, but also according to throttle opening. A throttle sensor [A] is electrically linked to the IC igniter that varies the ignition timing for greater combustion efficiency: good acceleration capability and fuel consumption.



The throttle sensor is located on the carburetor throttle shaft end, and senses throttle opening. This sensor is a rotating type variable resistor that changes voltage according to throttle opening. The IC igniter senses this voltage change and determines ignition timing not only according to engine rpm, but also according to throttle opening.

Ground Terminal [A]
Output Terminal [B]
Voltage Terminal [C]

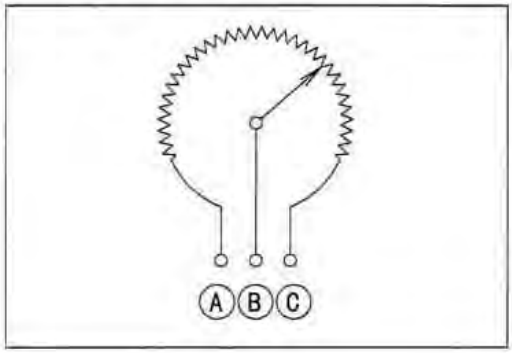

The IC igniter digitally memorizes three dimensional ignition timing map, which is determined by test beforehand for good performance, and when the engine is running, the igniter provides best ignition timing according to the engine rpm and the throttle opening from low speed to 1/4 or 1/3 of full-opened throttle.

Idling [A]
Full-opened Throttle [B]

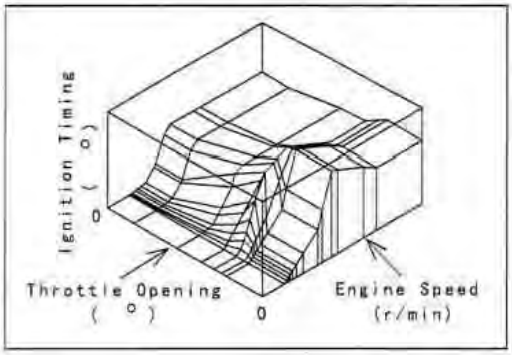

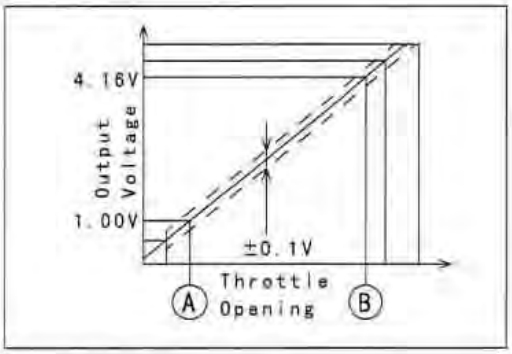

Adding to the conventional functions, such as dwell control, anti-theft, and over rev protection, the igniter has a fail safe function. In case of throttle sensor trouble like wiring short or open, ordinary igntion timing does not work well, and in the worst case the engine could damage. The igniter senses this trouble and locks ignition timing into the ignition timing at full throttle open position to prevent engine damage.

Technical Information – KAWASAKI LOW EXHAUST EMISSION for VN1500H/G1A (CA)

1. Exhaust Purification System

The burned gas, which goes out from the combustion chamber, is injected with secondary air (adding necessary oxygen), and is cleaned up while passing through two small catalytic converters and then goes out to the atmosphere.

1) Secondary Air Injection System

In order to oxidize CO, and HC by the catalysts, the proper amount of oxygen is necessary. As original combustion gas has little remaining oxygen, air is injected in the exhaust ports by the secondary air injection system in order to supply enough oxygen to the combustion gas to purify CO, and HC to a certain extent as well as prepare for activation of the catalysts. As the carburetor is set at richer level [A], and air/fuel mixture (A/F) is about 11 ~ 14, NOx is at lower level from the beginning as shown in the figure. And, A/F becomes lean (about 13.5 ~ 15) after the combustion chambers owing to secondary air injection and combustion.

Exhaust Gas before Purification

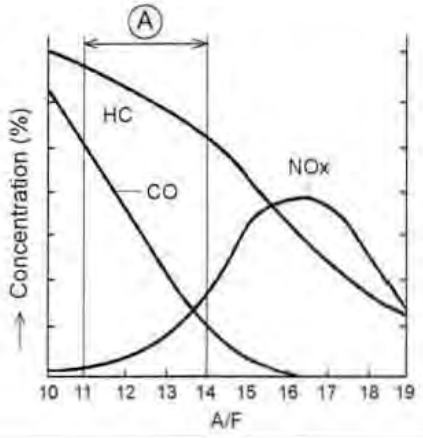

2) Catalytic Converters [A]

A converter is made of a punched metal pipe of stainless steel [C], and its surface is covered with alumina [D] upon which platinum and rhodium [E] as catalysts are applied. Generally, the temperature of the exhaust gas must be higher than the activation temperature, so the converters are installed in the premuffler chamber [B] where the temperature of exhaust gas is still high. And, the converters will be activated even under low load conditions.

After the exhaust gas is diluted with the secondary air injection system, the catalytic converters work efficiently to reduce CO, HC, and NOx. Accordingly, we can keep it within regulation.

Catalytic Converter

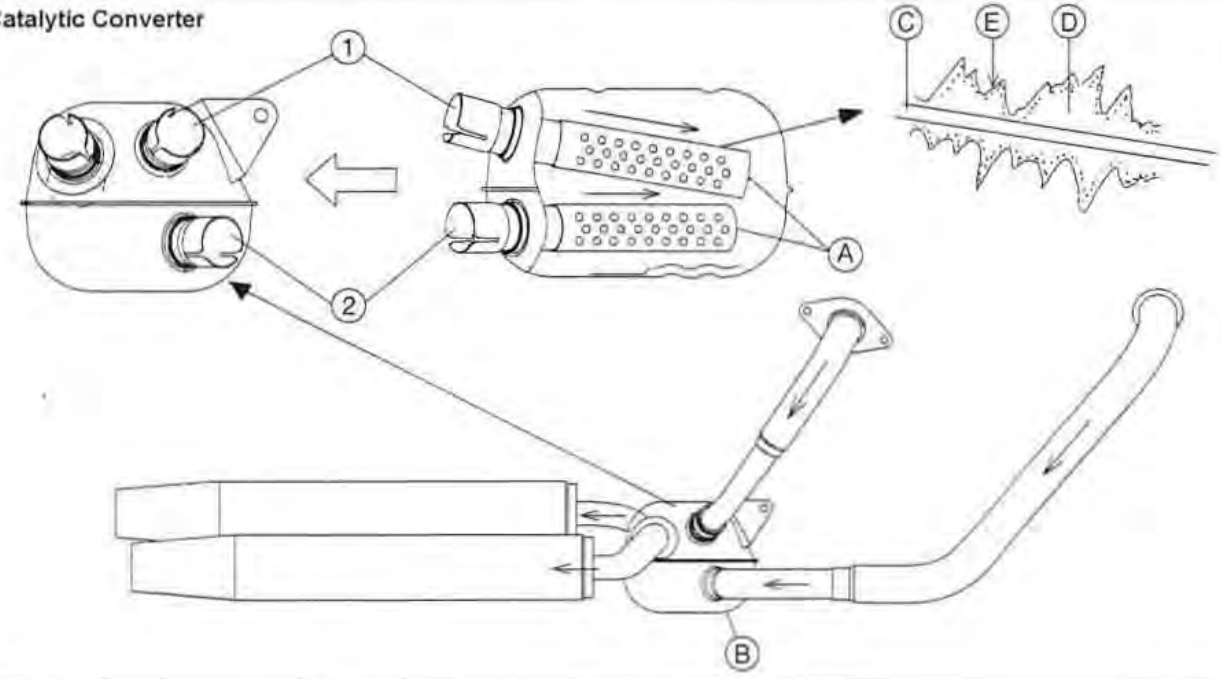

Technical Information – KAWASAKI LOW EXHAUST EMISSION for VN1500H/G1A (CA)

2. Maintenance

Special maintenance is not necessary except for the inspection of the air suction valve (which has been described in this Service Manual).

1) Replacement of Premuffler Chamber

It is impossible to replace only the catalytic converters because they are welded in the chamber. So, in the following case, the replacement of the premuffler chamber is also necessary.

In case of using not-appointed fuel (leaded gasoline, etc.):

Purification efficiency decreases in a very short period because lead poisons the catalytic converters. Although the appearance of the converter and engine performance are not effected, the replacement of the premuffler chamber is necessary to secure the purification efficiency of exhaust gas.

In case catalytic converters melt down by overheating:

Especially in the case that a lot of unburned gasoline flows into the catalytic converters under the extreme running condition far beyond common sense, there is a possibility that the catalysts overreact and that catalytic converters overheat severely. If they melt down, it causes poor engine performance, deterioration of emission noise level and purification efficiency. So, the premuffler chamber must be replaced.

2) Durability

It has the same durability as a conventional premuffler chamber.

3) Disposal to Waste

As any harmful toxic substance is not used especially, it can be disposed as usual industrial wastes. The body of the chamber is made of steel. The catalytic converter is made of stainless steel which has alumina on its surface, and the main ingredients of catalysts are platinum and rhodium.

3. Handling Precautions

1) Use only unleaded gasoline
   Usage of leaded gasoline is prohibited completely. Only fuel and additives which are specified in the Owner's Manual can be used.
2) Use specified engine oil which is described in the Owner's Manual
   In case of some ingredients which give bad effects to the catalysts (such as phosphorus "P", lead "Pb", sulfur "S") are included, the purification efficiency decreases.
3) Coasting (such as cranking while going down a slope) is prohibited with the ignition system OFF.
   The engine running without igniting causes a great flow of unburned gasoline and the decreasing of purification efficiency, and melting down of catalysts at the activation temperature or higher.

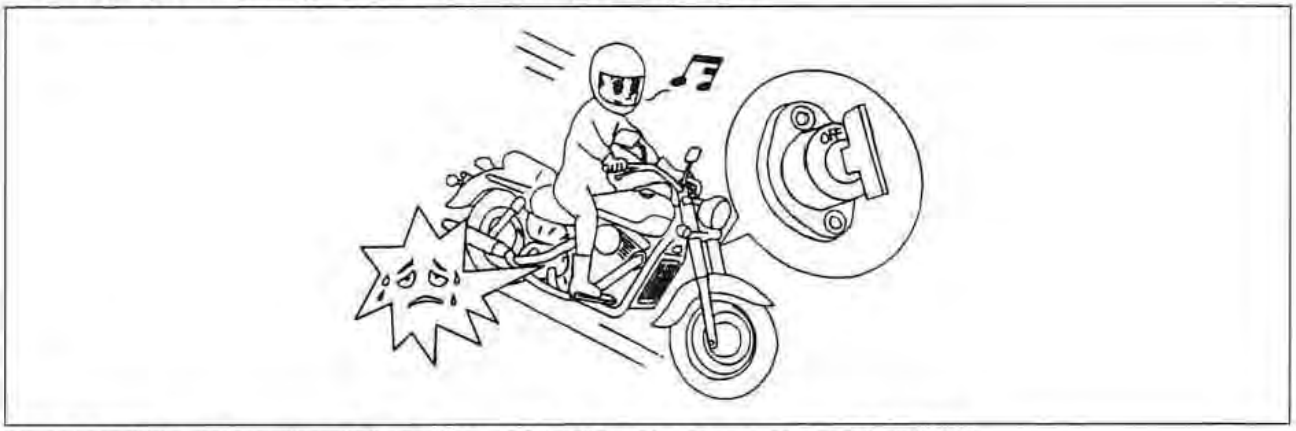

Do not coast the motorcycle with the ignition switch [A] nor the engine stop switch [B] OFF.
Do not run the engine nor coast the motorcycle under the misfire which occurs by defects such as a bad connection with the spark plug at the secondary wiring [D] of the ignition coil [C].
Do not run the engine nor coast the motorcycle under the condition that the primary wiring [E] of the ignition coil does not connect completely (misfire).
IC Igniter [F]

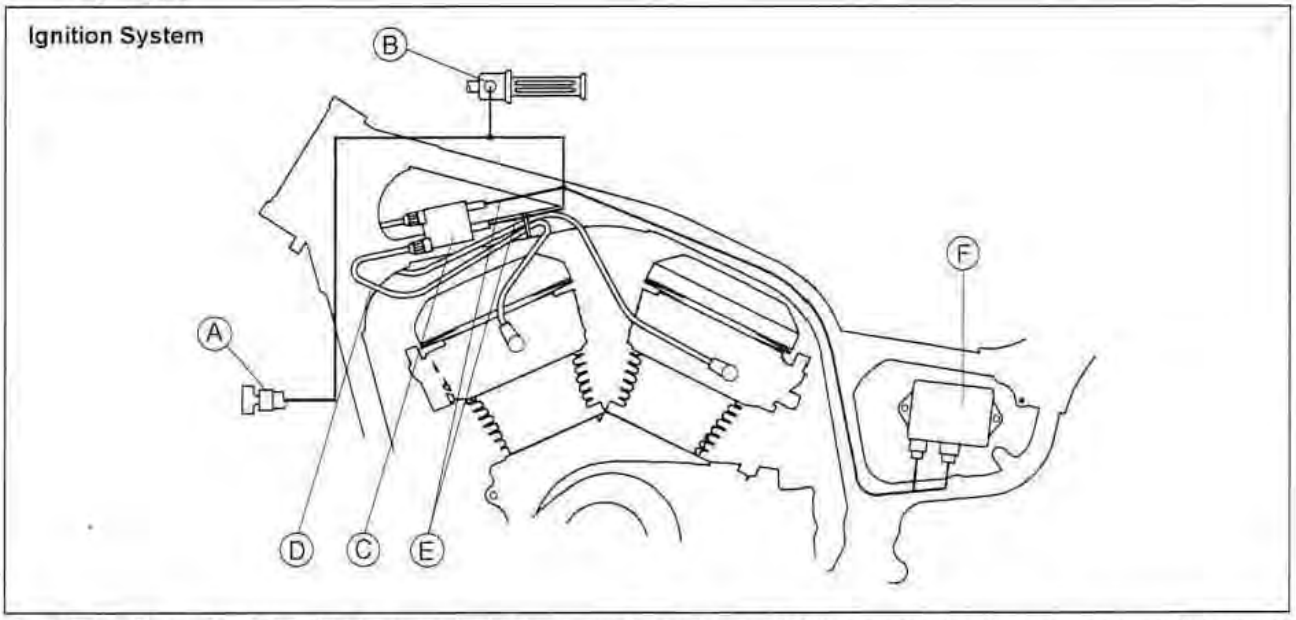

Do not run the engine even if only one cylinder has a misfire or has unstable running. In this case, request the nearest service facility to correct it. If you have no choice but running by yourself, keep engine rpm as low as possible and try to finish running at the shortest period.
When the battery is dead, do not push-start. Connect another full-charged battery with jumper cables, and start the engine.

Technical Information – KAWASAKI LOW EXHAUST EMISSION for VN1500H/G1A (CA)

4. Additional Information

1) Secondary Air Injection System

The mechanism is simple and power loss is minimum because the system uses the vacuum pressure created by exhaust pulses.

The secondary injection air helps the fuel/air mixture burn more completely (Primary air means air which flows through the inlet pipe). As the exhaust valve opens, and the burned fuel passes the exhaust valve, a stream of fresh air is introduced through the air suction valve. This fresh air burns the unburned gas and converts the carbon monoxide (CO) and hydrocarbons (HC) into harmless carbon dioxide (CO_2) and water (H_2O).

$CO + 1/2\ O_2 \rightarrow CO_2$

$HC + O_2 \rightarrow CO_2 + H_2O$

The secondary air injection system consists of a vacuum switch valve, and two air suction valves. Without using an air pump, the air suction valve can draw fresh air into the exhaust passage near the exhaust valves by vacuum that exhaust pulses generate.

Air Suction Valves

The air suction valves is a check valve which allows fresh air to flow only from the air cleaner via air hoses into the exhaust port and prevents return flow. Remove and inspect the air suction valves periodically (see Engine Top End chapter in this Service Manual). Also, remove and inspect the air suction valves whenever the idle speed is unstable, engine power is greatly reduced, or there are abnormal engine noises.

Vacuum Switch Valve

Although the vacuum switch valve usually permits secondary air flow, it closes when a high vacuum (low pressure) is developed at the inlet pipe during engine braking. This is to shut off secondary air flow and prevent explosions in the exhaust ports which might be caused by extra unburned fuel in the exhaust during deceleration. These explosions, or backfiring in the exhaust system could damage the air suction valves.

Regular inspection of the vacuum switch valve is not needed. If backfiring occurs frequently in the exhaust system during engine braking or if there are abnormal engine noises, check the vacuum switch valve as described in the text (see Engine Top End chapter in this Service Manual).

Secondary Air Injection System

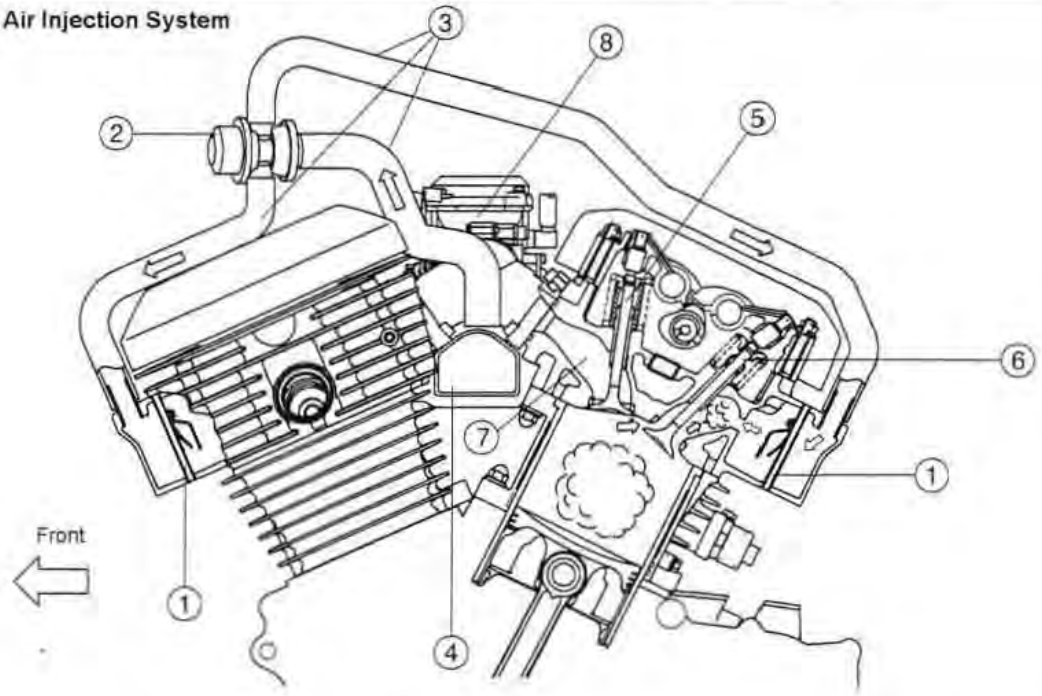

1. Air Suction Valves
2. Vacuum Switch Valve
3. Air Hoses
4. Air Cleaner Duct
5. Inlet Valve
6. Exhaust Valve
7. Inlet Pipe
8. Carburetor

2) Operation of Three-way Catalytic Converter
The three-way catalysts are used for the catalytic converters. The converters can clean up carbon monoxide (CO), hydrocarbons (HC), and nitrogen oxides (NOx) at the same time.
CO and HC are oxidized (O is added) by platinum (Pt) and converted to harmless carbon dioxide gas (CO_2) and water (H_2O), and then the exhaust gas is cleaned up:

$CO + 1/2\ O_2 \rightarrow CO_2$

$HC + O_2 \rightarrow CO_2 + H_2O$

NOx is reduced (O is removed) by rhodium (Rh) and converted to harmless nitrogen (N_2) and oxygen (O_2), and the exhaust gas is cleaned up.

$NOx \rightarrow N_2 + O_2$

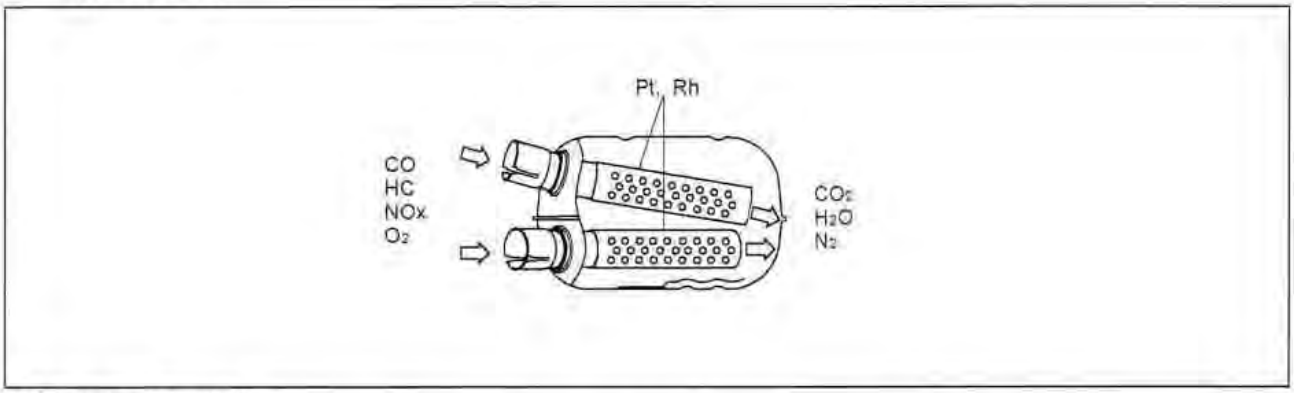

3) Property of Catalyst
Most catalysts are powders of metal or of metallic compounds, and they increase the rate of a chemical reaction. Catalysts are supposed to act in some way to loosen the bonds of the reacting substances. In other words, they lower the energy of activation, thus allowing the reaction to proceed more rapidly. To activate catalysts, the temperature of the exhaust gas must be higher than the activation temperature that is 220° ~ 230°C for new catalysts, and 270° ~ 280 °C for used catalysts (after 10000 ~ 20000 km ride).

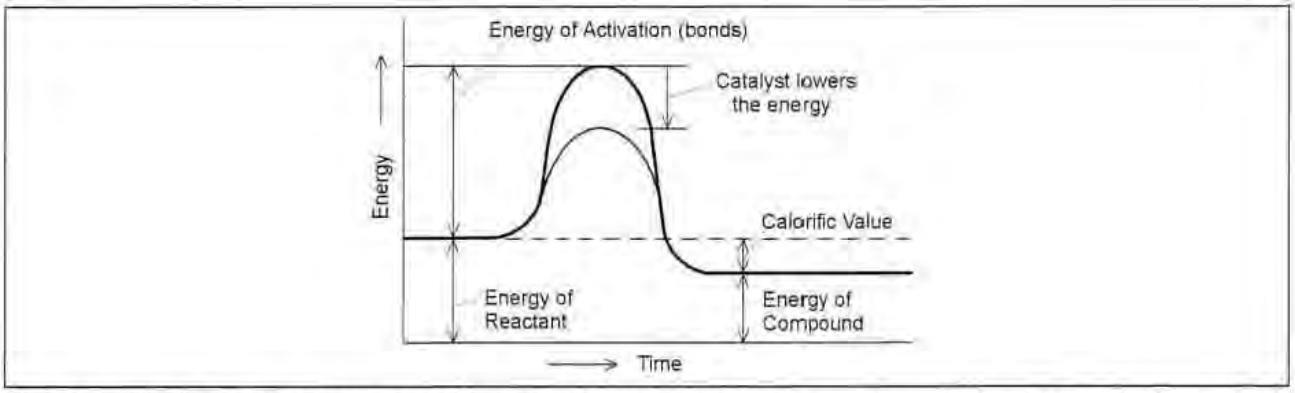

The catalyst itself undergoes no permanent chemical change, or can be recovered when the chemical reaction is completed. So, the premuffler chamber with built-in catalyst has the same durability as the conventional premuffler chamber.
The mechanism of catalytic action is supposed to be a surface phenomenon in which reactants are adsorbed onto a small portion of the surface of the catalyst. The catalytic converter is made of stainless steel and the surface is applied by alumina (aluminum oxide Al_2O_3). The alumina adheres to the stainless steel wall and the catalyst adheres to the alumina very well. The alumina surface is not uniform and there are corners, edges, dislocations, and grain boundaries. Catalyst is applied on the alumina and this makes the catalyst surface rough. The rougher the surface is, the more actively the catalyst adsorbs the reactants.
If various impurities like lead are adsorbed, they block the small portion of the catalyst surface, preventing adsorption of CO, HC, and NOx. This is the reason why leaded fuel poisons the catalyst without any break on the surface or generation of heat.
Catalysts are generally efficient in small quantities. A catalyst can catalyze the reaction of several thousand to a million times its weight in reactants. The three-way catalyst is a blend of platinum (Pt) and rhodium (Rh) which are expensive. But a converter uses only about 0.1 gram of Pt and 0.1 gram of Rh.

Technical Information – KAWASAKI LOW EXHAUST EMISSION for VN1500H/G1A (CA)

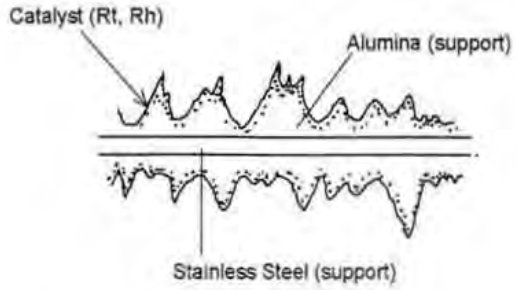

4) Recognition of Premuffler Chamber
The premuffler chamber with built-in catalyst can be distinguished, using the following marks.

Models	Premuffler Chamber with Catalyst	Premuffler Chamber without Catalyst
'98 VN1500–E1	–	KHI M045
'98 VN1500–F1	KHI M051	–
'98 VN1500–G1 '99 VN1500–G1	–	KHI M052
'98 VN1500–H1, G3	KHI M053	–

Torque and Locking Agent

The following tables list the tightening torque for the major fasteners requiring use of a non-permanent locking agent or liquid gasket.

Letters used in the "Remarks" column mean:

G: Apply grease to the threads.
EO: Apply engine oil to the threads and the seating surface.
L: Apply a non-permanent locking agent to the threads.
Lh: Left-hand threads.
O: Apply oil to the threads and seating surface.
S: Tighten the fasteners following the specified sequwnce.
SS: Apply silicone sealant.
St: Stake the fasteners to prevent loosening.
R: Replacement parts

The table below, relating tightening torque to thread diameter, lists the basic torque for the bolts and nuts. Use this table for only the bolts and nuts which do not require a specific torque value. All of the values are for use with dry solvent-cleaned threads.

Basic Torque for General Fasteners

Threads dia. (mm)	Torque		
	N·m	kg·m	ft·lb
5	3.4 ~ 4.9	0.35 ~ 0.50	30 ~ 43 in·lb
6	5.9 ~ 7.8	0.60 ~ 0.80	52 ~ 69 in·lb
8	14 ~19	1.4 ~1.9	10.0 ~ 13.5
10	25 ~ 34	2.6 ~ 3.5	19.0 ~ 25
12	44 ~ 61	4.5 ~ 6.2	33 ~ 45
14	73 ~ 98	7.4 ~ 10.0	54 ~ 72
16	115 ~ 155	11.5 ~ 16.0	83 ~ 115
18	165 ~ 225	17.0 ~ 23.0	125 ~ 165
20	225 ~ 325	23 ~ 33	165 ~ 240

Fastener		Torque			Remarks
		N·m	kg·m	ft·lb	
Fuel System:					
Inlet Manifold Bolts		12	1.2	104 in·lb	
Fuel Tap Plate Screws		0.8	0.08	7 in·lb	
Air Cleaner Duct Holder Bolts		9.8	1.0	87 in·lb	
Air Cleaner Base Bolts		9.8	1.0	87 in·lb	
Air Cleaner Base Screws		2.2	0.22	19 in·lb	
Left Air Cleaner Duct Tapping Screws		2.2	0.22	19 in·lb	
Air Cleaner Cover Screws		6.9	0.70	61 in·lb	
Surge Tank Screw		6.9	0.70	61 in·lb	
Cooling System:					
Radiator Hose Clamp Screws		2.5	0.25	22 in·lb	
Coolant Air Bleeder Bolt		7.8	0.80	69 in·lb	
Radiator Fan Switch		18	1.8	13.0	
Water Temperature Switch		7.8	0.80	69 in·lb	SS
Water Pump Impeller Bolt		9.8	1.0	87 in·lb	Lh
Water Pump Cover Bolts		9.8	1.0	87 in·lb	
Water Pipe Bolts		9.8	1.0	87 in·lb	
Radiator Drain Bolt		7.4	0.75	65 in·lb	
Engine Top End:					
Spark Plugs		18	1.8	13.0	
Spark Plug Retainer		12	1.2	104 in·lb	
Air Suction Valve Cover Bolts		7.4	0.75	65 in·lb	
Chain Tensioner Mounting Bolts		9.8	1.0	87 in·lb	S
Chain Tensioner Cap		20	2.0	14.5	S
Chain Tensioner Lockbolt		4.9	0.50	43 in·lb	S
Timing Inspection Plugs		1.5	0.15	13 in·lb	
Rotor Bolt Plugs		1.5	0.15	13 in·lb	
Camshaft Sprocket Bolts		15	1.5	11.0	L
Oil Hose Flange Bolts		9.8	1.0	87 in·lb	
Rocker Shafts		25	2.5	18.0	
Rocker Case Nuts	12 mm	78	8.0	58	EO, S
	8 mm	25	2.5	18.0	S
Rocker Case Bolts	6 mm	8.8	0.90	78 in·lb	S
Cylinder Head Nuts		25	2.5	18.0	S
Rocker Case Cover Bolts		8.8	0.90	78 in·lb	S
Camshaft Chain Guide Bolts		9.8	1.0	87 in·lb	L
Cylinder Nuts		25	2.5	18.0	S
Inlet Manifold Bolts		12	1.2	104 in·lb	S

Torque and Locking Agent

Fastener		Torque N·m	Torque kg·m	Torque ft·lb	Remarks
Exhaust Pipe Cover Clamp Screws		6.9	0.70	61 in·lb	
Clutch:					
Clutch Lever Pivot Bolt		1.0	0.10	9 in·lb	
Clutch Lever Pivot Bolt Locknut		5.9	0.60	52 in·lb	
Clutch Reservoir Cap Screws		1.5	0.15	13 in·lb	
Clutch Slave Cylinder Bleed Valve		7.8	0.80	69 in·lb	
Clutch Slave Cylinder Bolts		–	–	–	L
Clutch Hose Banjo Bolts		25	2.5	18.0	
Clutch Master Cylinder Clamp Bolts		9.8	1.0	87 in·lb	S
Starter Lockout Switch Screws		1.2	0.12	10 in·lb	
Push Rod Guide Bolts		9.8	1.0	87 in·lb	L
Clutch Cover Bolts		9.8	1.0	87 in·lb	
Clutch Cover Damper Bolts (outside)		9.8	1.0	87 in·lb	L
Clutch Cover Damper Bolts (inside)		9.8	1.0	87 in·lb	EO (tip)
Clutch Cover Damper Screws		4.9	0.50	43 in·lb	L
Clutch Hub Nut		145	15.0	110	EO
Engine Lubrication System:					
Oil Filler Plug		1.5	0.15	13 in·lb	
Oil Screen Plug		20	2.0	14.5	
Engine Oil Drain Plug		20	2.0	14.5	
Oil Filter (Cartridge type)		18	1.8	13.0	R, O
Oil Filter Bolt		25	2.5	18.0	SS
Oil Pressure Relief Valve		15	1.5	11.0	L
Oil Pressure Switch Terminal Bolt		1.5	0.15	13 in·lb	
Oil Pressure Switch		15	1.5	11.0	SS
Oil Pump Mounting Bolts		9.8	1.0	87 in·lb	
Oil Hose Banjo Bolts		9.8	1.0	87 in·lb	
Oil Hose Flange Bolt (outside)		9.8	1.0	87 in·lb	
Oil Pipe Hoder Bolts (inside)		8.8	0.90	78 in·lb	L
Oil Pipe Clamp Bolts (iniside)		9.8	1.0	87 in·lb	L
Crankcase Oil Nozzle		3.4	0.35	30 in·lb	
Engine Removal/Installation:					
Downtube Bolts		44	4.5	33	
Engine Mounting Bolts and Nuts		44	4.5	33	
Engine Mounting Bracket Bolts		23	2.3	16.5	
Engine Ground Terminal Bolt		7.8	0.80	69 in·lb	
Crankshaft/Transmission:					
Crankcase Bolts	10 mm	39	4.0	29	S
	8 mm	21	2.1	15.0	S
	6 mm	9.8	1.0	87 in·lb	S
Crankcase Bearing Retainer Bolts		9.8	1.0	87 in·lb	L
Camshaft Chain Guide Bolts		9.8	1.0	87 in·lb	L
Crankcase Oil Nozzles		3.4	0.35	30 in·lb	
Connecting Rod Big End Nuts		59	6.0	43	EO
Oil Pressure Relief Valve		15	1.5	11.0	L
Oil Hose Banjo Bolts		9.8	1.0	87 in·lb	
Primary Gear Bolt		145	15.0	110	EO
Water Pump Chain Guide Spring Hook Bolt		2.9	0.30	26 in·lb	
Water Pump Chain Guide Bolt		7.8	0.80	69 in·lb	
Idle Shaft Holder Bolts		7.8	0.80	69 in·lb	
Oil Pressure Switch Terminal Bolt		1.5	0.15	13 in·lb	
Oil Pressure Switch		15	1.5	11.0	SS
Oil Pipe Clamp Bolts (inside)		9.8	1.0	87 in·lb	L
Left Balancer Gear Bolt		85	8.7	63	EO
Starter Clutch Bolt		85	8.7	63	EO
Starter Clutch Coupling Bolts		15	1.5	11.0	L
Gear Set Lever Bolt		9.8	1.0	87 in·lb	

Torque and Locking Agent

Fastener		Torque			Remarks
		N·m	kg·m	ft·lb	
Shift Shaft Return Spring Pin (Bolt)		20	2.0	14.5	L
Front Shift Pedal Clamp Bolts		12	1.2	104 in·lb	
Rear Shift Pedal Clamp Bolt		12	1.2	104 in·lb	
Shift Lever Clamp Bolts		9.8	1.0	87 in·lb	
Shift Rod Locknuts		9.8	1.0	87 in·lb	(Rear: Lh)
Shift Drum Bearing Holder Bolts		9.8	1.0	87 in·lb	L
Shift Drum Cam Screw		–	–	–	L
Damper Cam Nut (Front Gear)		226	23.0	166	EO (threads)
Push Rod Guide Bolts		9.8	1.0	87 in·lb	L
Wheels/Tires:					
Front Axle Clamp Bolts		34	3.5	25	S
Front Axle Nut		110	11.0	80	S
Rear Axle Nut		110	11.0	80	
Rear Tire Air Valve Nuts		1.5	0.15	13 in·lb	R
Final Drive:					
Oil Pipe Banjo Bolts (Front Gear)		12	1.2	104 in·lb	
Oil Nozzle (Front Gear)		2.9	0.30	26 in·lb	
Oil Plug (Front Gear)		18	1.8	13.0	
Neutral Switch		15	1.5	11.0	
Front Gear Case Bolts:	6 mm	9.8	1.0	87 in·lb	
	8 mm	25	2.5	18.0	
Damper Cam Nut (Front Gear)		226	23.0	166	EO (threads)
Drive Gear Nut (Front Gear)		265	27.0	195	EO, St
Driven Gear Assy Mounting Bolts		25	2.5	18.0	
Driven Gear Bolt (Front Gear)		135	14.0	100	EO, St
Bearing Retainer Bolts (Front Gear)		8.8	0.90	78 in·lb	
Final Gear Case Drain Plug		8.8	0.90	78 in·lb	
Final Gear Case Mounting Nuts		34	3.5	25	
Final Gear Case Studs		–	–	–	L
Final Gear Case Cover Bolts:	8 mm	23	2.3	16.5	
	10 mm	34	3.5	25	
Pinion Gear Nut (Final Gear)		120	12.0	87	St, O
Pinion Bearing Retainer (Final Gear)		245	25.0	180	Lh
Retainer Stop Screw		16	1.6	11.5	L
Brakes:					
Caliper Bleed Valves		7.8	0.80	69 in·lb	
Brake Hose Banjo Bolts		25	2.5	18.0	
Brake Lever Pivot Bolt		1.0	0.10	9 in·lb	
Brake Lever Pivot Bolt Locknut		5.9	0.60	52 in·lb	
Front Brake Reservoir Cap Screws		1.5	0.15	13 in·lb	
Front Brake Light Switch Screws		1.2	0.12	10 in·lb	
Front Master Cylinder Clamp Bolts		9.8	1.0	87 in·lb	S
Front Caliper Mounting Bolts		34	3.5	25	
Rear Caliper Mounting Bolts		32	3.3	24	
(G2/H2 Model)		23	2.3	16.5	
Rear Caliper Holder Bolts		64	6.5	47	
Brake Disc Bolts		27	2.8	20.0	L
Rear Master Cylinder Mounting Bolts		25	2.5	18.0	
(G2/H2 Model)		34	3.5	24	
Rear Master Cylinder Push Rod Locknut		18	1.8	13.0	
Brake Pedal Clamp Bolt		23	2.3	16.5	
Supension:					
Upper Front Fork Clamp Bolts		20	2.0	14.5	
Lower Front Fork Clamp Bolts		34	3.5	25	
Front Fork Lower Cover Bolts		7.4	0.75	65 in·lb	
Front Fork Cover Screws		4.4	0.45	39 in·lb	
Front Fork Bottom Allen Bolts		20	2.0	14.5	L
Front Axle Clamp Bolts		34	3.5	25	S

Torque and Locking Agent

Fastener	Torque			Remarks
	N·m	kg·m	ft·lb	
Rear Shock Absorber Nuts	34	3.5	25	
Swingarm Pivot Shaft	125	13.0	94	G
Steering:				
Steering Stem Head Nut	88	9.0	65	
Steering Stem Nut	20	2.0	14.5	
Handlebar Clamp Bolts	34	3.5	25	S
Handle Holder Nuts	34	3.5	25	
Handlebar End Caps	–	–	–	Lh, L
Handlebar Switch Housing Screws	3.4	0.35	30 in·lb	
Upper Front Fork Clamp Bolts	20	2.0	14.5	
Lower Front Fork Clamp Bolts	34	3.5	25	
Headlight Cover Bolts ø6	7.4	0.75	65 in·lb	
Upper Fork Cover Bolts ø5	4.4	0.45	39 in·lb	
Brake Joint Bolts	7.4	0.75	65 in·lb	
Turn Signal Light Holder Bolts	7.4	0.75	65 in·lb	
Frame:				
Front Fender Bolts	6.9	0.70	61 in·lb	
Downtube Bolts	44	4.5	33	
Front Footpeg Bolts	34	3.5	25	
Rear Footpeg Bracket Bolts	20	2.0	14.5	
Sidestand Nuts	44	4.5	33	
Electrical System:				
Spark Plugs	18	1.8	13.0	
Pickup Coil Screws	2.9	0.30	26 in·lb	
Alternator Outer Cover Bolts	12	1.2	104 in·lb	
Alternator Outer Cover Damper Bolts	9.8	1.0	87 in·lb	EO (tip)
Alternator Cover Bolts	9.8	1.0	87 in·lb	
Alternator Inner Cover Bolts	9.8	1.0	87 in·lb	
Alternator Rotor Bolt	78	8.0	57	EO
Alternator Outer Stator Bolts	13	1.3	113 in·lb	L
Alternator Inner Stator Bolts	13	1.3	113 in·lb	L
Inner Stator Holder Bolts	13	1.3	113 in·lb	L
Timing Inspection Plugs	1.5	0.15	13 in·lb	
Stator Lead Clamp Screws	9.8	1.0	87 in·lb	L
Starter Motor Terminal Locknut	11	1.1	95 in·lb	
Starter Motor Terminal Nut	4.9	0.50	43 in·lb	
Starter Motor Assy Bolts	4.9	0.50	43 in·lb	
Starter Motor Mounting Bolts	9.8	1.0	87 in·lb	
Headlight Body Mounting Screws (inside)	2.9	0.30	26 in·lb	L
Headlight Rim Screws	1.0	0.10	9 in·lb	
Handlebar Switch Housing Screws	3.4	0.35	30 in·lb	
Radiator Fan Switch	18	1.8	13.0	
Water Temperature Switch	7.8	0.80	69 in·lb	SS
Oil Pressure Switch Terminal Bolt	1.5	0.15	13 in·lb	
Oil Pressure Switch	15	1.5	11.0	SS
Neutral Switch	15	1.5	11.0	
Turn Signal Light Screws	1.0	0.10	9 in·lb	
Turn Signal Light Mounting Nuts	5.9	0.60	52 in·lb	

Special Tools and Sealant

Oil Pressure Gauge, 5 kg/cm^2: 57001-125

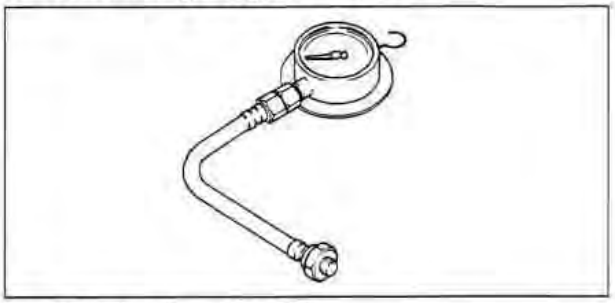

Inside Circlip Pliers: 57001-143

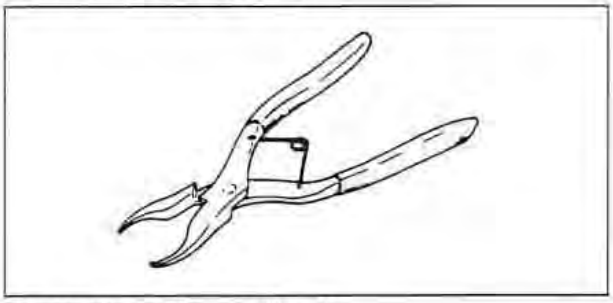

Outside Circlip Pliers: 57001-144

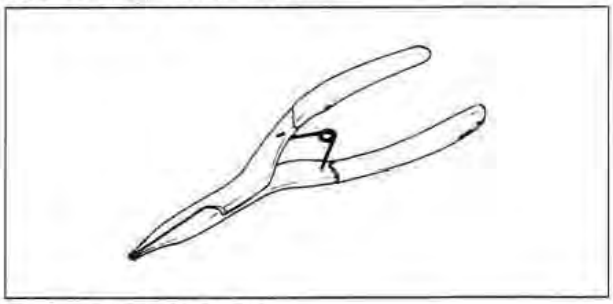

Bearing Puller: 57001-158

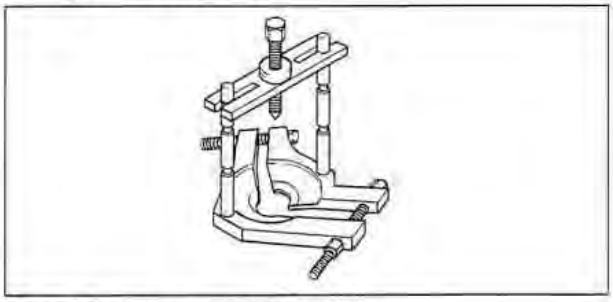

Valve Guide Reamer, ϕ7: 57001-162

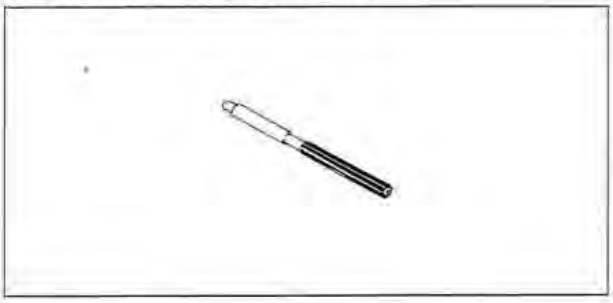

Valve Guide Arbor, ϕ7: 57001-163

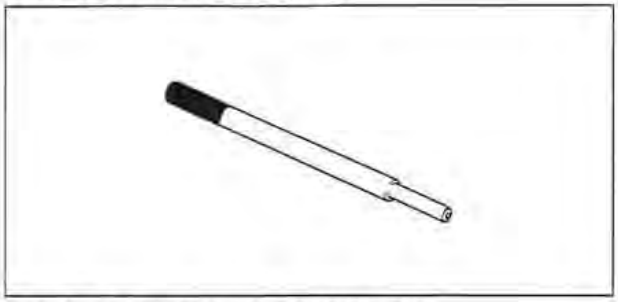

Fork Cylinder Holder Handle: 57001-183

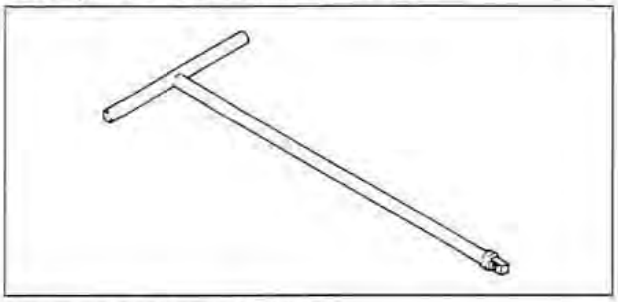

Compression Gauge: 57001-221

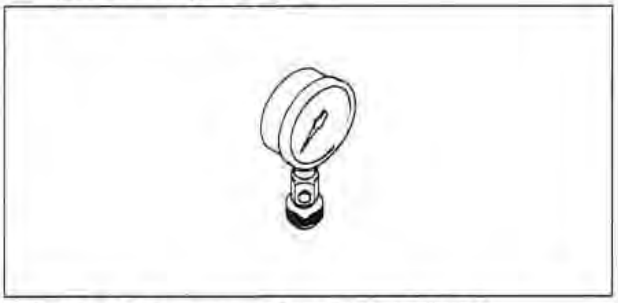

Valve Spring Compressor Assembly: 57001-241

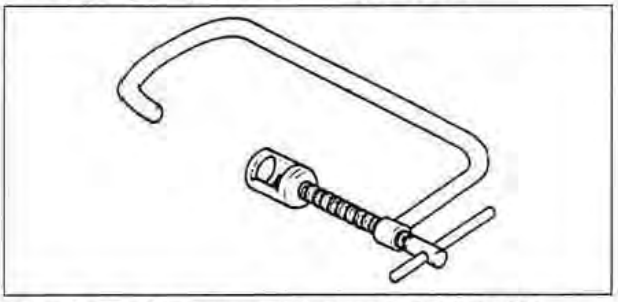

Valve Spring Compressor Adapter, ϕ28.2: 57001-243

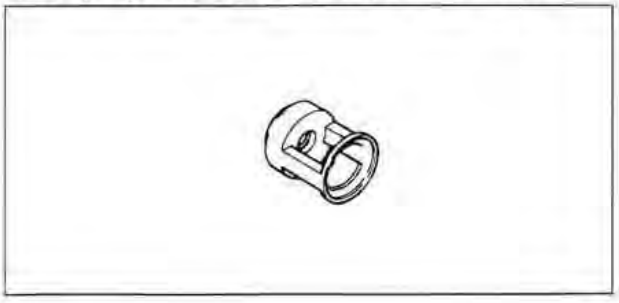

Special Tools and Sealant

Bearing Puller Adapter: 57001-317

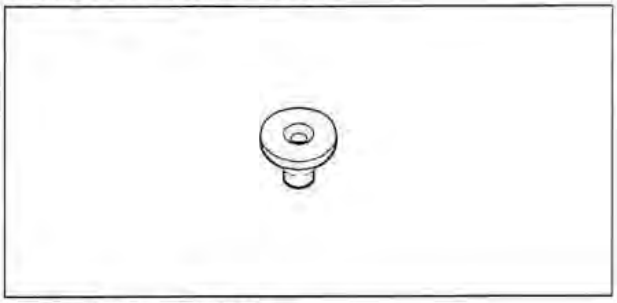

Bearing Driver: 57001-382

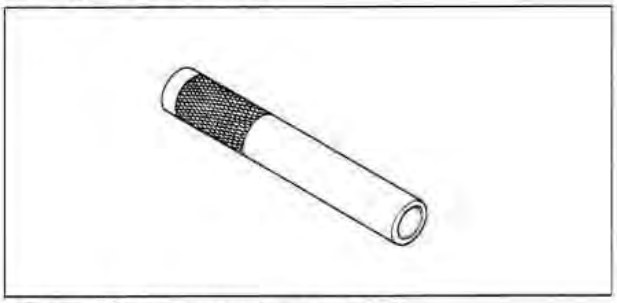

Piston Pin Puller Assembly: 57001-910

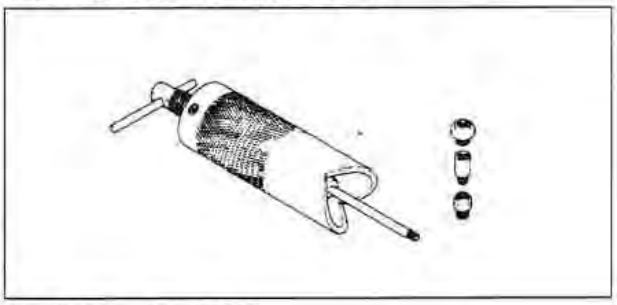

Gear Holder: 57001-1015

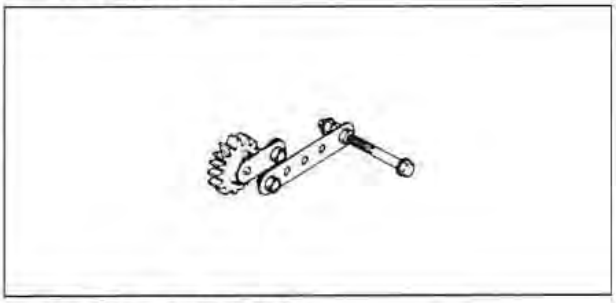

Fuel Level Gauge: 57001-1017

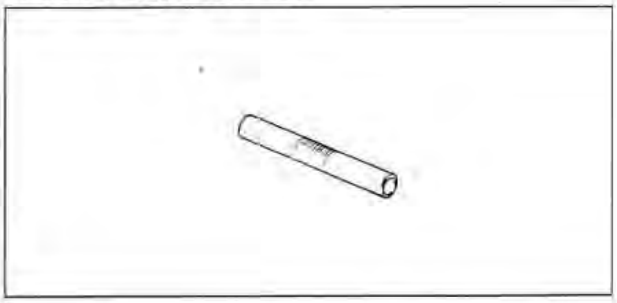

Compression Gauge Adapter, M12 × 1.25: 57001-1018

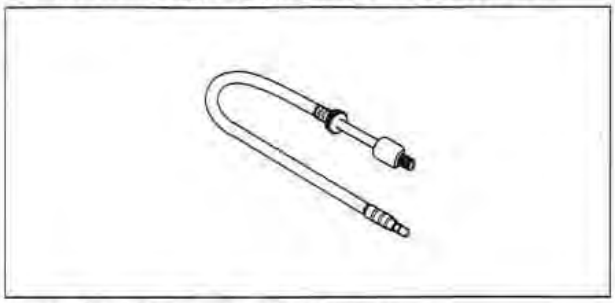

Spark Plug Wrench, Hex 18: 57001-1024

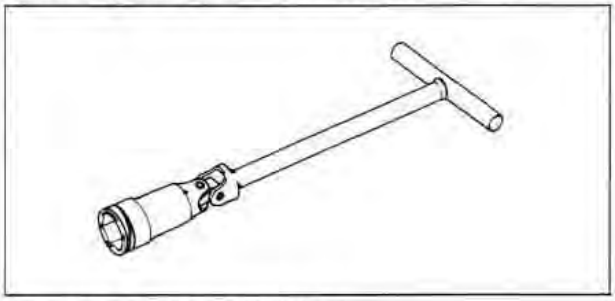

Damper Cam Holder: 57001-1025

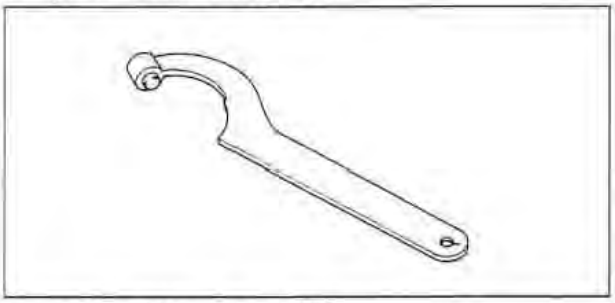

Driven Gear Holder: 57001-1027

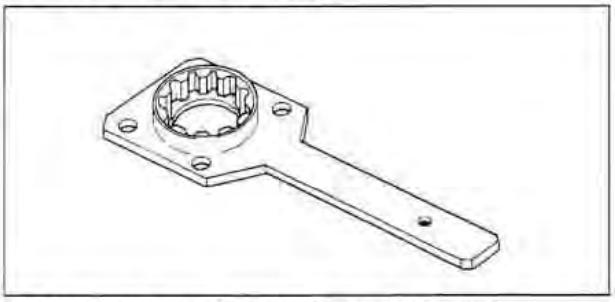

Oil Pressure Gauge Adapter, PT 1/8: 57001-1033

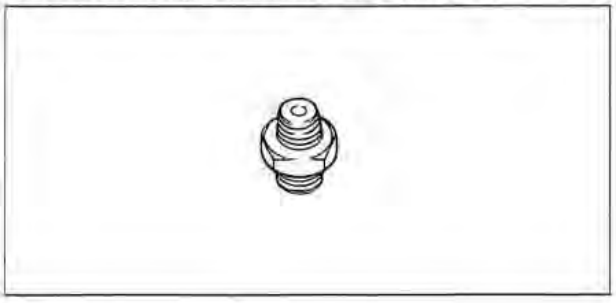

Special Tools and Sealant

Fork Cylinder Holder Adapter: 57001-1057

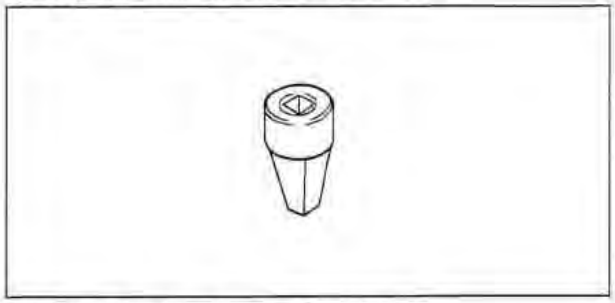

Oil Seal & Bearing Remover: 57001-1058

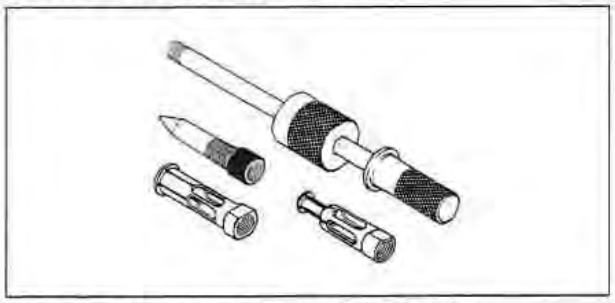

Head Pipe Outer Race Press Shaft: 57001-1075

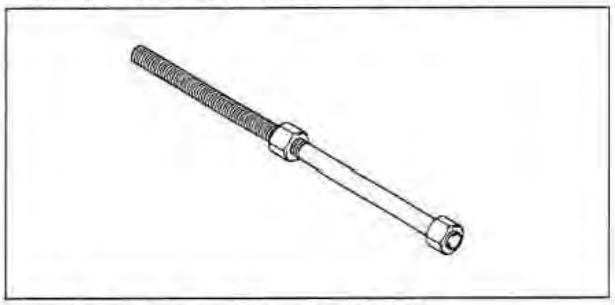

Head Pipe Outer Race Driver: 57001-1077

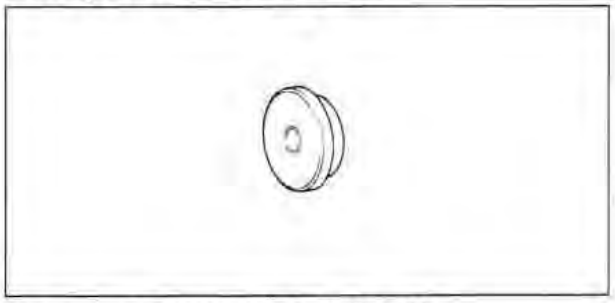

Piston Ring Compressor Grip: 57001-1095

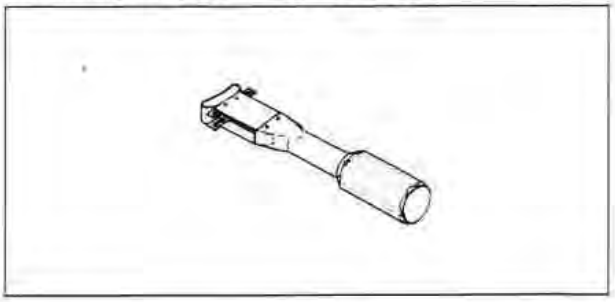

Steering Stem Nut Wrench: 57001-1100

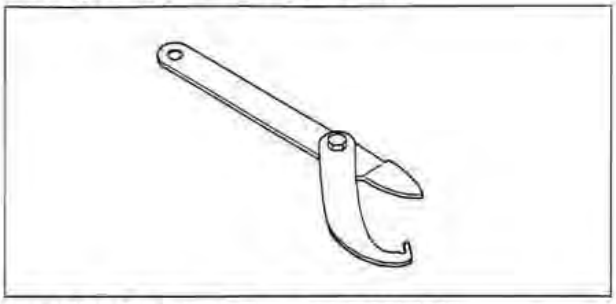

Head Pipe Outer Race Remover: 57001-1107

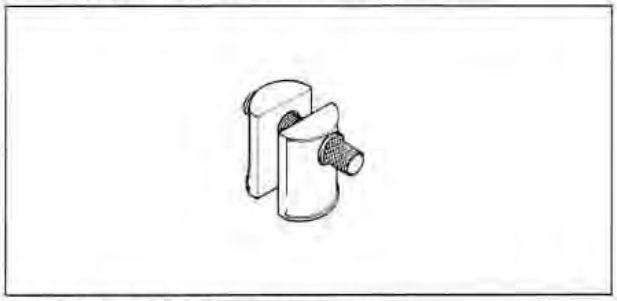

Valve Seat Cutter, 45° - φ32: 57001-1115

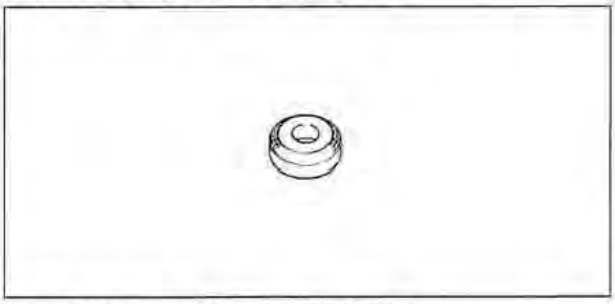

Valve Seat Cutter, 45° - φ35: 57001-1116

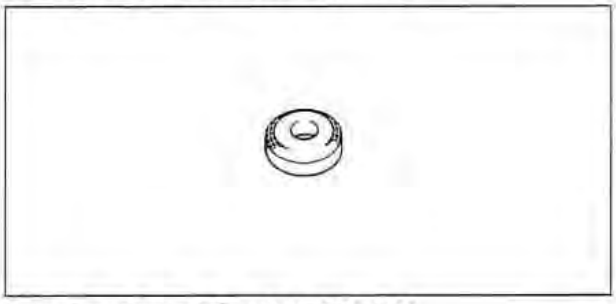

Valve Seat Cutter, 32° - φ35: 57001-1121

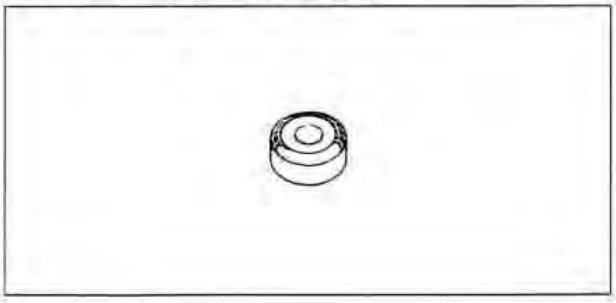

Special Tools and Sealant

Valve Seat Cutter Holder, ϕ7: 57001-1126

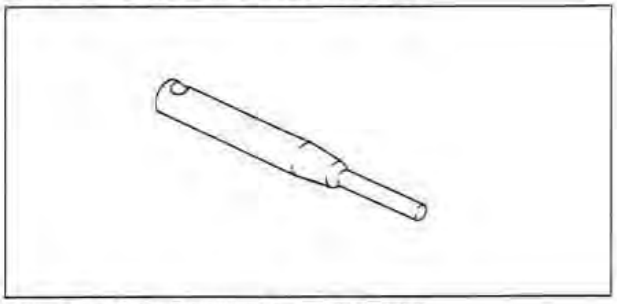

Valve Seat Cutter Holder Bar: 57001-1128

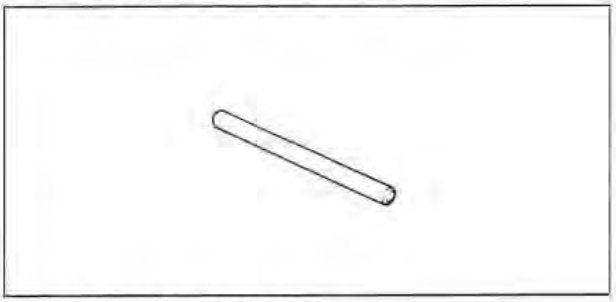

Bearing Driver Set: 57001-1129

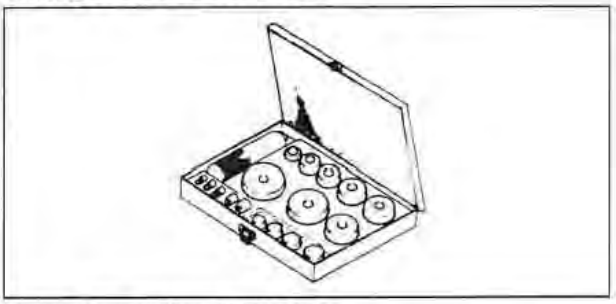

Pinion Gear Holder: 57001-1165

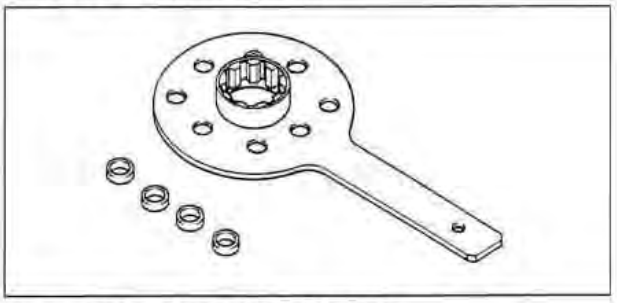

Hexagon Wrench, Hex 27: 57001-1210

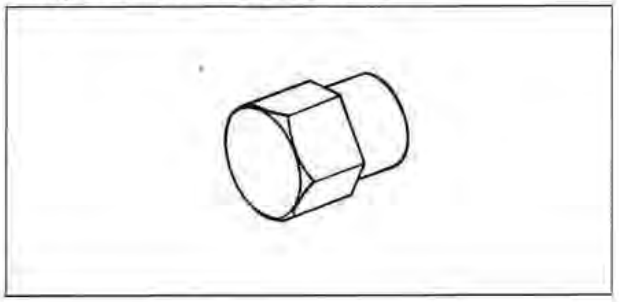

Piston Pin Puller Adapter: 57001-1211

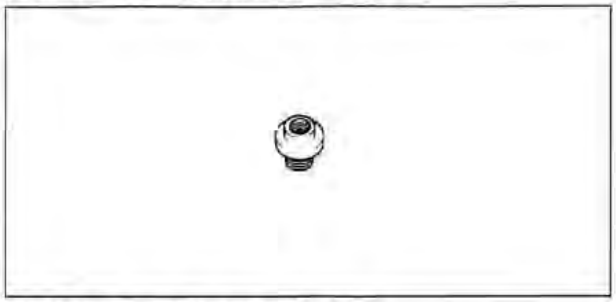

Fork Outer Tube Weight: 57001-1218

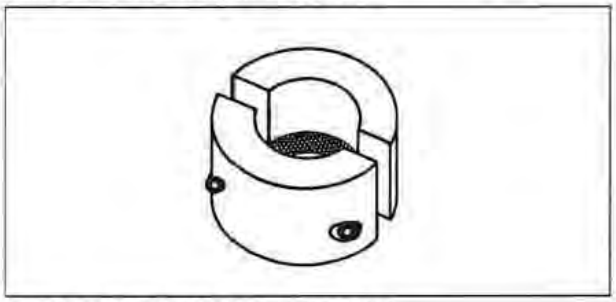

Front Fork Oil Seal Driver: 57001-1219

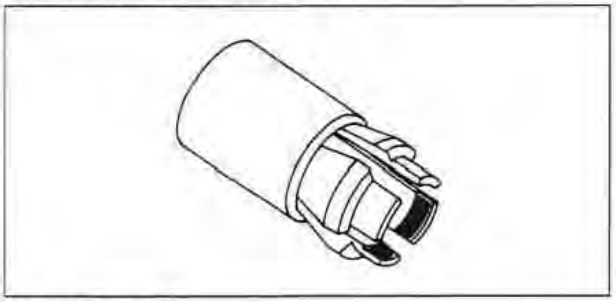

Jack: 57001-1238

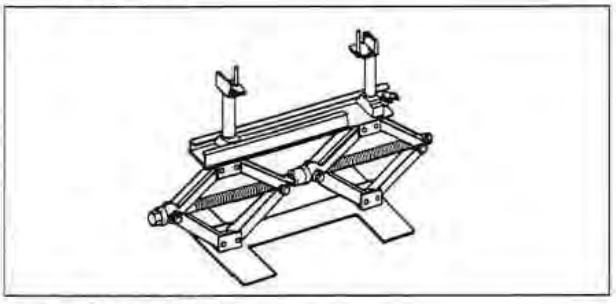

Timing Light: 57001-1241

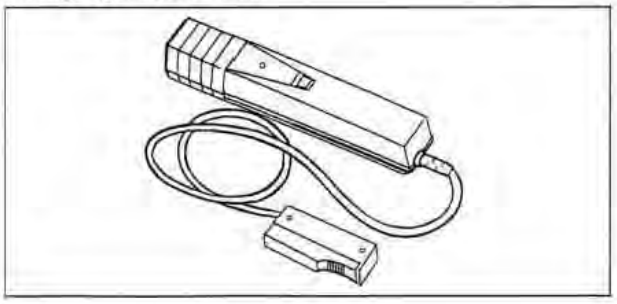

Special Tools and Sealant

Valve Seat Cutter, 55° - φ35: 57001-1247

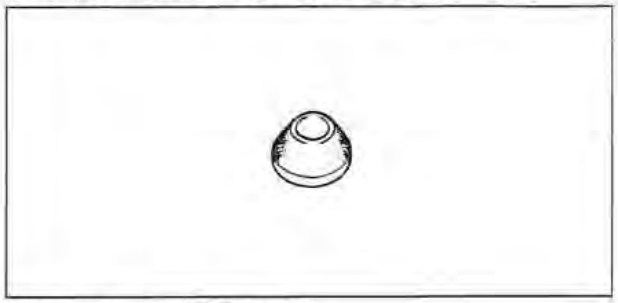

Oil Filter Wrench: 57001-1249

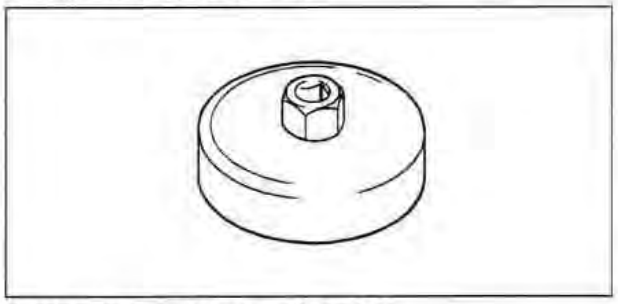

Bearing Retainer Wrench: 57001-1251

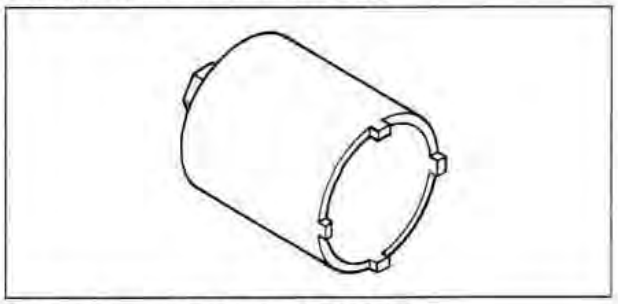

Bearing Remover Shaft, φ9: 57001-1265

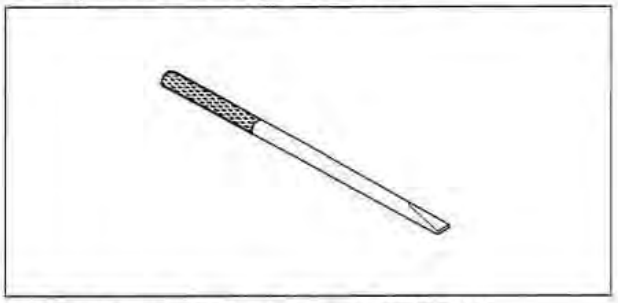

Bearing Remover Head, φ10 × φ12: 57001-1266

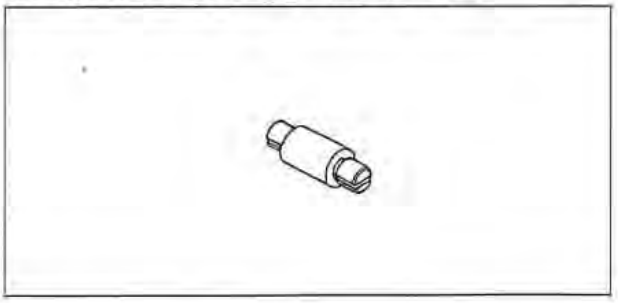

Carburetor Drain Plug Wrench, Hex 3: 57001-1269

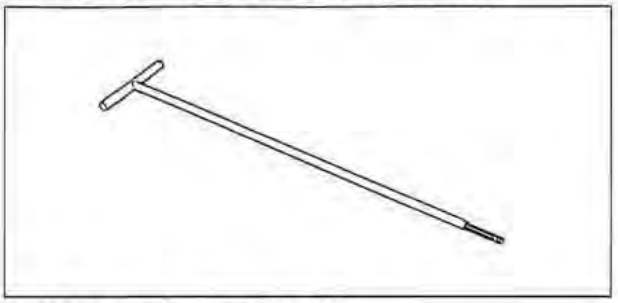

Fork Oil Level Gauge: 57001-1290

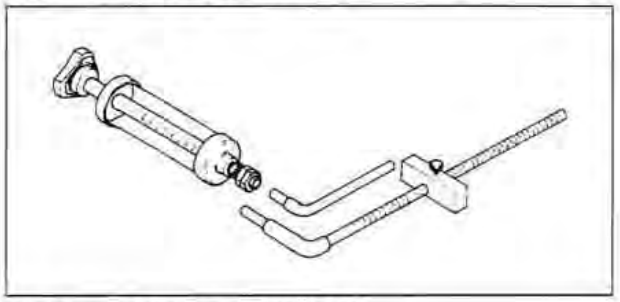

Pilot Screw Adjuster, C: 57001-1292

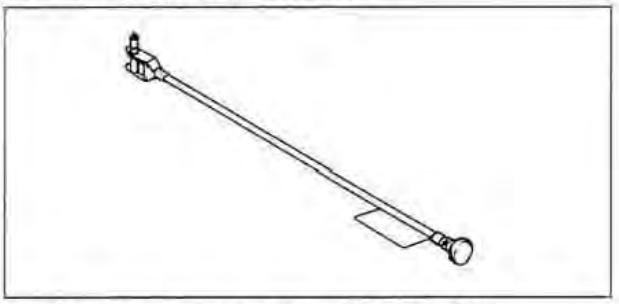

Bearing Remover Head, φ20 × φ22: 57001-1293

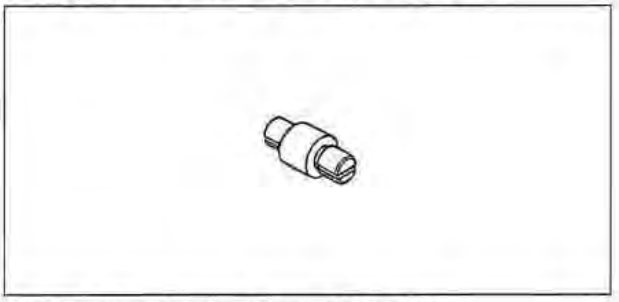

Steering Stem Bearing Driver: 57001-1344

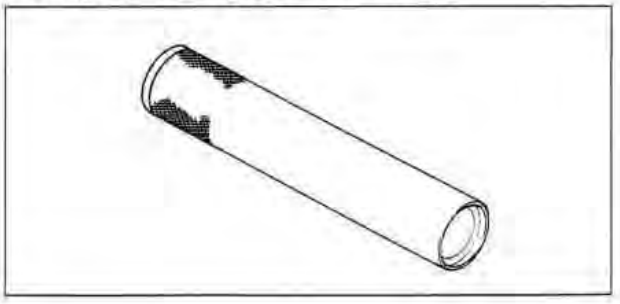

Special Tools and Sealant

Steering Stem Bearing Driver Adapter: 57001-1345

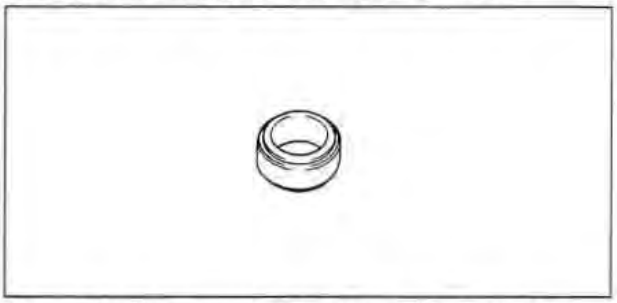

Piston Ring Compressor Belt, ϕ95 ~ ϕ108: 57001-1358

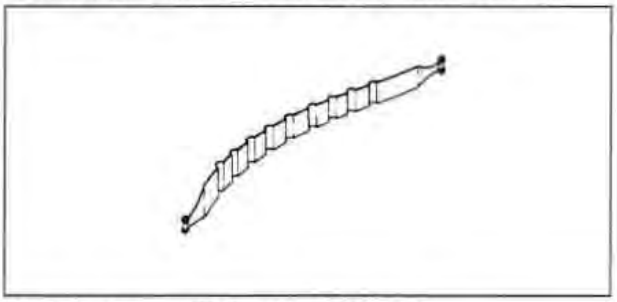

Bearing Remover Shaft, ϕ13: 57001-1377

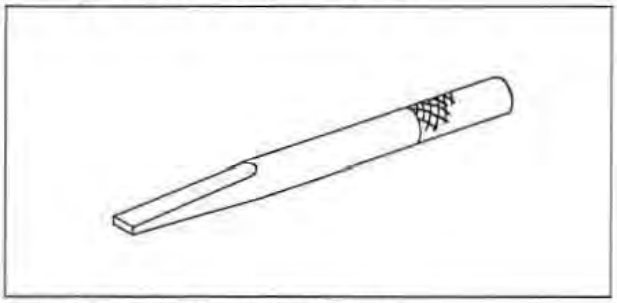

Igniter Checker Assembly: 57001-1378

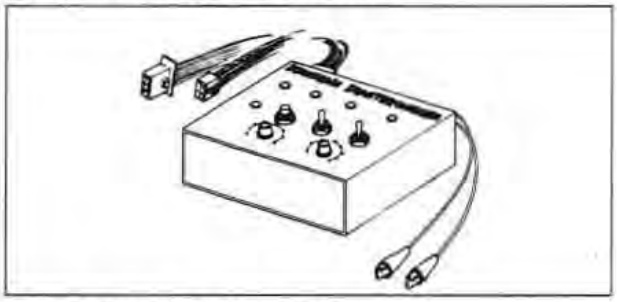

Harness Adapter #3: 57001-1383

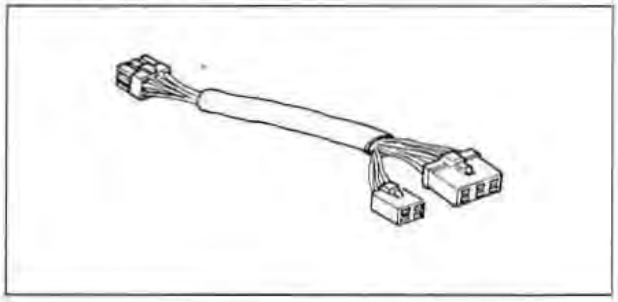

Hand Tester: 57001-1394

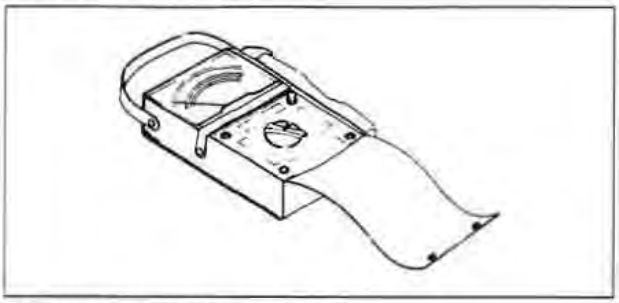

Harness Adapter #12: 57001-1397

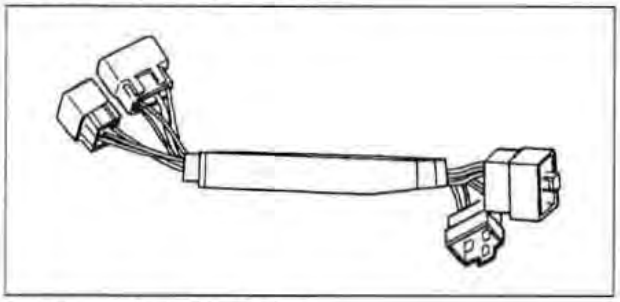

Attachment Jack: 57001-1398

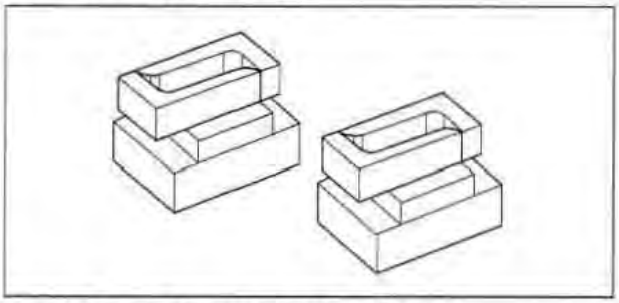

Throttle Sensor Setting Adapter: 57001-1400

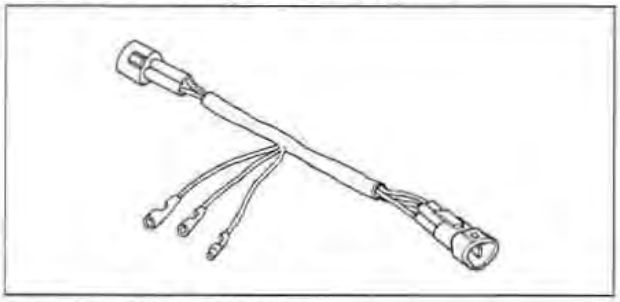

Drive Shaft Holder: 57001-1407

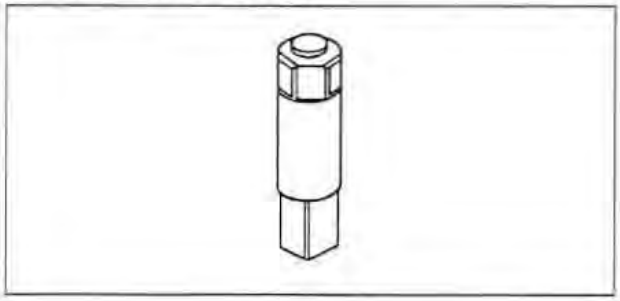

Special Tools and Sealant

Flywheel Holder: 57001-1410

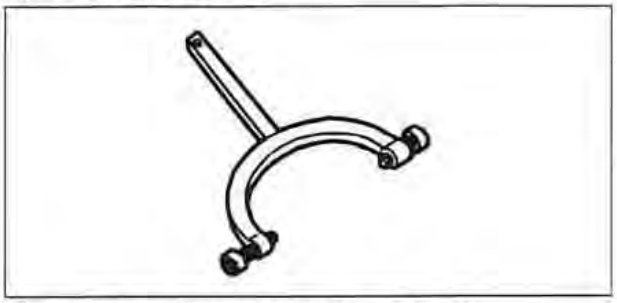

Kawasaki Bond (Liquid Gasket-Black): 92104-1003

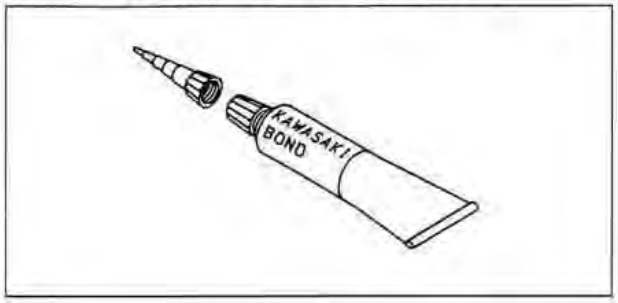

Kawasaki Bond (Silicone Sealant): 56019–120

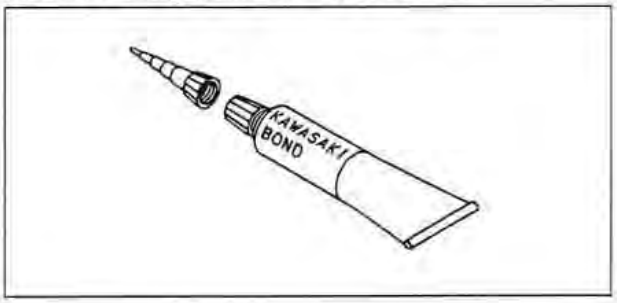

Cable, Wire, and Hose Routing

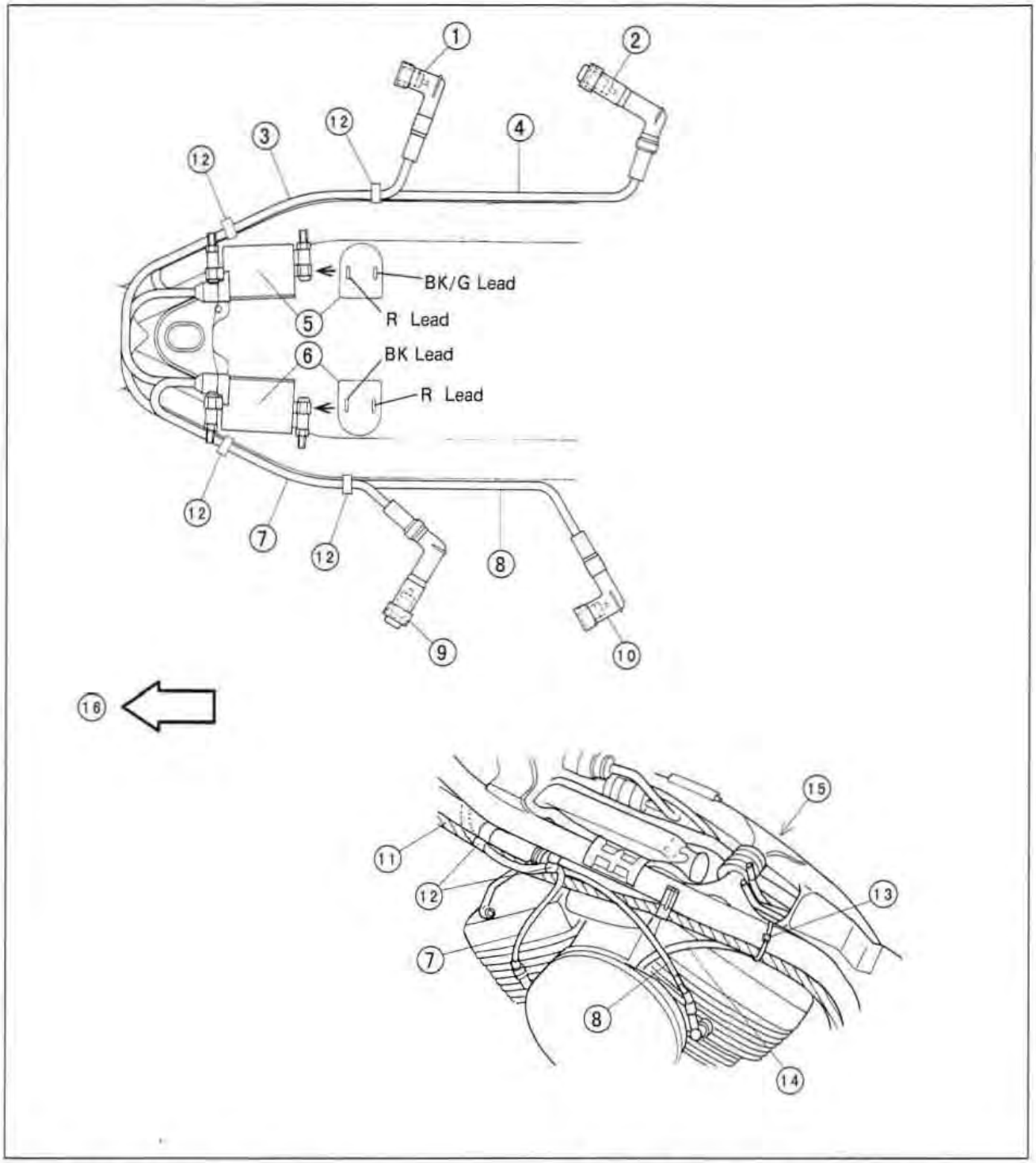

1. Front Right Spark Plug Cap
2. Rear Right Spark Plug Cap
3. Lead from the lower side of the left ignition coil
4. Lead from the lower side of the right ignition coil
5. Ignition Coil for Rear Spark Plugs
6. Ignition Coil for Front Spark Plugs
7. Lead from the upper side of the left ignition coil
8. Lead from the upper side of the right ignition coil
9. Front Left Spark Plug Cap
10. Rear Left Spark Plug Cap
11. Clutch Hose
12. Plastic Clamps
13. Strap (left side only)
14. Green Hose (California Model: CA)
15. Right and left side view are symmetrical.
16. Front

Cable, Wire, and Hose Routing

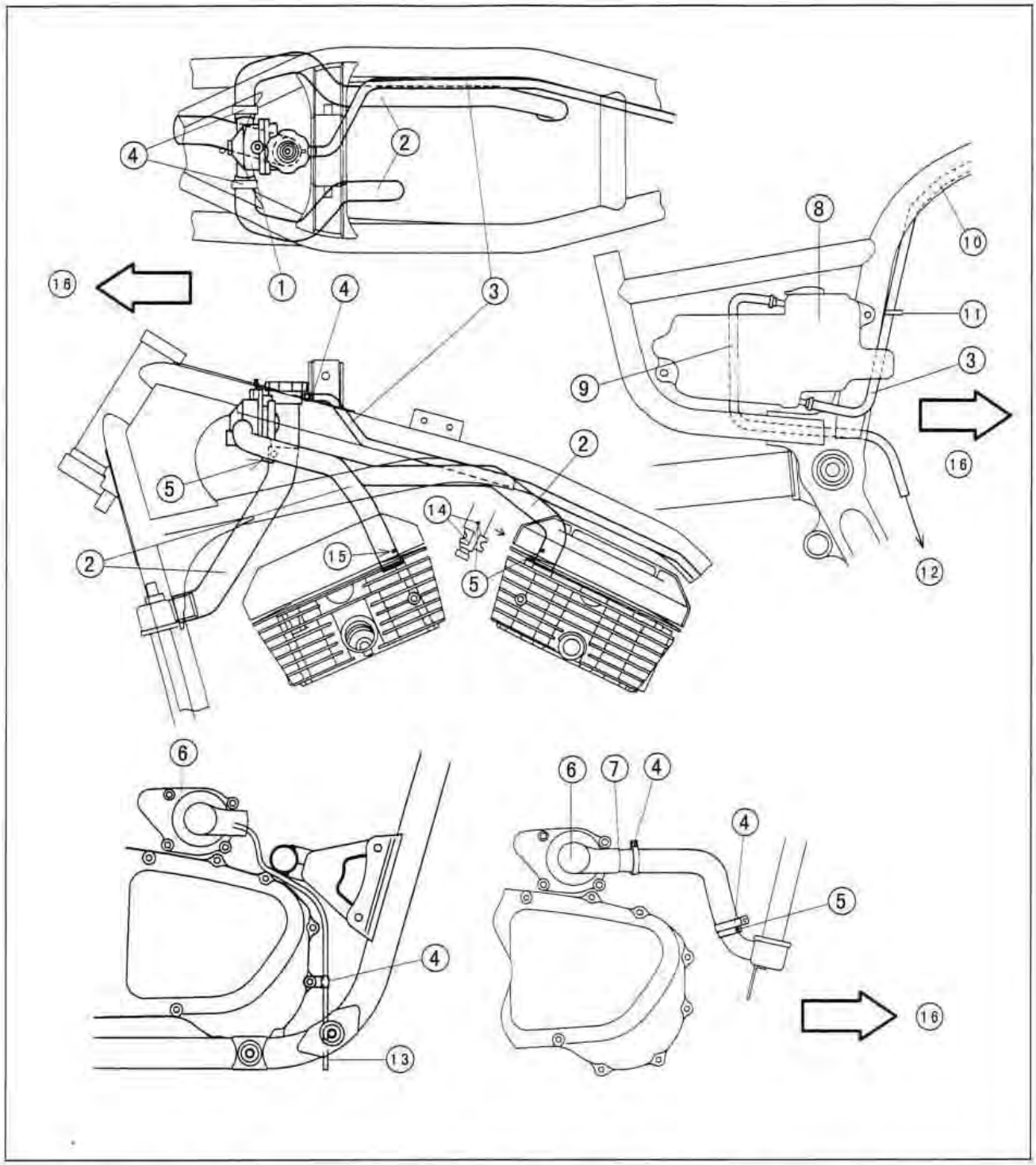

1. Thermostat Housing
2. Water Hoses
3. Reserve Tank Hose
4. Clamps
5. White marks face front.
6. Water Pump
7. Insert the hose until it touches the water outlet (A = 10 - 13 mm).
8. Reserve Tank
9. Overflow Hose: Run the hose behind the reserve tank and between the igniter and the starter relay.
10. Run the hose inside the frame.
11. Run the hose through the upper holder.
12. Insert the hose into the clamp on the rear side of the engine.
13. Water Pump Drainage Outlet Hose
14. Align the mark and clamp end.
15. White mark faces rear.
16. Front

Cable, Wire, and Hose Routing

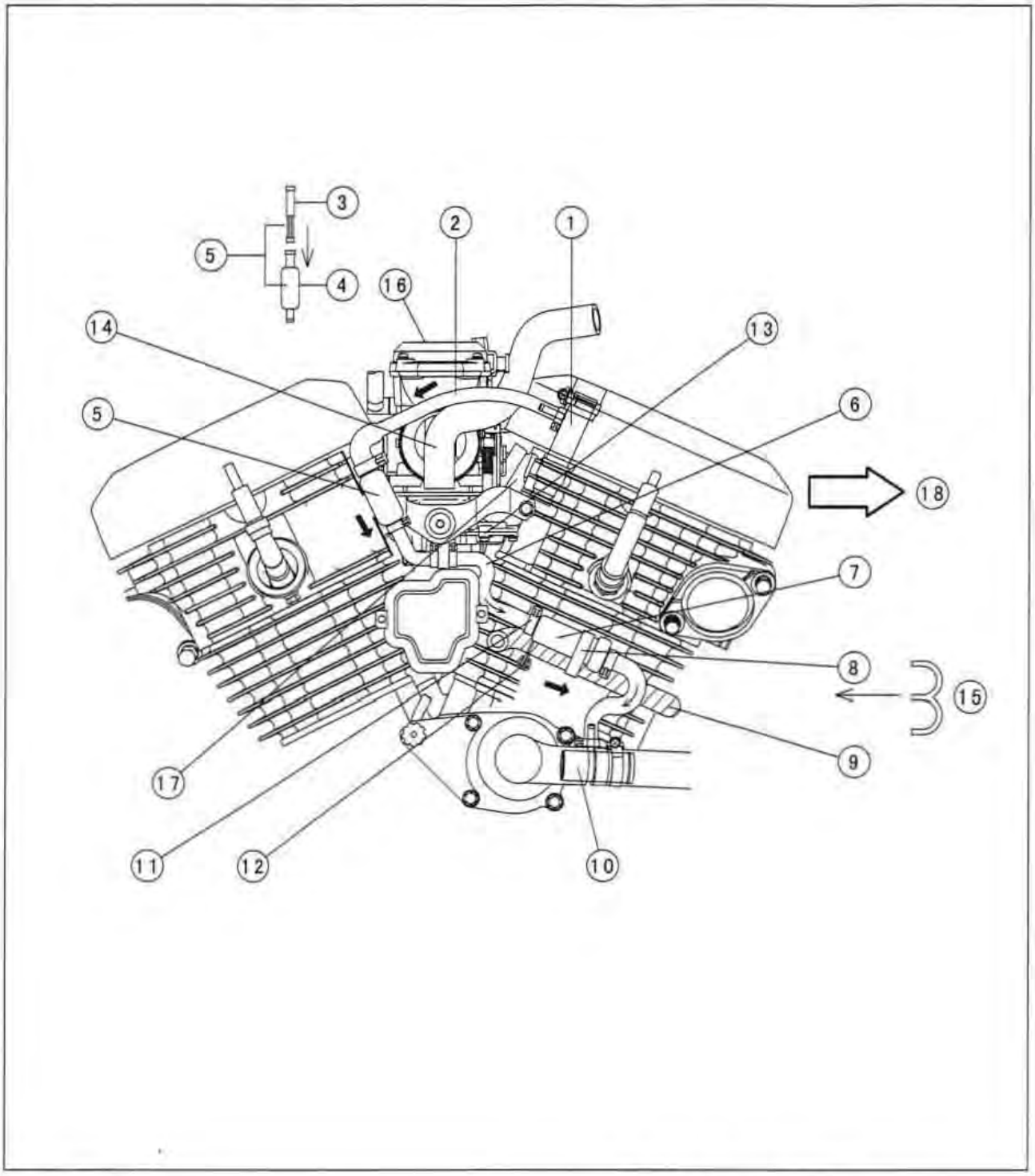

—: Coolant Flow
1. Upper Water Pipe
2. Water Hose: Run the hose above the intake manifold and the vacuum switch hose between the vacuum switch valve and lower air cleaner duct.
3. Coolant Filter
4. Coolant Filter Housing
5. Filter Assy: Run the filter assy and hose between the carburetor and intake manifold.
6. Water Hose: Run the hose under the accelerator pump.
7. Coolant Valve
8. Install the plastic clamp from outside of the engine.
9. Crankcase Breather Hose to Air Cleaner
10. Lower Water Pipe
11. Face the clamp tab upward.
12. Face the clip tab downward.
13. Accelerator Pump
14. Vacuum Switch Hose
15. Outside
16. Carburetor
17. Intake Manifold
18. Front

Cable, Wire, and Hose Routing

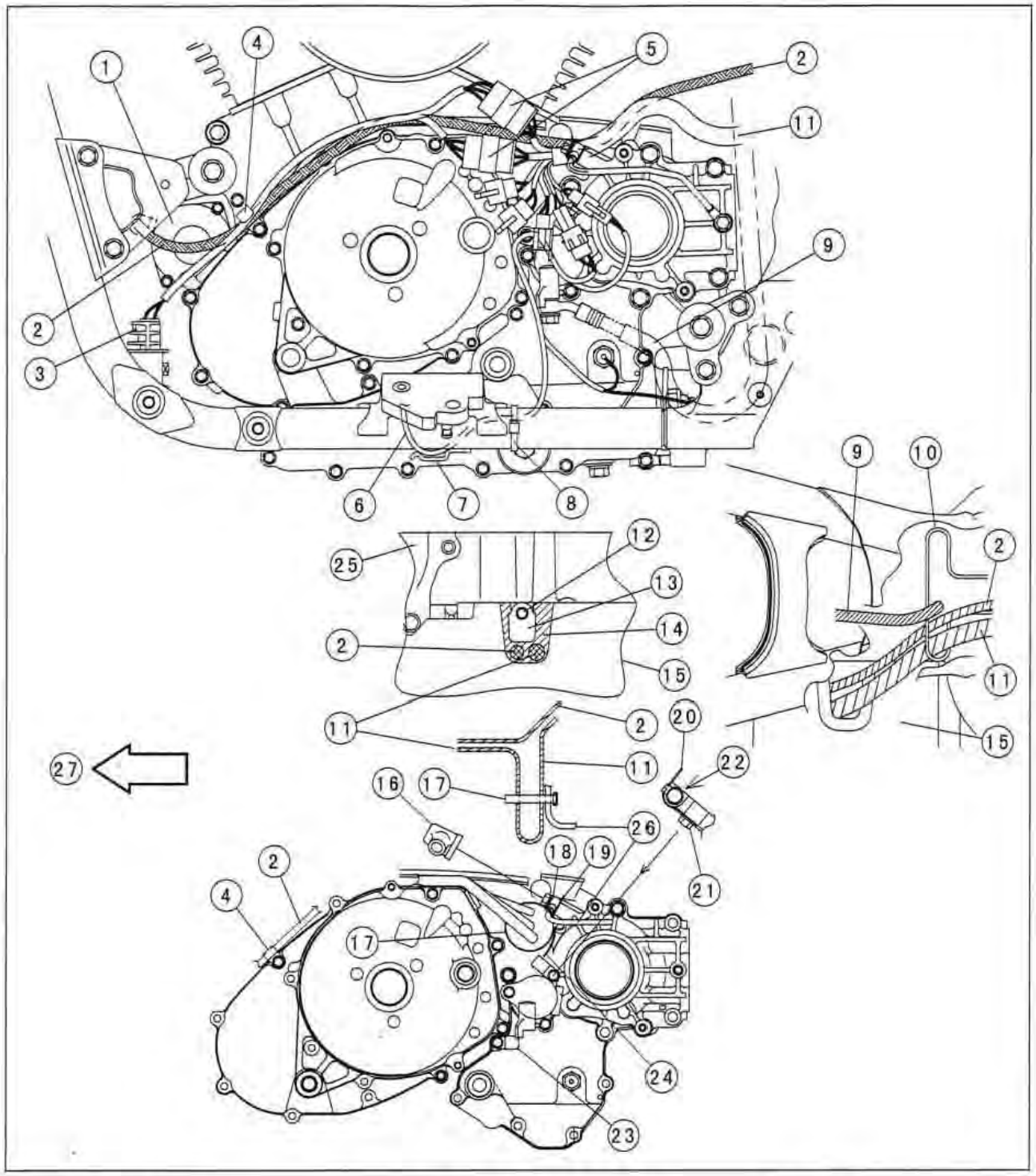

1. Electric Starter
2. Starter Lead
3. Regulator/Rectifiers
4. Clamp
5. Regulator/Rectifier Connectors
6. Sidestand Switch Lead
7. Welded Clamp
8. Clamp the sidestand switch with a bit tightness onto the frame pipe behined the sidestand bracket.
9. Clutch Hose
10. Upper Holder
11. Harness (Alternator Leads and Pickup Coil Leads)
12. Bolt
13. Holder
14. Do not run wiring around here.
15. Alternator Outer Cover
16. Rubber Boot
17. Band
18. Upper Washer (ϕ14 × ϕ8.2 mm)
19. Lower Washer (ϕ25 × ϕ8.2 mm)
20. Clamp
21. Bolt
22. Clutch Salve Cylinder Bleed Valve
23. Clamp (Neutral Switch, Oil Pressure Switch, and Sidestand Switch Leads)
24. Face the band end downward as shown.
25. Left Crankcase
26. Engine Oil Pipe
27. Front

Cable, Wire, and Hose Routing

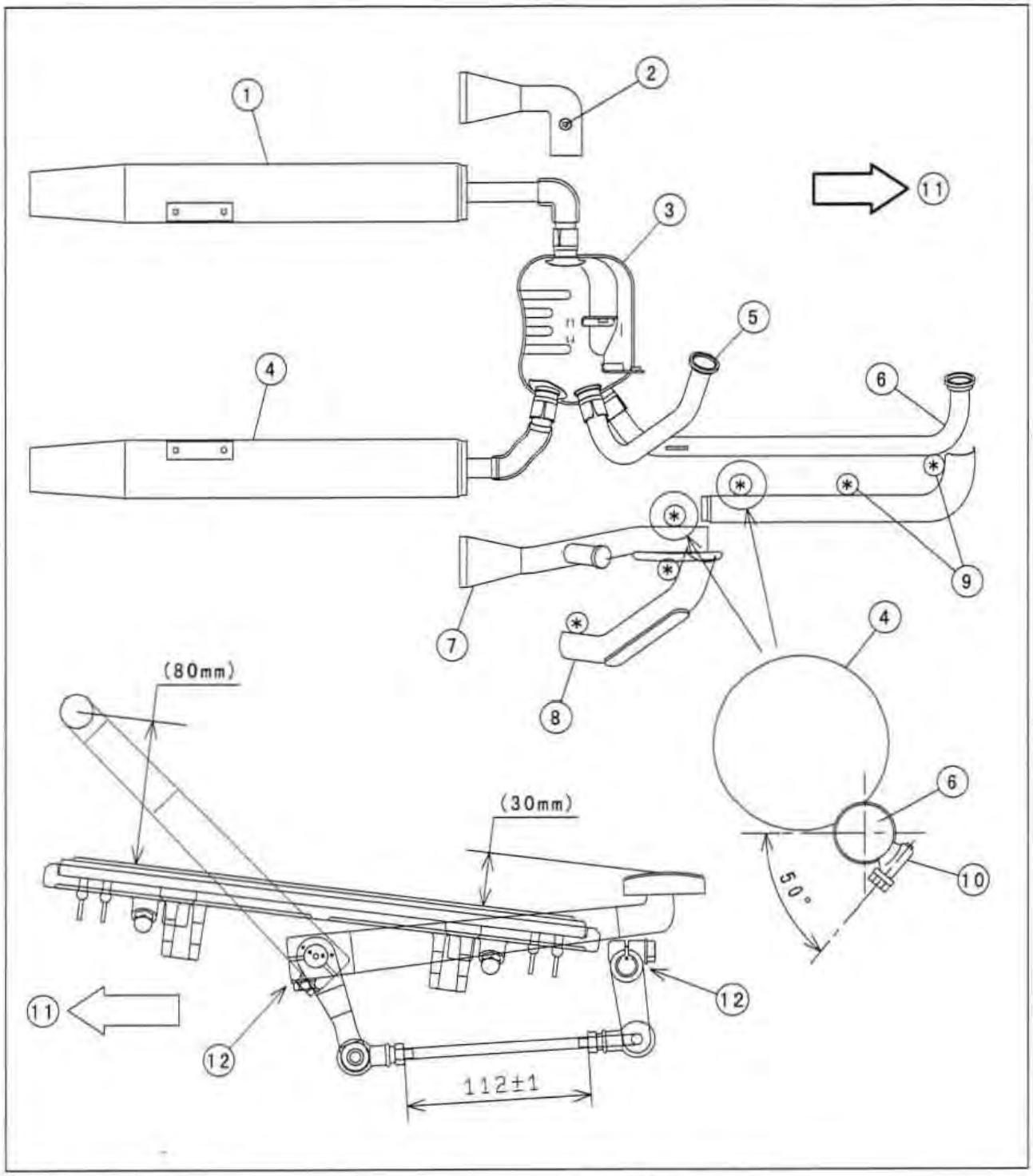

1. Left Silencer
2. Bolt applied antiseize device
3. Chamber
4. Right Silencer
5. Rear Exhaust Pipe
6. Front Exhaust Pipe
7. Right Muffler Cover
8. Rear Exhaust Pipe Cover
9. Clamp Bolts
10. Clamps
11. Front
12. Align marks.

Cable, Wire, and Hose Routing

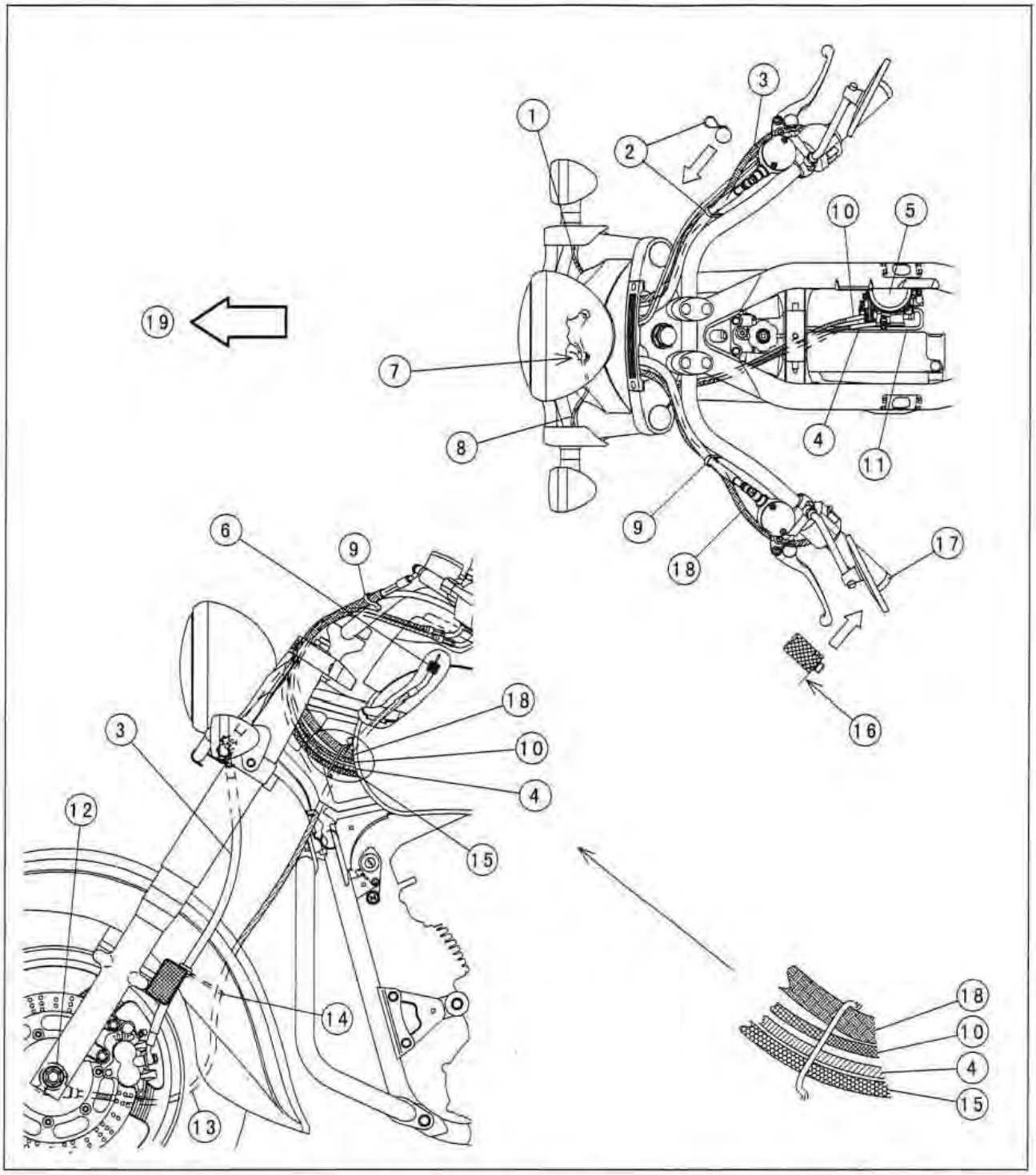

1. Run the right front signal light lead in front of the brake hose.
2. Insert the strap into the handlebar (Handlebar Switch Leads and Brake Hose): Do not run the throttle cables through the starp.
3. Front Brake Hose
4. Throttle Cable (decelerator)
5. Carburetor
6. To speedometer
7. Clamp (Left Front Signal Light Lead)
8. Left Front Signal Light Lead
9. Insert the strap into the handlebar (Handlebar Switch Leads and Clutch Hose).
10. Throttle Cable (accelerator)
11. Choke Cable
12. Speedometer Gear (right side)
13. Speedometer Cable
14. Holder (Speedometer Cable)
15. Main Harness
16. Grip End
17. Apply adhesive to the grip end cap and screw in the cap counterclockwise.
18. Clutch Hose
19. Front

Cable, Wire, and Hose Routing

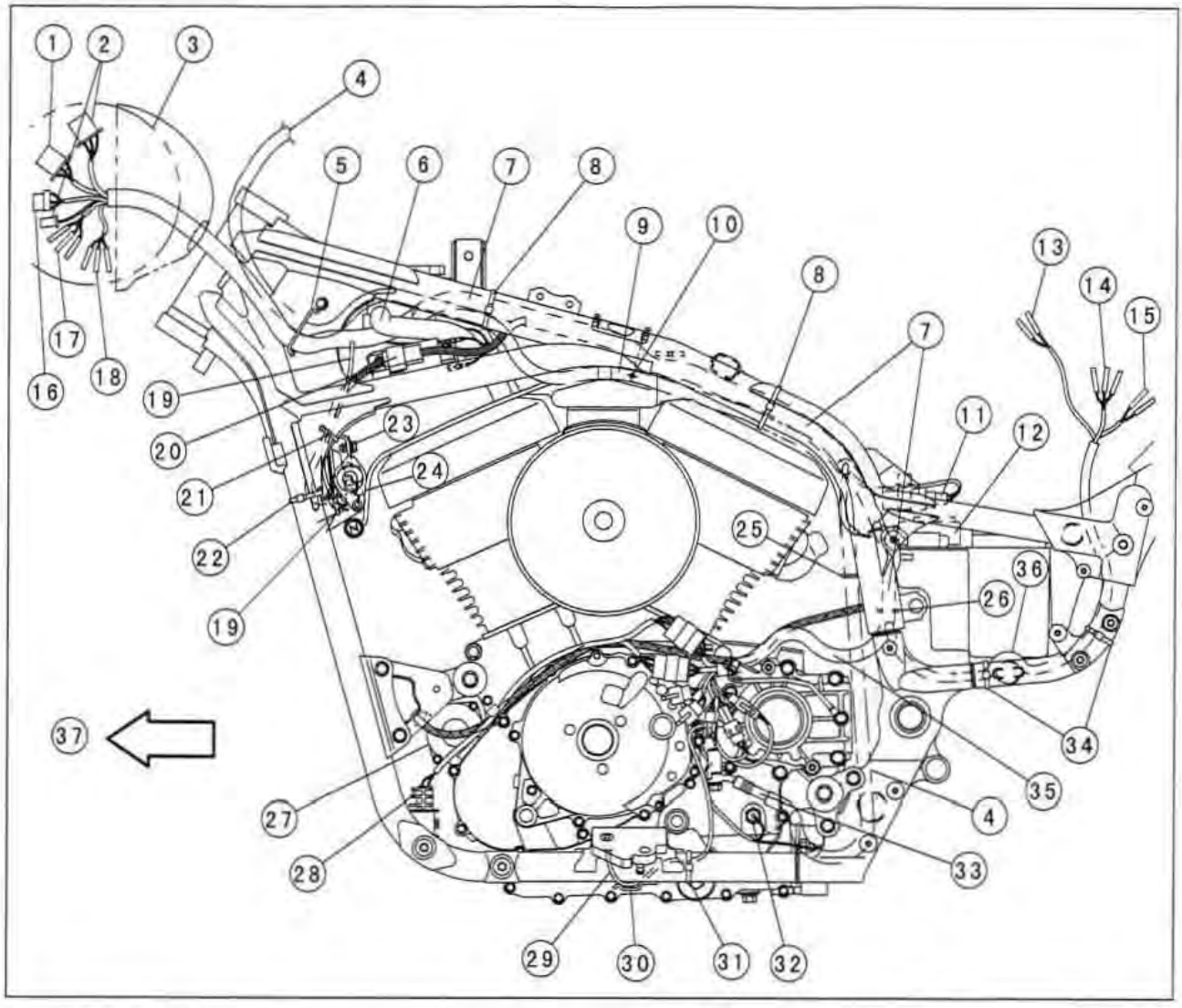

1. Headlight Connector
2. Left Handlebar Switch Lead Connector
3. Headlight Unit
4. Clutch Hose
5. Holder (Main Harness, Clutch Hose, and Throttle Cables)
6. Water Hose
7. Main Harness
8. Straps (Clutch Hose)
9. Run the clutch hose between the surge tank and frame pipe.
10. White Mark (Position here.)
11. Turn Signal Control Unit
12. Junction Box
13. Right Rear Signal Light Connectors
14. Tail/Brake Light Connectors
15. Left Rear Signal Light Connectors
16. Headlight Connector
17. Right Front Signal Light Connectors with Gray Lead
18. Left Front Signal Light Connectors with Green Lead
19. Horn Leads (Insert the horn terminals so that both leads hang down.)
20. Ignition Switch Connector
21. Strap (Ignition Switch and Horn Leads) G2/H2 Model: Do not clamp Horn Leads
22. Strap (Ignition Switch Lead)
23. Horn
24. Ignition Switch
25. Upper Holder
26. Lower Holders
27. Electric Starter
28. Regulator/Rectifiers
29. Sidestand Switch Lead
30. Welded Clamp
31. Strap (Sidestand Switch Lead)
32. Neutral Switch
33. White Paint on Engine Side of Clutch Hose
34. Straps (Rear Main Harness)
35. Harness (Alternator and Pickup Coil Leads)
36. Run the harness over the cross pipe.
37. Front

Cable, Wire, and Hose Routing

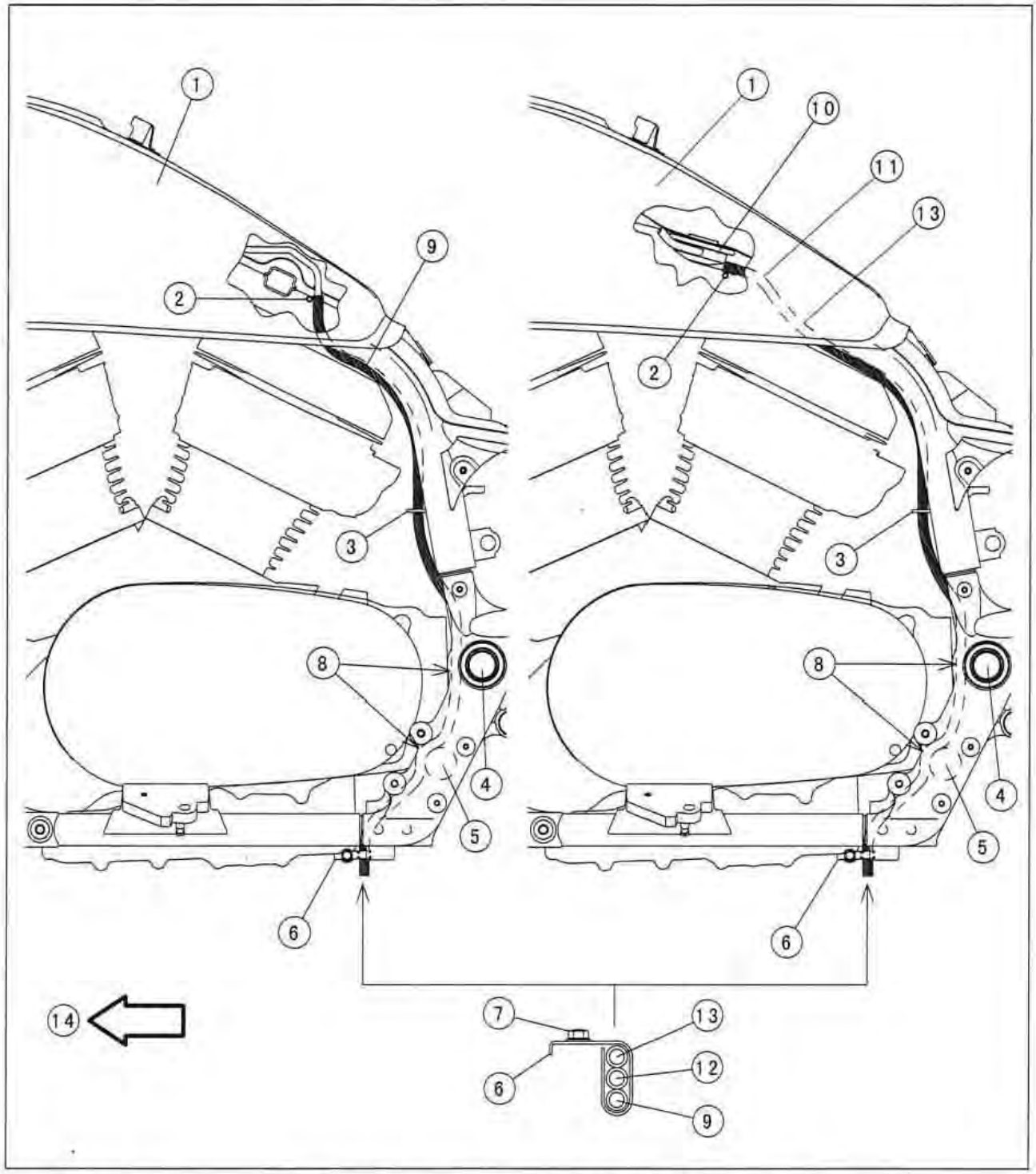

1. Fuel Tank
2. Clips
3. Upper Holder
4. Swingarm Pivot
5. Cross Pipe
6. Clamp
7. Bolt
8. Run the hoses in front of the swingarm pivot and cross pipe.
9. Fuel Tank Breather Hose (Except for California Model)
10. Install the fuel level sensor so that its leads face the left side.
11. Install the fuel level sensor cover so that the hose faces backward.
12. Reserve Tank Overflow Hose
13. Fuel Level Sensor Drain Hose: Run the hose on the right side of the carburetor vent hose.
14. Front

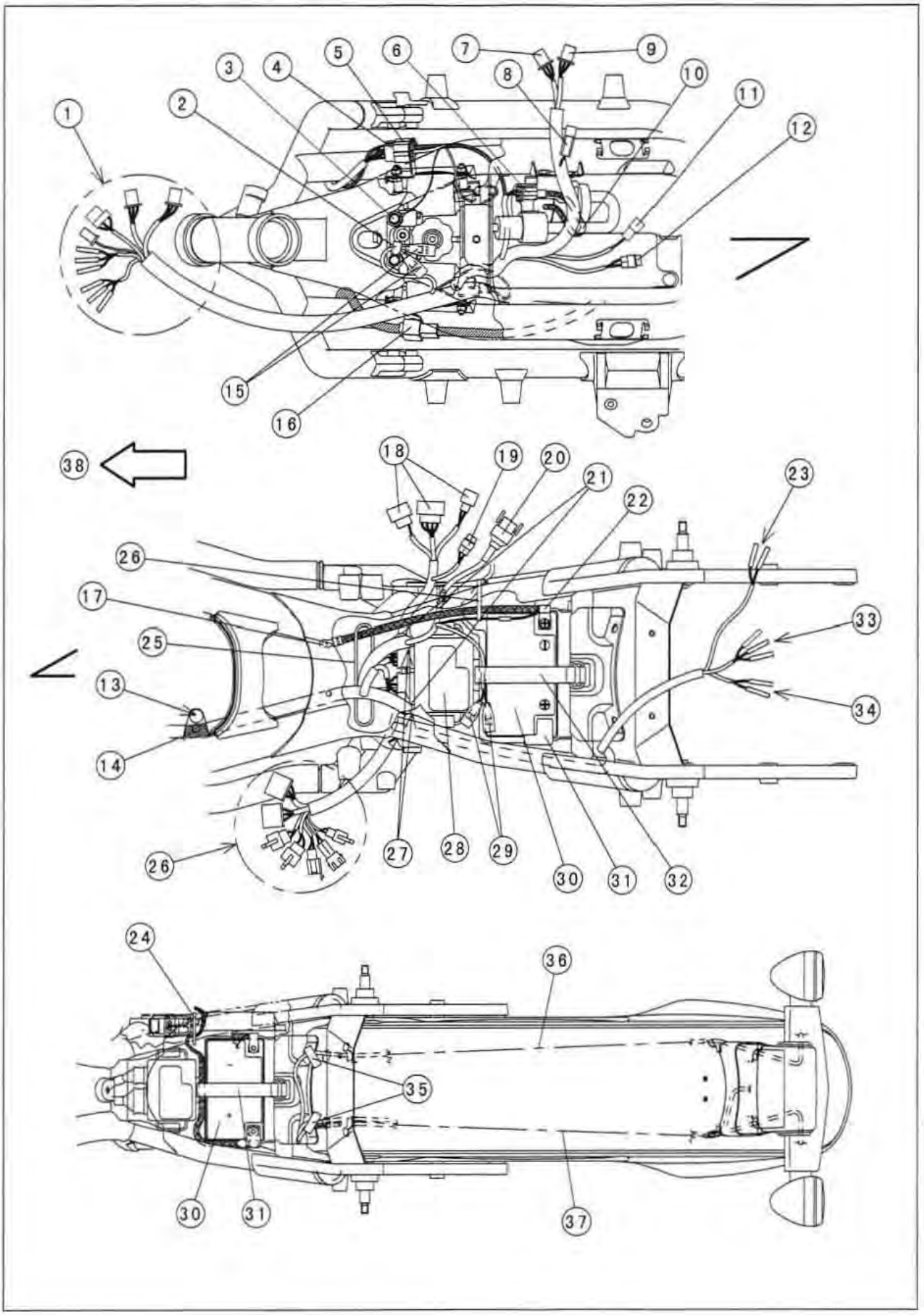
1
2
3
4
5
6
7
8
9
10
11
12
15
16
38
18
19
20
21
22
23
26
17
25
13
14
33
34
26
27
28
29
30
31
32
24
36
35
30
31
37

Cable, Wire, and Hose Routing

1. Headlight Unit
2. Clamp: Face the accessory connectors backward.
3. Frame Ground Terminal
4. Fan Motor Connector (Upper)
5. Rear Brake Light Switch Connector (Lower)
6. Fuel Pump Connector: Connect it with the fuel pump bracket between.
7. Speedometer Connector
8. Fuel Pump Diode
9. Meter Indicator Light Connector
10. Fuel Pump Yellow Wiring: Run it under the fuel hose.
11. Fuel Level Sensor Connector
12. Throttle Sensor Connector
13. Surge Tank Bracket
14. White Mark: Align it with surge tank bracket.
15. Front Accessory Connectors
16. Ignition Switch Connector
17. Engine Ground Terminal
18. IC Igniter Connectors
19. Oil Pressure Light Delay Unit Connector
20. Starter Relay Connector
21. Run these harness through the right and left lower holders.
22. Battery Negative Terminal
23. Right Rear Turn Signal Light Connectors
24. Starp (Battery Negative and Positive Leads, and Main Harness): Run the positive lead from rear to front and negative lead from front to rear.
25. Upper Holder
26. Alternator Outer Cover
27. Run right and left harness into the notches of the battery case.
28. Junction Box
29. Rear Accessory Connectors
30. Battery
31. Battery Positive Terminal
32. Battery Band
33. Tail/Brake Light Connectors
34. Left Rear Turn Siganl Light Connectors
35. Clamps
36. Right Rear Turn Signal Leads with 6 clamps (CN, ML, US) and with 7 clamps (Except for CN, ML, US)
37. Left Rear Turn Signal Leads and Tail/Brake Light Leads with 6 clamps (CN, ML, US) and with 7 clamps (Except for CN, ML, US)
    CN: Canadian Model
    ML: Malaysian Model
    US: United States
38. Front

Cable, Wire, and Hose Routing

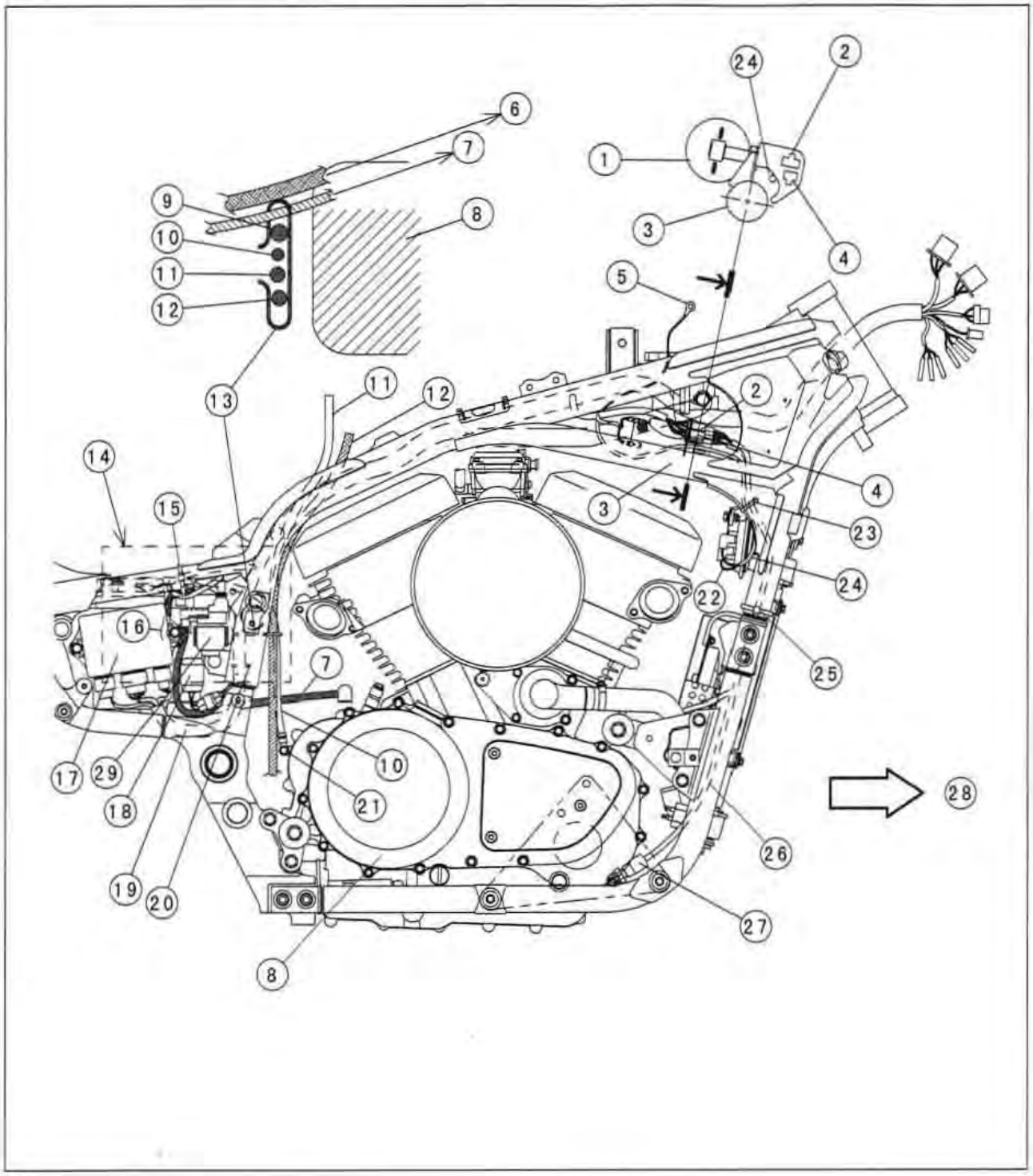

Cable, Wire, and Hose Routing

1. Right Ignition Coil
2. Radiator Fan Connector
3. Frame Pipe
4. Rear Brake Light Switch Connector
5. Frame Ground Terminal
6. Alternator Leads and Pickup Coil Leads into Alternator Cover
7. Electric Starter Lead to Electric Starter
8. Engine (Top View)
9. Clutch Hose
10. Engine Ground Lead (Battery Neagative Lead)
11. Fuel Tank Breather Hose (Except for California Model)
12. Fuel Level Sensor Drain Hose
13. Upper Holder
14. Do not pinch harness between the battery case and frame around here.
15. Strap (Battery Positive and Negative Leads, and Main Harness): Run the positive lead from rear to front and negative lead from front to rear.
16. Battery Positive Lead
17. IC Igniter
18. Oil Pressure Light Delay Unit
19. IC Igniter Wiring
20. Right and Left Lower Holders
21. Engine Ground Lead Terminal with the lead almost running vertical
22. Insert the horn terminals so that both leads hang down.
23. Strap (Rear Brake Light Switch, Radiator Fan, and Horn Leads)
    G2/H2 Model: Do not clamp Horn Leads
24. Right Horn Lead
25. Strap (Radiator Fan and Rear Brake Light Switch Leads): clamp the rear brake light switch lead with a bit tightness.
26. Rear Brake Light Switch Lead
27. Rear Brake Light Switch
28. Front
29. Starter Relay

Cable, Wire, and Hose Routing

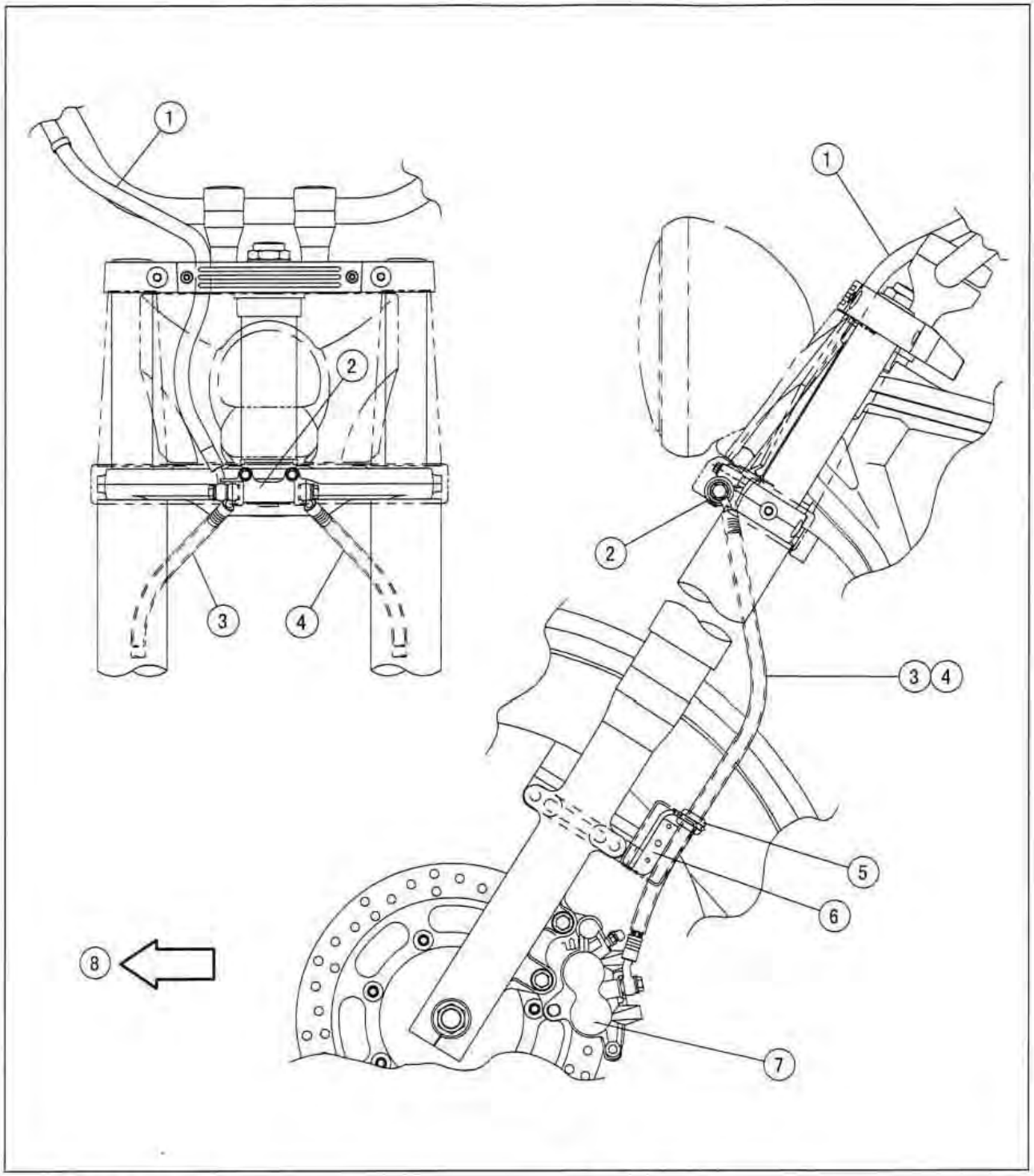

1. Front Brake Hose
2. Brake Joint
3. Right Lower Front Brake Hose
4. Left Lower Front Brake Hose
5. Right and Left Grommets
6. Right and Left Brake Hose Holders
7. Right and Left Front Calipers
8. Front

Cable, Wire, and Hose Routing

~G2A Models

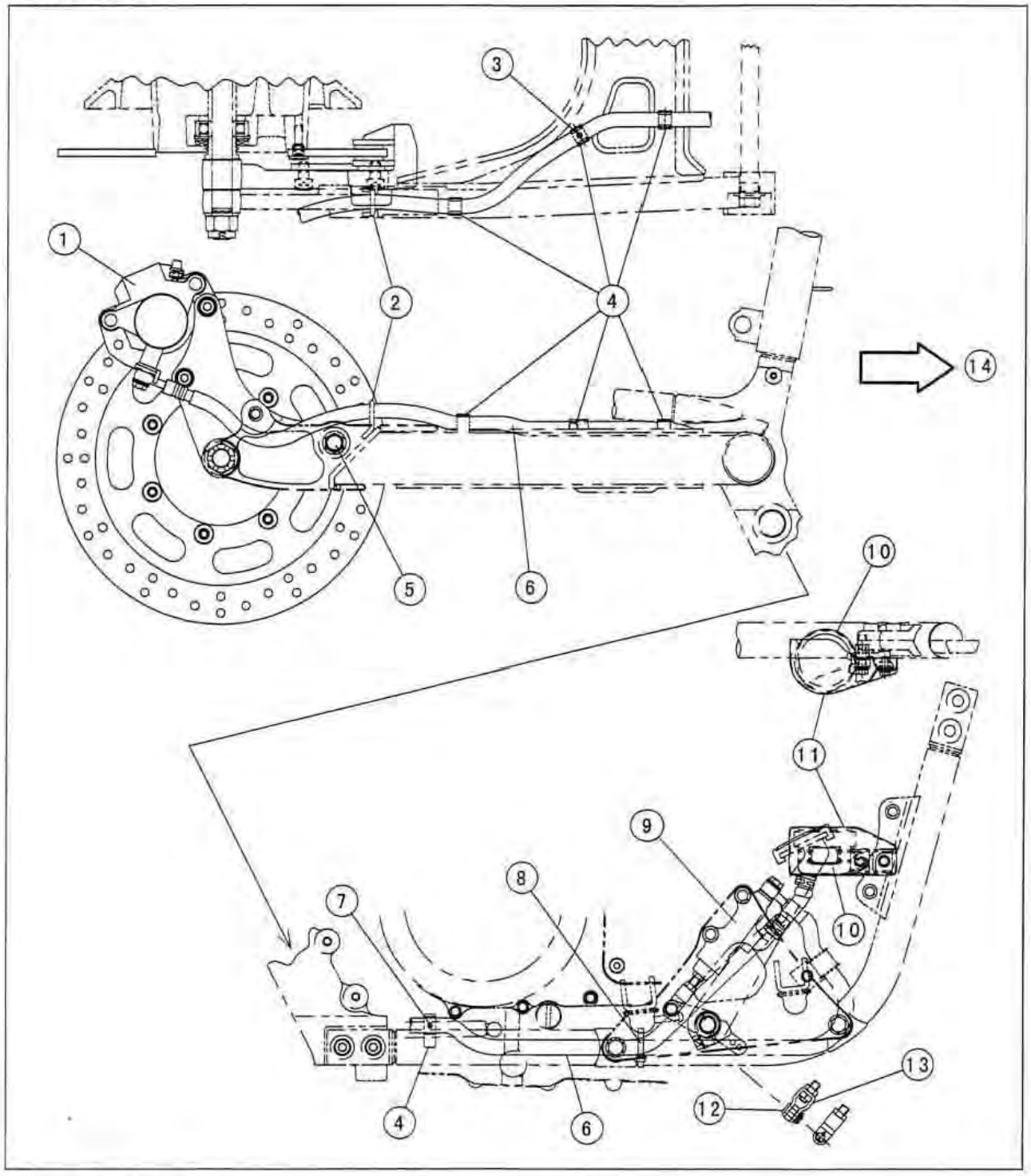

1. Rear Caliper
2. Holder
3. White Mark (Position here.)
4. Clamps
5. Rear Caliper Holder Bolt
6. Rear Brake Hose
7. White Mark (Position here.)
8. Strap
9. Rear Brake Master Cylinder
10. Rear Brake Reservoir
11. Rear Brake Reservoir Cover
12. Rear Brake Rod Joint Pin
13. Push Rod Clevis
14. Front

Cable, Wire, and Hose Routing

G3 Model

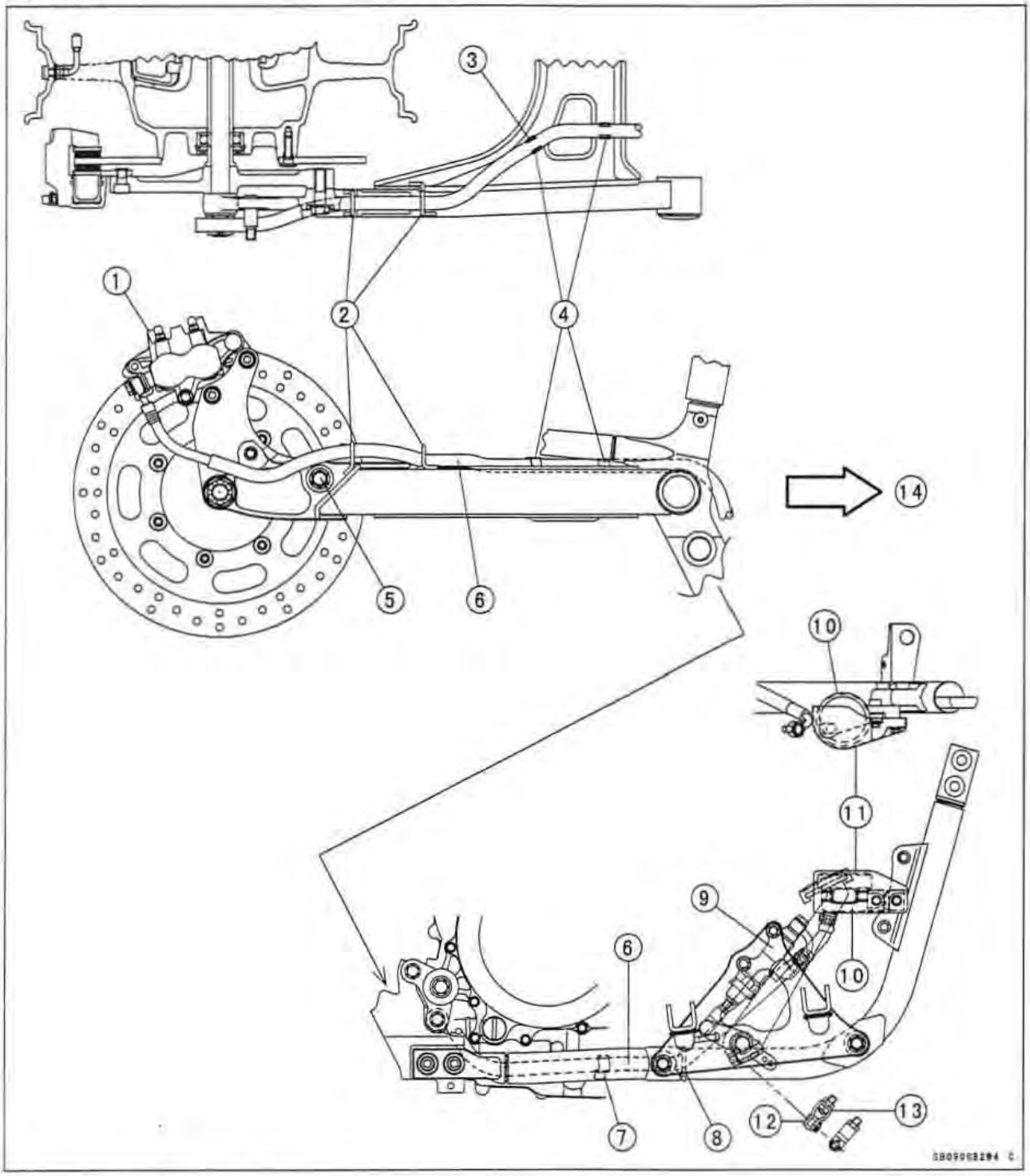

1. Rear Caliper
2. Holder
3. White Mark (Position here.)
4. Clamps
5. Rear Caliper Holder Bolt
6. Rear Brake Hose
7. White Mark (Position here.)
8. Strap
9. Rear Brake Master Cylinder
10. Rear Brake Reservoir
11. Rear Brake Reservoir Cover
12. Rear Brake Rod Joint Pin
13. Push Rod Clevis
14. Front

Cable, Wire, and Hose Routing

Evaporative Emission Control System (California Model only)

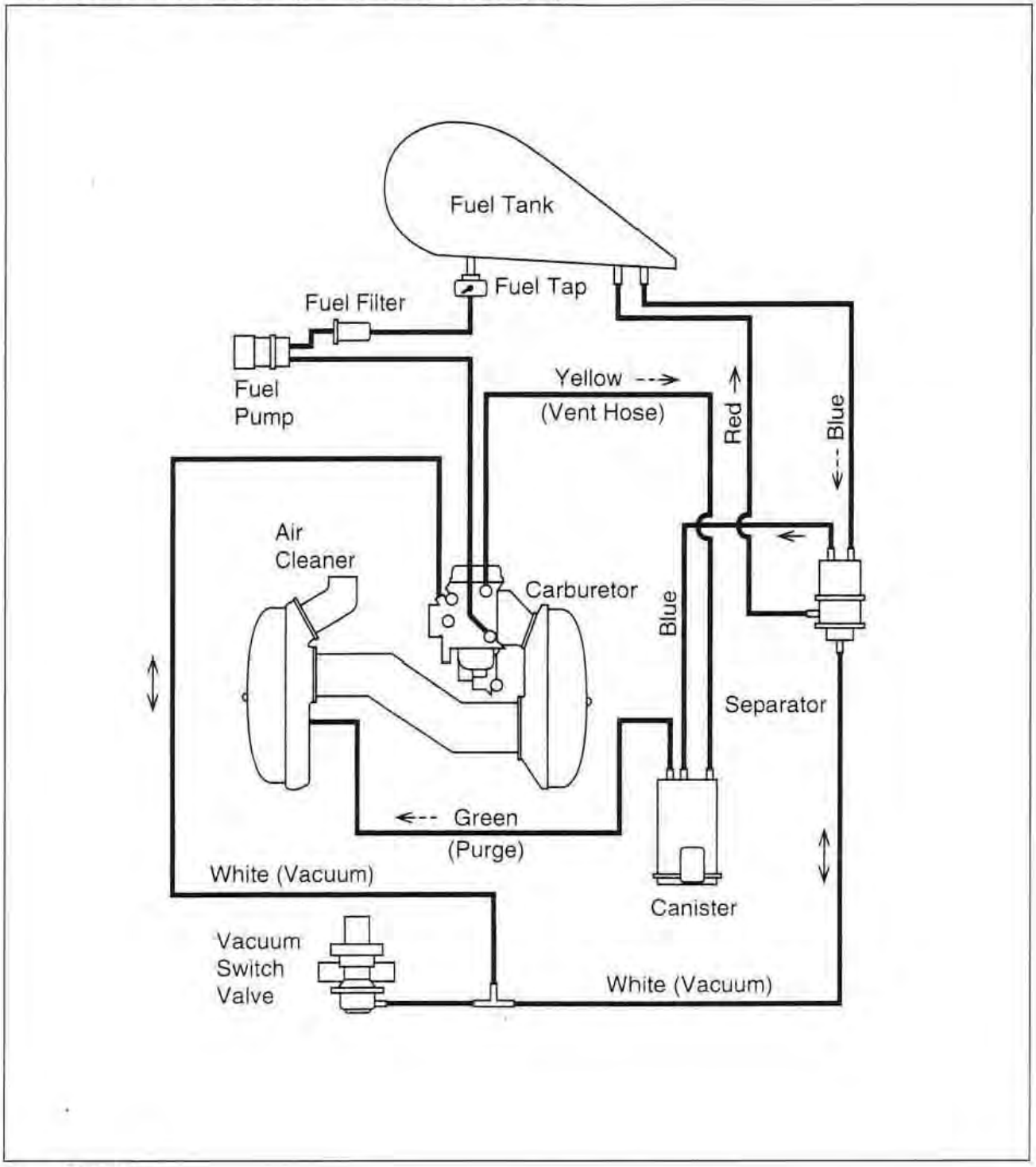

- - —: Vaper Flow
—: Fuel Flow
—/—: Vacuum Pulsation Flow

Cable, Wire, and Hose Routing

Evaporative Emission Control System (California Model only)

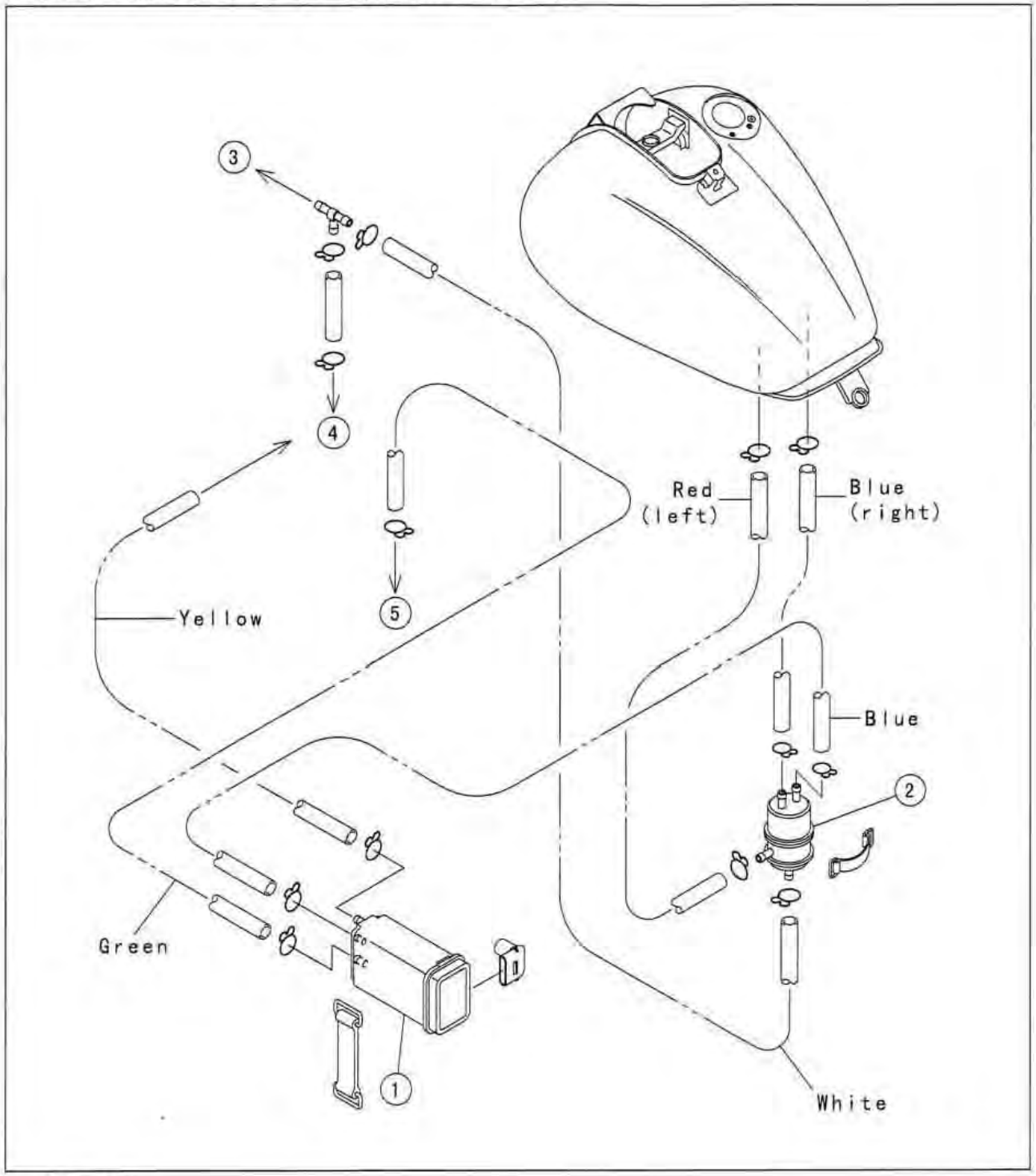

1. Canister
2. Separator
3. Vacuum Switch Valve
4. Carburetor
5. Air Cleaner Housing

Fuel System

2

Table of Contents

Exploded View....2-2
Inlet System....2-6
Specifications....2-8
Throttle Grip and Cables....2-9
Free Play Inspection....2-9
Free Play Adjustment....2-9
Throttle Cable Installation....2-9
Throttle Cable Lubrication and Inspection....2-9
Choke Cable....2-10
Free Play Inspection....2-10
Choke Cable Installation....2-10
Choke Cable Lubrication and Inspection....2-10
Carburetor....2-11
Idle Speed Inspection....2-11
Idle Speed Adjustment....2-11
High Altitude Performance Adjustment....2-11
Fuel System Cleanliness Inspection....2-11
Service Fuel Level Inspection....2-12
Service Fuel Level Adjustment....2-13
Carburetor Removal....2-13
Carburetor Installation....2-15
Carburetor Disassembly....2-16
Carburetor Assembly....2-17
Carburetor Cleaning....2-18
Carburetor Inspection....2-18
Coolant Valve Inspection....2-20
Coolant Filter Cleaning....2-20
Inlet Manifold Removal....2-20
Inlet Manifold Installation....2-21
Fuel Pump....2-22
Removal....2-22
Installation....2-22
Fuel Filter Inspection....2-22
Air Cleaner....2-23
Element Removal....2-23
Element Cleaning and Inspection....2-23
Left Air Cleaner Housing Removal....2-23
Right Air Cleaner Housing Removal....2-24
Right Air Cleaner Housing Installation....2-24
Lower Air Cleaner Duct Removal....2-25
Surge Tank Removal....2-25
Surge Tank Installation....2-25
Fuel Tank....2-26
Fuel Tank Removal....2-26
Fuel Tank Installation....2-27
Fuel Tank and Cap Inspection....2-27
Fuel Tank Cleaning....2-27
Fuel Tap Removal....2-28
Fuel Tap Installation....2-28
Fuel Tap Inspection....2-28
Evaporative Emission Control System....2-29
Parts Removal/Installation....2-29
Hose Inspection (Periodic Inspection)....2-29
Separator Inspection (Periodic Inspection)....2-29
Separator Operation Test....2-30
Canister Inspection (Periodic Inspection)....2-30

Exploded View

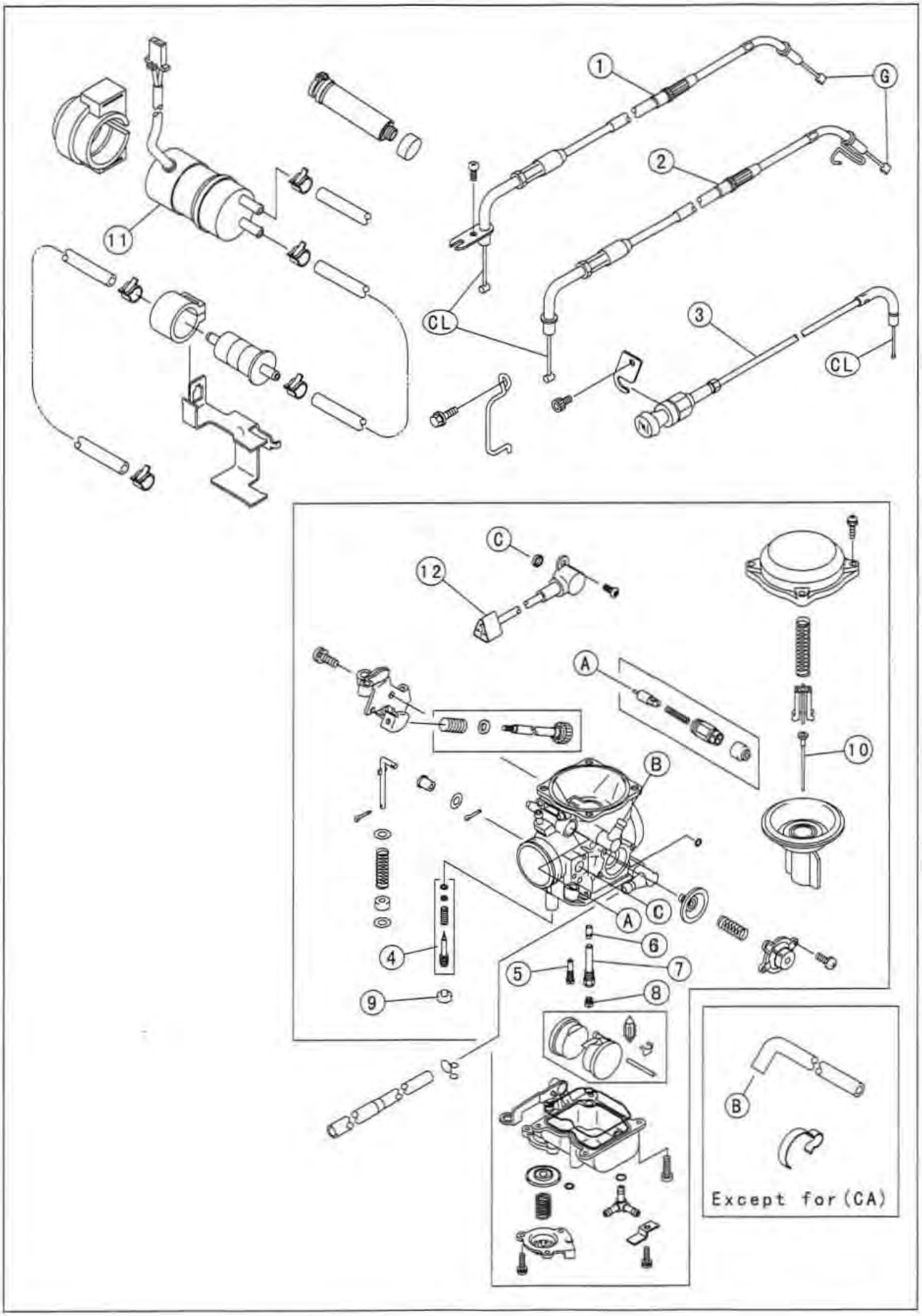

Exploded View

1. Throttle Cable (accelerator)
2. Throttle Cable (decelerator)
3. Choke Cable
4. Pilot Screw
5. Pilot (Slow) Jet
6. Needle Jet
7. Needle Jet Holder
8. Main Jet
9. Plug (US, ST, CA)
10. Jet Needle
11. Electric Fuel Pump
12. Throttle Switch

G: Apply grease.
CL: Apply cable lubricant.
CA: California Model
ST: Swiss Model
US: United States Model

Exploded View

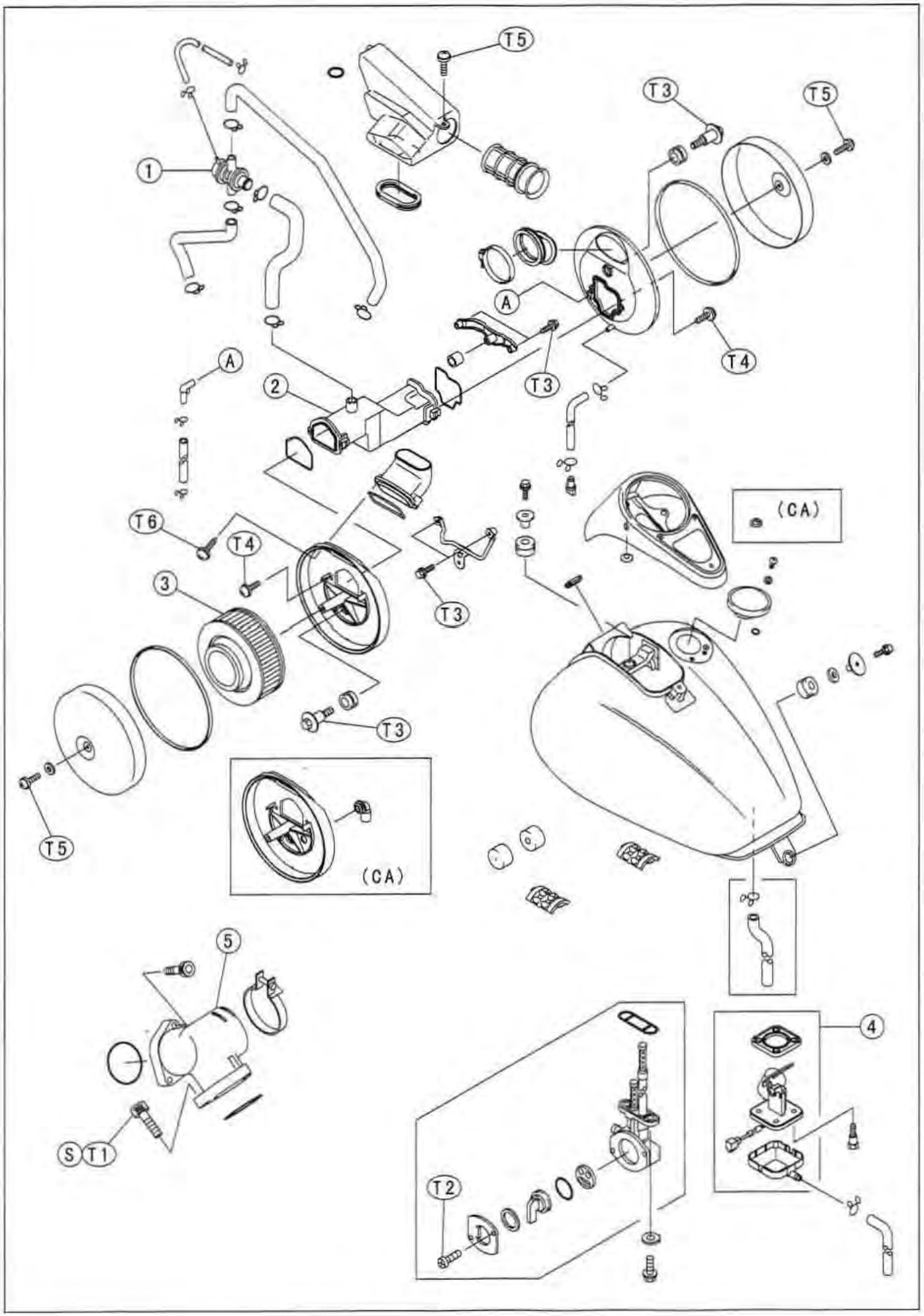

Exploded View

1. Vacuum Switch Valve
2. Lower Air Cleaner Duct
3. Air Cleaner Element
4. Fuel Level Sensor
5. Inlet Manifold

S: Follow the specific tightening sequence.
T1: 12 N·m (1.2 kg·m, 104 in·lb)
T2: 0.8 N·m (0.08 kg·m, 7 in·lb)
T3: 9.8 N·m (1.0 kg·m, 87 in·lb)
T4: 2.2 N·m (0.22 kg·m, 19 in·lb)
T5: 6.9 N·m (0.7 kg·m, 61 in·lb)
T6: 2.2 N·m (0.22 kg·m, 19 in·lb)

Inlet System

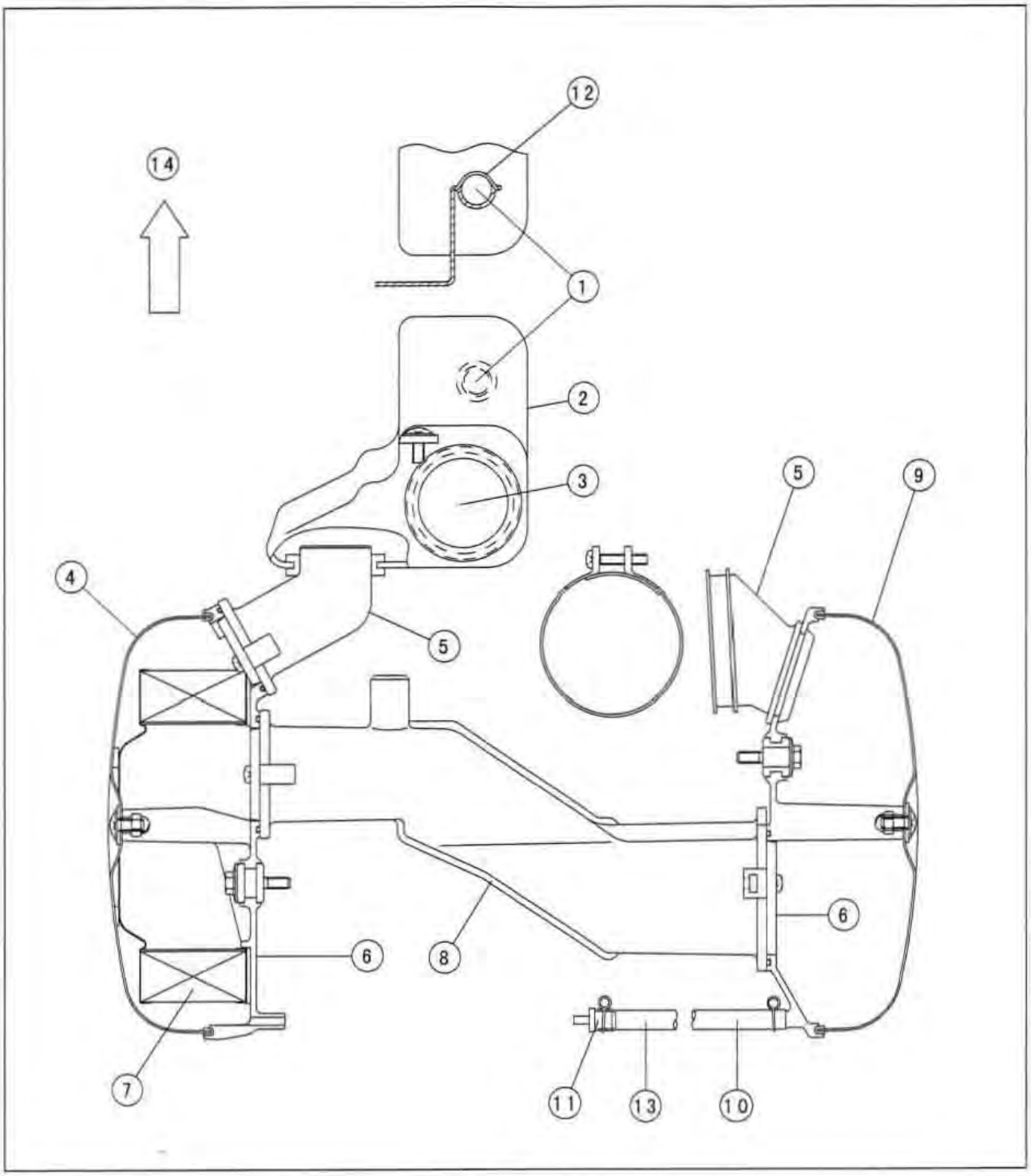

Inlet System

1. Stopper
2. Surge Tank
3. Inlet
4. Left Air Cleaner Cover
5. Upper Air Cleaner Duct
6. Air Cleaner Bases
7. Air Cleaner Element
8. Lower Air Cleaner Duct
9. Right Air Cleaner Cover
10. Drain Hose
11. Plug
12. O-ring
13. Run the drain hose between cylinders.
14. Front

2-8 FUEL SYSTEM

Specifications

Item	Standard
Throttle Grip Free Play	2 ~ 3 mm
Carburetor:	
Make, Type	KEIHIN CVK40
Idle speed	800 ± 50 r/min (rpm),
	(CA) (FG) (AR) (ST) 1 000 ± 50 r/min (rpm)
	G2/H2 Model: 1 000 ± 50 r/min (rpm)
Pilot screw (turns out, for reference)	(1 3/4 ± 1/4), (ST) (1 1/4 ± 1/4)
	G2/H2 Model: 1 3/4 ± 1/4
Service fuel level	0 ~ 2 mm below the float bowl mating surface
Float height	19.0 ± 2 mm
Main jet	#142
Main air jet	#100
Needle jet	#6 (P/No. 16017 -1276)
Jet needle	N2PY
Pilot jet (slow jet)	#45
Pilot air jet (slow air jet)	#95
Starter jet	#65
Throttle valve angle	10°
High altitude carburetor specifications (US)	
Pilot jet	#42
Main jet	#140

(AR) : Austrian Model
(ST) : Switzerland Model
(CA) : California Model
(US) : U.S.A. Model
(FG) : Germany Model

Pilot Screw [A]
Pilot Jet [B]
Jet Needle [C]
Needle Jet [D]
Pilot Air Jet [E]
Main Air Jet [F]
Valve Seat [G]
Float Valve [H]
Needle Jet Holder [I]
Main Jet [J]

Special Tools - Pilot Screw Adjuster, C: 57001-1292
Carburetor Drain Plug Wrench, Hex 3: 57001-1269
Fuel Level Gauge: 57001-1017

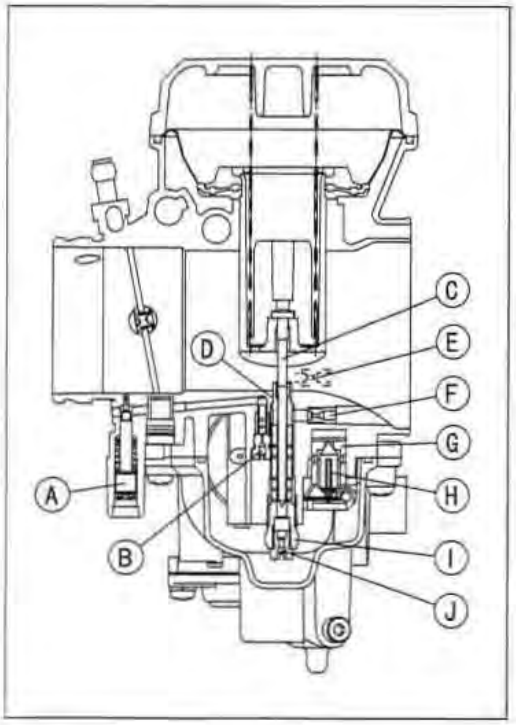

Throttle Grip and Cables

Free Play Inspection

- Check the throttle grip free play [A].

★ If the free play is incorrect, adjust the throttle cable.

Throttle Grip Free Play
Standard: 2 ~ 3 mm

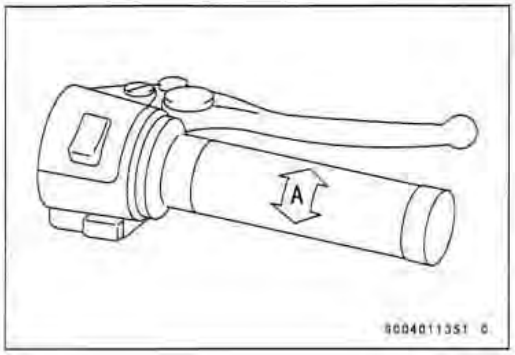

- Check that the throttle grip moves smoothly from full open to close, and the throttle closes quickly and completely in all steering positions by the return spring.

★ If the throttle grip does not return properly, check the throttle cable routing, grip free play, and cable damage. Then lubricate the throttle cable.

- Run the engine at the idle speed, and turn the handlebar all the way to the right and left to ensure that the idle speed does not change.

★ If the idle speed increase, check the throttle cable free play and the cable routing.

Free Play Adjustment

- Loosen the locknuts [A] and screw the adjusters [B] all the way in so as to give the throttle grip plenty of play.
- Turn out the decelerator cable [C] adjuster until there is no play.
- Tighten the locknut.
- Turn the accelerator cable [D] adjuster until the proper amount of throttle grip free play is obtained and tighten the locknut.

★ If the proper amount of free play cannot be obtained by using the adjusters at the throttle grip, use the adjusters in the middle of the throttle cables.

- Give the throttle grip plenty of play by turning the adjusters at the grip in fully.

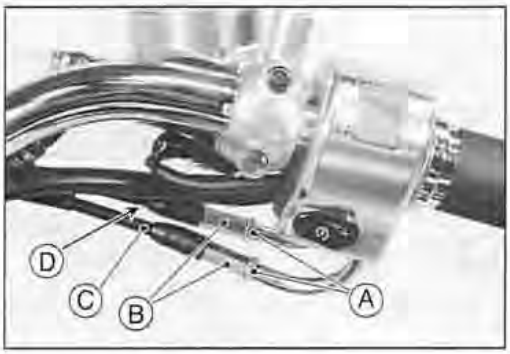

- Remove the fuel tank (see Fuel Tank Removal).
- Loosen the locknuts [A] and turn the adjusters in the middle of the throttle cables all the way in to give the throttle grip plenty of play.
- With the throttle grip fully closed, turn the decelerator cable adjuster [B] until the inner cable just becomes tight and tighten the locknut.
- Turn the accelerator cable adjuster [C] until the correct throttle grip free play is obtained and tighten the locknut.

Front [D]

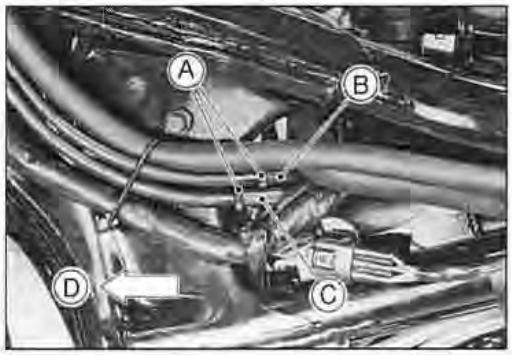

⚠ WARNING

Operation with incorrectly routed or improperly adjusted cables could result in an unsafe riding condition.

Throttle Cable Installation

- Install the throttle cables in accordance with the Cable, Wire, and Hose Routing section in the General Information chapter.
- Install the lower ends of the throttle cables in the bracket on the carburetor after installing the upper ends of the throttle cable in the grip.
- After installation, adjust each cable properly.

⚠ WARNING

Operation with incorrectly routed or improperly adjusted cables could result in an unsafe riding condition.

Throttle Cable Lubrication and Inspection

- Whenever the cables are removed, or in accordance with the Periodic Maintenance Chart, lubricate the throttle cables (see General Lubrication in the Appendix chapter).
- Apply a thin coating of grease to the cable upper ends.
- Use a commercially available pressure cable lubricator to lubricate the cables.
- With the cable disconnected at both ends, the cable should move freely in the cable housing.

Choke Cable

Free Play Inspection

- Check that the choke inner cable slides smoothly by moving the choke knob [A] to the front and rear.

★ If there is any irregularity, replace the choke cable.



Choke Cable Installation

- Install the choke cable in accordance with the Cable, Wire, and Hose Routing section in the General Information chapter.
- After installation, check that the choke kuob moves smoothly.

⚠WARNING

Operation with an incorrectly routed cable could result in an unsafe riding condition.

Choke Cable Lubrication and Inspection

- Whenever the cable is removed, or in accordance with the Periodic Maintenance Chart, lubricate the choke cable (see General Lubrication in the Appendix chapter).
  - Use a commercially available pressure cable lubricator to lubricate the cable.
  - With the cable disconnected at both ends, the cable should move freely in the cable housing.

Carburetor

Idle Speed Inspection

- Start the engine and warm it up thoroughly.
- With the engine idling, turn the handlebar to both sides.

★ If handlebar movement changes the idle speed, the throttle cables may be improperly adjusted or incorrectly routed, or damaged. Be sure to correct any of these conditions before riding (see Cable, Wire, and Hose Routing section in the General Information chapter).

⚠ WARNING

Operation with improperly adjusted, incorrectly routed, or damaged cables could result in an unsafe riding condition.

- Check idle speed.

★ If the idle speed is out of the specified range, adjust it.

Idle Speed

Standard: 800 ± 50 r/min (rpm),
(California and 1500 H) 1000 ± 50r/min (rpm)

Idle Speed Adjustment

- Start the engine and warm it up thoroughly.
- Turn the adjusting screw [A] until the idle speed is correct.
- Open and close the throttle a few times to make sure that the idle speed is within the specified range. Readjust if necessary.

Front [B]

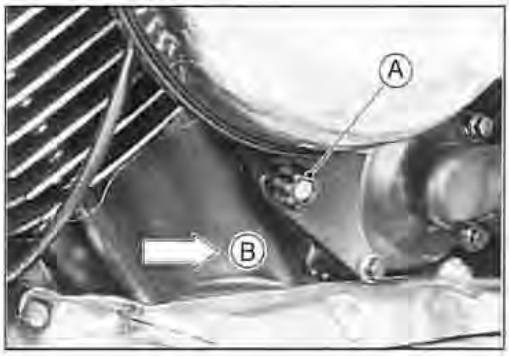

High Altitude Performance Adjustment

To improve the EMISSION CONTROL PERFORMANCE of US Model operated above **4000 feet**, Kawasaki recommends the following Environmental Protection Agency (EPA) approved modification.

- Change the main jet and pilot jet for high altitude use.

High Altitude Carburetor Specifications

Pilot Jet: #42 (92064-1135)
Main Jet: #140 (92063-1013)

Fuel System Cleanliness Inspection

⚠ WARNING

Gasoline is extremely flammable and can be explosive under certain conditions. Turn the ignition switch OFF. Do not smoke. Make sure the area is well-ventilated and free from any source of flame or sparks; this includes any appliance with a pilot light.

Carburetor

- Remove:
  Fuel Tank (see Fuel Tank Removal)
  Fuel Pump (see Fuel Pump Removal)
  Right Air Cleaner Base, Upper Air Cleaner Duct, and Right Air Cleaner Base Holder [A]
- Place a conduit under the carburetor drain hose [B]. The conduit leads to a suitable container.
  Front [C]
- Turn the fuel tap to the RES position.
- Turn out the drain plug a few turns and drain the float bowl.

Special Tool - Carburetor Drain Plug Wrench, Hex 3: 57001-1269

- Check to see if water or dirt comes out.
- Tighten the drain plug and turn the fuel tap to the OFF position.

★ If any water or dirt appears during the above inspection, clean the fuel system (see Carburetor Cleaning and Fuel Tank Cleaning).



Service Fuel Level Inspection

⚠ WARNING

Gasoline is extremely flammable and can be explosive under certain conditions. Turn the ignition switch OFF. Do not smoke. Make sure the area is well-ventilated and free from any source of flame or sparks; this includes any appliance with a pilot light.

- Remove the carburetor, and hold it upright on a stand (see Carburetor Removal).
- Prepare an auxiliary fuel tank and connect the fuel hose to the carburetor.
- Prepare a fuel hose (6 mm in outer diameter and about 300 mm long).
- Connect the fuel level gauge [A] to the carburetor float bowl with the fuel house.

Special Tool - Fuel Level Gauge: 57001-1017

- Hold the gauge [A] vertically against the side of the carburetor body so that the middle line [B] is several millimeters higher than the float bowl mating surface [C].
- Turn the fuel tap to the ON position to feed fuel to the carburetor and gauge, then turn the carburetor drain plug [D] out a few turns.

Special Tool - Carburetor Drain Plug Wrench, Hex 3: 57001-1269

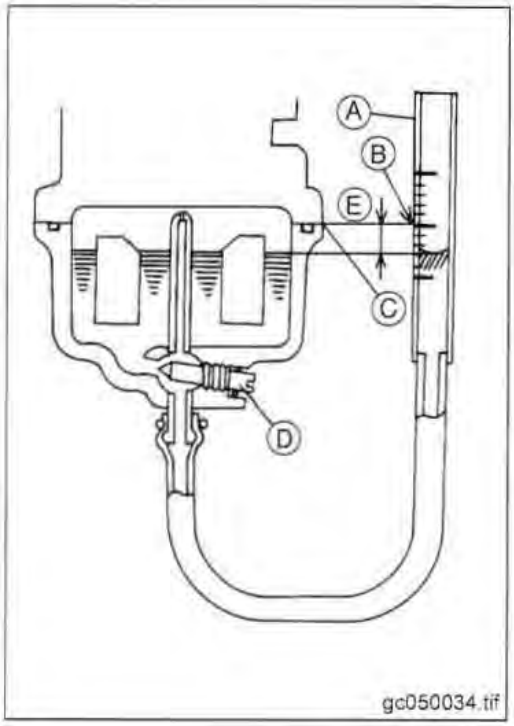

- Wait until the fuel level in the gauge settles.
- Keeping the gauge vertical, slowly lower the gauge until the middle line is even with the float bowl mating surface.

NOTE

Do not lower the middle line below the float bowl mating surface. If the gauge is lowered and then raised again, the fuel level measured shows somewhat higher than the actual fuel level. If the gauge is lowered too far, dump the fuel out of it into a suitable container and start the procedure over again.

- Read the fuel level [E] in the gauge and compare to the specification.
- Tighten the drain plug and remove the fuel level gauge.

★ If the fuel level is incorrect, adjust it (see Service Fuel Level Adjustment).

Service Fuel Level
Standard: 0 ~ 2 mm below the float bowl mating surface

Carburetor

Service Fuel Level Adjustment

⚠ WARNING

Gasoline is extremely flammable and can be explosive under certain conditions. Turn the ignition switch OFF. Do not smoke. Make sure the area is well-ventilated and free from any source of flame or sparks; this includes any appliance with a pilot light.

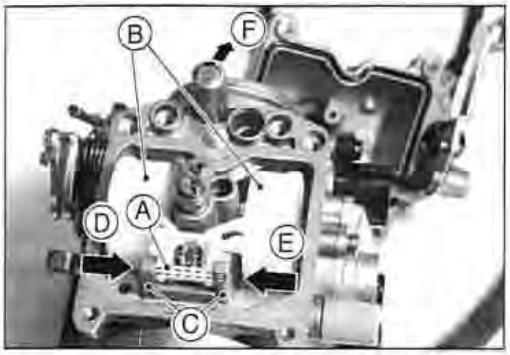

- Remove the carburetor, and drain the fuel into a container.
- Remove the float bowl (see Carburetor Disassembly).
- Tap the pivot pin [A] out and remove the floats [B].
- When removing and installing the pin, note the following.
  - Be careful not to break the pin holder legs [C].
  - When removing the pin, tap [D] the left end of the pin.
  - When installing the pin, tap [E] the right end of the pin.

Front [F]

- Bend the tang [A] on the float arm very slightly to change the float height.

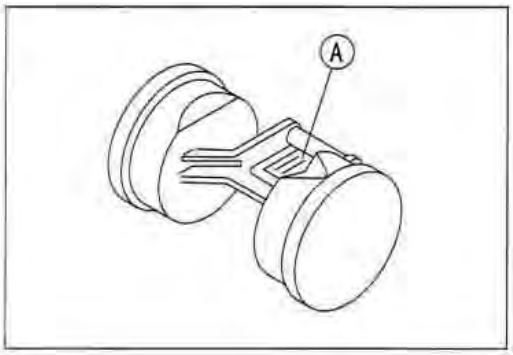

- Measure the float height tilting the carburetor so that the tang on the float just touches the needle rod in the float valve.
  - Increasing the float height lowers the fuel level and decreasing the float height raises the fuel level.

Float Height
Standard: 19 ± 2 mm

- Assemble the carburetor, and recheck the fuel level.

★ If the fuel level cannot be adjusted by this method, the float or the float valve is damaged.

Float Bowl Mating Surface [A]
Float Valve Needle Rod (contacted but unloaded) [B]
Float [C]
Float Height [D]

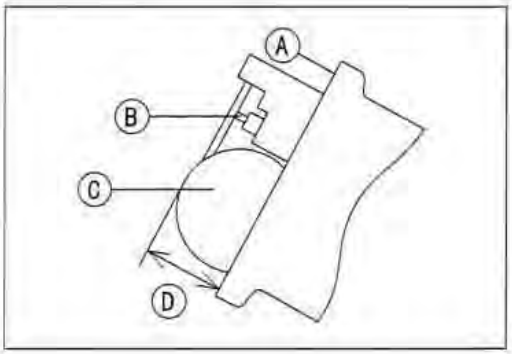

Carburetor Removal

⚠ WARNING

Gasoline is extremely flammable and can be explosive under certain conditions. Turn the ignition switch OFF. Do not smoke. Make sure the area is well-ventilated and free from any source of flame or sparks; this includes any appliance with a pilot light.

Carburetor

- Remove:
  Fuel Tank (see Fuel Tank Removal)
  Choke Knob [A]
  Right Air Cleaner Housing (see Air Cleaner Housing Removal)
  Carburetor Hoses



⚠ WARNING

To avoid burns, do not remove the coolant valve and filter hoses when engine is still hot. Wait until it cools down.

- Remove the surge tank (see this chapter).
- Drain the coolant (see Cooling System chapter).
- Remove:
  Throttle Sensor Lead Connector [A]
  Cooling Hose [B]
- Loosen the carburetor clamp screw [C].
  Front [D]

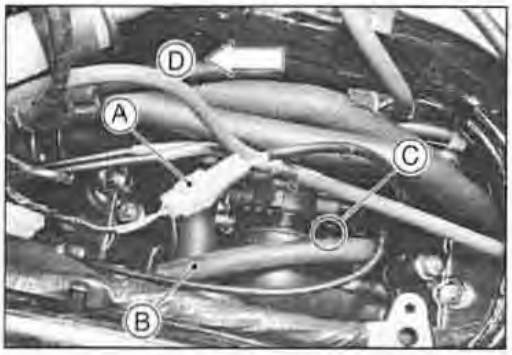

- Remove:
  Right Air Cleaner Base Holder [A]
- Take out the carburetor and remove the coolant valve lower hose [B] from the float bowl.
  Front [C]



- Remove the right handlebar switch housing and remove the throttle cable upper ends.
  Accelerator Cable [A]
  Decelerator Cable [B]
- Remove the carburetor and throttle cable lower ends.
- Stuff piece of lint-free, clean cloth into the inlet manifold to keep dirt out of the engine.

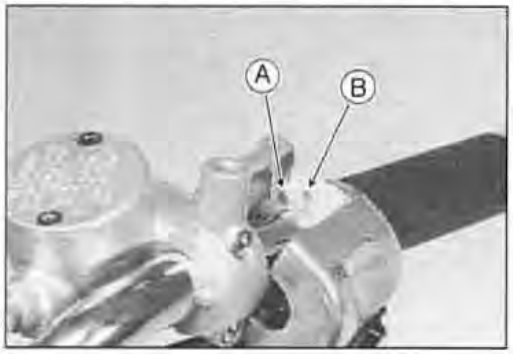

⚠ WARNING

If dirt or dust is allowed to pass through into the carburetor, the throttle may become stuck, possibly causing an accident.

CAUTION

If dirt gets through into the engine, excessive engine wear and possibly engine damage will occur.

Coolant Flow Chart

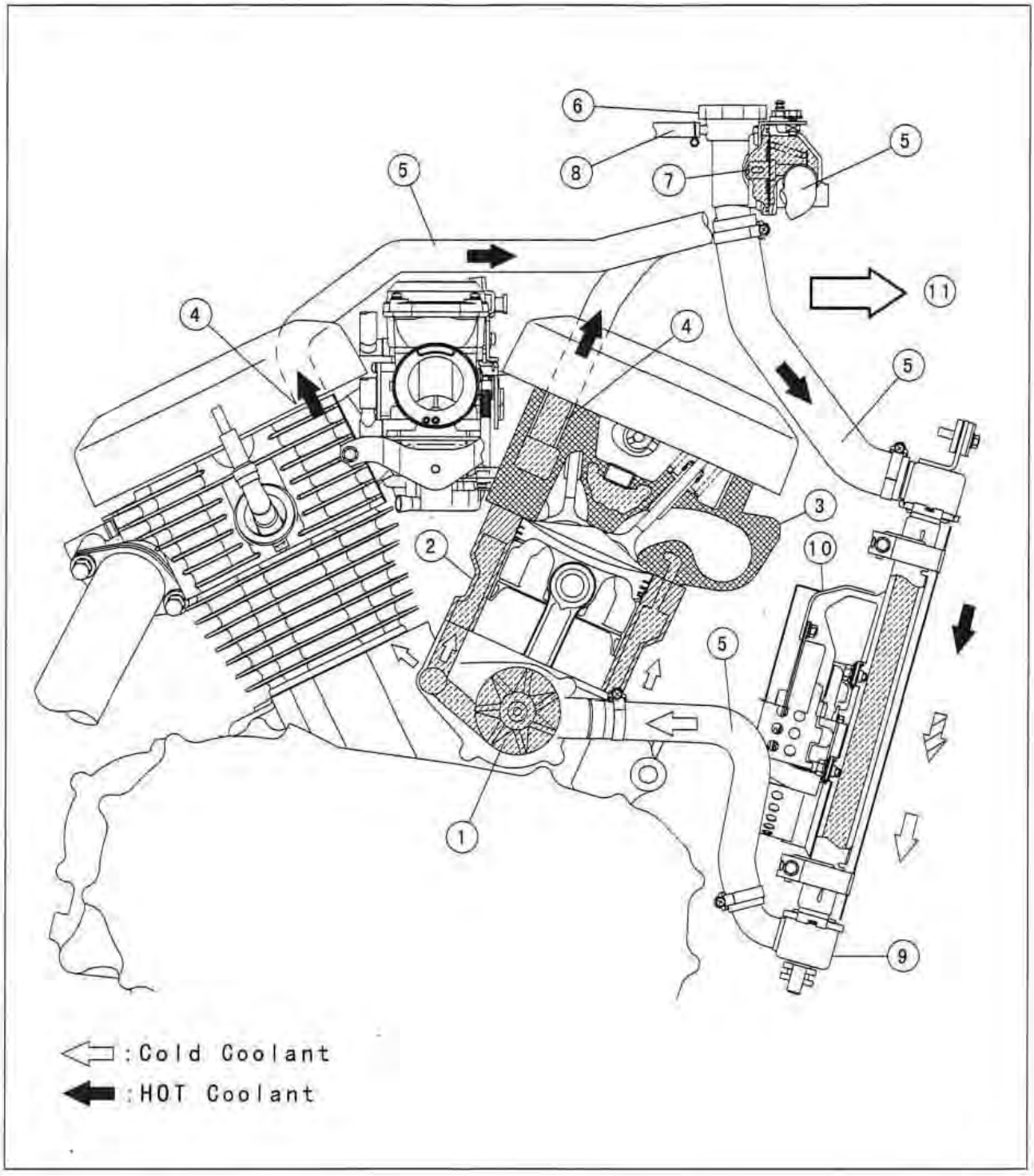

1. Water Pump
2. Water Jacket
3. Cylinder Head
4. Water Pipe
5. Water Hose
6. Radiator Cap
7. Thermostat
8. Reserve Tank Hose
9. Radiator
10. Radiator Fan
11. Front

3-6 COOLING SYSTEM

Specifications

Coolant provided when shipping:	
Type (recommended)	Permanent type antifreeze (soft water and ethylene glycol plus corrosion and rust inhibitor chemicals for aluminum engines and radiators)
Color	Green
Mixed ratio	Soft water 50%, coolant 50%
Freezing point	– 35°C (– 31°F)
Total amount	2.3 L (reserve tank full level including radiator and engine)
Radiator Cap:	
Relief pressure	93 ~ 123 kPa (0.95 ~ 1.25 kg/m^2, 14 ~ 18 psi)
Thermostat:	
Valve opening temperature	58 ~ 62°C (136 ~ 144°F)
Valve full opening lift	8 mm or more @95°C (203°F)

Special Tools - Bearing Driver Set: 57001-1129
Bearing Remover Shaft: 57001-1265
Bearing Remover Head, ϕ10 × ϕ12: 57001-1266

Sealant - Kawasaki Bond (Silicone Sealant): 56019-120

Coolant

Coolant Deterioration Inspection

- Remove the right side cover (see Frame chapter).
- Visually inspect the coolant [A] in the reserve tank.

★ If whitish cotton-like wafts are observed, aluminum parts in the cooling system are corroded. If the coolant is brown, iron or steel parts are rusting. In either case, flash the cooling system.

★ If the coolant gives off an abnormal smell, check for a cooling system leak. It may be caused by exhaust gas leaking into the cooling system.

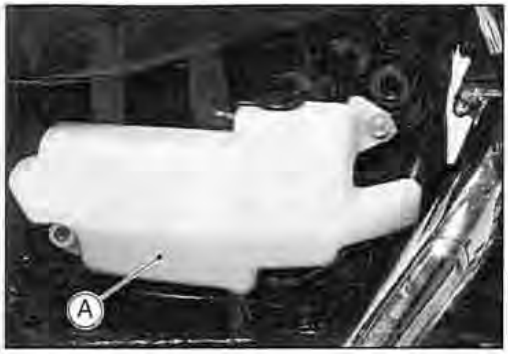

Coolant Level Inspection

NOTE

◇ *Check the level when the engine is cold (room or ambient temperature).*

- Check the coolant level in the reserve tank with the motorcycle held upright. The coolant level should be between the FULL level and the LOW level (In the photo, the right side cover has been removed for clarity).

  Front [A]
  Reserve Tank [B]
  FULL Level [C]
  LOW Level [D]

★ If the coolant level is lower than the LOW level, remove the right side cover and the reserve tank cap then add coolant to the FULL level.

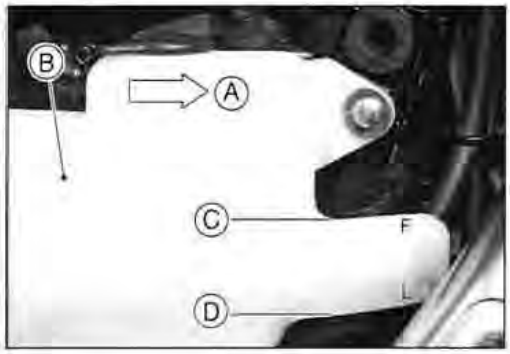

CAUTION

For refilling, add the specified mixture of coolant and soft water. Adding water alone dilutes the coolant and degrades its anticorrosion properties.
The diluted coolant can attack the aluminum engine parts. In an emergency, soft water can be added, but the diluted coolant must be returned to the correct mixture ratio within a few days.
If coolant must be added often, or the reserve tank has run completely dry, there is probably leakage in the cooling system. Check the system for leaks.

Coolant Draining

⚠ WARNING

To avoid burns, do not remove the radiator cap or try to change the coolant when the engine is still hot. Wait until it cools down.
Coolant on tires will make them slippery, and can cause an accident and injury.
Immediately wash away any coolant that spills on the frame, engine, wheels, or other painted parts.
Since coolant is harmful to the human body, do not use for drinking.

Coolant

- Place a container under the radiator drain bolt [A], then remove the drain bolt.



- Remove the meter unit on the fuel tank (see Electrical System chapter).
- Remove the radiator cap [A] in two steps. First turn the cap counterclockwise to the first stop. Then push and turn it further in the same direction and remove the cap.
  - The coolant will drain from the radiator and engine.



- Remove the water pump drain plug [A]. The remaining coolant will drain from the water pump [B].
  - Place a suitable conduit under the drain hole of the pump cover. The conduit leads to a suitable container.

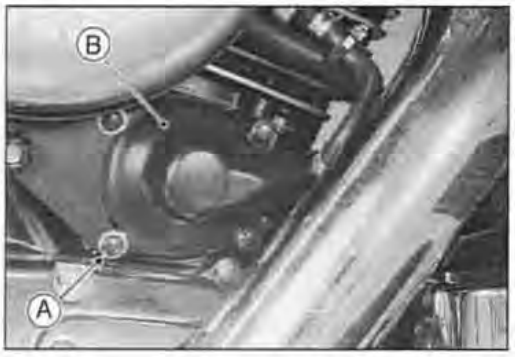

- Remove :
  Right Side Cover (see Frame chapter)
  Reserve Tank Bolts
- Turn over the reserve tank [A], remove the hose [B], and pour the coolant into a suitable container.

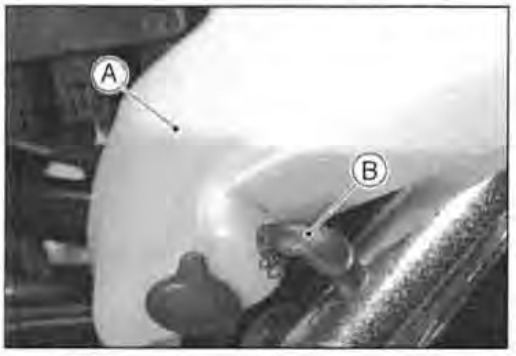

Coolant Filling

- Tighten the drain bolt at the bottom of the radiator.

Torque - Radiator Drain Bolt: 7.4 N·m (0.75 kg·m, 65 in·lb)

- Fill the radiator up to the filler neck [A] with coolant, and install the radiator cap.

NOTE

Pour in the coolant slowly so that it can expel the air from the engine and radiator.

- Fill the reserve tank up to the FULL level with coolant, and install the cap.



Coolant

CAUTION

Soft or distilled water must be used with the antifreeze (see Specifications in this chapter) in the cooling system.
If hard water is used in the system, it causes scales accumulation in the water passages, and considerably reduces the efficiency of the cooling system.

Water and Coolant Mixture Ratio (when shipping)

Soft Water	:	**50 %**
Coolant	:	**50 %**
Freezing Point	:	**−35°C (−31°F)**
Total Amount	:	**2.3 L**

NOTE

Choose a suitable mixture ratio by referring to the coolant manufacturer's directions.

- Bleed the air from the cooling system using the air bleeder bolt [A].
- Tighten the air bleeder bolt.

Torque - Coolant Air Bleeder Bolt: 7.8 N·m (0.80 kg·m, 69 in·lb)

Front [B]

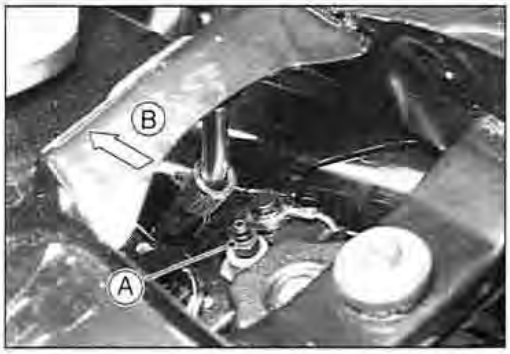

- Bleed the air from the cooling system while the engine is running.
  - Start the engine with the radiator cap removed and run it until no more air bubbles [A] can be seen in the coolant.
  - Tap the radiator hoses to force any air bubbles caught inside.
  - Stop the engine and add coolant up to the radiator filler neck.
- Install the radiator cap.



- Remove the reserve tank cap.
- Fill the reserve tank up to the FULL level [A] with coolant and install the cap.

CAUTION

Do not add more coolant above the FULL level.

- Install the right side cover.

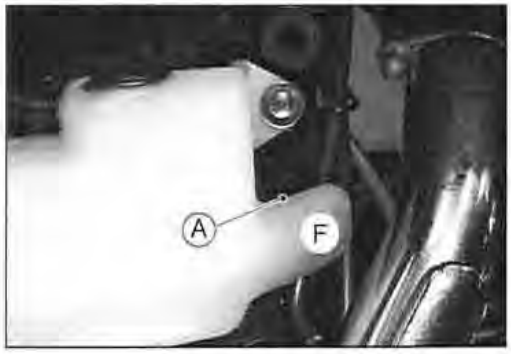

Coolant

Pressure Testing

- Remove the meter unit (see Electrical System chapter).
- Remove the radiator cap, and install a cooling system pressure tester [A] on the radiator filler neck [B].

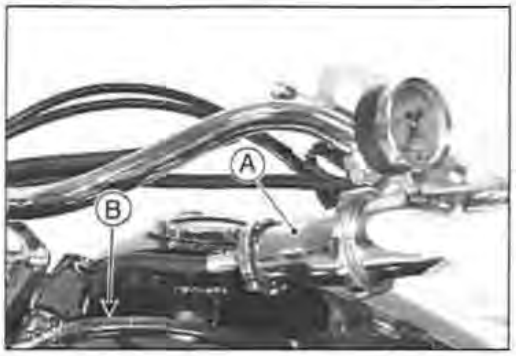

NOTE

○ *Wet the cap sealing surfaces with water or coolant to prevent pressure leakage.*

- Build up pressure in the system carefully until the pressure reaches 123 kPa (1.25 kg/cm^2, 18 psi).

CAUTION

During pressure testing, do not exceed the pressure for which the system is designed. The maximum pressure is 123 kPa (1.25 kg/cm^2, 18 psi).

- Watch the gauge for at least 6 seconds.

★ If the pressure holds steady, the system is all right.

★ If the pressure drops and no external source is found, check for internal leaks. Droplets in the engine oil indicate internal leakage. Check the cylinder head gasket and the water pump.

- Remove the pressure tester, replenish the coolant, and install the radiator cap.

Cooling System Flushing

Over a period of time, the cooling system accumulates rust, scale, and lime in the water jacket and radiator. When this accumulation is suspected or observed, flush the cooling system. If this accumulation is not removed, it will clog up the water passage and considerably reduce the efficiency of the cooling system.

- Drain the cooling system (see Coolant Draining).
- Fill the cooling system with fresh water mixed with a flushing compound.

CAUTION

Do not use a flushing compound which is harmful to the aluminum engine and radiator. Carefully follow the instructions supplied by the manufacturer of the cleaning product.

- Warm up the engine, and run it at normal operating temperature for about ten minutes.
- Stop the engine, and drain the cooling system.
- Fill the system with fresh water.
- Warm up the engine and drain the system.
- Repeat the previous two steps once more.
- Fill the system with a permanent type coolant and bleed the air from the system (see Coolant Filling).

Water Pump

Water Pump Removal

- Drain the coolant (see Coolant Draining).
- Remove:
  Water Hose [A]

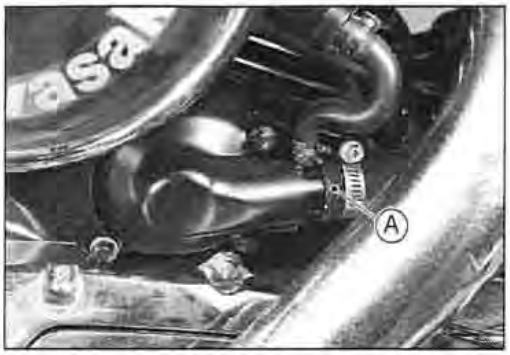

- Remove:
  Water Pump Cover Bolts [A]
  Water Pump Cover [B]

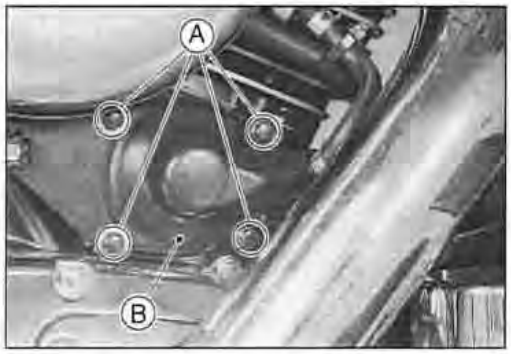

- Remove:
  Impeller Bolt [A]
  Impeller [B]

NOTE

The impeller bolt has left-hand threads. Turn the bolt clockwise and remove it.

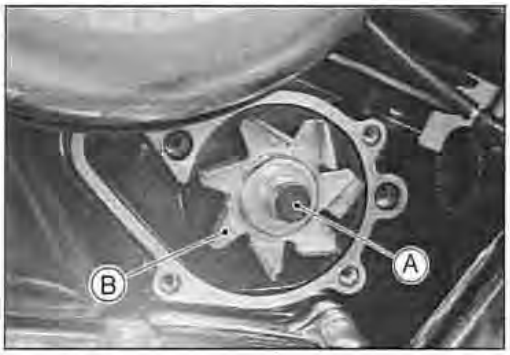

Water Pump Installation

- There are aluminum washers [A] on each side of the bracket [B]. Replace them with new ones when installing.

  Torque - Water Pump Cover Bolts: 9.8 N·m (1.0 kg·m, 87 in·lb)

- Fit the idle adjusting screw [C] onto the bracket.
- Insert the pump inlet hose nutill the hose end [D] touches the Water outlet [H].
  Pump Inlet Step [E]
- Install the clamp [F] so that the clamp end is 10 ~ 13 mm [G] apart from the water outlet. This prevents coolant leakage from the hose end.
- Tighten:

  Torque - Hose Clamp Screws: 2.5 N·m (0.25 kg·m, 22 in·lb)

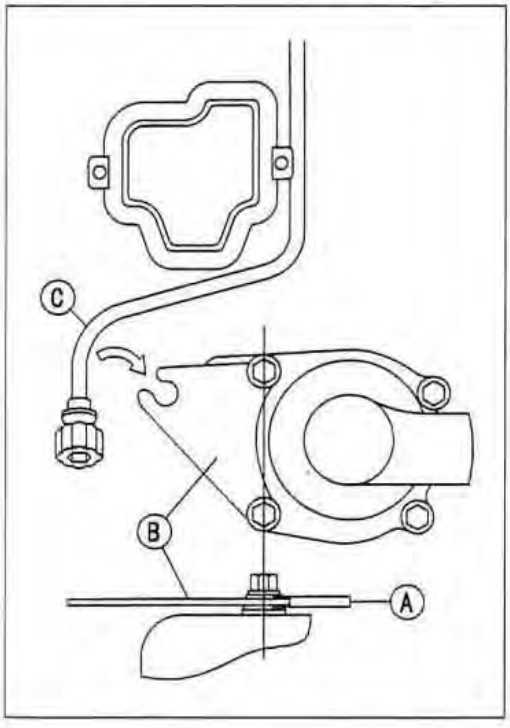

Water Pump

Water Pump Inspection

- Check the water pump drainage outlet hose [A] at the bottom of the water pump for coolant leakage.

★ If the mechanical seal is damaged, the coolant leaks through the seal and drain through the passage. Replace the mechanical seal.

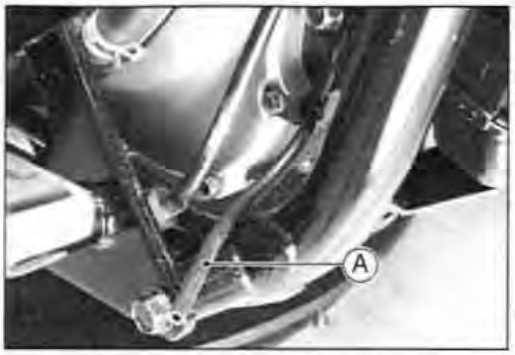

- Visually inspect the impeller [A].

★ If the surface is corroded, or if the blades are damaged, replace the impeller.

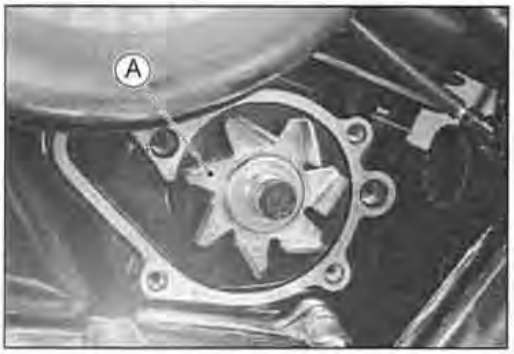

Mechanical Seal Replacement

- Remove the water pump impeller (see Water Pump Removal).
- Pry the mechanical seal flange off with a small chisel [A].
- Pull the mechanical seal out of the right crankcase with needle nose pliers. Discard the mechanical seal.

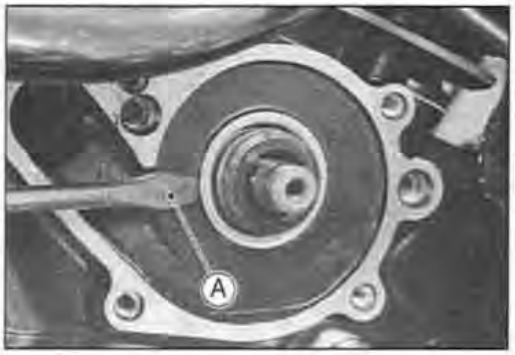

CAUTION

Be careful not to damage the water pump shaft, O-ring, and the inner sealing surface of the crankcase.

NOTE

Since the replacement mechanical seal has an adhesive coated body, do not apply a liquid gasket to the exterior surface of the body.

- Press [A] the mechanical seal [B] by using a suitable 28 mm socket [C] and a bearing driver [D] until its flange touches the step [E]. Gap [F]

Special Tool - Bearing Driver Set: 57001-1129

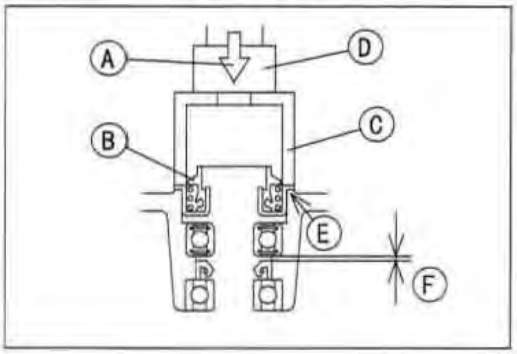

★ If the coolant still leaks through the drainage outlet passage, the seal and ball bearings is probably damaged. Replace the mechanical seal, ball bearings, and oil seal by splitting the crankcase.

- Split the crankcase (see Crankshaft/Transmission chapter).
- Remove the water pump impeller.
- Pull out the water pump shaft from the inside of the right crankcase.
- Take the bearing [A] out of the right crankcase, using the bearing remover.

Special Tools - Bearing Remover Shaft: 57001-1265 [B]
Bearing Remover Head:, ϕ10 × ϕ12: 57001-1266 [C]

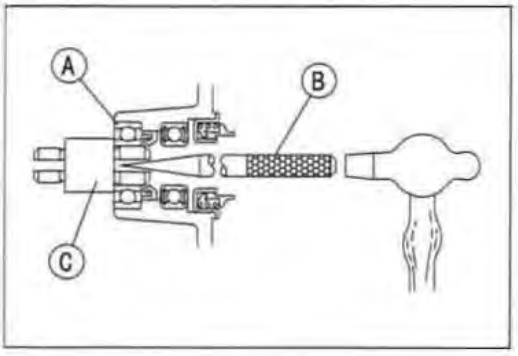

Water Pump

- Using a thin-bladed screwdriver, pry out the oil seal.
- Press out the mechanical seal [A] and ball bearing [B] from the inside of the right crankcase with the bearing driver set [C].

Special Tool - Bearing Driver Set: 57001-1129

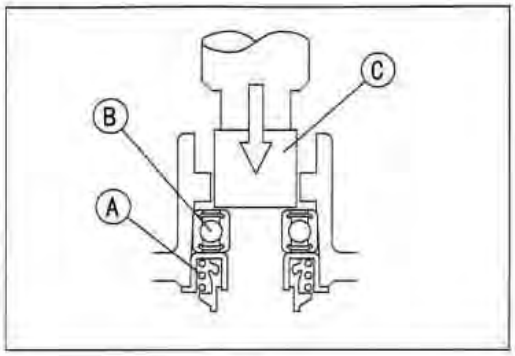

- Be sure to replace the mechanical seal, oil seal, and ball bearings with new ones because these parts will be damaged by removal.
- Apply plenty of high temperature grease to the oil seal lips.
- Apply oil to the outer circumference of the oil seal.
- Press the oil seal [A] into the hole from the inside of the right crankcase with the bearing driver set so that the spring side of the seal lips is toward the inside of the crankcase.

Special Tool - Bearing Driver Set: 57001-1129

- Press the oil seal in until the seal end is even with step [B] of the hole as shown.
- Use the bearing driver which has a larger diameter than the oil seal.

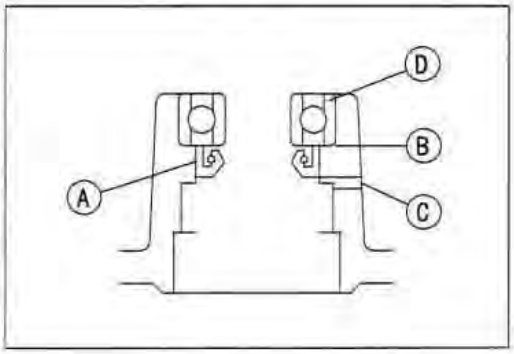

CAUTION

Do not block the coolant drainage outlet passage [C] with the oil seal by pressing it too far into the cover.

- Press in each ball bearing [D] with its manufacturer's mark facing out until it bottoms out.
- Press [A] the mechanical seal [B] by using a suitable 28 mm socket [C] and a bearing driver [D] until its flange touches the step [E].
  Gap [F]
- Install the water pump shaft from the inside of the right crankcase.

Special Tool - Bearing Driver Set: 57001-1129

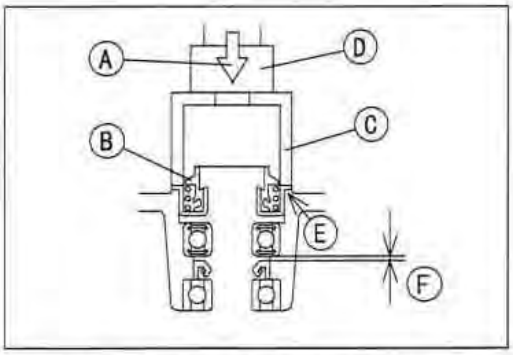

- Clean both sliding surfaces of a new mechanical seal with a high-flash point solvent (e.g. ethyl alcohol), and apply a little coolant to the sliding surface to give the mechanical seal initial lubrication.
- Apply coolant to the surface of the rubber seal [A] and sealing seat [B], and press the rubber seal and sealing seat into the impeller by hand until the seat bottoms out.
- Tighten the water pump impeller bolt by turning the bolt counterclockwise.

Torque - Water Pump Impeller Bolt: 9.8 N·m (1.0 kg·m, 87 in·lb)

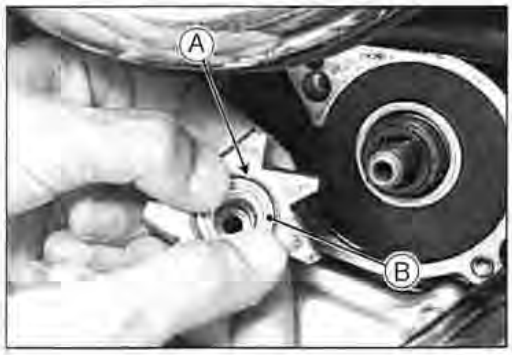

Radiator

⚠ WARNING

The radiator fan is connected directly to the battery. The radiator fan may start even if the ignition switch is off. NEVER TOUCH THE RADIATOR FAN UNTIL THE RADIATOR FAN CONNECTOR IS DISCONNECTED. TOUCHING THE FAN BEFORE THE CONNECTOR IS DISCONNECTED COULD CAUSE INJURY FROM THE FAN BLADES.

Radiator Removal

- Drain the coolant (see this chapter).
- Remove:
  Fuel Tank (see Fuel System chapter)
  Radiator Fan Motor Connector [A]
  Radiator Hoses



- Remove the mounting bolt [A].
- Lift up the radiator to clear the stoppers.
- Remove the radiator.



CAUTION

Do not touch the radiator core. This could damage the radiator fins, resulting in loss of cooling efficiency.

- Remove:
  Radiator Fan Bolts [A]
  Radiator Fan [B]

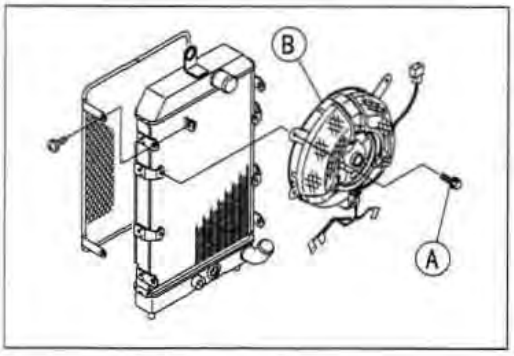

Radiator Installation

- Be sure to install the radiator fan ground lead terminal [A].

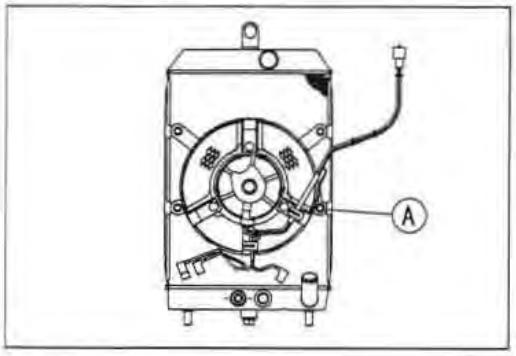

Radiator

Radiator Inspection

- Check the radiator core.

★ If there are obstructions to air flow, remove them.

★ If the corrugated fins [A] are deformed, carefully straighten them.

★ If the air passages of the radiator core are blocked more than **20%** by unremovable obstructions or irreparably deformed fins, replace the radiator with a new one.

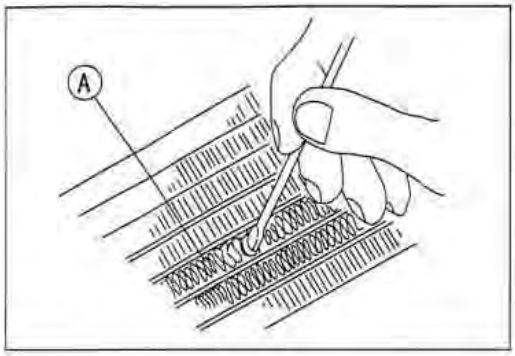

CAUTION

When cleaning the radiator with steam cleaner, be careful of the following to prevent radiator damage.
Keep the steam gun [A] away more than 0.5 m [B] from the radiator core.
Hold the steam gun perpendicular to the core surface.
Run the steam gun following the core fin direction.

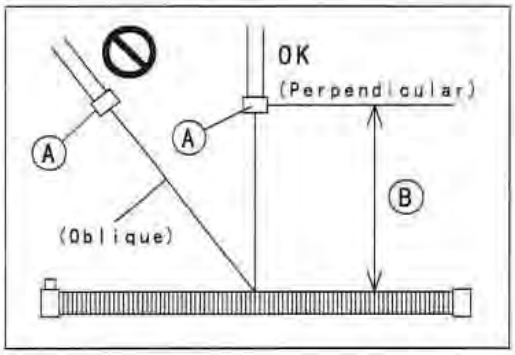

Radiator Cap Inspection

- Check the condition of the top and bottom valve seals of the radiator cap.

★ If any one of them shows visible damage, replace the cap.

Bottom Valve Seal [A]
Top Valve Seal [B]
Valve Spring [C]

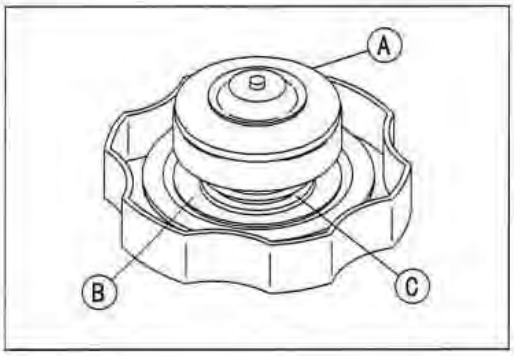

- Install the cap [A] on a cooling system pressure tester [B].

NOTE

Wet the cap sealing surfaces with water or coolant to prevent pressure leaks.

- Watching the pressure gauge, pump the pressure tester to build up the pressure until the relief valve opens: the gauge hand flicks downward. Stop pumping and measure leak time at once. The relief valve must open within the specified range in the table below and the gauge hand must remain within the same range at least 6 seconds.

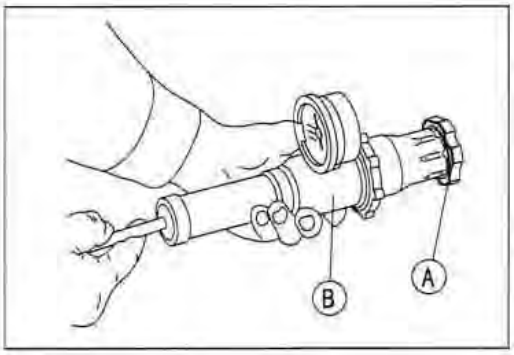

Radiator Cap Relief Pressure
Standard: 93 ~ 123 kPa (0.95 ~ 1.25 kg/cm^2, 14 ~ 18 psi) for 6 seconds

★ If the cap holds too much pressure, or if the cap cannot hold the specified pressure, replace it with a new one.

Radiator

Radiator Filler Neck Inspection

- Check the radiator filler neck for signs of damage.
- Check the condition of the top and bottom sealing seats [A] in the filler neck. They must be smooth and clean for the radiator cap to function properly.

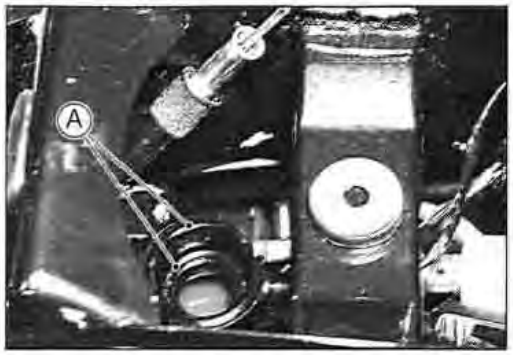

Thermostat

Thermostat Removal

- Remove:
  Surge Tank (see Fuel System chapter)
  Coolant : Drain about 200 mL
  Four Hoses [A]
  Bracket Bolts [B]
- Remove the thermostat housing [C] along with the bracket.

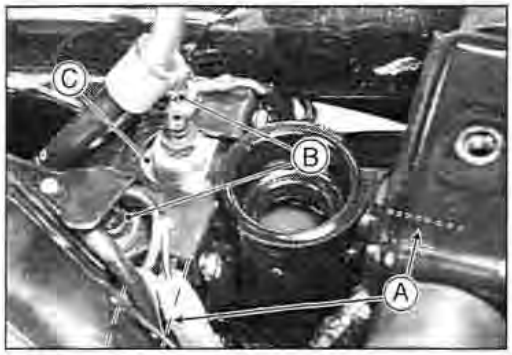

- Remove the screws [A], take off the cap [B], and take out the thermostat.

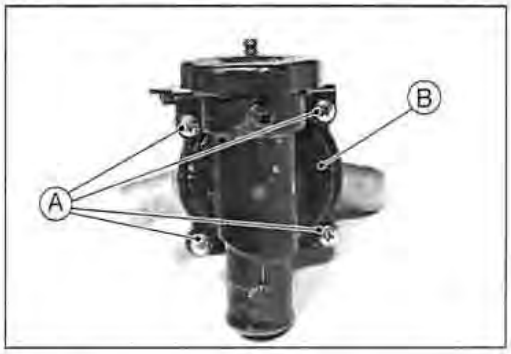

Thermostat Installation

- Install the thermostat [A] in the housing so that the air bleeder hole [B] is on top.
- Install a new O-ring into the housing.
- Fill the radiator with coolant (see Coolant Filling).

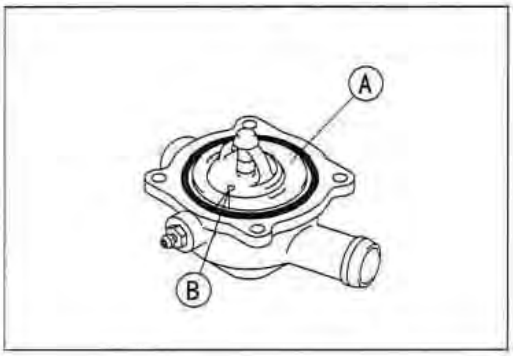

Thermostat Inspection

- Remove the thermostat, and inspect the thermostat valve at room temperature.

★ If the valve is open, replace the valve with a new one.

- To check valve opening temperature, suspend the thermostat in a container of water and raise the temperature of the water.
  The thermostat [A] must be completely submerged and must not touch the container sides or bottom. Suspend an accurate thermometer [B] in the water. It must not touch the container, either.

★ If the measurement is out of the range, replace the thermostat.

Thermostat Valve Opening Temperature
58 ~ 62°C (136 ~ 144°F)

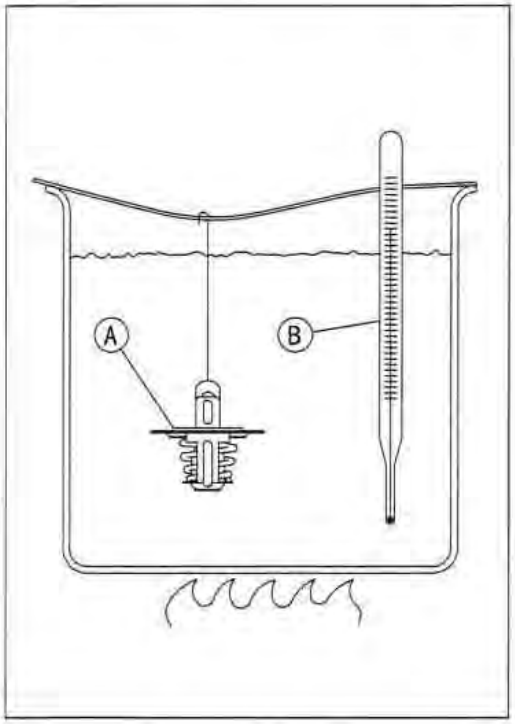

Hose

Hose Installation

- Install the hoses and pipes being careful to follow bending direction or diameter. Avoid sharp bending, kinking, flattening, or twisting.
- Install the clamps [A] as near as possible to the hose end to clear the raised rib or the fitting. This will prevent the hoses from working loose.
- The clamp screws should be positioned correctly to prevent the clamps from contacting anything.

Torque - Hose Clamp Screws: 2.5 N·m (0.25 kg·m, 22 in·lb)

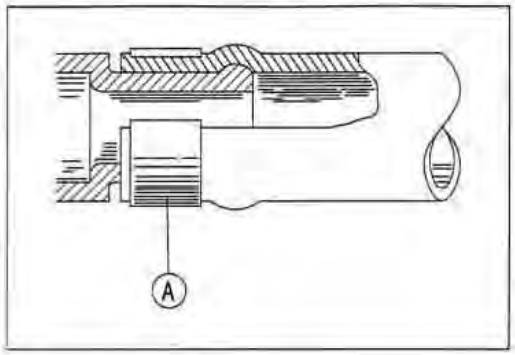

Hose Inspection

- Visually inspect the hoses for signs of deterioration. Squeeze the hoses. A hose should not be hard and brittle, nor should it be soft or swollen.
- Replace any damaged hoses.

Engine Top End

Table of Contents

Exploded View....4-2
Specifications....4-5
Clean Air System....4-8
Air Suction Valve Removal....4-8
Air Suction Valve Installation....4-8
Air Suction Valve Inspection (Periodic Inspection)4-8
Vacuum Switch Valve Removal....4-9
Vacuum Switch Valve Installation....4-9
Vacuum Switch Valve Test....4-9
Clean Air System Hose Inspection....4-10
Camshaft Chain Tensioner....4-11
Removal....4-11
Installation....4-11
Rocker Case Cover....4-13
Removal....4-13
Installation....4-13
Assembly....4-13
Rocker Case....4-14
Removal....4-14
Installation....4-14
Rocker Arm Assembly....4-16
HLA (Hydraulic Lash Adjuster)....4-17
HLA Removal....4-17
HLA Air Bleeding....4-17
HLA Installation....4-17
Inspection....4-17
Camshafts....4-18
Removal....4-18
Installation....4-18
Camshaft Sprocket Installation....4-20
Camshaft/Rocker Case Wear....4-20
Front Camshaft Chain Removal....4-21
Rear Camshaft Chain Removal....4-21
Camshaft Chain Wear....4-21
KACR (Kawasaki Automatic Compression Release)4-22
Removal....4-22
Installation....4-22
Inspection....4-22
Cylinder Head....4-24
Cylinder Compression Measurement....4-24
Removal....4-25
Installation....4-25
Valves....4-26
Valve Clearance Adjustment....4-26
Valve Removal....4-26
Valve Installation....4-26
Valve Guide Removal....4-26
Valve Guide Installation....4-26
Valve-to-Guide Clearance Measurement....4-27
Valve Seat Inspection....4-27
Valve Seat Repair....4-28
Cylinders, Piston....4-32
Cylinder Removal....4-32
Piston Removal....4-32
Cylinder, Piston Installation....4-32
Cylinder Wear....4-34
Piston Wear....4-35
Piston/Cylinder Clearance....4-35
Cylinder Boring and Honing....4-35
Piston Ring, Piston Ring Groove Wear....4-36
Piston Ring Groove Width....4-36
Piston Ring Thickness....4-36
Piston Ring End Gap....4-36
Mufflers....4-37
Front and Rear Exhaust Pipe Removal....4-37
Right Silencer Removal....4-38
Left Silencer Removal....4-38
Chamber Removal....4-38
Muffler Installation....4-38

4-2 ENGINE TOP END

Exploded View

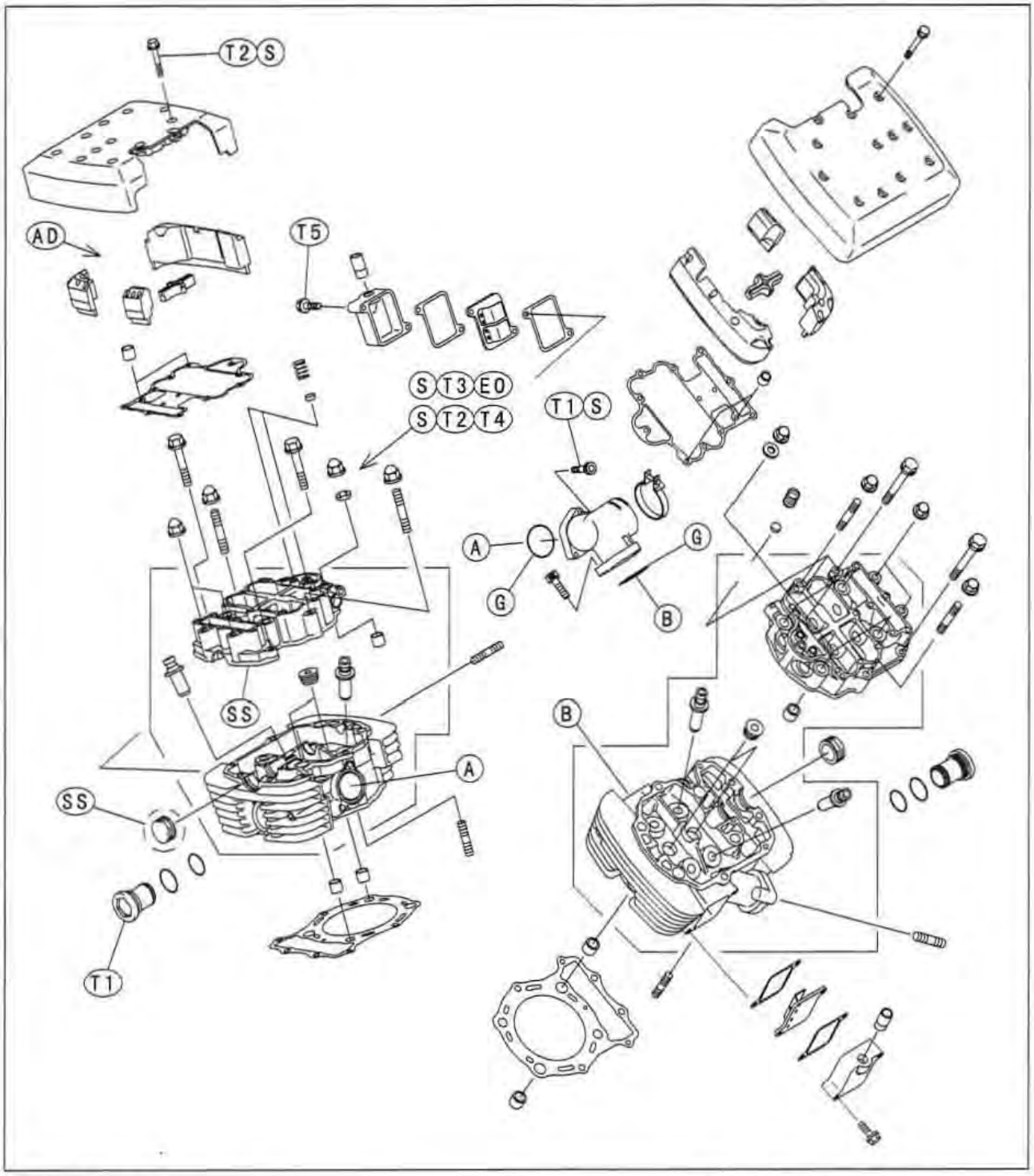

AD: Apply adhesive.
EO: Apply engine oil to the threads and seating surface of 12 mm nuts.
G: Apply grease.
S: Follow the specific tightening sequence.
SS: Apply silicone sealant (Kawasaki Bond: 56019-120).

T1: 12 N·m (1.2 kg·m, 104 in·lb)
T2: 8.8 N·m (0.90 kg·m, 78 in·lb)
T3: 12 mm, 78 N·m (8.0 kg·m, 58 ft·lb)
T4: 8 mm, 25 N·m (2.5 kg·m, 18.0 ft·lb)
T5: 7.4 N·m (0.75 kg·m, 65 in·lb)

Exploded View

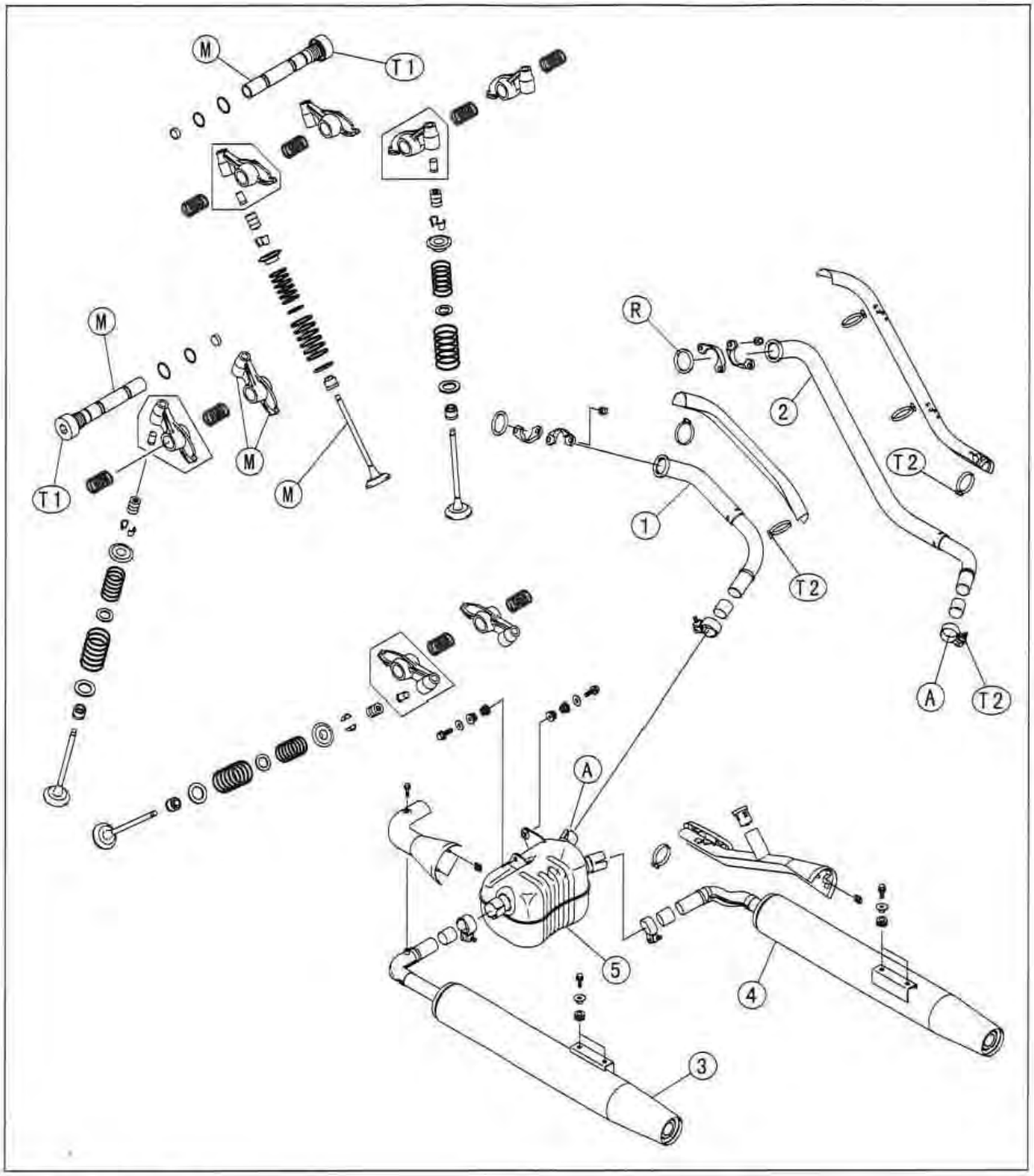

1. Rear Exhaust Pipe
2. Front Exhaust Pipe
3. Left Silencer
4. Right Silencer
5. Chamber

M: Apply molybdemum disulfide grease.
R: Replacement Parts
T1: 25 N·m (2.5 kg·m, 18.0 ft·lb)
T2: 6.9 N·m (0.70 kg·m, 61 in·lb)

Exploded View

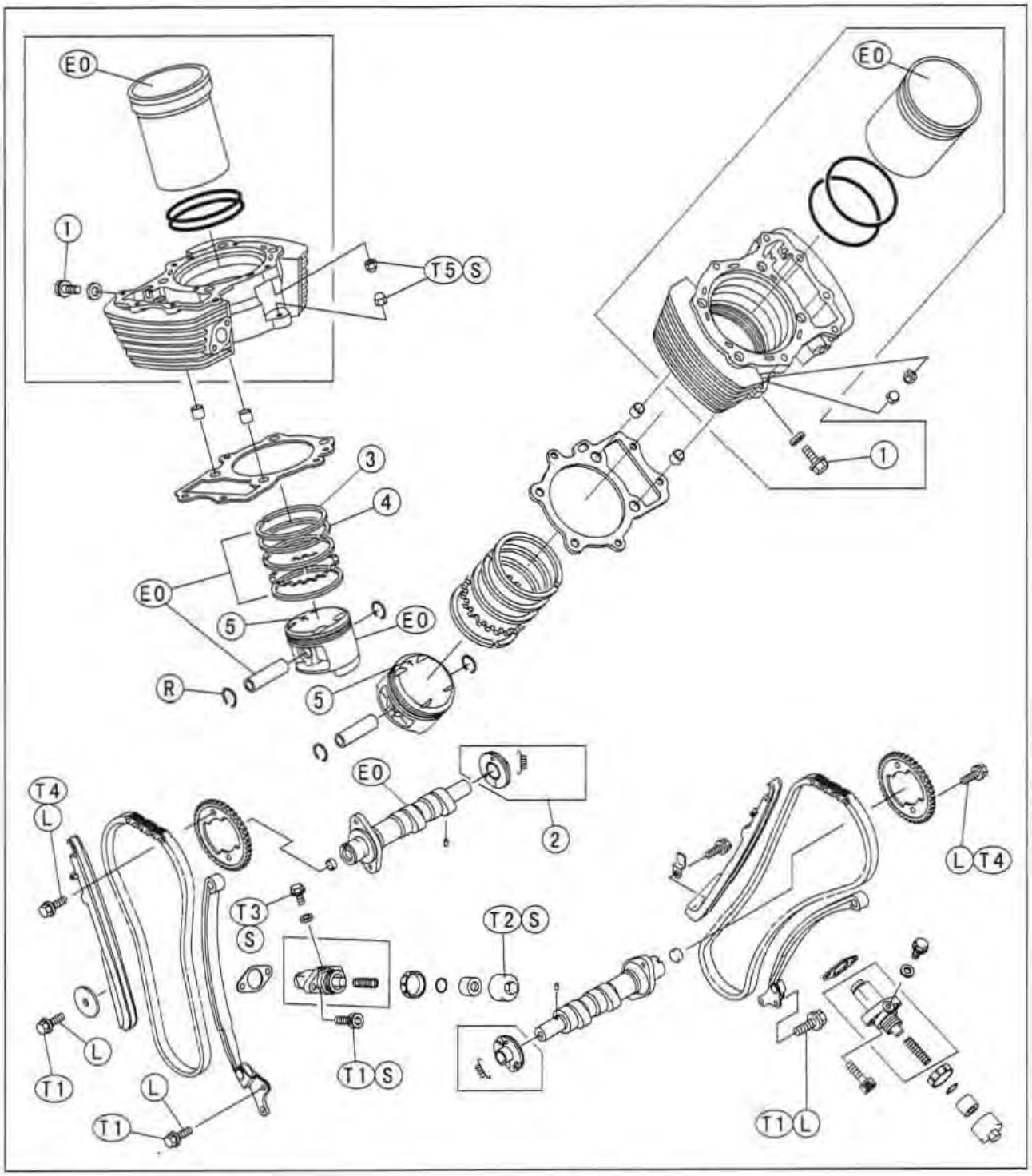

1. Coolant Drain Bolts
2. KACR Unit
3. "R" marked side faces up.
4. "RN" marked side faces up.
5. Arrow points to the front.

EO: Apply engine oil.
L: Apply a non-permanent locking agent.
R: Replacement Parts
S: Follow the specific tightening sequence.
T1: 9.8 N·m (1.0 kg·m, 87 in·lb)
T2: 20 N·m (2.0 kg·m, 14.5 ft·lb)
T3: 4.9 N·m (0.50 kg·m, 43 in·lb)
T4: 15 N·m (1.5 kg·m, 11.0 ft·lb)
T5: 25 N·m (2.5 kg·m, 18.0 ft·lb)

Valves

Valve Clearance Adjustment

NOTE

□ *Since the hydraulic lash adjusters constantly maintain zero clearance, it is not necessary to inspect or adjust the valve clearance.*

Valve Removal

- Remove the cylinder head (see this chapter).
- Swing open the rocker arm.
- Using the valve spring compressor assembly, remove the valve.

Special Tools - Valve Spring Compressor Assembly: 57001-241 [A]
Valve Spring Compressor Adapter, ϕ28.2: 57001-243 [B]

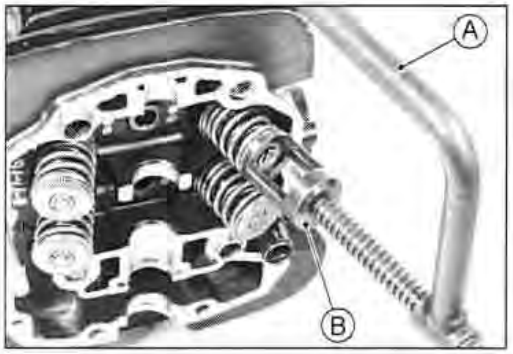

Valve Installation

- Replace the oil seal with a new one.
- Apply a thin coat of molybdenum disulfide grease to the valve stem before valve installation.
- Install the springs so that the closed coil end faces downwards.

Valve Stem [A]
Oil Seal [B]
Spring Seats [C]
Inner Spring [D]
Outer Spring [E]
Retainer [F]
Split Keepers [G]
Closed Coil End [H]

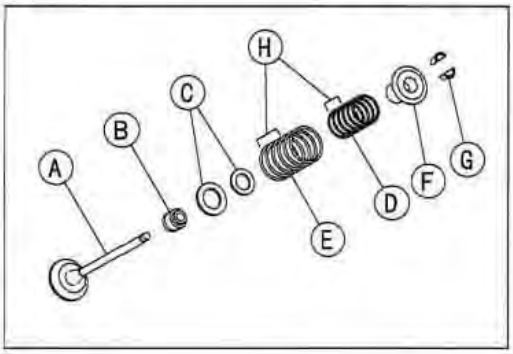

Valve Guide Removal

- Remove:

Valve (see Valve Removal)
Oil Seal
Spring Seat

- Heat the area around the valve guide to 120 ~ 150°C (248 ~ 302°F), and hammer lightly on the valve guide arbor [A] to remove the guide from the top of the head.

CAUTION

Do not heat the cylinder head with a torch. This will warp the cylinder head. Soak the cylinder head in oil and heat the oil.

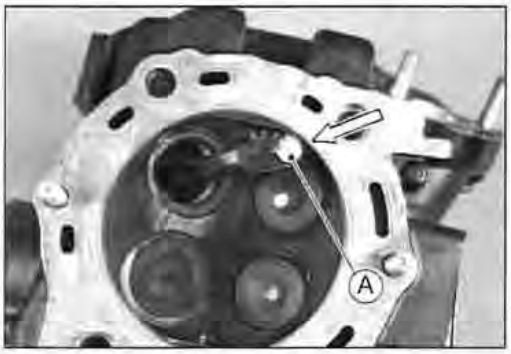

Special Tool - Valve Guide Arbor, ϕ7: 57001-163

Valve Guide Installation

- Apply oil to the valve guide outer surface before installation.
- Heat the area around the valve guide hole to about 120 ~ 150°C (248 ~ 302°F) (see Valve Guide Removal).
- Drive the valve guide in from the top of the head using the valve guide arbor. The flange stops the guide from going in too far.

Special Tool - Valve Guide Arbor, ϕ7: 57001-163

- Ream the valve guide with the valve guide reamer [A] even if the old guide is reused.

Special Tool - Valve Guide Reamer, ϕ7: 57001-162

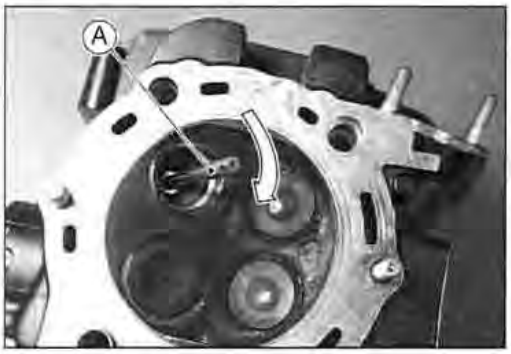

Valves

Valve-to-Guide Clearance Measurement

★ If a small bore gage is not available, inspect the valve guide wear by measuring the valve to valve guide clearance with the wobble method as indicated below.

- Insert a new valve [A] into the guide [B] and set a dial gage against the stem perpendicular to it as close as possible to the cylinder head mating surface.
- Move the stem back and forth [C] to measure valve/valve guide clearance.
- Repeat the measurement in a direction at a right angle (90°) to the first.

★ If the reading exceeds the service limit, replace the guide.

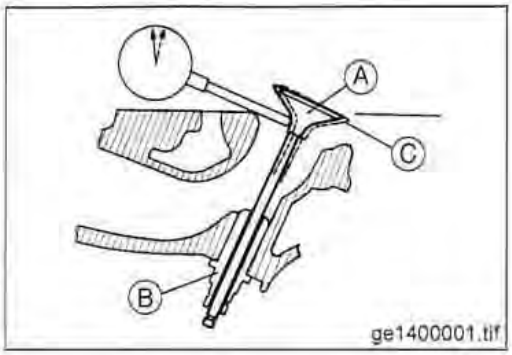

NOTE

The reading is not actual valve/valve guide clearance (extended clearance) because the measuring point is above the guide.

Valve/Valve Guide Clearance (Wobble Method)

	Exhaust	Inlet
Standrd:	0.08 ~ 0.16 mm	0.05 ~ 0.13 mm
Service Limit:	0.30 mm	0.27 mm

Valve Seat Inspection

- Remove the valve (see Valve Removal).
- Check the valve seating surface [A] between the valve [B] and valve seat [C].

Measure the outside diameter [D] of the seating pattern on the valve seat.

★ If the outside diameter is too large or too small, repair the seat (see Seat Repair).

Valve Seating Surface Outside Diameter

Standard:	Exhaust	28.9 ~ 29.1 mm
	Inlet	31.9 ~ 32.1 mm

Measure the seat width [E] of the portion where there is no build-up carbon (white portion) of the valve seat with a vernier caliper.

Good [F]

★ If the width is too wide [G], too narrow [H] or uneven [J], repair the seat (see Valve Seat Repair).

Valve Seating Surface Width

Standard:	Exhaust, Inlet	0.5 ~ 1.0 mm

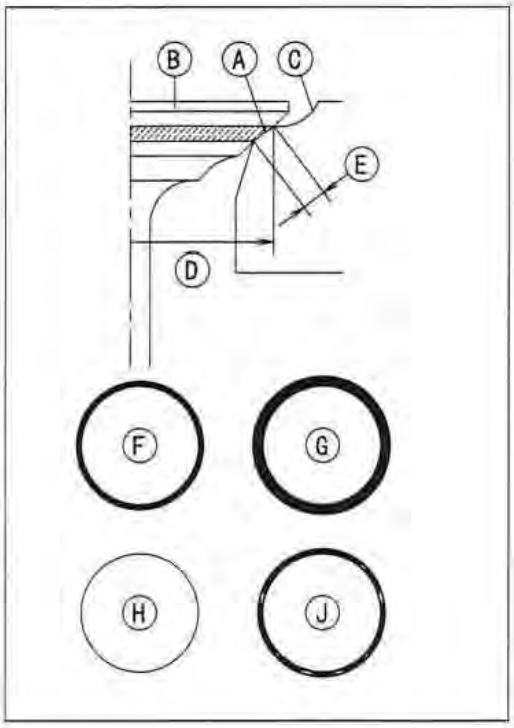

Valves

Valve Seat Repair

● Repair the valve seat with the valve seat cutters [A].

Special Tools - Valve Seat Cutter Holder, φ7: 57001-1126 [B]
Valve Seat Cutter Holder Bar: 57001-1128 [C]

[For Exhaust Valve Seat]
Valve Seat Cutter, 45° – φ32: 57001-1115
Valve Seat Cutter, 32° – φ35: 57001-1121 (or -1199)
Valve Seat Cutter, 55° – φ35: 57001-1247

[For Inlet Valve Seat]
Valve Seat Cutter, 45° – φ35: 57001-1116
Valve Seat Cutter, 32° – φ35: 57001-1121 (or -1199)
Valve Seat Cutter, 55° – φ35: 57001-1247

★ If the manufacturer's instructions are not available, use the following procedure.

Seat Cutter Operation Care:

1. This valve seat cutter is developed to grind the valve for repair. Therefore the cutter must not be used for other purposes than seat repair.
2. Do not drop or shock the valve seat cutter, or the diamond particles may fall off.
3. Do not fail to apply engine oil to the valve seat cutter before grinding the seat surface. Also wash off ground particles sticking to the cutter with washing oil.

CAUTION

Do not use a wire brush to remove the metal particles from the cutter. It will take off the diamond particles.

4. Setting the valve seat cutter holder in position, operate the cutter in one hand. Do not apply too much force to the diamond portion.

NOTE

○ *Prior to grinding, apply engine oil to the cutter and during the operation, wash off any ground particles sticking to the cutter with washing oil.*

5. After use, wash it with washing oil and apply thin layer of engine oil before storing.

Marks Stamped on the Cutter:

The marks stamped on the back of the cutter [A] represent the following.

55° ..... Cutter Angle [B]
37.5 ..... Outer Diameter of Cutter [C]

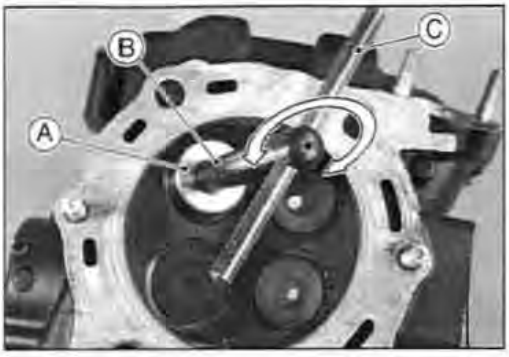

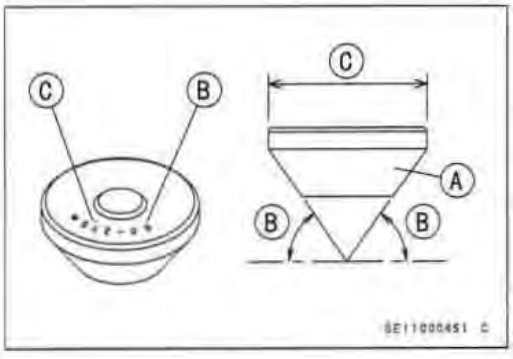

Valves

Operating Procedures:
- Clean the seat area carefully.
- Coat the seat with machinist's dye.
- Fit a 45° cutter into the holder and slide it into the valve guide.
- Press down lightly on the handle and turn it right or left. Grind the seating surface only until it is smooth.

CAUTION

Do not grind the seat too much. Overgrinding will sink the valve into the head. If the valve sinks too far into the head, it will make HLA operation useless, and the cylinder head must be replaced.

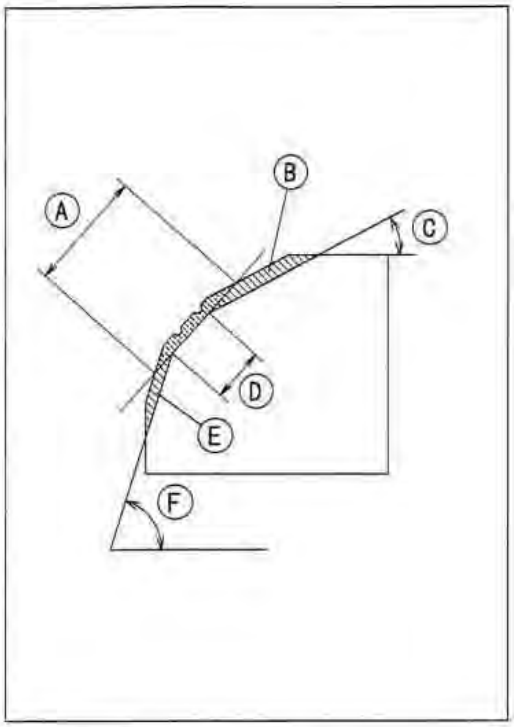

Widened Width [A] of engagement by machining with 45° cutter
Ground Volume [B] by 32° cutter
32° [C]
Correct Width [D]
Ground Volume [E] by 55° cutter
55° [F]

- Measure the outside diameter of the seating surface with a vernier caliper.

★ If the outside diameter of the seating surface is too small, repeat the 45° grind [A] until the diameter is within the specified range.
Original Seating Surface [B]

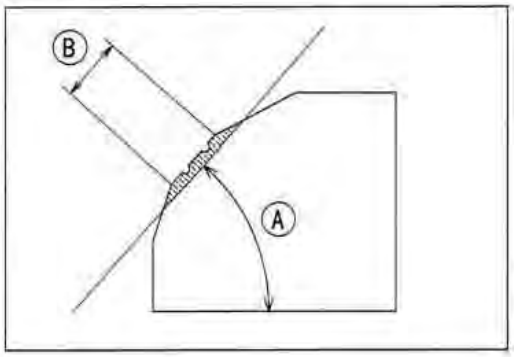

NOTE

- *Remove all pittings or flaws from 45° ground surface.*
- *After grinding with 45° cutter, apply thin coat of machinist's dye to seating surface. This makes seating surface distinct and 32° and 55° grinding operation easier.*
- *When the valve guide is replaced, be sure to grind with 45° cutter for centering and good contact.*

★ If the outside diameter of the seating surface is too large, make the 32° grind described below.

★ If the outside diameter [A] of the seating surface is within the specified range, measure the seat width as described below.

- Grind the seat at a 32° angle [B] until the seat O.D. is within the specified range.

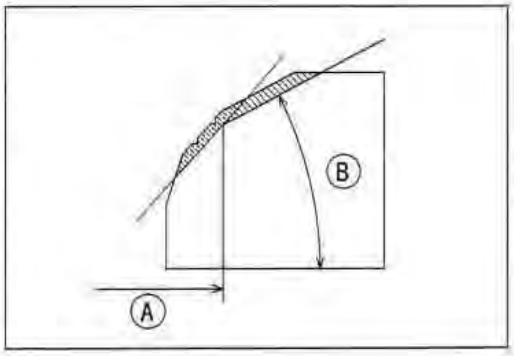

Valves

- To make the 32° grind, fit a 32° cutter into the holder, and slide it into the valve guide.
- Turn the holder one turn at a time while pressing down very lightly. Check the seat after each turn.

CAUTION

The 32° cutter removes material very quickly. Check the seat outside diameter frequently to prevent overgrinding.

- After making the 32° grind, return to the seat O.D. measurement step above.

● To measure the seat width, use a vernier caliper to measure the width of the 45° angle portion of the seat at several places around the seat.

★ If the seat width is too narrow, repeat the 45° grind until the seat is slightly too wide, and then return to the seat O.D. measurement step above.

★ If the seat width is too wide, make the 55° grind described below.

★ If the seat width is within the specified range, lap the valve to the seat as described below.

● Grind the seat at a 55° angle [A] until the seat width is within the specified range.

- To make the 55° grind, fit 55° cutter into the holder, and slide it into the valve guide.
- Turn the holder, while pressing down lightly.
- After making the 55° grind, return to the seat width measurement step above.

Correct Width [B]

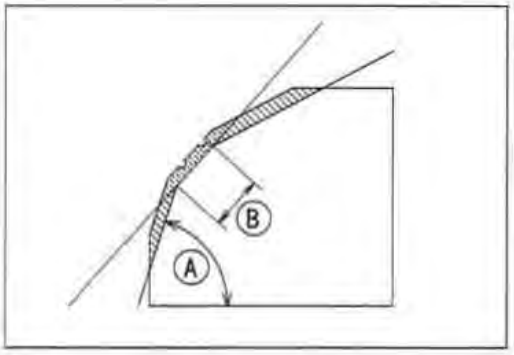

● Lap the valve to the seat, once the seat width and O.D. are within the ranges specified above.

- Put a little coarse grinding compound on the face of the valve in a number of places around the valve head.
- Spin the valve against the seat until the grinding compound produces a smooth, matched surface on both the seat and the valve.
- Repeat the process with a fine grinding compound.

Lapper [A]
Valve Seat [B]
Valve [C]

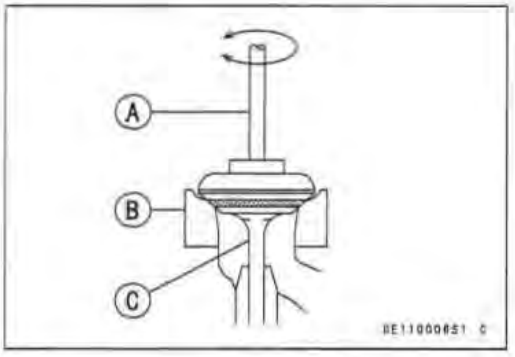

● The seating area should be marked about in the middle of the valve face.

★ If the seat area is not in the right place in the valve, check to be sure the valve is the correct part. If it is, it may have been refaced too much; replace it.

● Be sure to remove all grinding compound before assembly.

Valves

Valve Seat Repair

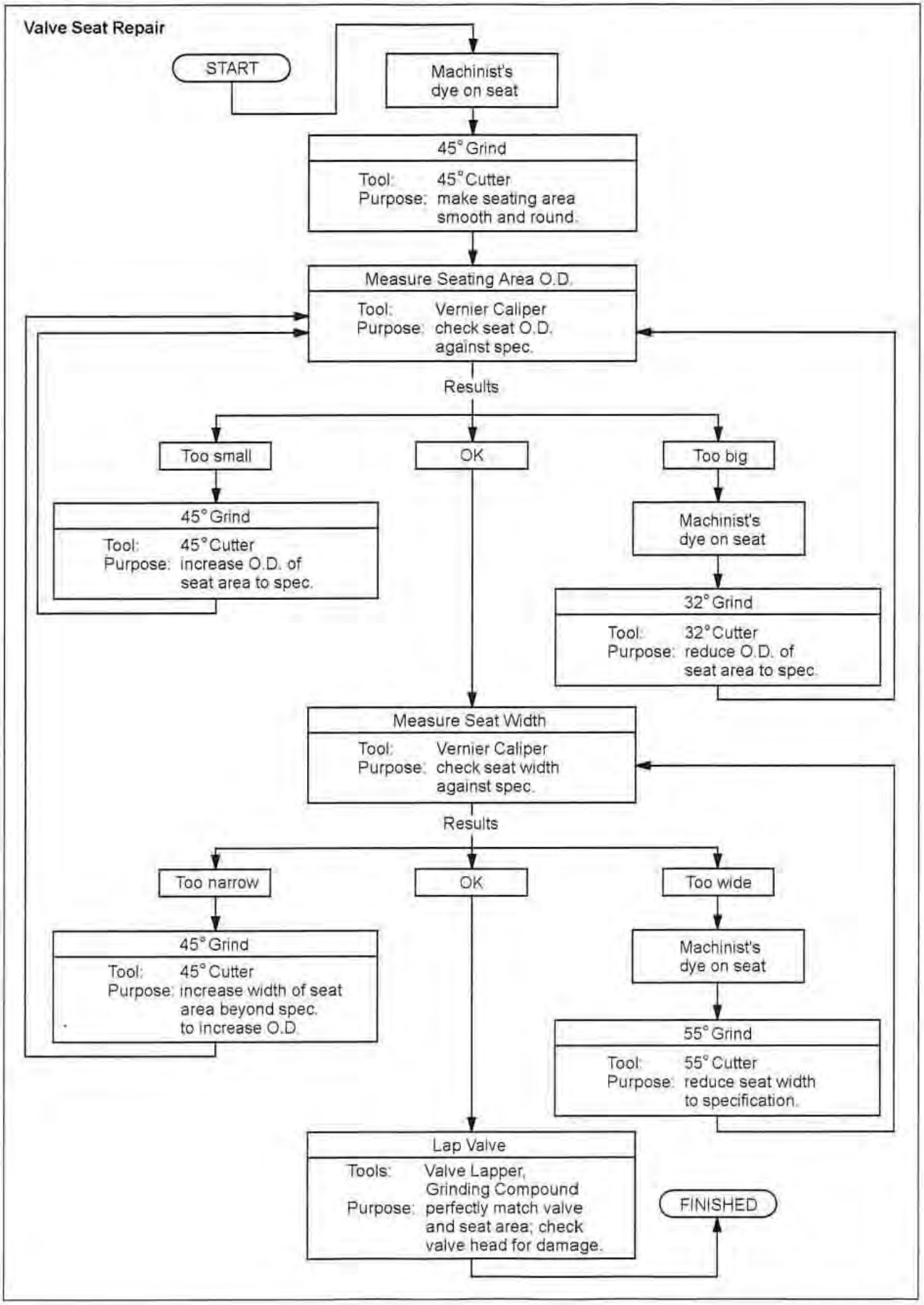

Cylinders, Piston

Cylinder Removal

- Remove the cylinder head (see this chapter).
- Pull out the front camshaft chain guide [A].
- Remove the cylinder nuts [B].
- Tap lightly up the cylinder with a plastic mallet to separate from the crankcase.
- Remove the cylinder base gasket.

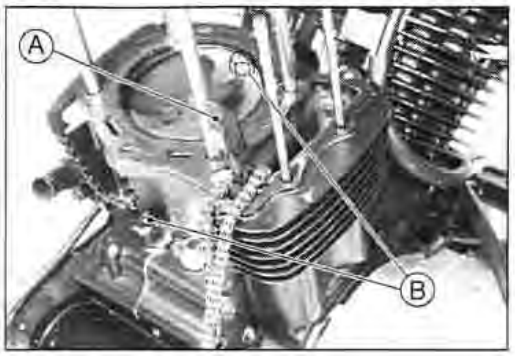

Piston Removal

- Remove the cylinder block (see this chapter).
- Place a clean cloth under the pistons and remove the piston pin snap rings [A] from the outside of each piston.

CAUTION

Do not reuse snap rings, as removal weakens and deforms them. They could fall out and score the cylinder wall.

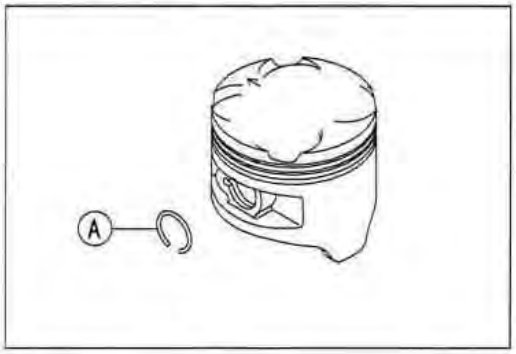

- Using the piston pin puller assembly (special tool), remove the piston pins.

Special Tools - Piston Pin Puller Assembly [A]: 57001-910
Piston Pin Puller Adapter [B]: 57001-1211

- Remove the piston.

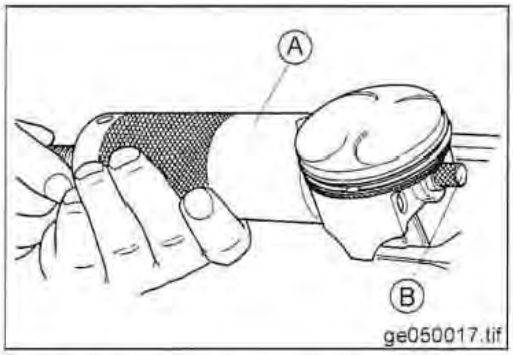

- Carefully spread the ring opening with your thumbs and then push up on the opposite side of the ring [A] to remove it.
- Remove the 3-piece oil ring with your thumbs in the same manner.

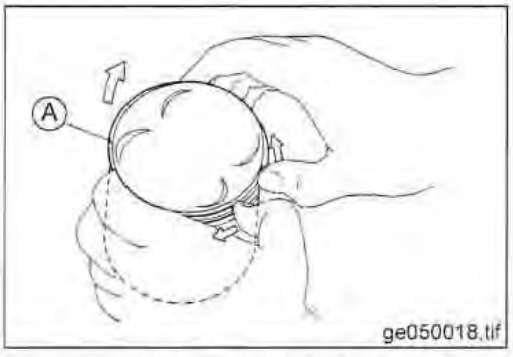

Cylinder, Piston Installation

NOTE

If a new piston or cylinder is used, check piston to cylinder clearance (see Piston/Cylinder Clearance), and use new piston ring.

- Replace the cylinder base gasket [A] with a new one, and install the gaskets aligning the holes with the crankcase water passages [B].
- Be sure to install the dowel pins [C].

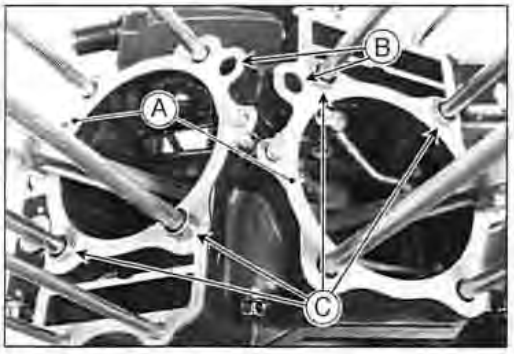

Cylinders, Piston

The front chain guide for the front cylinder has an **F** mark [A] and the front chain guide for the rear cylinder has an **R** mark [B]. Be careful not to mix up these chain guides since the chain guide for the rear cylinder is longer.

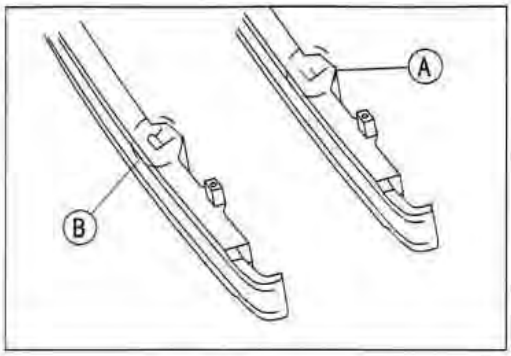

The front cylinder [A] has an **F** mark and the rear cylinder [B] has an **R** mark. Be careful not to mix them up.
Front [C]

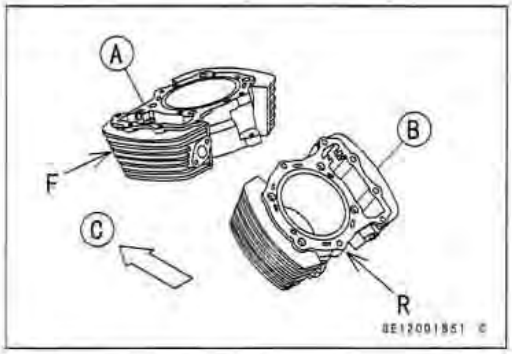

NOTE

The oil ring rails have no "top" or "bottom".

- Install the oil ring expander [A] in the bottom piston ring groove so the ends [B] butt together.
- Install the oil ring steel rails, one above the expander and one below it.

Spread the rail with your thumbs, but only enough to fit the rail over the piston.
Release the rail into the bottom piston ring groove.

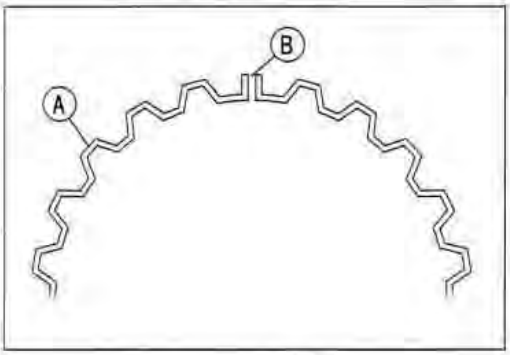

- Do not mix up the top ring and second ring.
- Install the top ring [A] so that the "**R**" mark [B] faces up.
- Install the second ring [C] so that the "**RN**" mark [D] faces up.

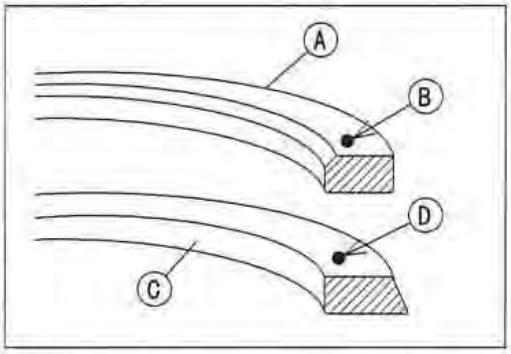

- The piston ring openings must be positioned as shown in the figure. The openings of the oil ring steel rails must be about 30 ~ 45° [F] of angle from the opening of the top ring.

Top Ring [A]
Second Ring [B]
Oil Ring Steel Rails [C]
Oil Ring Expander [D]
Arrow [E]
Opening Positions [G]

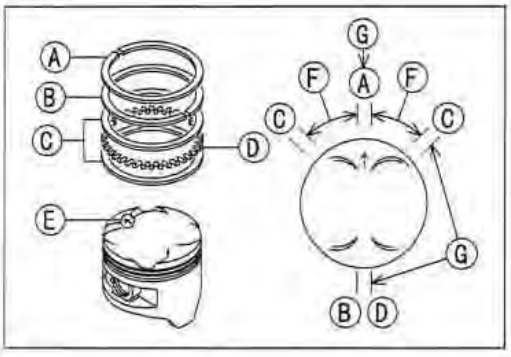

Cylinders, Piston

● The arrow [A] on each piston head must point forward [B].

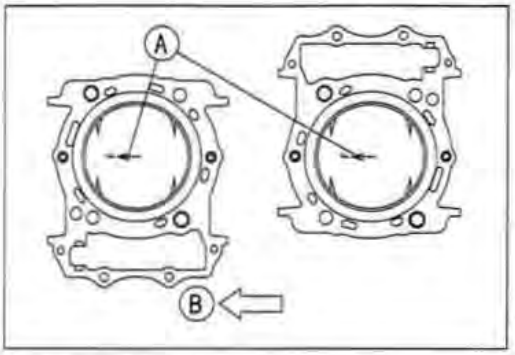

● Fit a new piston pin snap ring into the side of the piston so that the ring opening [A] does not coincide with the slit [B] of the piston pin hole.
○ When installing the piston pin snap ring, compress it only enough to install it and no more.
● Apply engine oil to the cylinder bore, piston ring, and piston skirt.
● Install the rear cylinder, first.
○ Position the rear piston at TDC.

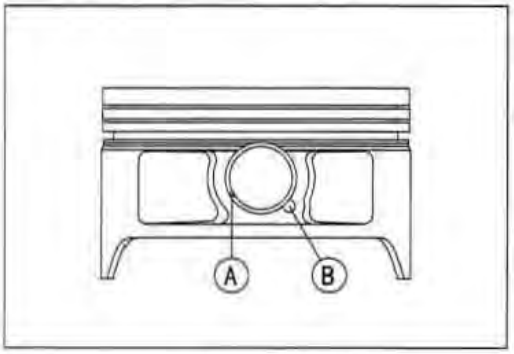

● Using the piston ring compressor assembly [A] with the chamfered side [B] upward, install the cylinder block [C].

Special Tools - Piston Ring Compressor Grip: 57001-1095
Piston Ring Compressor Belt, ϕ95 ~ ϕ108: 57001-1358

● Install the front cylinder in the same way.
○ Position the front piston at TDC.
○ Tighten the cylinder nuts temporarily (These nuts are tightened to the specified torque after installing rocker case).

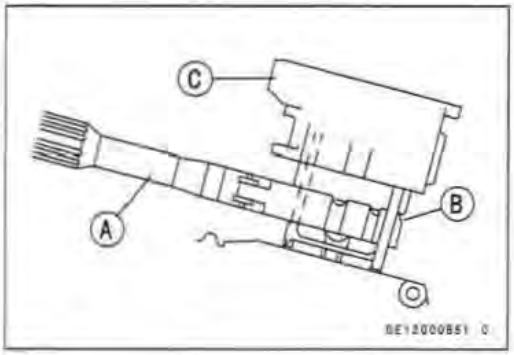

Cylinder Wear

● Since there is a difference in cylinder wear in different directions, take a side-to-side and a front-to-back measurement at each of the three locations (total of six measurements) shown in the figure.
★ If any of the cylinder inside diameter measurements exceeds the service limit, replace the cylinder.
10 mm [A]
70 mm [B]
20 mm [C]

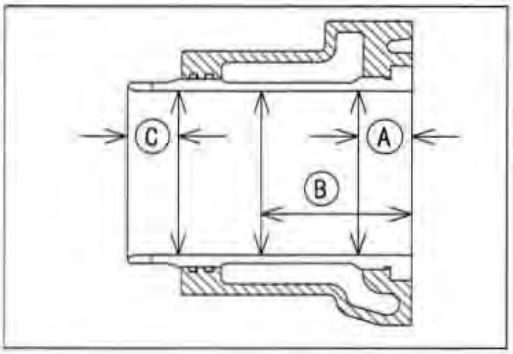

Cylinder Inside Diameter

Standard:	**102.000 ~ 102.012 mm, and less than 0.01mm difference between any two measurements.**
Service Limit:	**102.10 mm, or more than 0.05 mm difference between any two measurements.**

Cylinders, Piston

Piston Wear

- Measure the outside diameter [A] of each piston 5 mm [B] up from the bottom of the piston at a right angle to the direction of the piston pin.

★ If the measurement is under service limit, replace the piston.

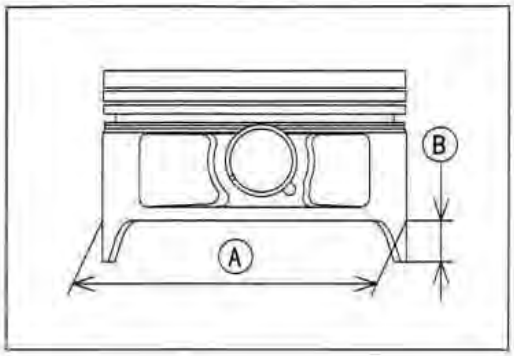

Piston Diameter

Standard:	**101.942 ~ 101.957 mm**
Service Limit:	**101.79 mm**

Piston/Cylinder Clearance

- Subtract the piston diameter from the cylinder inside diameter to get the piston/cylinder clearance.

Piston/Cylinder Clearance

Standard:	**0.043 ~ 0.070 mm**

★ If the piston/cylinder clearance is less than the specified range, use a smaller piston or increase the cylinder inside diameter by honing.

★ If the piston/cylinder clearance is greater than specified range, use a larger piston.

★ If only a piston is replaced, the clearance may exceed the standard slightly. But it must not to be less than the minimum in order to avoid piston seizure.

Cylinder Boring and Honing

There is an oversize piston available. The oversize piston requires oversize rings.

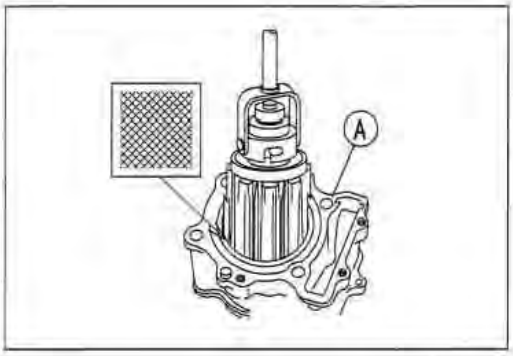

Oversize Piston and Rings

0.5 mm Oversize

- Before boring a cylinder [A], first measure the exact diameter of the oversize piston, and then, according to the standard clearance in the Specifications, determine the rebore diameter. However, if the amount of boring necessary would make the inside diameter greater than **1.0 mm**, the cylinder block must be replaced.

Cylinder inside diameter must not vary more than **0.01 mm** at any point.

Be wary of measurements taken immediately after boring since the heat affects cylinder diameter.

In the case of rebored cylinder and oversize piston, the service limit for the cylinder is the diameter that the cylinder was bored to plus **0.1 mm** and the service limit for the piston is the oversize piston original diameter minus **0.15 mm**. If the exact figure for the rebored diameter is unknown, it can be roughly determined by measuring the diameter at the base of the cylinder.

Cylinders, Piston

Piston Ring, Piston Ring Groove Wear

- Check for uneven groove wear by inspecting the ring seating.

★ The rings should fit perfectly parallel to groove surfaces. If not, replace the piston and all the piston rings.

- With the piston rings in their grooves, make several measurements with a thickness gauge [A] to determine piston ring/groove clearance.

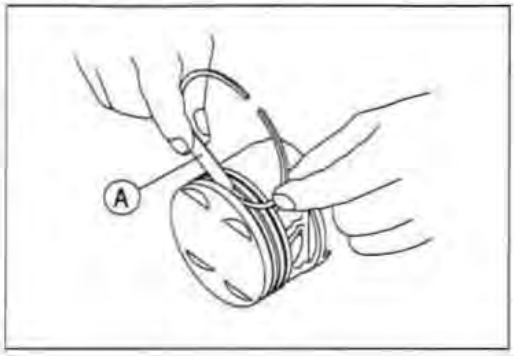

Piston Ring/Groove Clearance

	Standard:	Service Limit:
Top	0.035 ~ 0.070 mm	0.17 mm
Second	0.02 ~ 0.06 mm	0.16 mm

★ If the piston ring groove clearance is greater than the service limit, measure the ring thickness and groove width as follows to decide whether to replace the rings, the piston or both.

Piston Ring Groove Width

- Measure the piston ring groove width.

Use a vernier caliper at several points around the piston.

Piston Ring Groove Width

	Standard	Service Limit
Top	1.025 ~ 1.040 mm	1.12 mm
Second	1.21 ~ 1.23 mm	1.31 mm

★ If the width of any of the two grooves is wider than the service limit at any point, replace the piston.

Piston Ring Thickness

- Measure the piston ring thickness.

Use a micrometer to measure at several points around the ring.

Piston Ring Thickness

	Standard	Service Limit
Top	0.97 ~ 0.99 mm	0.9 mm
Second	1.17 ~ 1.19 mm	1.10 mm

★ If any of the measurements is less than the service limit on either of the rings, replace all the rings.

NOTE

When using new rings in a used piston, check for uneven groove wear. The rings should fit perfectly parallel to the groove sides. If not, replace the piston.

Piston Ring End Gap

- Place the piston ring [A] inside the cylinder, using the piston to locate the ring squarely in place. Set it close to the bottom of the cylinder, where cylinder wear is low.
- Measure the gap [B] between the ends of the ring with a thickness gauge.

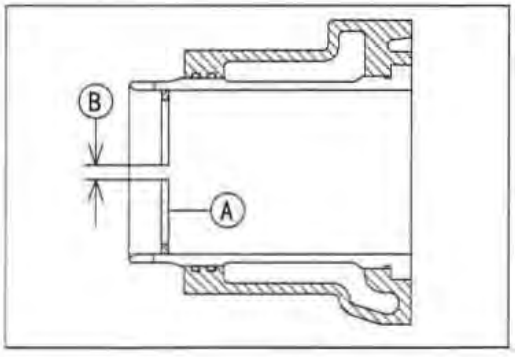

Piston Ring End Gap

	Standard	Service Limit
Top	0.30 ~ 0.40 mm	0.70 mm
Second	0.40 ~ 0.55 mm	0.85 mm
Oil	0.3 ~ 0.9 mm	1.2 mm

★ If the end gap of either ring is greater than the service limit, replace all the rings.

Mufflers

⚠ WARNING

To avoid a serious burn, do not remove the mufflers when the engine is still hot. Wait until the mufflers cool down.

Front and Rear Exhaust Pipe Removal

- Loosen the clamp bolts [A] on the rear exhaust pipe cover [B].
- Detach the upper clamp [C] by sliding it up.
- Detach the lower clamp [D] by sliding it up.
- Remove the rear exhaust pipe cover.
  Front [E]

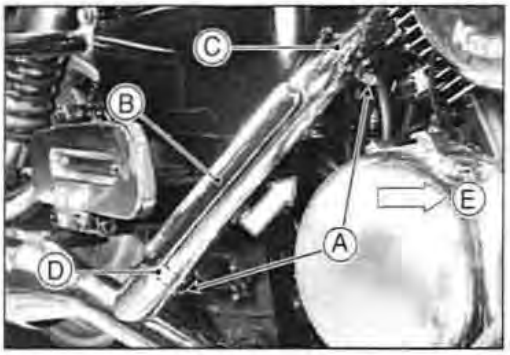

- Loosen the clamp bolt [A] and remove the lower cover [B].



- Remove the right chamber bolt [A].
- Remove the front exhaust pipe holder nuts [B].
- Loosen the front exhaust pipe clamp bolt [C].
- Take off the front exhaust pipe [D].

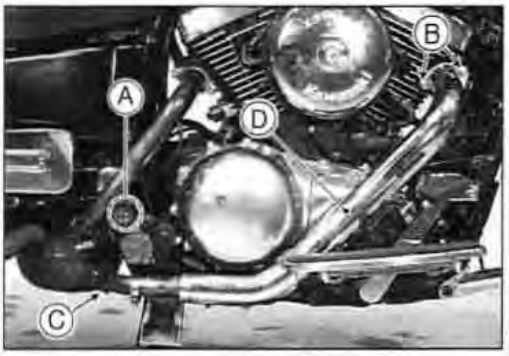

- Remove the rear exhaust pipe holder nuts [A].
- Loosen the rear exhaust pipe clamp bolt [B].
- Take off the rear exhaust pipe [C].

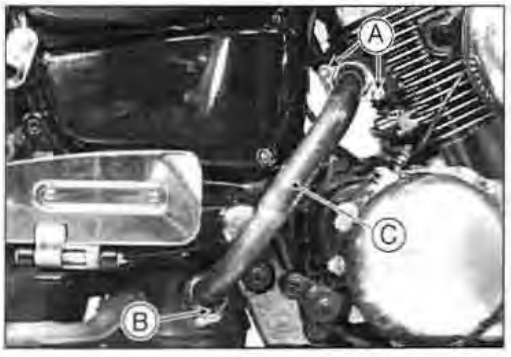

Mufflers

Right Silencer Removal

- Remove:
  Right Saddlebag (see Frame chapter)
  Rear Exhaust Pipe Cover (see above)
  Silencer Bolts [A]
  Silencer Clamp Bolt [B]
- Remove the right silencer [C].

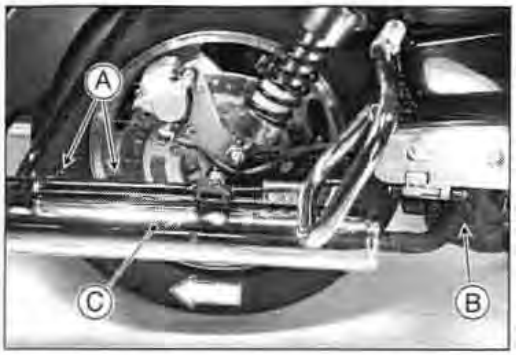

Left Silencer Removal

- Remove:
  Left Saddlebag (see Frame chapter)
  Silencer Bolts [A]
  Silencer Clamp Bolt [B]
- Remove the left silencer [C].

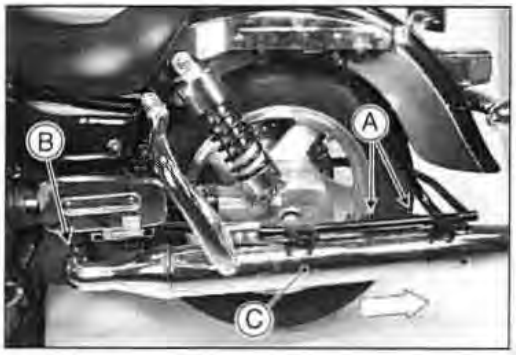

Chamber Removal

- Remove:
  Front and rear exhaust pipes
  Right and Left Silencers (see this chapter)
  Right and Left Chamber Bolts [A]
- Take out the chamber [B].

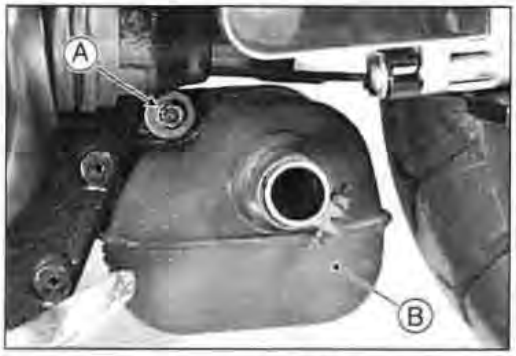

Muffler Installation

- Replace the exhaust pipe holder gasket with new ones.
- Tighten the exhaust pipe cover clamp screws [A] with its head inclined at 50° to horizontal as shown. This prevents the screw from touching ground when banking.
  Exhaust Pipe [B]

  Torque - Exhaust Pipe Cover Clamp Screws: 6.9 N·m (0.70 kg·m, 61 in·lb)
- First, tighten all the bolts and nuts to a snug fit.
- Secondary, tighten the exhaust pipe holder nuts evenly to avoid exhaust leakage.
- Finally, tighten the rest of the mounting bolts and clamp bolts securely.
- Thoroughly warm up the engine, wait until the engine cools down, and retighten all the clamp bolts.

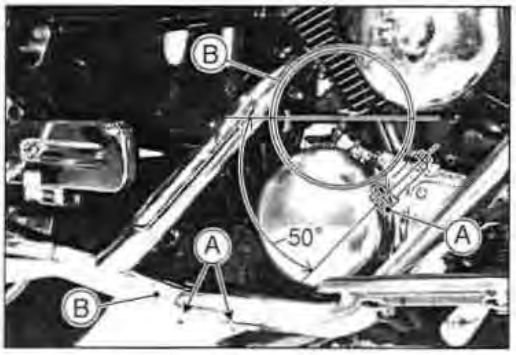

Clutch

Table of Contents

Exploded View 5-2
Specifications 5-4
Clutch Lever 5-5
  Position Adjustment 5-5
Clutch Fluid 5-6
  Fluid Level Inspection 5-6
  Clutch Fluid Changing 5-6
  Bleeding the Clutch Line 5-7
Clutch Master Cylinder 5-8
  Clutch Master Cylinder Removal 5-8
  Clutch Master Cylinder Installation 5-8
  Clutch Master Cylinder Disassembly 5-9
  Clutch Master Cylinder Assembly 5-9
  Clutch Master Cylinder Inspection 5-9
Clutch Slave Cylinder 5-10
  Removal 5-10
  Installation 5-10
  Disassembly 5-11
  Assembly 5-11
Clutch 5-12
  Clutch Cover Removal 5-12
  Clutch Removal 5-12
  Clutch Installation 5-13
  Clutch Inner Hub Disassembly 5-14
  Spring Plate Free Play Measurement 5-15
  Clutch Plate Replacement 5-16
  Friction Plate Wear, Damage Inspection 5-16
  Friction and Steel Plate Warp 5-16
  Clutch Spring Height Measurement 5-17
  Clutch Housing Finger Inspection 5-17
  Clutch Hub Spline Inspection 5-17
  Cam Damper Inspection 5-17

Exploded View

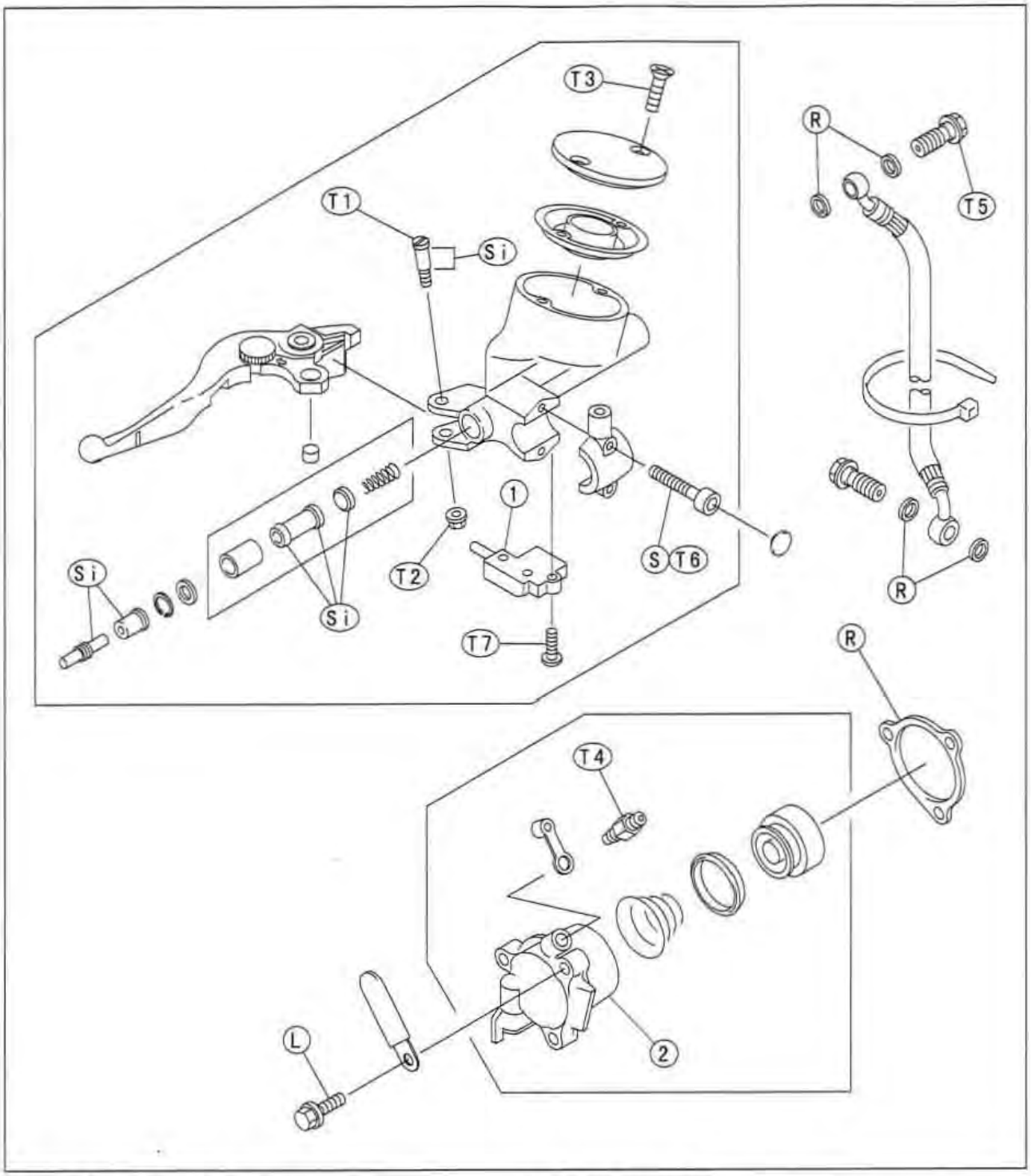

T1: 1.0 N·m (0.10 kg·m, 9 in·lb)
T2: 5.9 N·m (0.60 kg·m, 52 in·lb)
T3: 1.5 N·m (0.15 kg·m, 13 in·lb)
T4: 7.8 N·m (0.80 kg·m, 69 in·lb)
T5: 25 N·m (2.5 kg·m, 18.0 ft·lb)
T6: 9.8 N·m (1.0 kg·m, 87 in·lb)
T7: 1.2 N·m (0.12 kg·m, 10 in·lb)
T8: 4.9 N·m (0.50 kg·m, 43 in·lb)
T9: 145 N·m (15.0 kg·m, 110 ft·lb)

EO: Apply engine oil.
L: Apply a non-permanent locking agent.
R: Replacement Parts
S: Follow the specific tightening sequence.
Si: Apply silicone grease, or PBC grease.
1. Starter Lockout Switch
2. Clutch Slave Cylinder

Exploded View

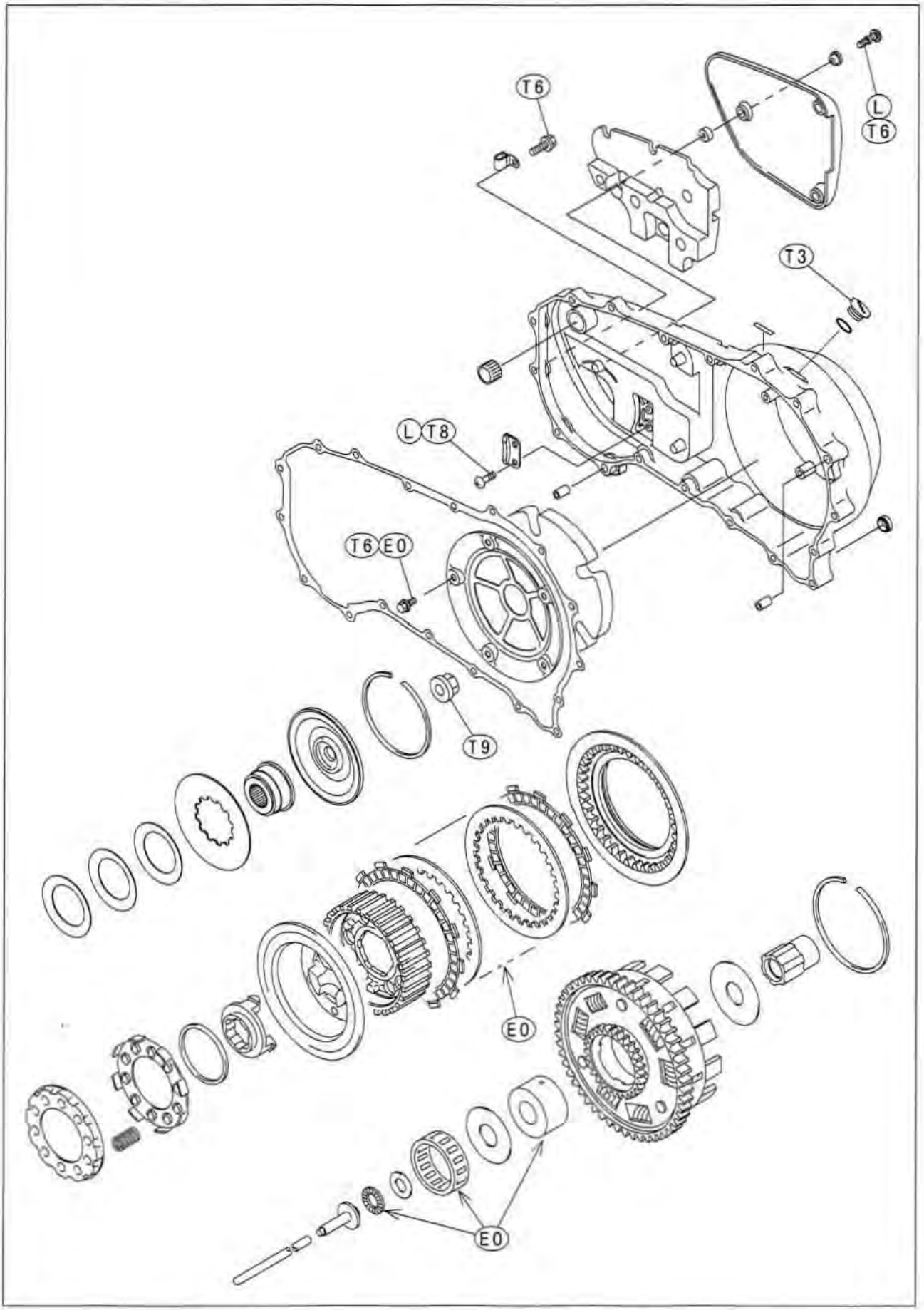

5-4 CLUTCH

Specifications

Item	Standard	Service Limit
Clutch Fluid		
Grade	D.O.T. 4	– – –
Brand (recommended)	Castrol Girling-Universal	
	Castrol GT (LMA)	
	Castrol Disc Brake Fluid	
	Check Shock Premium Heavy Duty	
Clutch Lever Position	No. 1 (to suit rider)	5-way adjustable
Clutch Lever Free Play	Non-adjustable	– – –
Clutch		
Clutch spring free height	4.3 mm	4 mm
Spring plate free play	0.30 ~ 1.30 mm	– – –
Friction and steel plate warp	0.2 mm or less	0.3 mm

Special Tools - Inside Circlip Pliers: 57001-143
Bearing Driver Set: 57001-129

Clutch Lever

The adjuster has 5 positions so that the clutch lever position can be adjusted to suit the operator's hand.

Position Adjustment

- Push the lever forward and turn the adjuster [A] to align the number with the arrow mark [B] on the lever holder.
- The distance from the grip to the lever is minimum at Number 5 and maximum at Number 1.

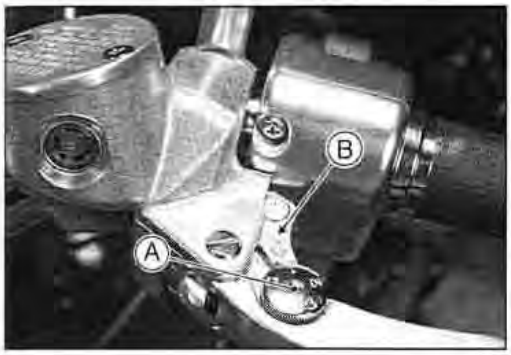

Clutch Fluid

Fluid Level Inspection

- Check that the brake fluid level in the clutch reservoir is between the lower [A] and the upper [B] level lines.



NOTE

Hold the reservoir horizontal when checking clutch fluid level.

★ If the fluid level is lower than the lower level line, fill the reservoir to the upper level line in the reservoir.

⚠WARNING

Change the fluid in the clutch line completely if the fluid must be refilled but the type and brand of the fluid that already is in the reservoir are unidentified.
After changing the fluid, use only the same type and brand of fluid thereafter. Mixing different types and brands of fluid lowers the fluid boiling point and could cause the clutch to be ineffective. It may also cause the rubber clutch parts to deteriorate.

Recommended Clutch fluid

Grade:	**D.O.T. 4 Heavy Duty Brake Fluid**
Brand:	**Castrol Girling-Universal**
	Castrol GT (LMA)
	Castrol Disc Brake Fluid
	Castrol Shock Premium Heavy Duty

NOTE

Since the clutch fluid is the same as the brake fluid, refer to Brake Fluid Section in the Brakes chapter for further details.

Torque - Clutch Reservoir Cap Screws: 1.5 N·m (0.15 kg·m, 13 in·lb)

Clutch Fluid Changing

- Level the clutch fluid reservoir and remove the reservoir cap.
- Remove the alternator outer cover and the rubber cap from the bleed valve on the clutch slave cylinder.
- Attach a clear plastic hose to the bleed valve and run the other end of the hose into a container.
- Fill the reservoir with fresh fluid.
- Change the clutch fluid as follows.
  Open the bleed valve [A], using a wrench.
  Pump the clutch lever and hold it [B].
  Close the bleed valve [C].
  Release the clutch lever [D].

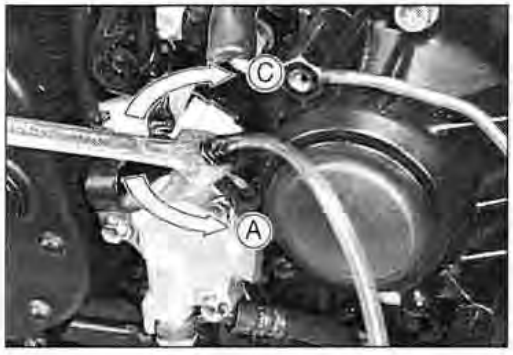

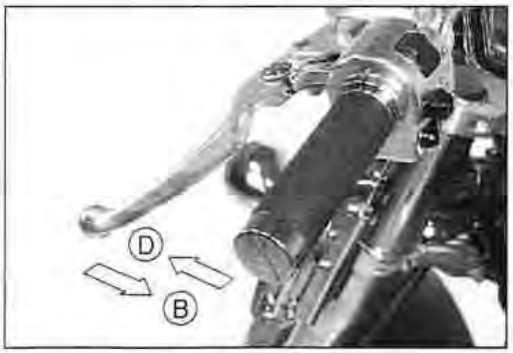

- Repeat this operation until fresh fluid comes out from the plastic hose or the color of the fluid changes.
- Check the fluid level in the reservoir often, replenishing it as necessary.

NOTE

If the fluid in the reservoir runs completely out any time during fluid changing, the bleeding operation must be done over again from the beginning since air will have entered the line.

⚠WARNING

Do not mix two brands of fluid.

Clutch Fluid

- After changing the fluid, check the clutch for good clutch power and no fluid leakage.
- ★ If necessary, bleed the air from the lines (see Bleeding the Clutch Line).
- Remove the clear plastic hose.
- Install the reservoir cap.
- Tighten the bleed valve, and install the rubber cap.

Torque - Clutch Reservoir Cap Screws: 1.5 N·m (0.15 kg·m, 13 in·lb)
Clutch Slave Cylinder Bleed Valve: 7.8 N·m (0.80 kg·m, 69 in·lb)

Bleeding the Clutch Line

- With the reservoir cap off, slowly pump the clutch lever several times until no air bubbles can be seen rising up through the fluid from the holes at the bottom of the reservoir. This bleeds the air from the master cylinder end of the line.

NOTE

Tap the clutch hose lightly going from the lower end to the upper end and bleed the air off at the reservoir.

- Attach a clear plastic hose to the bleed valve on the clutch slave cylinder, and run the other end of the hose into a container.



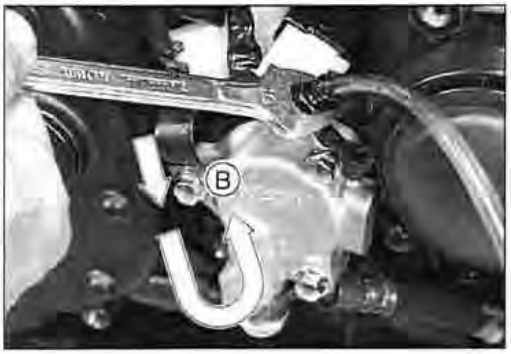

- Bleed the clutch line as follows:
  Pump the clutch lever a few times until it becomes hard and then hold it applied [A].
  Quickly open and close the bleed valve [B].
  Release the clutch lever [C].
  Check the fluid level in the reservoir often, replenishing it as necessary.

NOTE

If the fluid in the reservoir runs completely out any time during bleeding, the bleeding operation must be done over again from the beginning since air will have entered the line.

- Repeat this operation until no more air can be seen coming out into the plastic hose.

⚠ WARNING

Do not mix two brands of fluid.

Torque - Clutch Reservoir Cap Screws: 1.5 N·m (0.15 kg·m, 13 in·lb)
Clutch Slave Cylinder Bleed Valve: 7.8 N·m (0.80 kg·m, 69 in·lb)

Clutch Master Cylinder

Clutch Master Cylinder Removal

- Disconnect the starter lockout switch connector [A].
- Draw out the clutch fluid from the reservoir with a means like the fork oil level gage.

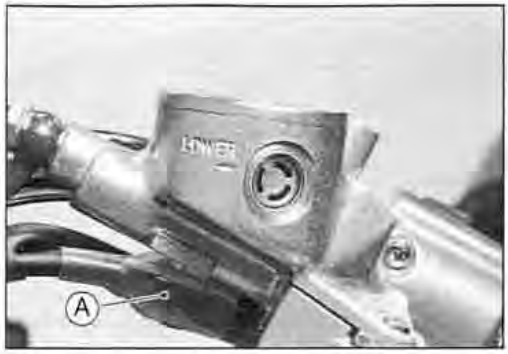

- Remove the banjo bolt [A] to disconnect the clutch hose from the master cylinder.
- Unscrew the clamp bolts [B], and take off the master cylinder [C] as an assembly with the clutch reservoir, clutch lever, and starter lockout switch installed.

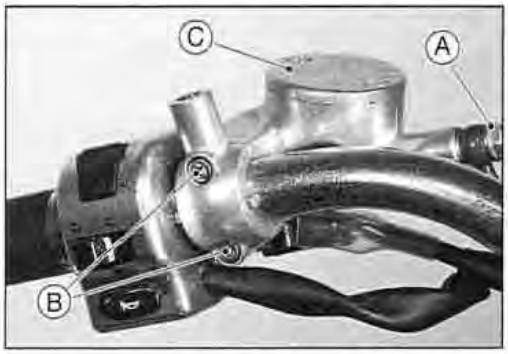

CAUTION

Clutch fluid quickly ruins painted surface; any spilled fluid should be completely washed away immediately.

Clutch Master Cylinder Installation

- Set the clutch master cylinder [A] to match its mating face [B] to the punch mark [C] of the handlebar.

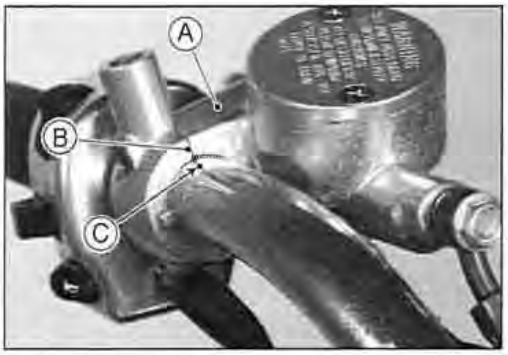

- The master cylinder clamp must be installed with the rear view mirror boss [A] upward.
- Tighten the upper clamp bolt [B] first, and then the lower clamp bolt [C]. There will be a gap at the lower part of the clamp after tightening.

Torque - Clutch Master Cylinder Clamp Bolts: 9.8 N·m (1.0 kg·m, 87 in·lb)

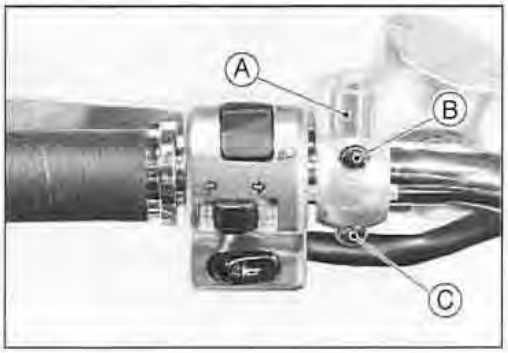

- Use a new flat washer on each side of the clutch hose fitting.
- Tighten the clutch hose banjo bolt.

Torque - Clutch Hose Banjo Bolt: 25 N·m (2.5 kg·m, 18.0 ft·lb)

- Replenish the clutch fluid into the reservoir and bleed the clutch line (see Bleeding the Clutch Line).
- Check that the clutch line has proper fluid pressure and no fluid leakage.

Clutch Master Cylinder

Clutch Master Cylinder Disassembly

- Remove the master cylinder.
- Remove the reservoir cap and diaphragm, and pour the clutch fluid into a container.
- Unscrew the locknut and pivot bolt, and remove the clutch lever.
- Pull the dust cover out of place, and remove the circlip.

Special Tool - Inside Circlip Pliers: 57001-143

- Pull out the primary cup [A], piston assembly [B], and return spring [C].

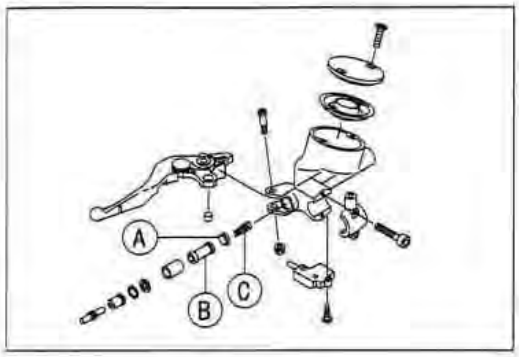

CAUTION

Do not remove the secondary cup from the piston since removal will damage it.

Clutch Master Cylinder Assembly

- Before assembly, clean all parts including the master cylinder with clutch fluid or alcohol.

CAUTION

Use only disc brake/clutch fluid, isopropyl alcohol, or ethyl alcohol, for cleaning parts. Do not use any other fluid for cleaning these parts. Gasoline, motor oil, or any other petroleum distilate will cause deterioration of the rubber parts. Oil spilled on any part will be difficult to wash off completely, and will eventually deteriorate the rubber used in the cylinder.

- Apply clutch fluid to the parts removed and to the inner wall of the cylinder.
- Take care not to scratch the piston or the inner wall of the cylinder.
- Install the push rod with the dust seal fitted into the groove.
- The push rod round end must be faced inwards.

Torque - Clutch Lever Pivot Bolt: 1.0 N·m (0.10 kg·m, 9 in·lb)
Clutch Lever Pivot Bolt Locknut: 5.9 N·m (0.60 kg·m, 52 in·lb)

- Install the clutch master cylinder (see this chapter).

Clutch Master Cylinder Inspection

- Disassemble the clutch master cylinder.
- Check that there are no scratches, rust or pitting on the inside of the master cylinder [A] and on the outside of the piston [B]
- ★ If the master cylinder or piston shows any damage, replace them.
- Inspect the primary cup [C] and secondary cup [D].
- ★ If a cup is worn, damaged, softened (rotted), or swollen, the piston assembly should be replaced to renew the cups.
- If fluid leakage is noted at the clutch lever, the piston assembly should be replaced to renew the cups.
- Check the dust cover for damage.
- If it is damaged, replace it.

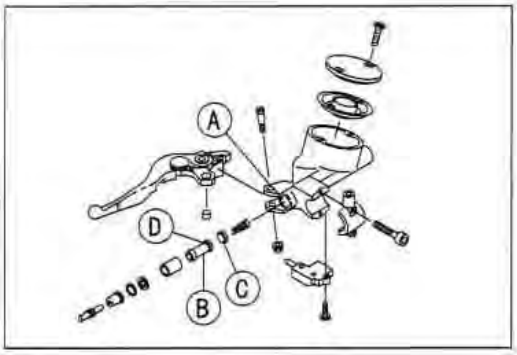

- Check that the relief and supply ports are not plugged.
- ★ If the small relief port becomes plugged, the clutch will drag. Blow the ports clean with compressed air.
- Check the piston return spring for any damage.
- ★ If the spring is damaged, replace it.

Clutch Slave Cylinder

Removal

- Remove:
  Alternator Outer Cover (see Electrical System chapter)
  Banjo Bolt [A]
  Clutch Slave Cylinder Bolts [B]
  Slave Cylinder [C]

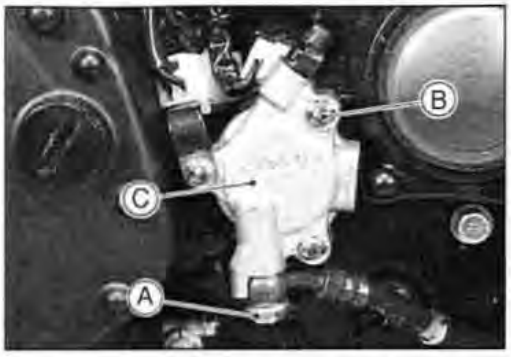

CAUTION

Immediately wash away any clutch fluid that spills. It may damage painted surfaces.

- Perform the following if the clutch slave cylinder is to be removed but not disassembled.

CAUTION

If the clutch slave cylinder is removed and left alone, the piston will be pushed out by spring force and the clutch fluid will drain out.

- Remove the clutch slave cylinder with the pipe installed.
- Push [A] the piston into the cylinder as far as it will go.

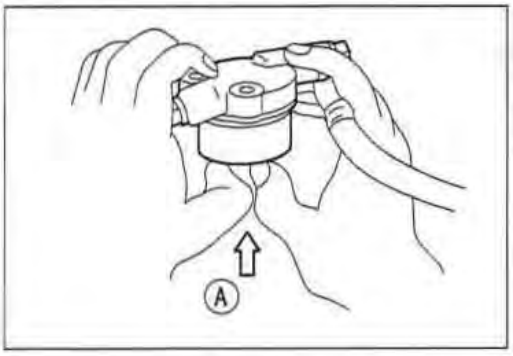

- Apply the clutch lever [A] slowly and hold it with a band [B].

NOTE

- *Holding the clutch lever keeps the piston from coming out.*



Installation

- Replace the spacer [A] of the clutch slave cylinder with a new one.
- Install the spacer so that the stepped side [B] faces outward.
- Apply a non-permanent locking agent to the threads of the clutch slave cylinder bolts [C].
- Finger tighten the clutch slave cylinder bolts.
- Remove the band from the clutch lever and release the clutch lever.

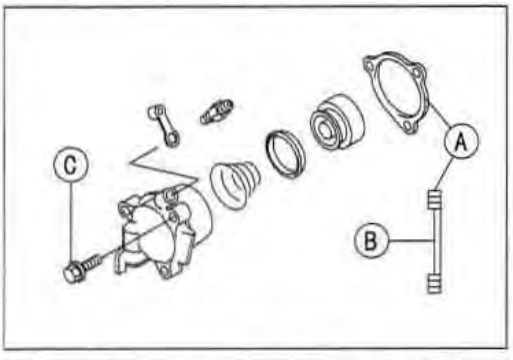

- Tighten the slave cylinder bolts [A].
- Replace the washers on each side of the clutch hose fitting with new ones.
- Tighten the banjo bolt [B] to the specified torque.

Torque - Clutch Pipe Banjo Bolt: 25 N·m (2.5 kg·m, 18.0 ft·lb)

- Check the fluid level in the master cylinder reservoir, and bleed the air in the clutch line.
- Check the clutch operation.



Clutch Slave Cylinder

Disassembly

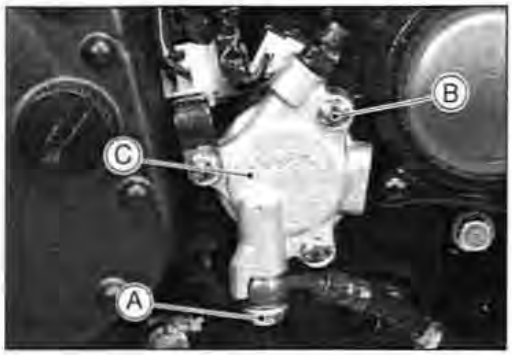

- Loosen the banjo bolt [A] at the clutch pipe lower end, and tighten it loosely.
- Unscrew the slave cylinder bolts [B] and detach the slave cylinder with the pipe installed from the engine.
- Pump the clutch lever until the piston comes out of the cylinder.
- Unscrew the banjo bolt and remove the slave cylinder [C].

CAUTION

Immediately wash away any clutch fluid that spills. It may damage painted surfaces.

NOTE

If the clutch slave cylinder is removed and left alone, the piston will be pushed out by spring force.

- Remove:
  Spring
  Fluid Seal

Assembly

CAUTION

Replace the fluid seal with a new one if it was removed from the piston.

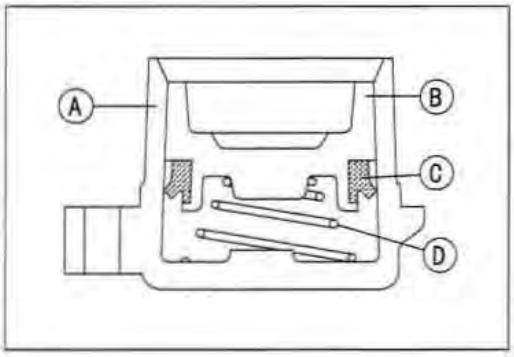

- Apply clutch fluid to the outside of the piston and the fluid seal.
- Install the fluid seal as shown.
  Cylinder [A]
  Piston [B]
  Fluid Seal [C]
  Spring [D]

Clutch

Clutch Cover Removal

- Drain the engine oil (see Engine Lubrication System chapter).
- Remove:
  Front Exhaust Pipe [A] (see Engine Top End chapter)
  Downtube [B] (see Frame chapter, but remove the downtube with the right footpeg and rear master cylinder left installed)



- Unscrew the seventeen cover bolts [A].
- Using the pry points [B], take the cover off the crankcase.

NOTE

Do not remove the damper cover [C].

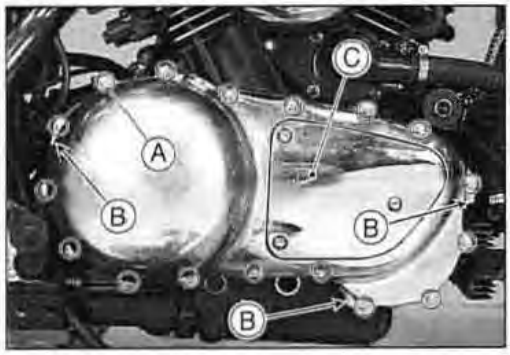

Clutch Removal

NOTE

Use an air impact wrench for clutch removal.

- Remove the clutch cover (see this chapter).
- Remove the retainer [A] and take the operating plate [B] out of the clutch assembly.

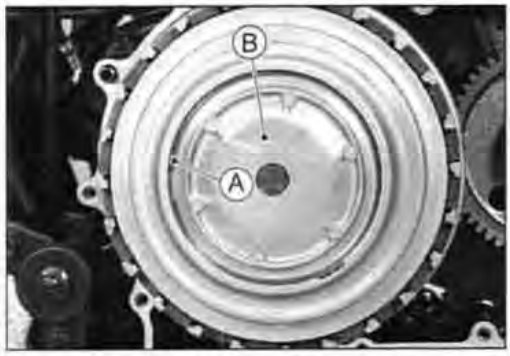

- Unscrew the clutch hub nut [A] by using an air impact wrench.



- Take the clutch spring plate [A], clutch spring [B], and the clutch spring holder [C] out of the clutch hub.
- Take the back torque limiter springs [D], friction/steel plates [E], and the outer hub [F] out of the clutch housing.

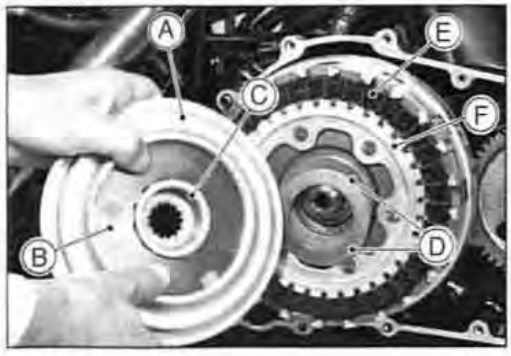

Clutch

- Take the inner clutch hub [A], collar [B], washer [C] and clutch housing [D] out of the crankcase.

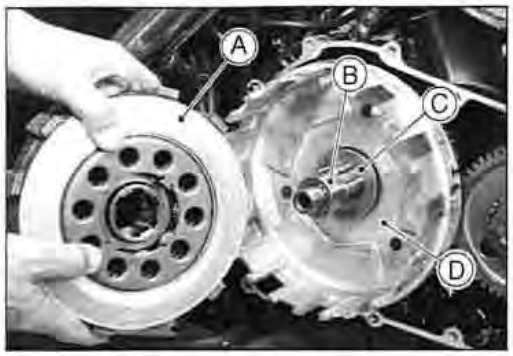

- Pull the needle bearing [A], sleeve [B], and thrust washer [C] off the drive shaft.

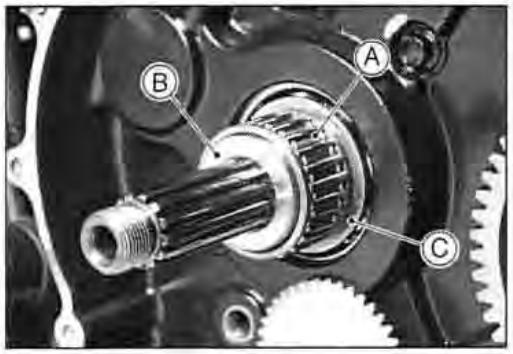

Clutch Installation

★When replacing any one of the following parts, check the spring plate free play (see Clutch Plate Replacement).
Spring Plate [A]
Friction Plates [B]
Steel Plates [C]

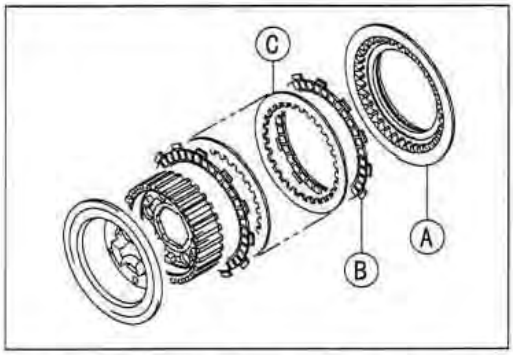

- When installing the clutch housing, mesh the oil pump drive gear [A] with the oil pump gear [B] so that the pump gear turns smoothly.

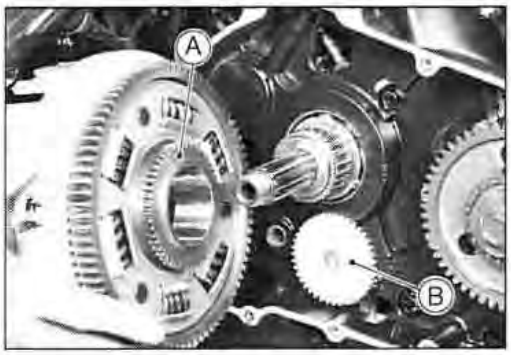

Clutch

CAUTION

If new dry steel plates and friction plates are installed, apply engine oil to the surfaces of each plate to avoid clutch plate seizure.

- Install the friction plates and steel plates, starting with a friction plate and alternating them.
- First, install the friction plates except the last plate, fitting their tangs in the deeper grooves [A]. Next, install the last friction plate [B] in the shallower grooves [C].

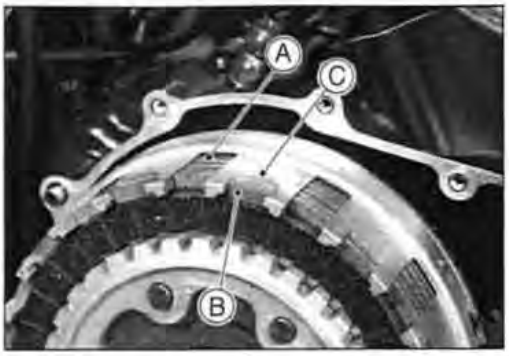

- Apply grease to the back torque limiter springs [A] and install them on the spring holder [B] as shown.

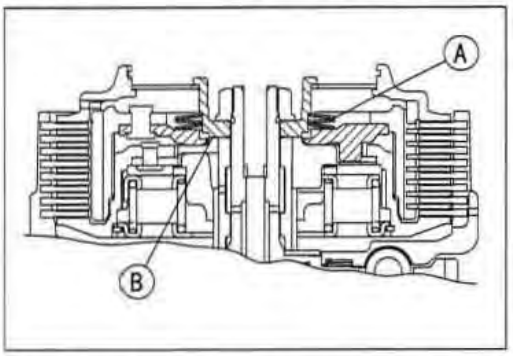

- Tighten the clutch hub nut [A] to the specified torque while holding the primary gear bolt [B].

Torque - Clutch Hub Nut: 145 N·m (15.0 kg·m, 110 ft·lb)

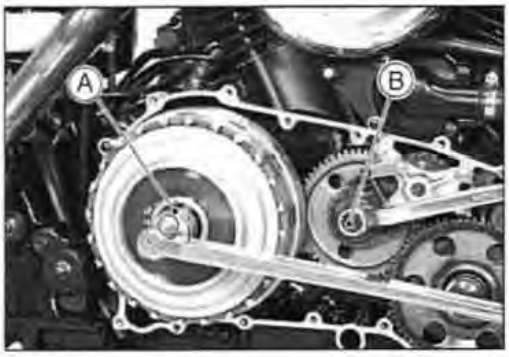

- Squeeze the clutch lever slowly and hold it with a band while pushing [A] the spring plate pusher [B] into the clutch hub.

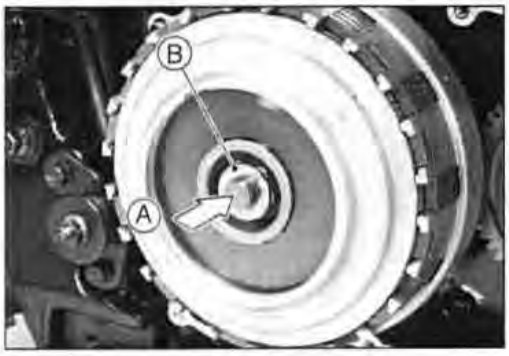

Clutch Inner Hub Disassembly

- Using a press [A], and a suitable bearing driver [B], push the damper spring holder [C] to remove the retainer [D].

Special Tool - Bearing Driver Set: 57001-1129

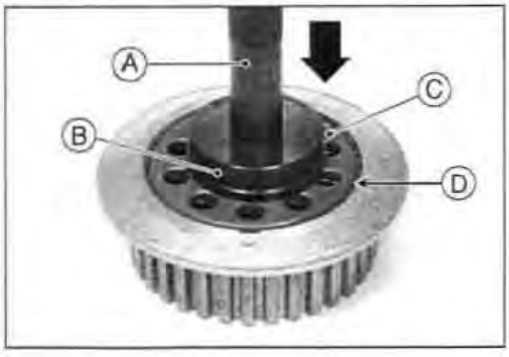

Clutch

- Remove:
  Retainer [A]
  Spring Holder [B]
  Damper Spring [C]
  Spring Holder [D]
  Spacer [E]
  Damper Cam [F]
  Inner Clutch Hub [G]

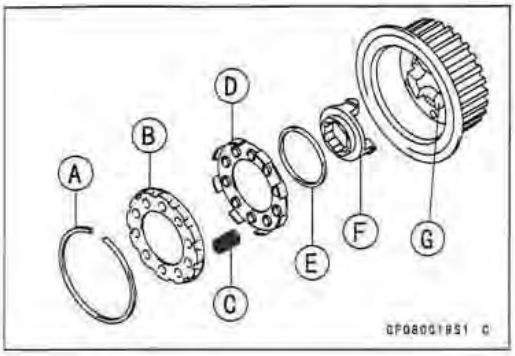

Spring Plate Free Play Measurement

Insufficient clutch free play will cause the engine braking effect to be more sudden, resulting in rear wheel hop. On the other hand, if the free play is excessive, the clutch lever may feel "spongy" or pulsate when pulled.

CAUTION
Take care not to damage the drive shaft.

- Hold an extra drive shaft [A] steady with a vise and install the clutch parts on an extra drive shaft.
- Do not install the back torque limiter springs [B] and the operating plate [G].
- Tighten the clutch hub nut [C] to about **29 N·m (3 kg·m, 22 ft·lb)** of torque to seat the clutch plates closely.
- Unscrew the hub nut, then take the spring holder [E], operating plate, and the clutch spring [D] out of the housing.
- Reinstall the clutch spring plate [F].

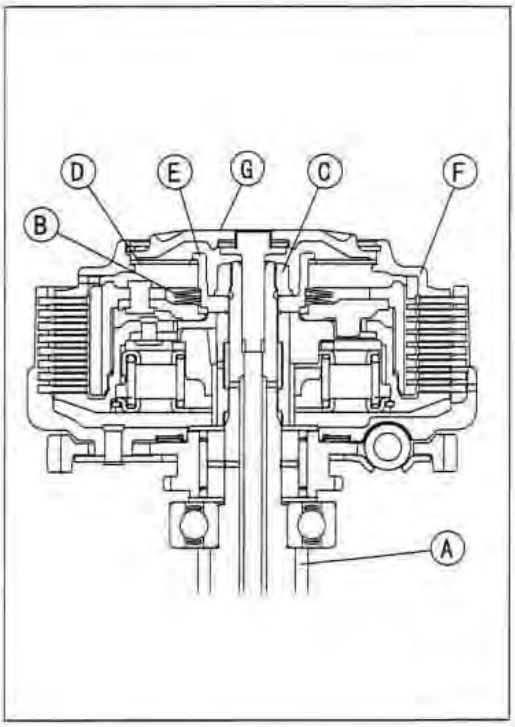

- Reinstall the spring holder [A] and tighten the hub nut [B] lightly.
- To measure the free play, install the dial gage [D] against the clutch spring plate [C].
- Set the reading of the gage "0".
- Turn [E] the clutch housing right and left. The difference [F] between the highest and lowest gage readings is the amount of free play.

Spring Plate Free Play
Usable Range: 0.30 ~ 1.30 mm

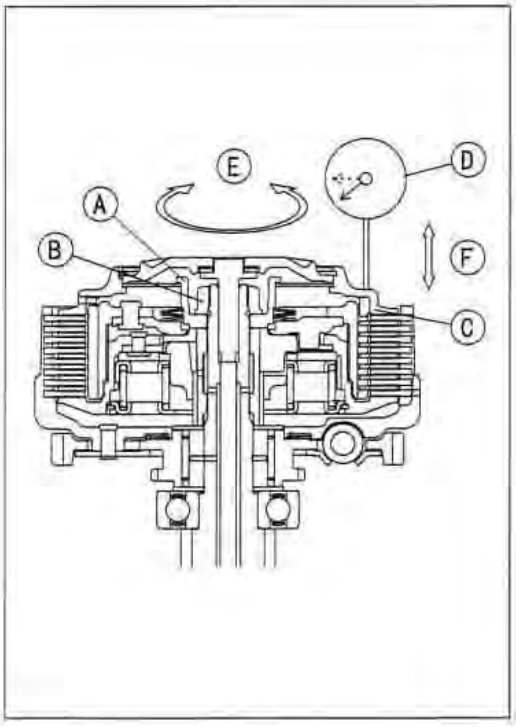

Clutch

Clutch Plate Replacement

★When using all the orignal friction plates [A] and steel plates [B], do the following.

○ Measure the spring plate free play.

★If the free play is not within the usable range, change all the friction plates.

★When replacing all the friction plates,do the following.

○ Install the steel plates and all the new friction plates in the housing temporarily for measurement purpose. (Standard steel plates; 2.0 mm thick × 6 ~ 7 and 1.6 or 2.3 mm thick × 0 ~ 1, total 7 plates)

○ Measure the spring plate free play.

★If the free play is not within the usable range, change one of the steel plates to a thicker or thinner one to get the correct free play.

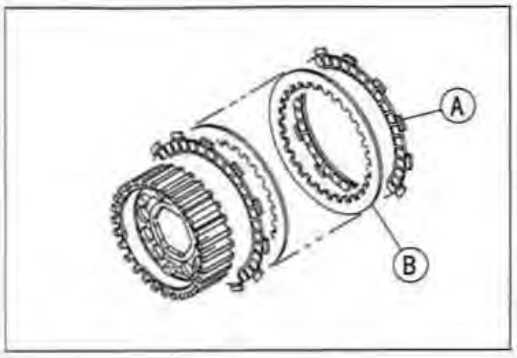

Steel Plates

Thickness (mm)	Part No.
1.6	13089-1080
2.0	13089-1075
2.3	13089-1081

CAUTION

If new friction plates are installed, apply engine oil to the surfaces of each plate to avoid clutch plate seizure.

Friction Plate Wear, Damage Inspection

● Visually inspect the friction plates [A] for signs of seizure, overheating (discoloration), or uneven wear.

★If any friction plates show signs of damage, replace the friction plates and measure the spring plate free play.

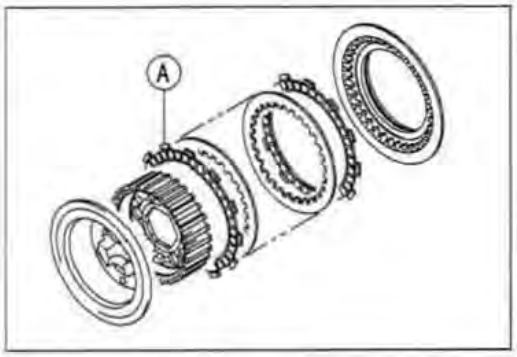

Friction and Steel Plate Warp

● Place each friction plate or steel plate on a surface plate, and measure the gap between the surface plate [A] and each friction plate or steel plate [B] with a thickness gage [C]. The gap is the amount of friction or steel plate warp.

★If any plate is warped over the service limit, replace it and measure the spring plate free play.

Friction and Steel Plate Warp

Standard: 0.2 mm or less

Service Limit: 0.3 mm

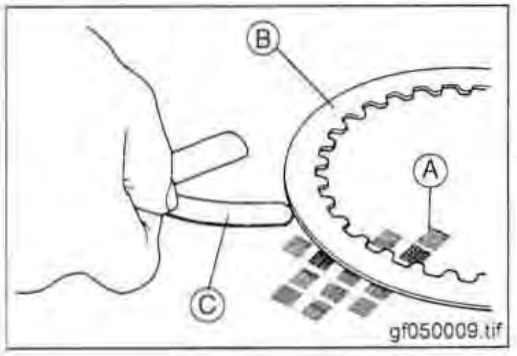

Clutch

Clutch Spring Height Measurement

- Measure the height [B] of the clutch spring [A].

★ If the spring height is less than the service limit, it must be replaced.

Clutch Spring Height

Standard: 4.3 mm

Service Limit: 4 mm

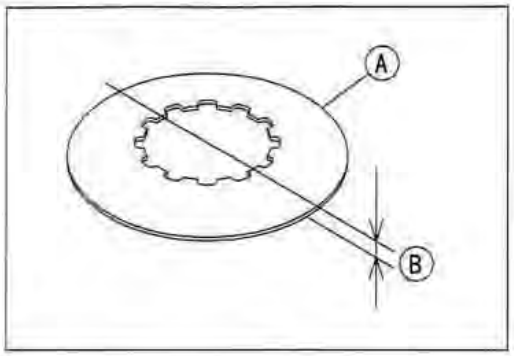

Clutch Housing Finger Inspection

- Visually inspect the fingers [A] of the clutch housing where the tangs [B] of the friction plates hit them.

★ If they are badly worn or if there are grooves cut where the tangs hit, replace the housing. Also, replace the friction plates if their tangs are damaged.

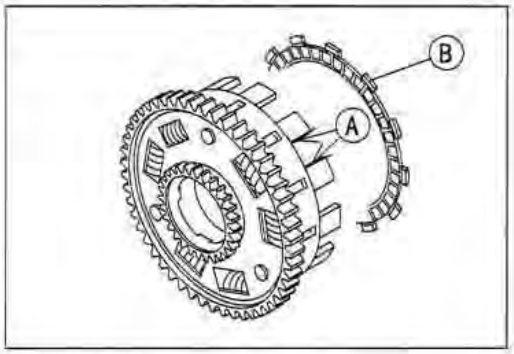

Clutch Hub Spline Inspection

- Visually inspect where the teeth [B] on the steel plates wear against the splines [A] of the clutch hub.

★ If there are notches worn into the splines, replace the clutch hub. Also, replace the steel plates if their teeth are damaged.

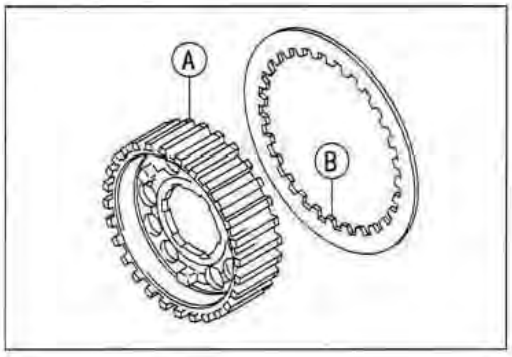

Cam Damper Inspection

- Disassemble the clutch (see Clutch Inner Hub Disassembly).
- Visually inspect the damper cam [A], damper spring [B], and cam follower [C].

★ Replace any damaged parts.

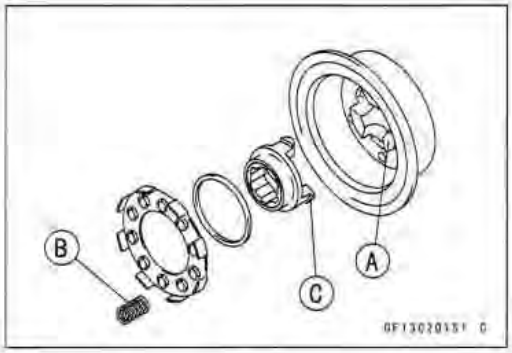

Engine Lubrication System

Table of Contents

Exploded View....6-2
Engine Oil Flow Chart....6-3
Specifications....6-5
Engine Oil and Oil Filter....6-6
Oil Level Inspection....6-6
Oil Level Inspection (G2/H2 Model)....6-6
Engine Oil Change....6-7
Oil Filter Change....6-7
Oil Screen Cleaning....6-7
Oil Pump....6-9
Removal....6-9
Installation....6-9
Oil Hoses and Pipes....6-10
Outside Oil Hose Removal....6-10
Outside Oil Hose Installation....6-10
Inside Oil Pipe Removal....6-11
Inside Oil Pipe Installation....6-11
Oil Pressure....6-12
Oil Pressure Measurement....6-12
Relief Valve Inspection....6-12

6-2 ENGINE LUBRICATION SYSTEM

Exploded View

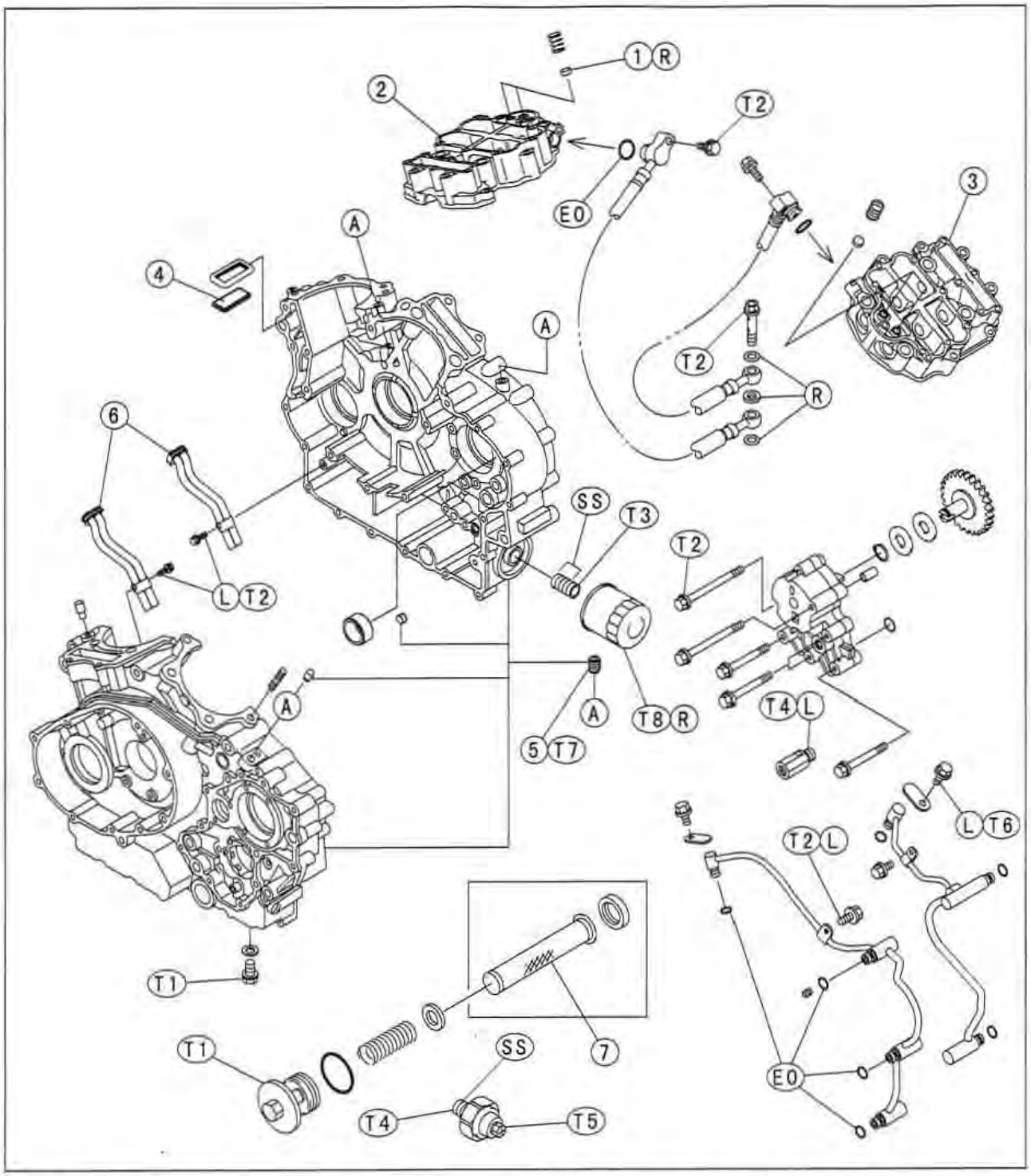

1. HLA Oil Filter
2. Front Rocker Case
3. Rear Rocker Case
4. Oil Separator
5. Oil Nozzle
6. Breather Pipes
7. Oil Screen

EO: Apply engine oil.
L: Apply a non-permanent locking agent.
R: Replacement Parts
SS: Apply silicone sealant (Kawasaki Bond: 56019-120).
T1: 20 N·m (2.0 kg·m, 14.5 ft·lb)
T2: 9.8 N·m (1.0 kg·m, 87 in·lb)
T3: 25 N·m (2.5 kg·m, 18.0 ft·lb)
T4: 15 N·m (1.5 kg·m, 11.0 ft·lb)
T5: 1.5 N·m (0.15 kg·m, 13 in·lb)
T6: 8.8 N·m (0.90 kg·m, 78 in·lb)
T7: 3.4 N·m (0.35 kg·m, 30 in·lb)
T8: 18 N·m (1.8 kg·m, 13.0 ft·lb)

Engine Oil Flow Chart

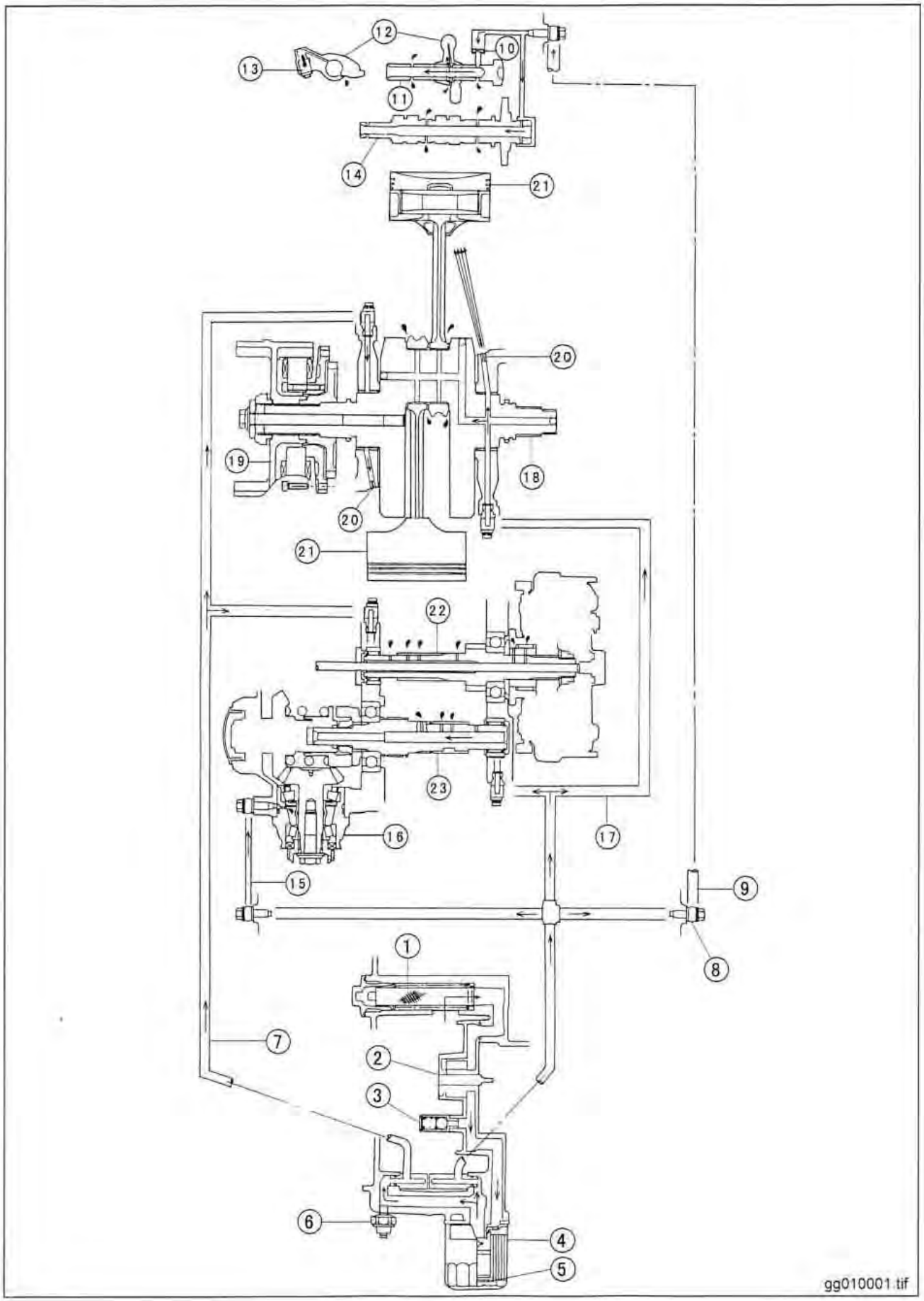

6-4 ENGINE LUBRICATION SYSTEM

Engine Oil Flow Chart

1~23: Oil Flow
1. Oil Screen
2. Oil Pump
3. Relief Valve
4. Oil Filter
5. Bypass Valve
6. Oil Pressure Switch
7. Inside Oil Pipe
8. Banjo Bolt of Right Crankcase Rear
9. Outside Oil Hose
10. HLA Oil Filter
11. Rocker Shafts
12. Rocker Arms
13. HLA (Hydraulic Lash Adjuster)
14. Camshafts
15. Outside Oil Pipe
16. Front Bevel Gear Case
17. Inside Oil Pipe
18. Crankshaft
19. Alternator Rotor
20. Oil Nozzle
21. Pistons
22. Drive Shaft
23. Output Shaft

Specifications

Item	Standard
Engine Oil:	
Grade	API SE, SF, or SG class, or API SH or SJ with JASO MA
Viscosity	SAE 10W-40, 10W-50, 20W-40, or 20W-50
Capacity	2.5 L (when filter is not removed)
	2.7 L (when filter is removed)
	3.5 L (when engine is completely dry)
Level (after idling or running)	Between upper and lower level lines
Oil Pressure Measurement:	
Oil pressure @2 000 r/min (rpm),	
Oil temp. 100°C (212°F)	345 ~ 440 kPa (3.5 ~ 4.5 kg/cm^2, 50 ~ 64 psi)

Special Tools - Oil Pressure Gauge, 5 kg/cm^2: 57001-125
Oil Pressure Gauge Adapter, PT 1/8: 57001-1033
Oil Filter Wrench: 57001-1249

Sealant - Kawasaki Bond (Silicone Sealant): 56019-120

6-6 ENGINE LUBRICATION SYSTEM

Engine Oil and Oil Filter

⚠ WARNING

Motorcycle operation with insufficient, deteriorated, or contaminated engine oil will cause accelerated wear and may result in engine or transmission seizure, accident, and injury.

Oil Level Inspection

- Situate the motorcycle so that it is vertical.
- Check that the engine oil level is between the upper [A] and lower [B] levels in the gauge.

Front [C]

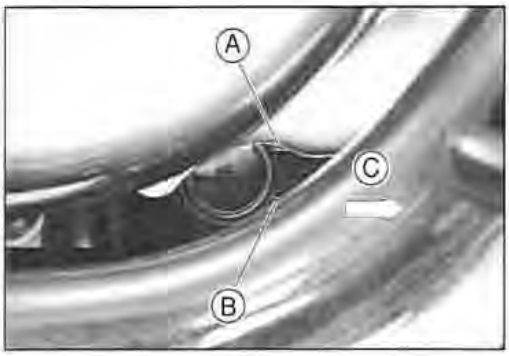

Oil Level Inspection (G2/H2 Model)

- Situate the motorcycle so that it is vertical.
- Check that the engine oil level is between the upper [A] and lower [B] levels in the gauge.

Clutch Cover [C]
Front [D]

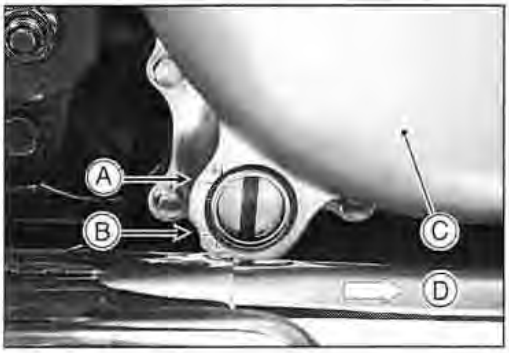

NOTE

- *Situate the motorcycle so that it is perpendicular to the ground.*
- *If the motorcycle has just been used, wait several minutes for all the oil to drain down.*
- *If the oil has just been changed, start the engine and run it for several minutes at idle speed. This fills the oil filter with oil. Stop the engine, then wait several minutes until the oil settles.*

CAUTION

Racing the engine before the oil reaches every part can cause engine seizure.
If the engine oil gets extremely low or if the oil pump or oil passages clog up or otherwise do not function properly, the oil pressure warning light will light. If this light stays on when the engine is running above idle speed, stop the engine immediately and find the cause.

Engine Oil and Oil Filter

Engine Oil Change

- Situate the motorcycle so that it is vertical after warming up the engine.
- Remove the engine oil drain plug [A] and drain the oil.
  Front [B]
- The oil in the oil screen chamber can be drained by removing the oil screen plug (see Oil Screen Cleaning).
- The oil in the filter can be drained by removing the filter (see Oil Filter Change).
- ★ Replace the drain plug gasket with a new one if it is damaged.

Torque - Engine Oil Drain Plug , Oil Screen Plug: 20 N·m (2.0 kg·m, 14.5 ft·lb)
Oil Filter: 18 N·m (1.8 kg·m, 13.0 ft·lb)

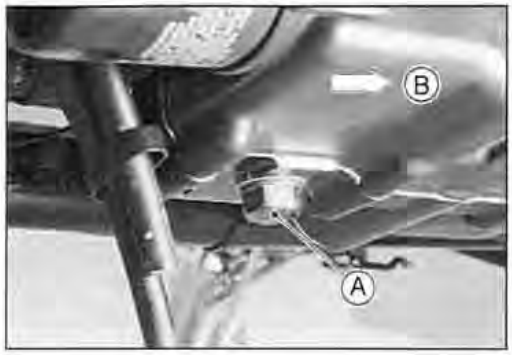

- Pour in the specified type and amount of oil.

Torque - Oil Filler Plug: 1.5 N·m (0.15 kg·m, 13 in·lb)

Engine Oil

Grade:	**API SE, SF, or SG class, or API SH or SJ with JASO MA**
Viscosity:	**SAE 10W-40, 10W-50, 20W-40, or 20W-50**
Amount:	**2.5 L (when filter is not removed)**
	2.7 L (when filter is removed)
	3.5 L (when engine is completely dry)

Oil Filter Change

- Drain the engine oil.
- Remove the oil filter [A] with the oil filter wrench [B].
  Front [C]

Special Tool - Oil Filter Wrench: 57001-1249

NOTE

The filter has an oil filter bypass valve which can not be removed.

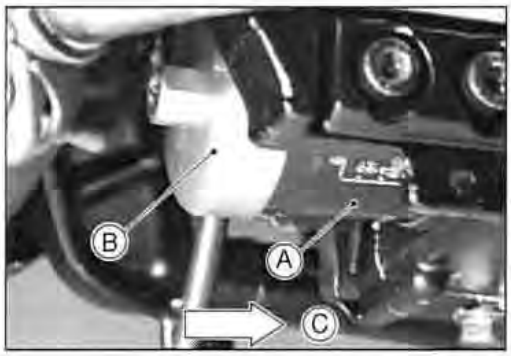

- Apply oil to the gasket before installation.
- Tighten the filter with the oil filter wrench.
- Pour in the specified type and amount of oil.

Torque - Oil Filter: 18 N·m (1.8 kg·m, 13.0 ft·lb)

Oil Screen Cleaning

- Remove:
  Engine Oil (Drain)
  Oil Screen Plug [A]
  Front [B]

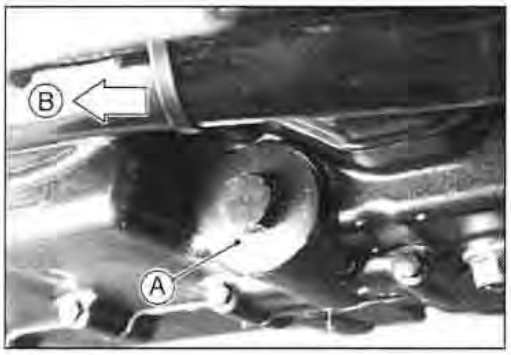

Engine Oil and Oil Filter

- Remove the oil screen [A] and the spring [B].
- Clean the oil screen with high-flash point solvent and remove any particles stuck to it.
- Clean the screen thoroughly whenever the engine oil is changed.

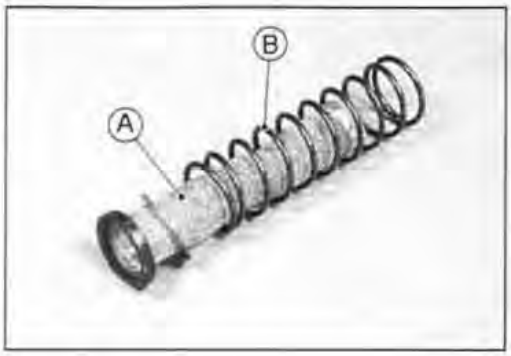

⚠ WARNING

Clean the screen in a well-ventilated area, and take care that there is no spark or frame anywhere near the working area. Because of the danger of highly flammable liquids, do not use gasoline or low-flash point solvents.

NOTE

While cleaning the screen, check for any metal particles that might indicate internal engine damage.

- Check the screen carefully for any damage: holes and broken wires.
★ If the screen is damaged, replace it.
- Be sure to put in the oil screen with the rubber gasket end [C] inside.

★ Replace the screen plug O-ring with new one if it is damaged.

Torque - Oil Screen Plug: 20 N·m (2.0 kg·m, 14.5 ft·lb)

- Pour in the specified type and amount of oil.

Oil Pump

Removal

- Remove the engine (see Engine Removal/Installation chapter).
- Split the crankcase (see Crankshaft/Transmission chapter).
- Remove the oil pump mounting bolts, and take off the pump [A] out of the right crankcase.
- Unscrew the relief valve [B] if necessary.

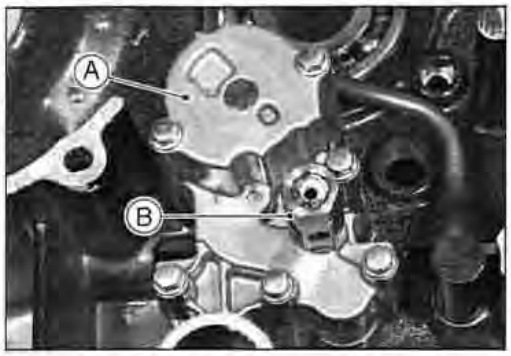

- Remove:
  Circlip [A]
  Pump Shaft [B]
  Washer [C]
  Pump Gear [D]

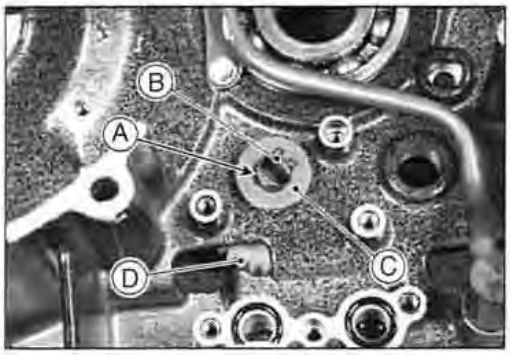

Installation

- Note the position of the oil pump shaft projection [A] and turn the pump gear shaft so that the projection fits into the slot [B].
- Replace the O-rings [C] with new ones if they are damaged.
- Tighten the oil pump mounting bolts to the specified torque.

Torque - Oil Pump Mounting Bolts: 9.8 N·m (1.0 kg·m, 87 in·lb)

- Apply a non-permanent locking agent to the threads of the relief valve and install it.

Torque - Relief Valve: 15 N·m (1.5 kg·m, 11.0 ft·lb)

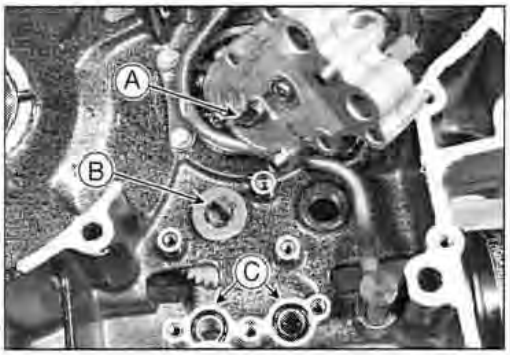

Oil Hoses and Pipes

Outside Oil Hose Removal

- Remove the engine (see Engine Removal/Installation chapter).
- Remove:
  Rocker Case Cover
  Oil Hose Flange Bolts [A] on Front and Rear Rocker Cases
  Oil Hose Banjo Bolts on Right Crankcase behind Rear Cylinder
- Remove the front oil hose and the rear oil hose.

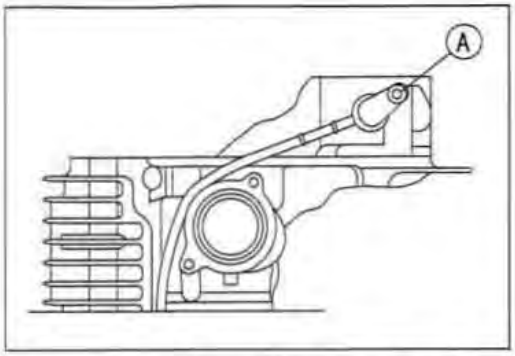

Outside Oil Hose Installation

- Run the front oil hose [A] over the inlet pipe [B] as shown.
  Front [C]



- Run the rear oil hose [A] downward.
- Run both oil hoses between the inlet pipe [B] and the cylinder fins [C].
  Front [D]

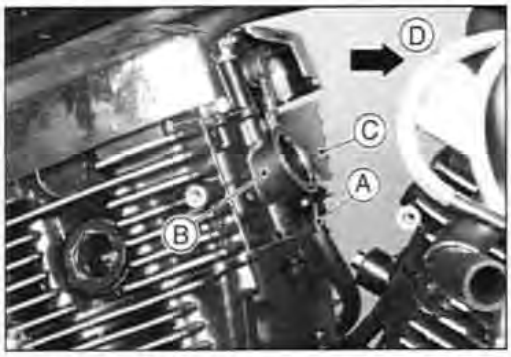

- Install each bottom end of the oil hoses on the right crankcase behind the rear cylinder as shown.
  Front Oil Hose [A]
  Rear Oil Hose [B]
- Face the paint marks [C] rearward.
- Replace the copper washers on each side of the banjo bolt with new ones.

Torque - Oil Hose Flange Bolts: 9.8 N·m (1.0 kg·m, 87 in·lb)
Oil Hose Banjo Bolt [D]: 9.8 N·m (1.0 kg·m, 87 in·lb)

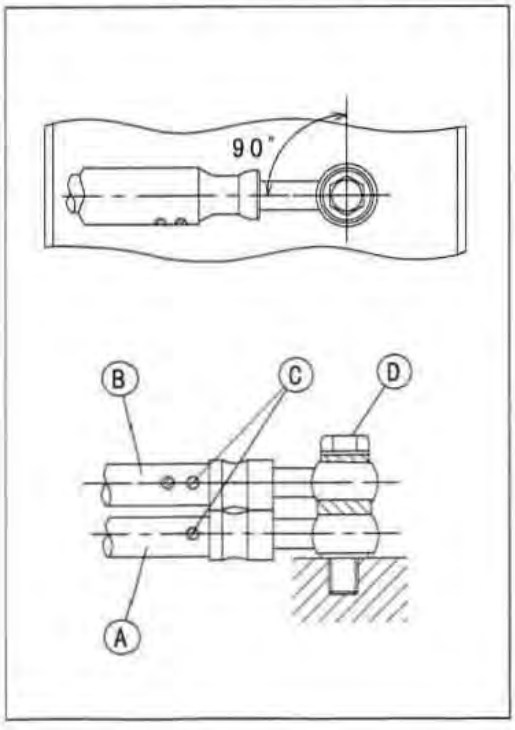

Oil Hoses and Pipes

Inside Oil Pipe Removal

- Split the crankcase (see Crankshaft/Transmission chapter).
- Remove:
  Clamp Bolts [A]
  Holder Bolt [B]
  Separator [C]
- Remove the inside oil pipe [D] and the breather pipe [E] from the right crankcase [F].

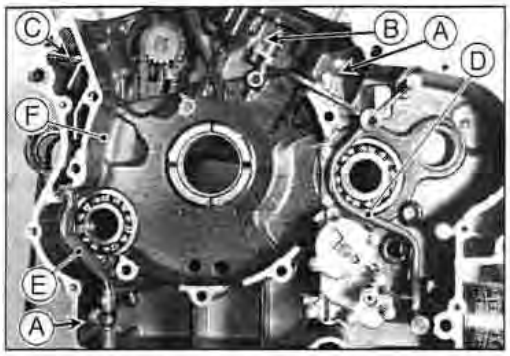

- Remove:
  Clamp Bolt [A]
  Holder Bolt [B]
- Remove the inside oil pipe [C] and the breather pipe [D] from the left crankcase [E].
- Remove the speparator [F].

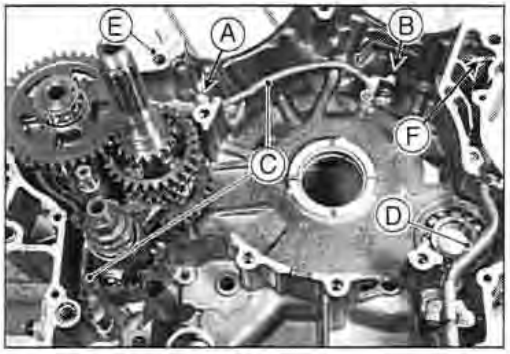

Inside Oil Pipe Installation

- Check that the oil pipe fitting O-rings [A] are in good condition.
- Apply engine oil to the O-rings before installation.
  Oil Pipe [B]
  Fitting [C]

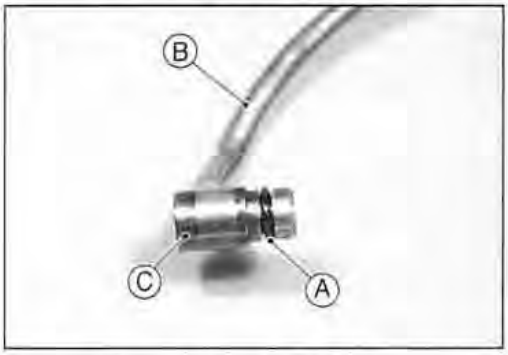

- Install the transmission gears, and then the left inside oil pipe [A] on the left crankcase [B].
- Install:
  Clamp Bolts [C]
  Holder Bolt [D]
  Oil Nozzle [E]
  O-ring [F]

Non-Permanent Locking Agent -
Oil Pipe Holder Bolts, Oil Pipe Clamp Bolts

Torque - Oil Pipe Holder Bolts: 8.8 N·m (0.90 kg·m, 78 in·lb)
Oil Pipe Clamp Bolts: 9.8 N·m (1.0 kg·m, 87 in·lb)

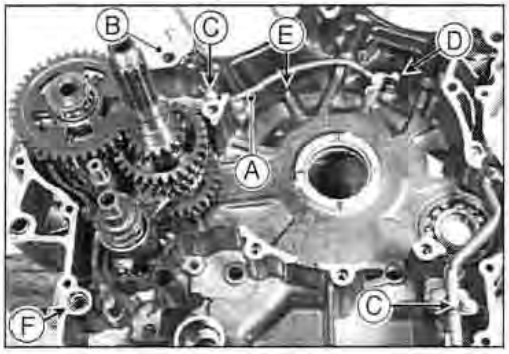

Oil Pressure

Oil Pressure Measurement

NOTE

Measure the oil pressure after the engine is warmed up.

- Remove the oil pressure switch lead and unscrew the oil pressure switch [A].
- Attach the oil pressure gauge [B] and adapter [C] to the switch hole.

Special Tools - Oil Pressure Gauge, 5 kg/cm²: 57001-125
Oil Pressure Gauge Adapter, PT 1/8: 57001-1033

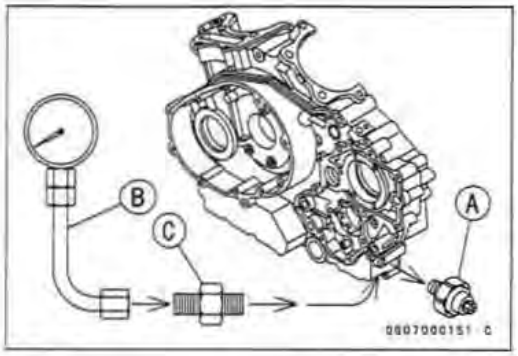

- Start the engine and warm up the engine.
- Run the engine at the specified speed, and read the oil pressure gauge.

★ If the oil pressure is much lower than the standard, check the oil pump, oil pump relief valve, and/or crankshaft bearing wear and con-rod big end bearing insert wear immediately.

★ If the reading is much higher than the standard, check the oil screen first, and the oil passages for dirt or clogging. Also, replace the oil filter.

Oil Pressure
Standard: 345 ~ 440 kPa (3.5 ~ 4.5 kg/cm², 50 ~ 64 psi)
@2000 r/min (rpm), oil temp. 90°C (194°F)

- Stop the engine.
- Remove the oil pressure gauge and adapter.

⚠ WARNING

Take care against burns from hot engine oil that will drain through the oil passage when the plug is removed.

- When installing the oil pressure switch, apply silicone sealant to the threads of the switch, and tighten it to the specified torque.

Torque - Oil Pressure Switch: 15 N·m (1.5 kg·m, 11.0 ft·lb)

Relief Valve Inspection

- Split the crankcase (see Crankshaft/Transmission chapter).
- Remove the relief valve [A] from the oil pump [B].
- Check to see if the valve slides smoothly when pushing it in with a wooden or other soft rod, and see if it comes back to its seat by spring pressure.

NOTE

Inspect the valve in its assembled state. Disassembly and assembly may change the valve performance.

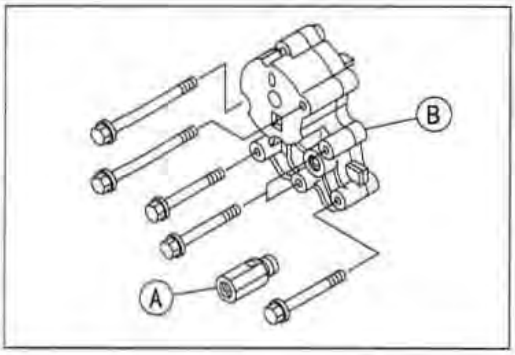

★ If any rough spots are found during above inspection, wash the valve clean with a high-flash point solvent and blow out any foreign particles that may be in the valve with compressed air.
Valve [A]
Spring [B]

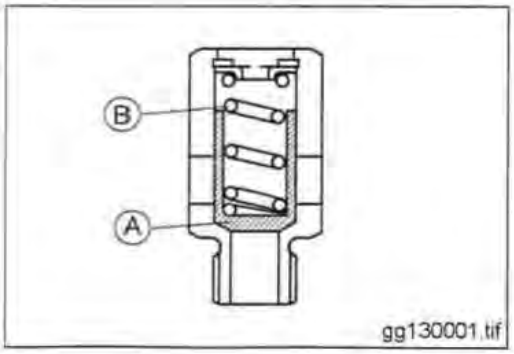

⚠ WARNING

Clean the relief valve in a well-ventilated area, and take care that there is no spark or flame anywhere near the working area. Because of the danger of highly flammable liquids, do not use gasoline or low-flash point solvent.

★ If cleaning does not solve the problem, replace the relief valve as an assembly. The relief valve is precision made with no allowance for replacement of individual parts.

Engine Removal/Installation

Table of Contents

Exploded View 7-2
Specifications 7-3
Engine Removal/Installation 7-4
  Engine Removal 7-4
  Engine Installation 7-7

Exploded View

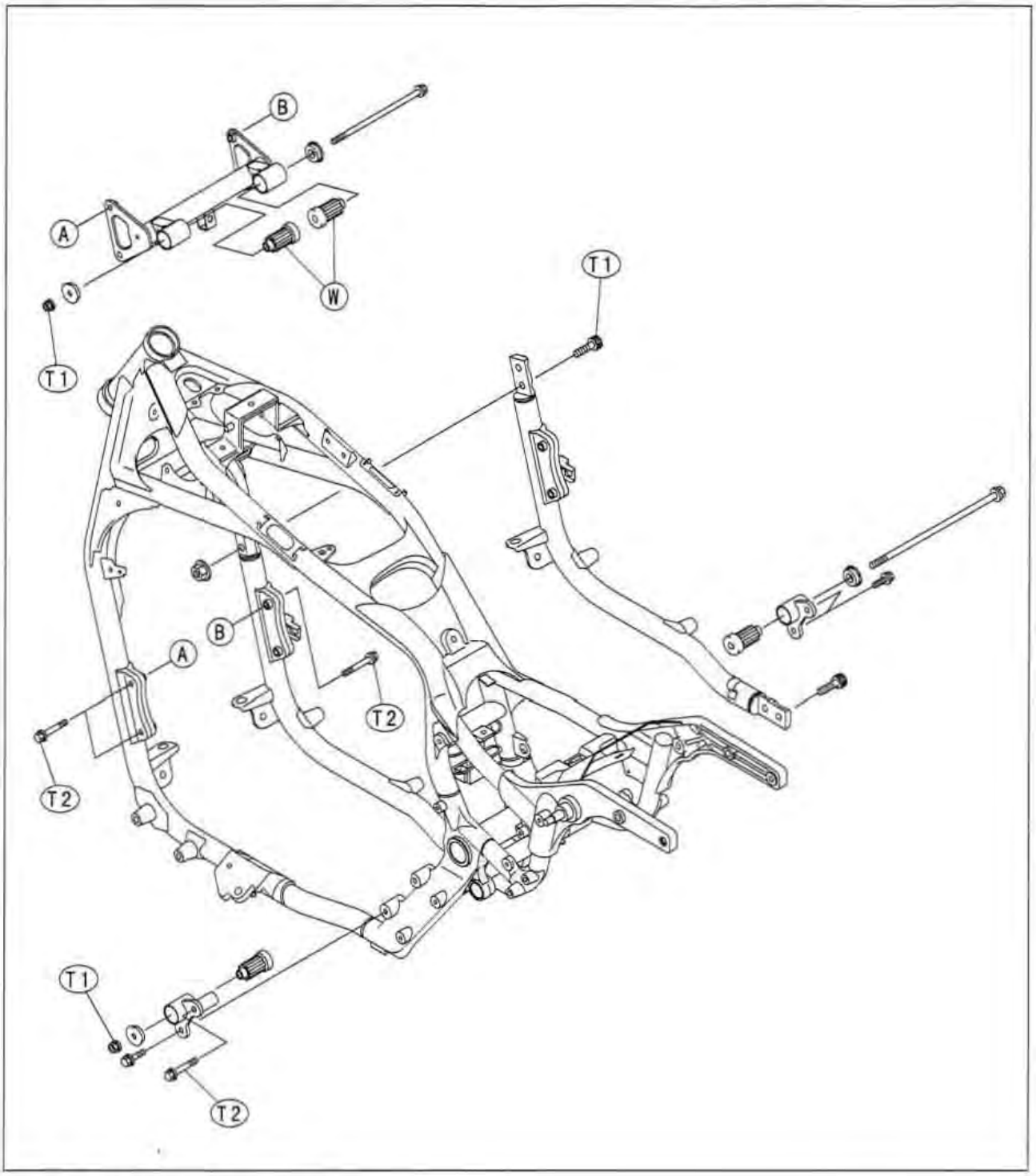

W: Apply soap and water solution.

T1: 44 N·m (4.5 kg·m, 33 ft·lb)

T2: 23 N·m (2.3 kg·m, 16.5 ft·lb)

Specifications

Special Tools - Jack: 57001-1238
Attachment Jack: 57001-1398

Engine Removal/Installation

Engine Removal

- Support the rear part of the frame on the jack [A].

Special Tools - Jack: 57001-1238
Attachment Jack [B]: 57001-1398



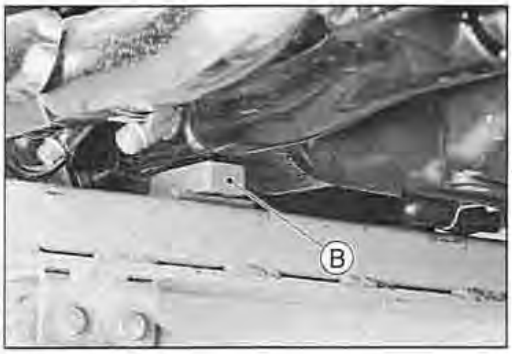

- Squeeze the brake lever slowly and hold it with a band [A].

⚠ WARNING

Be sure to hold the front brake when removing the engine, or the motorcycle may fall over. It could cause an accident and injury.

CAUTION

Be sure to hold the front brake when removing the engine, or the motorcycle may fall over. The engine or the motorcycle could be damaged.

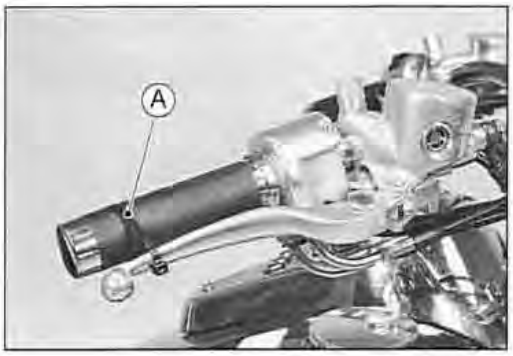

- Drain:
  - Coolant (see Cooling System chapter)
  - Engine Oil (see Engine Lubrication System chapter)
- Disconnect the battery negative (–) terminal.
- Remove:
  - Front Guard (see Frame chapter)
  - Fuel Tank [A] (see Fuel System chapter)
  - Left and Right Air Cleaner Housings [B] (see Fuel System chapter)
  - Fuel Pump (see Fuel System chapter)
  - Surge Tank (see Fuel System chapter)
  - Spark Plug Leads [C]
  - Air Suction Valve Hoses

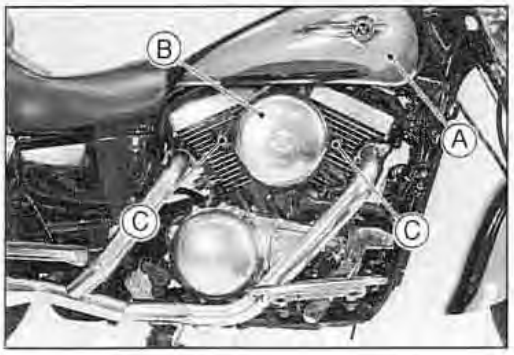

Engine Removal/Installation

- Disconnect:
  Bands [A]
  Radiator Fan Motor Connector [B]
  Rear Brake Light Switch Connector [C]
- Remove:
  Radiator (see Cooling System chapter)
  Front and Rear Shift Pedals
  Alternator Outer Cover (see Electrical System chapter)

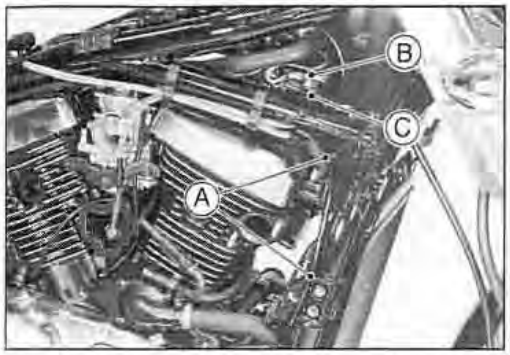

- Disconnect:
  Stater Motor Terminal
  Alternator Connectors [A]
  Pickup Coil Lead Connector
  Oil Pressure/Neutral Switch Terminal [B]
  Regulator/Rectifier Connectors [C]
  Sidestand Switch Connector [D]
- Remove:
  Clutch Slave Cylinder
  Clutch Hose (from the holder)

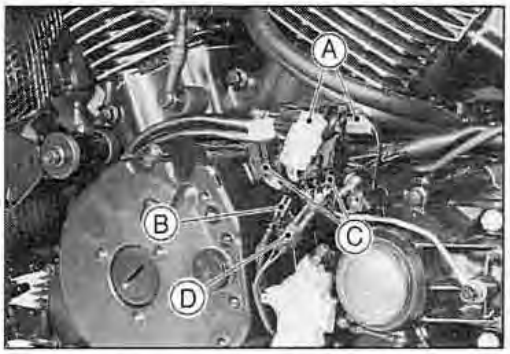

- Remove:
  Horn Bolts [A]
  Horns [B]

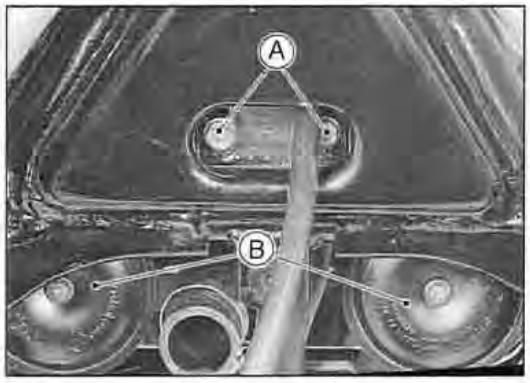

- Remove:
  Carburetor (see Fuel System chapter)
  Water Hose [A] on Front Cylinder Head
  Water Hose [B] on Rear Cylinder Head

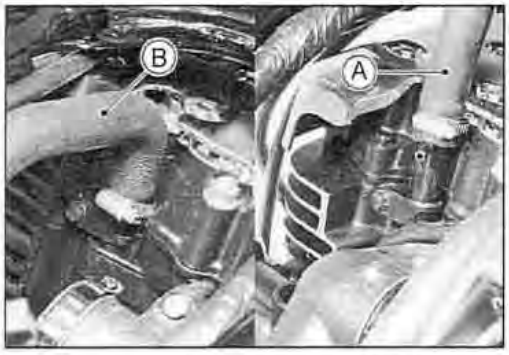

- Disconnect the engine ground terminal [A].



Engine Removal/Installation

- Support the engine with a commercially available stand [A].
- Remove:
  Front and Rear Exhaust Pipes (see Engine Top End chapter)
  Engine Mounting Bracket Bolts [B]
  Downtube Bolts [C]

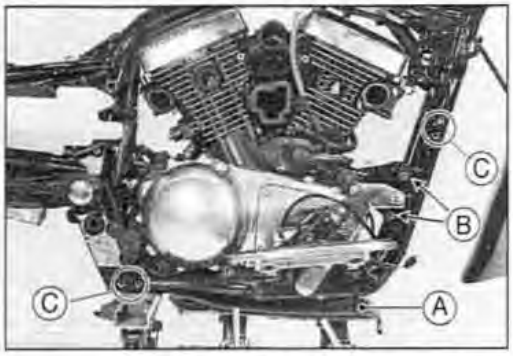

- Remove the downtube [A] with the right footpeg and rear master cylinder installed.
- Remove:
  Engine Mounting Bracket Bolts [B]
  Engine Mounting Bolts and Nuts [C]

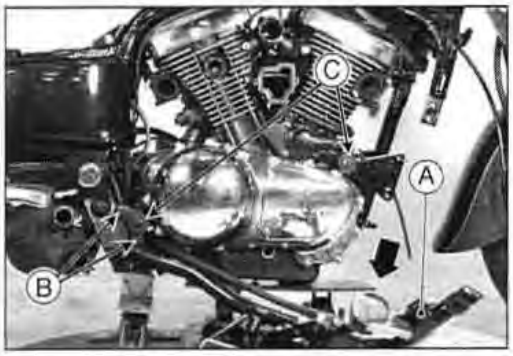

- Disengage the propeller shaft from the engine.
  - Pull off the boots [A] and push on the lockpin [B] a little with a wire.
  - Move the engine forward [C] to free it from the rear propeller shaft.

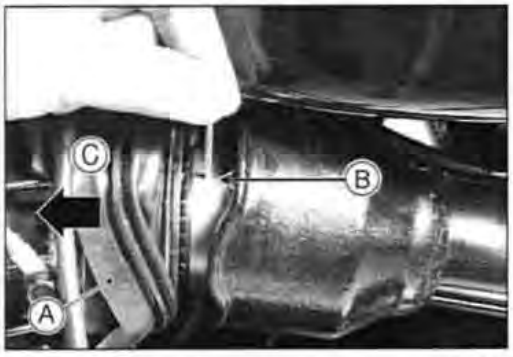

- Remove the engine [A] from the motorcycle right side.



Engine Removal/Installation

Engine Installation

- Install the rubber boots [A] on the rear end of the front bevel gear case.
- Fit the spring [B] into the front bevel gear joint.
- Put the lockpin [C] into the front bevel gear joint.

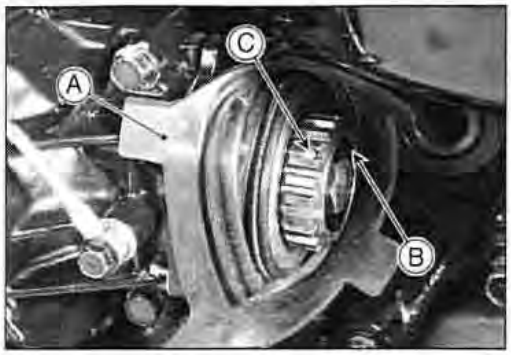

- Apply a thin coat of high temperature grease to the driven gear joint and to the propeller shaft joint.
- Push on the lockpin [A] and move back the engine to engage the front bevel gear joint with the propeller shaft joint.



- Run the brake hose [A] and the clutch hose [B] inside the frame [C] as shown.
  Clamp [D]
  Front [E]

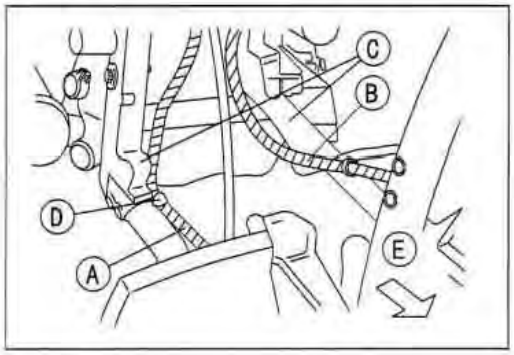

- Insert the rear mounting bolt from the left side of the engine to set the engine into its final position in the frame.
- Tighten:

Torque - Downtube Bolts: 44 N·m (4.5 kg·m, 33 ft·lb)
Engine Mounting Bolts and Nuts: 44 N·m (4.5 kg·m, 33 ft·lb)
Engine Mounting Bracket Bolts: 23 N·m (2.3 kg·m, 16.5 ft·lb)

- Run the leads, cables and hoses correctly (see Cable, Wire and Hose Routing section in the General Information chapter).
- Connect the engine ground lead [A] to the engine as shown.
  About 30° [B]

Torque - Engine Ground Terminal Bolt: 7.8 N·m (0.80 kg·m, 69 in·lb)

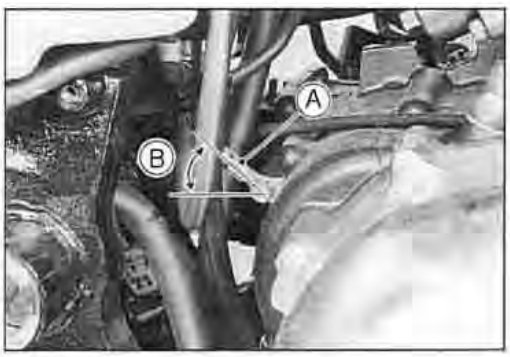

Engine Removal/Installation

- Install the removed parts (see appropriate chapters).
- Adjust the throttle cables (see Fuel System chapter).
- Fill the engine with engine oil (see Engine Lubrication System chapter).
- Fill the engine with coolant and bleed the air from the cooling system (see Cooling System chapter).
- Adjust the idling (see Fuel System chapter).
- Check the clutch operation.
- Check the brake effectiveness.

⚠ WARNING

Do not attempt to ride the motorcycle until a full brake lever or pedal is obtained by pumping the brake lever or pedal until the pads are against the disc. The brake will not function on the first application of the lever or pedal if this is not done.

Crankshaft/Transmission

Table of Contents

Exploded View....8-2
Specifications....8-6
Crankcase....8-7
  Disassembly....8-7
  Assembly....8-10
Crankshaft/Connecting Rods....8-16
  Crankshaft Installation....8-16
  Connecting Rod Removal....8-16
  Connecting Rod Installation....8-16
  Crankshaft/Connecting Rod Cleaning....8-17
  Connecting Rod Bend....8-17
  Connecting Rod Twist....8-17
  Connecting Rod Big End Side Clearance....8-17
  Connecting Rod Big End Bearing Wear....8-18
  Crankshaft Runout....8-19
  Crankshaft Main Bearing/Journal Wear....8-19
  Crankshaft Side Clearance....8-20
Starter Clutch....8-21
  Removal....8-21
  Installation....8-21
  Disassembly....8-21
  Assembly....8-22
  Inspection....8-22
Starter Torque Limiter....8-23
  Removal....8-23
  Inspection....8-23
Water Pump Idle Shaft Holder....8-24
  Removal....8-24
  Installation....8-24
Primary Gear....8-25
  Removal....8-25
  Installation....8-25
Transmission....8-26
  Rear Shift Pedal Removal....8-26
  Rear Shift Pedal Installation....8-26
  Front Shift Pedal Removal....8-26
  Front Shift Pedal Installation....8-27
  External Shift Mechanism Removal....8-27
  External Shift Mechanism Installation....8-27
  External Shift Mechanism Inspection....8-28
  Transmission Removal....8-28
  Transmission Installation....8-28
  Shift Drum Disassembly/Assembly....8-29
  Transmission Disassembly....8-30
  Transmission Assembly....8-30
  Shift Fork Bending....8-32
  Shift Fork/Gear Groove Wear....8-33
  Shift Fork Guide Pin/Drum Groove Wear....8-33
  Gear Dog and Gear Dog Hole Damage....8-33
Ball Bearing, Needle Bearing, and Oil Seal....8-34
  Ball Bearing and Outer Race Replacement....8-34
  Ball and Needle Bearing Wear....8-34
  Oil Seal Inspection....8-34

Exploded View

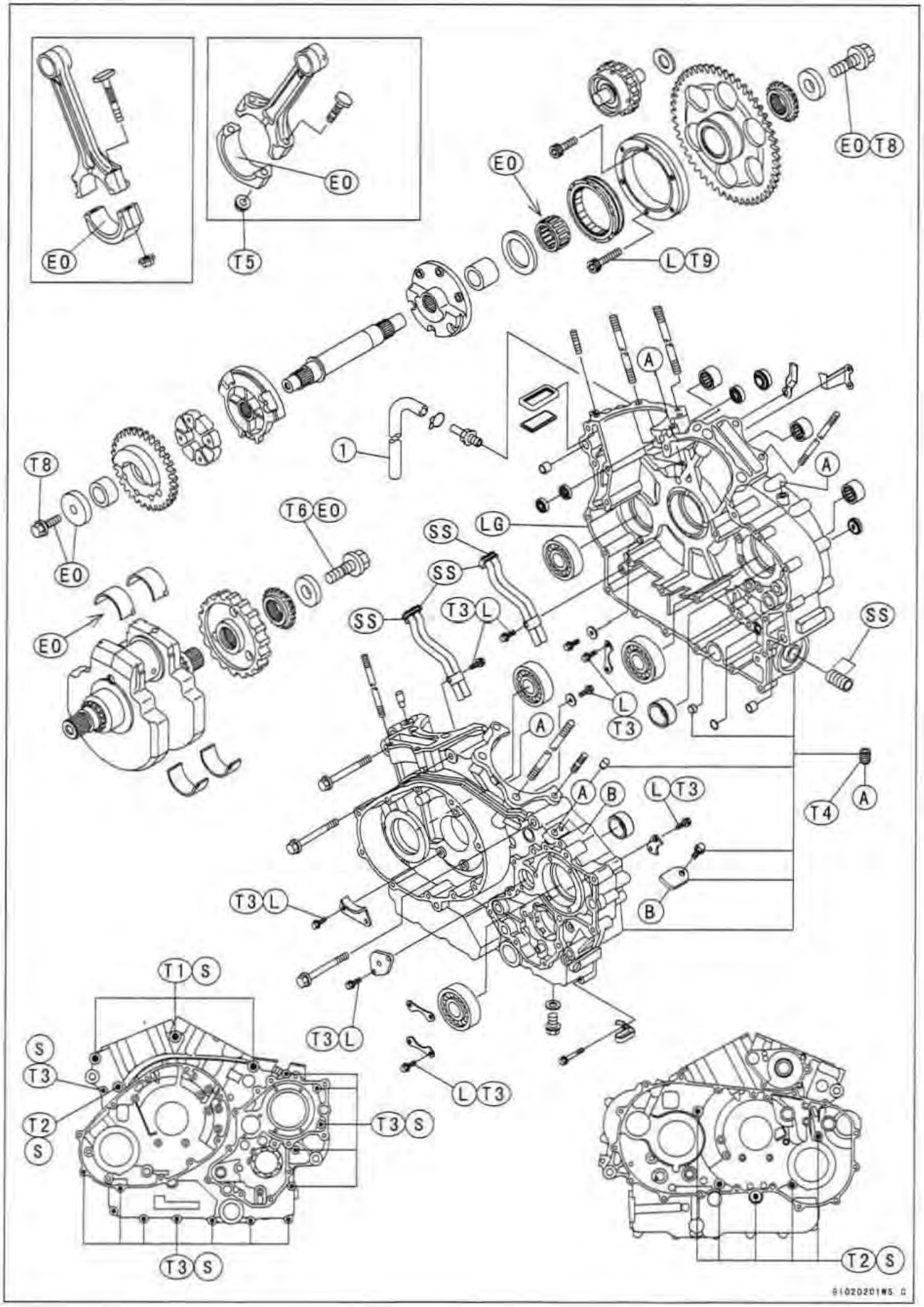

Exploded View

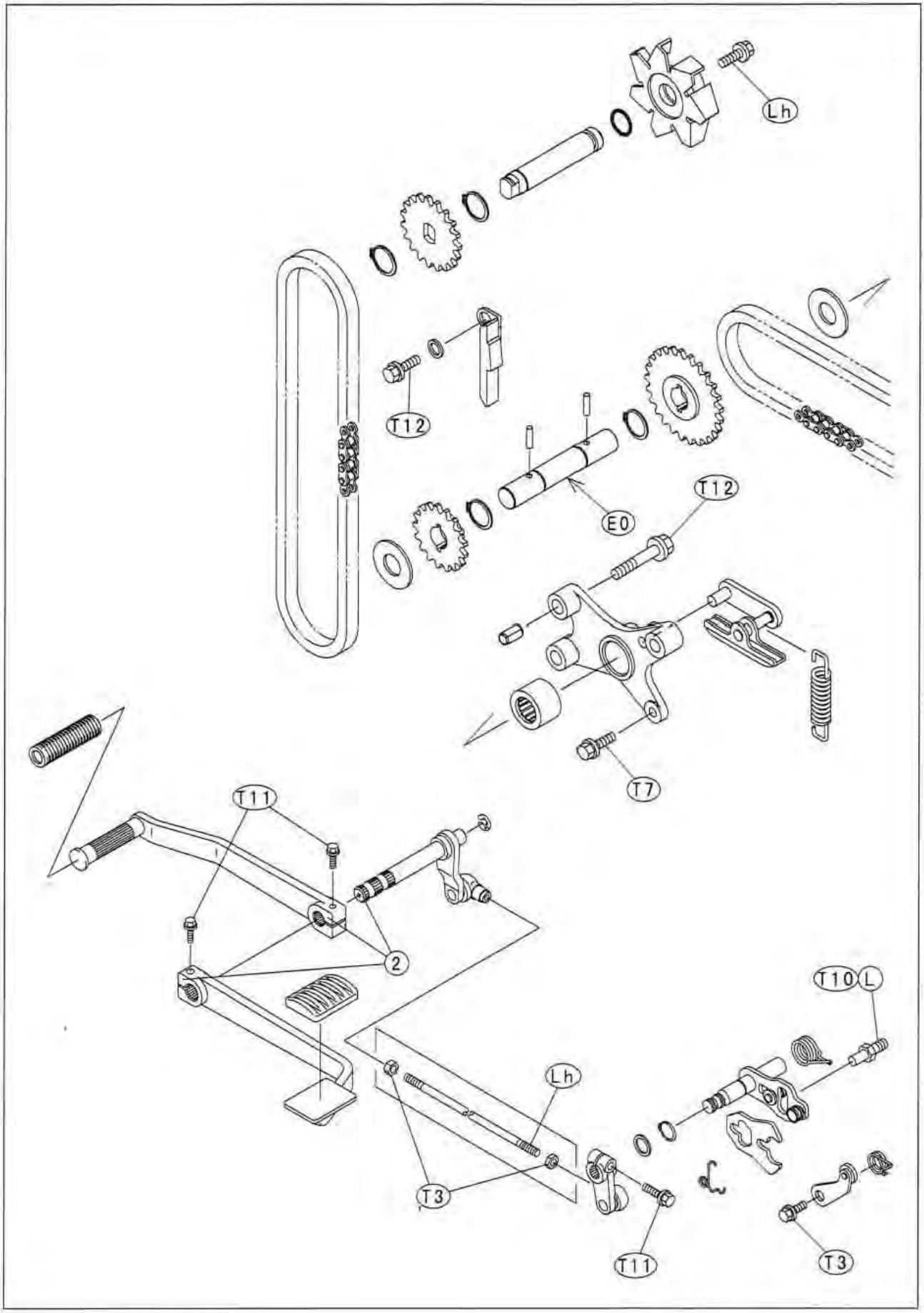

Exploded View

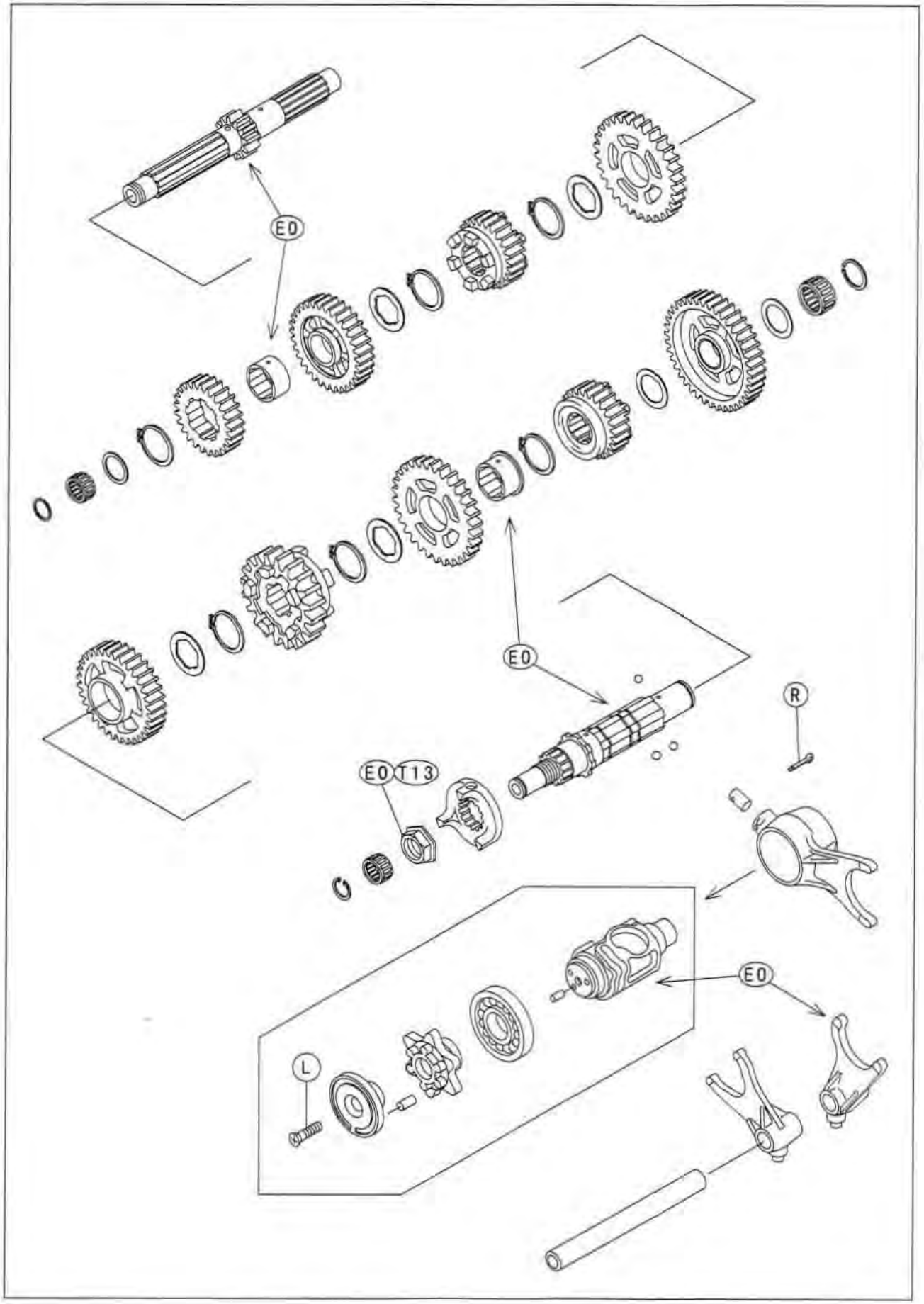

Exploded View

1. Water Pump Drainage Outlet Hose
2. Align the marks.
EO: Apply engine oil.
L: Apply a non-permanent locking agent.
LG: Apply liquid gasket (Kawasaki Bond: 92104-1003).
Lh: Left-hand Threads
R: Replacement Parts
S: Follow the specific tightening sequence.
SS: Apply silicone sealant (Kawasaki Bond: 56019-120).
T1: 39 N·m (4.0 kg·m, 29 ft·lb)
T2: 21 N·m (2.1 kg·m, 15.0 ft·lb)
T3: 9.8 N·m (1.0 kg·m, 87 in·lb)
T4: 3.4 N·m (0.35 kg·m, 30 in·lb)
T5: 59 N·m (6.0 kg·m, 43 ft·lb)
T6: 145 N·m (15.0 kg·m, 110 ft·lb)
T7: 2.9 N·m (0.30 kg·m, 26 in·lb)
T8: 85 N·m (8.7 kg·m, 63 ft·lb)
T9: 15 N·m (1.5 kg·m, 11.0 ft·lb)
T10: 20 N·m (2.0 kg·m, 14.5 ft·lb)
T11: 12 N·m (1.2 kg·m, 104 in·lb)
T12: 7.8 N·m (0.80 kg·m, 69 in·lb)
T13: 226 N·m (23.0 kg·m, 166 ft·lb)

8-6 CRANKSHAFT/TRANSMISSION

Specifications

Item		Standard	Service Limit
Crankshaft, Connecting Rods:			
Connecting rod bend		– – –	TIR 0.2/100 mm
Connecting rod twist		– – –	TIR 0.2/100 mm
Connecting rod big end side clearance		0.16 ~ 0.46 mm	0.7 mm
Connecting rod big end bearing insert/crankpin clearance		0.026 ~ 0.057 mm	0.10 mm
Crankpin diameter:		54.981 ~ 55.000 mm	54.97 mm
Marking	None	54.981 ~ 54.991 mm	– – –
	○	54.992 ~ 55.000 mm	– – –
Connecting rod big end bore diameter:		58.000 ~ 58.020 mm	– – –
Marking	None	58.000 ~ 58.010 mm	– – –
	○	58.011 ~ 58.020 mm	– – –
Connecting rod big end bearing insert thickness:			
	Brown	1.483 ~ 1.487 mm	– – –
	Black	1.487 ~ 1.491 mm	– – –
	Blue	1.491 ~ 1.495 mm	– – –

Connecting rod big end bearing insert selection:

Con-rod Big End Bore Diameter Marking	Crankpin Diameter Marking	Bearing Insert	
		Size Color	Parts Number
None	○	Brown	92028-1476
None	None	Black	92028-1475
○	○		
○	None	Blue	92028-1474

Crankshaft side clearance	0.05 ~ 0.55 mm	0.75 mm
Crankshaft web length	96.85 ~ 96.95 mm	96.6 mm
Crankshaft runout	TIR 0.02 mm or less	TIR 0.05 mm
Crankshaft main bearing/journal clearance	0.025 ~ 0.052 mm	0.10 mm
Crankshaft main journal diameter	54.986 ~ 55.000 mm	54.96 mm
Crankcase main bearing bore diameter	55.025 ~ 55.038 mm	55.07 mm
Transmission		
Shift fork ear thickness	5.9 ~ 6.0 mm	5.8 mm
Gear shift fork groove width	6.05 ~ 6.15 mm	6.3 mm
Shift fork guide pin diameter	7.9 ~ 8.0 mm	7.8 mm
Shift drum groove width	8.05 ~ 8.20 mm	8.3 mm

Special Tools - **Damper Cam Holder: 57001-1025**
Flywheel Holder: 57001-1410
Gear Holder: 57001-1015
Outside Circlip Pliers: 57001-144
Bearing Driver Set: 57001-1129

Sealant - **Kawasaki Bond (Liquid Gasket-Black): 92104-1003**
Kawasaki Bond (Silicone Sealant): 56019-120

Crankcase

Disassembly

- Remove:
  Engine (see Engine Removal/Installation chapter)
  Cylinder Blocks (see Engine Top End chapter)
  Pistons
  Clutch (see Clutch chapter)
  Front Gear Case (see Final Drive chapter)
  Alternator Inner Cover (see Electrical System chapter)
- Remove the shift shaft [A] while pushing [B] the shift mechanism arm [C] towards the shift shaft.
- Unscrew the bolt and remove the gear set lever [D] and its spring.

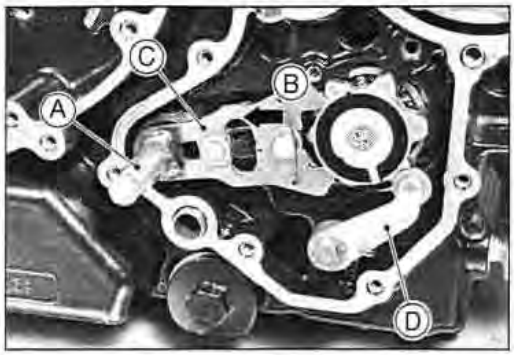

- Remove the retainer and needle bearing of the output shaft.
- Remove the clutch push rod guide [C] and bolts, and crankcase bearing retainers and bolts.
- Insert a bolt (ϕ12 mm, L 100 mm) [D] into the engine mounting bolt hole.
- Unscrew the damper cam nut [A] using the damper cam holder [B] (special tool) and deep socket wrench.

Special Tool - Damper Cam Holder: 57001-1025



- Pull the starter clutch gear [A] out of the starter clutch (The starter clutch gear can be removed with the engine in the frame).

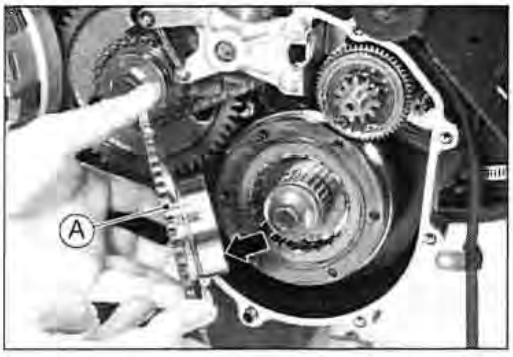

- Loosen the starter clutch bolt [A] while holding the primary gear bolt [B].
- Take out the torque limiter [C].

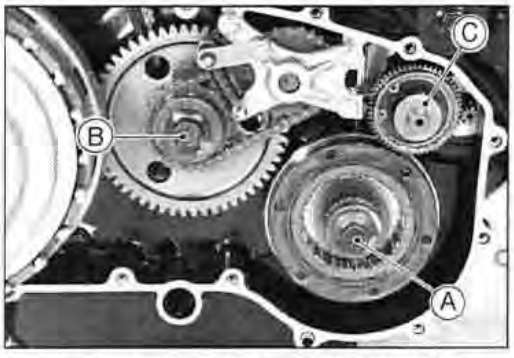

- Remove the following from the right end of the balancer shaft.
  Starter Clutch Bolt [A]
  Washer [B]
  Collar [C]
  Needle Bearing [D]
  Copper Washer [E]
  Starter Clutch [F]

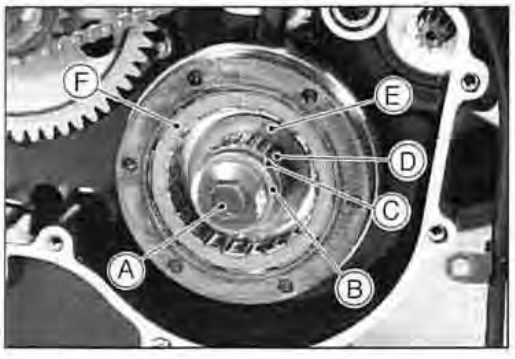

Crankcase

- Loosen the primary gear bolt [A] while holding the alternator rotor steady with the flywheel holder (special tool) (The primary gear can be removed with the engine in the frame).
  Primary Gear [B]

  Special Tool - Flywheel Holder: 57001-1410



- Loosen the left balancer gear bolt [A] by using the flywheel holder [B]. The left balancer gear bolt has right-hand threads.

  Special Tool - Flywheel Holder: 57001-1410
- Remove the alternator rotor bolt [C].

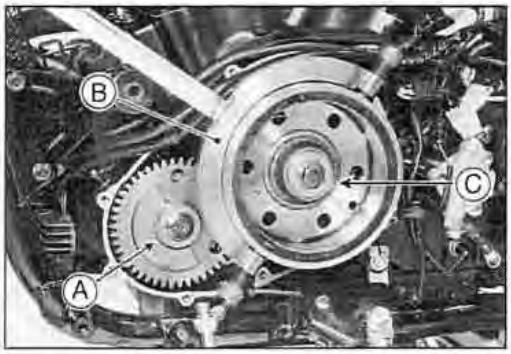

- Take the alternator rotor with the washer and ratchet off the crankshaft.
- Remove the inside stator coil (see Electrical System chapter).
- Remove the left balancer gear bolt [A], and take the balancer gear [B], washer [C], and left balancer [D] off the balancer shaft as a set.



- Remove the following from the left crankcase with the cylinder head removed.
  Front Chain Holder [A]
  Lower Chain Guide [B]
  Rear Chain Guide [C]
  Front Camshaft Chain [D]
  Front [E]

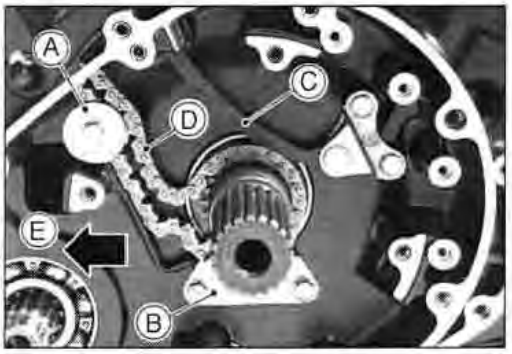

- Remove the idle shaft holder [A] and chain guide [B] from the right crankcase (The idle shaft holder can be removed with the engine in the frame).



Crankcase

- Remove the primary gear bolt [A] and take out the water pump drive sprocket [B] and idle shaft sprocket [C] as a set.
  Chain [D]

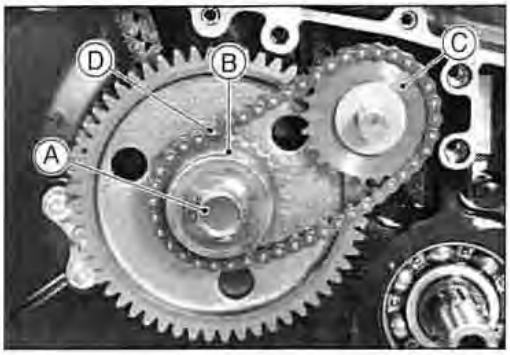

- Pull the primary gear [A] out of the crankshaft, and take the idle shaft [B] out of the crankcase. The idle shaft has two pins [C].



- Remove the following with the cylinder head removed.
  Idle Shaft Sprocket [A] (with flat washer) from Water Pump Chain [B]
  Rear Camshaft Chain [C]
  Lower Chain Guide [D]
  Rear Chain Guide [E]
  Front [F]

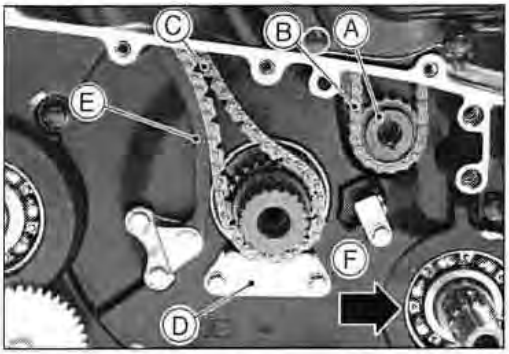

- Remove the starter motor bolts [B] and the motor [A] out of the crankcase.



- Remove the right crankcase bolts.
  8 mm Bolts (5) [A]
  Be sure to remove this bolt [B]

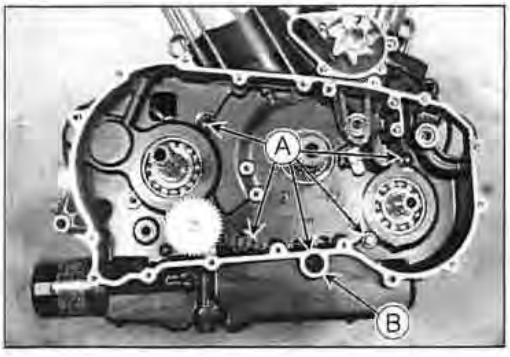

Crankcase

- Remove all the left crankcase bolts in the order listed.
  - ⌀6 mm Bolts (14) [A]
  - ⌀8 mm Bolt (1) [B]
  - ⌀10 mm Bolts (3) [C]



- Using the pry points, split the crankcase halves.
  - Pry Point (Front) [A]
  - Pry Point (Rear) [B]
- Turn the left crankcase down.
- Lift off the right crankcase.
- Remove the following from the left crankcase.
  - Crankshaft
  - Transmission Gear Assy and Shift Drum as a set
  - Balancer Shaft

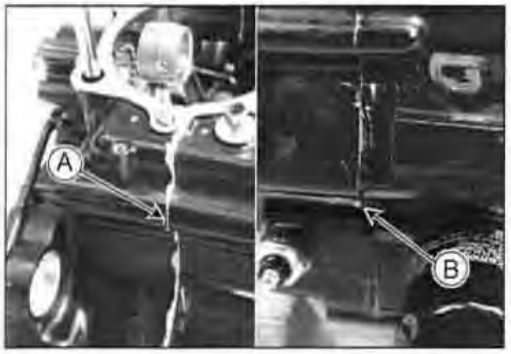

- Pull the water pump sprocket [A] with its chain and shaft [B] out of the inside of the right crankcase.

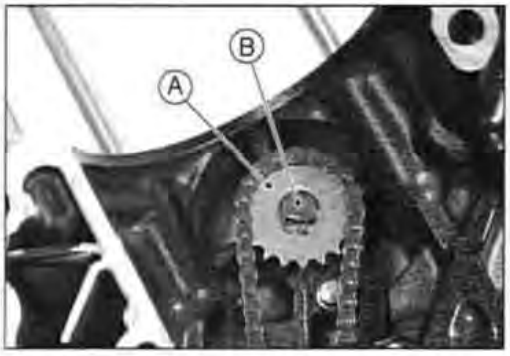

Assembly

CAUTION

The right and left crankcase halves are machined at the factory in the assembled state, so the crankcase halves must be replaced as a set.

- With a high-flash point solvent, clean off the mating surfaces of the crankcase halves and wipe dry.
- Using compressed air, blow out the oil passages in the crankcase halves.
- Press and insert the new ball bearings by using the bearing driver set (special tool).

Crankcase

- Install the bearing retainers.
- Apply a non-permanent locking agent to the bearing retainer bolts and tighten them to the specified torque.

Special Tool - Bearing Driver Set: 57001-1129

Bearings [A]
Bearing Retainer [B]
Left Crankcase [C]

Torque - Bearing Retainer Bolt: 9.8 N·m (1.0 kg·m, 87 in·lb)

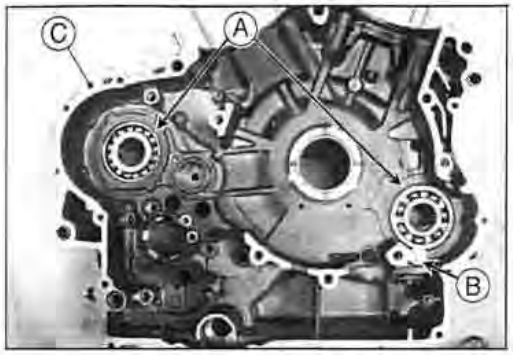

- Install:

Bearings [A]
Bearing Retainers [B]
Right Crankcase [C]



- Apply a non-permanent locking agent to the shift shaft return spring pin [A], and tighten it to the specified torque.

Torque - Shift Shaft Return Spring Pin: 20 N·m (2.0 kg·m, 14.5 ft·lb)

- Apply silicone sealant to the threads of the oil pressure switch [B], and tighten it to the specified torque.

Torque - Oil Pressure Switch: 15 N·m (1.5 kg·m, 11.0 ft·lb)

- Install new water pump shaft bearings and oil seal (see Cooling System chapter).
- Tighten the engine oil drain plug to the specified torque.

Torque - Engine Oil Drain Plug: 20 N·m (2.0 kg·m, 14.5 ft·lb)



- Install the transmission assy as a set (see this chapter).
- Set the gear set lever to the neutral position.

Shift Drum Cam [A]
Gear Set Lever [B]
Neutral Position [C]

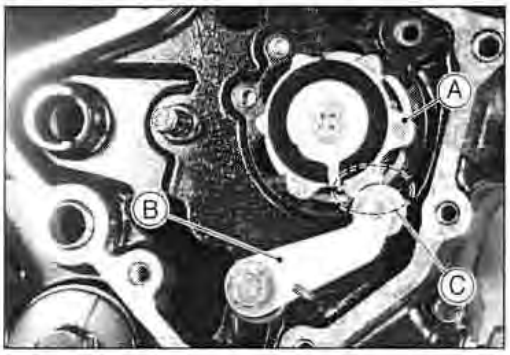

- Apply engine oil to the transmission gears, ball bearings, shift drum, and crankshaft main bearing.
- Install:

Oil Pipe and Breather Pipes (see Engine Lubrication System chapter)
Crankshaft (see this chapter)

Crankcase

● Check to see that the following parts are in place in the left crankcase.
Transmission Assy [A]
Shift Fork [B]
Shift Rod [C]
Shift Drum [D]
Crankshaft [E]
Front Connecting Rod [F] (right)
Rear Connecting Rod [G] (left)
Balancer Shaft [H]
Dowel Pins [J]
O-ring [K]
Oil Separator [L]
Front [M]

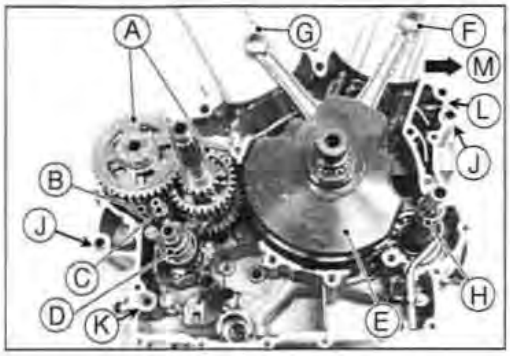

Install the balancer shaft [A] so that the flanged side [B] faces downward (toward the left crankcase).

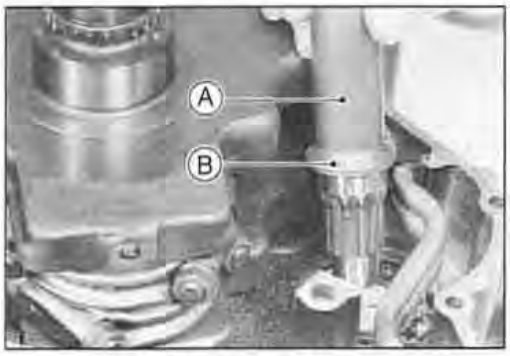

● Check to see that the following parts are in place in the right crankcase.
Oil Pump [A]
Dowel Pins [B]
Separator [C]
Oil Pipe [D]
Breather Pipe [E]

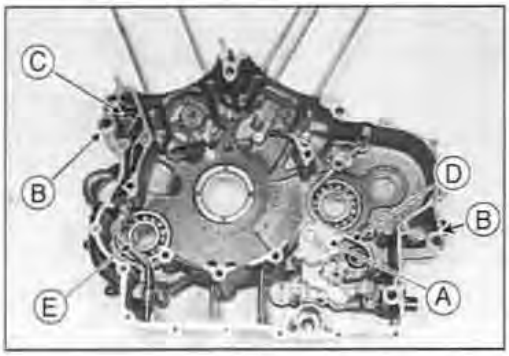

Apply liquid gasket [A] to the mating surface of the right crankcase.
Sealant - Kawasaki Bond (Liquid Gasket-Black): 92104-1003

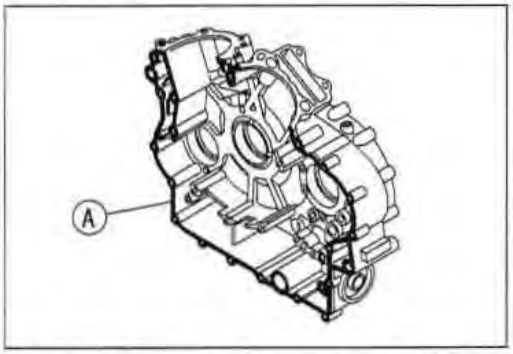

Also, apply liquid gasket [A] to the right crankcase mating surface around the hole of the oil screen.

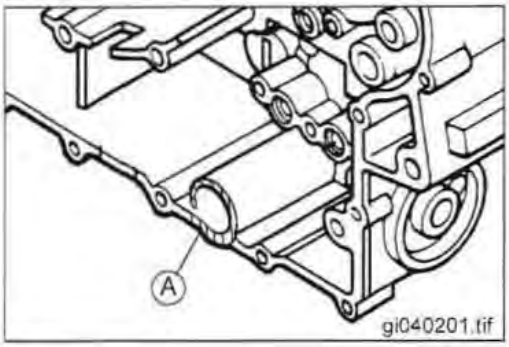

Crankcase

- Tighten the crankcase bolts as follows.
  - Lightly tighten all the bolts to a snug fit.
  - Tighten the **8 mm** and **10 mm** bolts in the order shown, and then tighten the **6 mm** bolts to the specified torque.

Torque - 8 mm Crankcase Bolts (1 ~ 6): 21 N·m (2.1 kg·m, 15 ft·lb)
10 mm Crankcase Bolts (7 ~ 9): 39 N·m (4.0 kg·m, 29 ft·lb)
6 mm Crankcase Bolts: 9.8 N·m (1.0 kg·m, 87 in·lb)

Front [A]

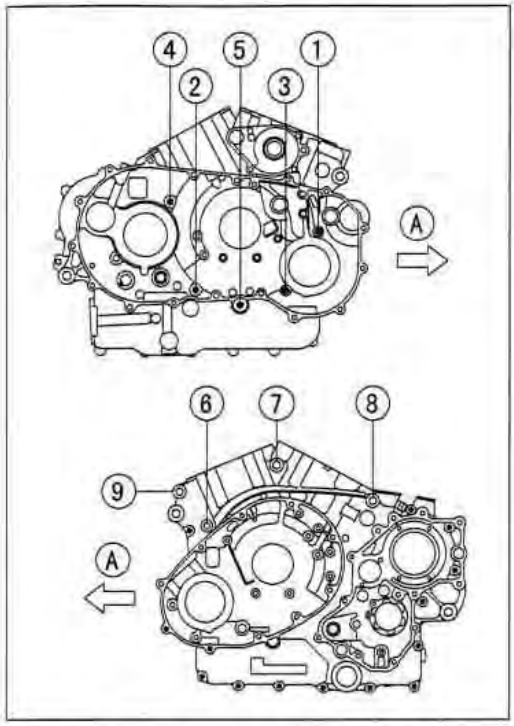

- After tightening all the crankcase bolts, check the following items.
  - Turn the right crankcase down, and check that the drive shaft and output shaft turn freely.
  - Be sure the positive neutral finder operates properly: While spinning the output shaft using an air impact wrench, gears shift smoothly from the 1st, 2nd · · · 5th gear, and 5th, 4th · · · 1st. When the output shaft stays still, the gear can be shifted to only the 1st gear or neutral. It should not be shifted to the 2nd gear or other higher gear positions.

Output Shaft [A]
Shift Drum [B]
Spin the shaft fast [C].

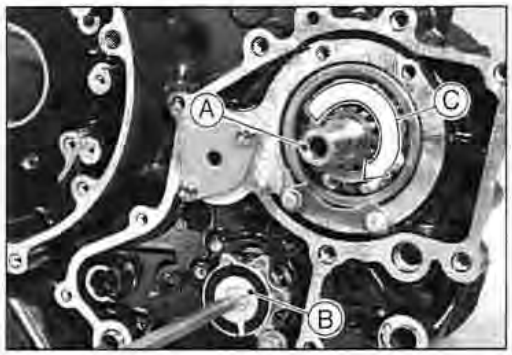

- Install the balancer dampers [A] so that each damper hole [B] is positioned alternately.

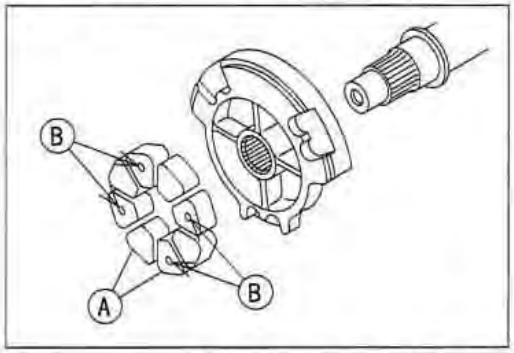

- Install the left balancer [A] on the balancer shaft in the engine left side while fitting the alignment tooth [B] onto the alignment notch [C] of the splines.

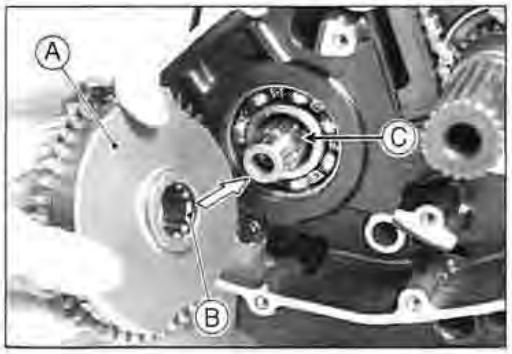

Crankcase

- Install the camshaft chain and chain guide in the engine left side.
- Turn the crankshaft counterclockwise [A] and align the alignment tooth [B] with the middle of the crankcase rib [C]. This makes the front piston set to its top dead center.



- Install the crankshaft balancer gear [A] while fitting the alignment notch of the splines onto the alignment tooth.
- Install the left balancer [B] while aligning the balancer gear marks (line mark) [C] with the front piston on its top dead center.
- Install (see Electrical System chapter):
  Inside Stator Coil
  Alternator Rotor



When the front piston is set on its top dead center, balancer marks [A] should align.
  Top Mark for Rear Piston [B]
  Top Mark for Front Piston [C]

- Apply engine oil to the threads of the left balancer gear bolt, starter clutch bolt, and alternator rotor bolt.
- Tighten:

Torque - Left Balancer Gear Bolt,Starter Clutch Bolt: 85 N·m (8.7 kg·m, 63 ft·lb)
Alternator Rotor Bolt: 78 N·m (8.0 kg·m, 57 ft·lb)

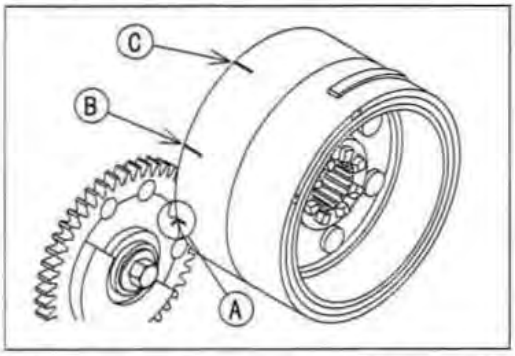

- Install the following in the engine right side.
  Camshaft Chain and Chain Guides
  Starter Clutch (Right Balancer)
  Washer [A] and Idle Shaft Sprocket [B]

Non-permanent Locking Agent - Camshaft Chain Guide Blots

Torque - Camshaft Chain Guide Bolts: 9.8 N·m (1.0 kg·m, 87 in·lb)

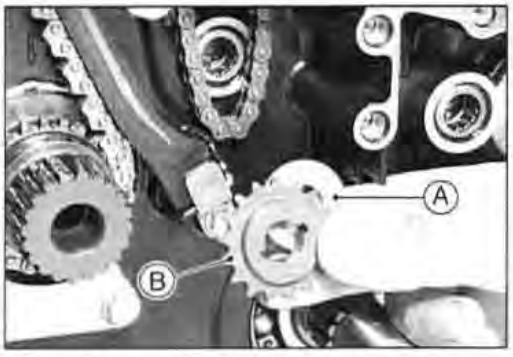

Install the primary gear [A] with the boss [B] facing toward the engine inside.



Crankcase

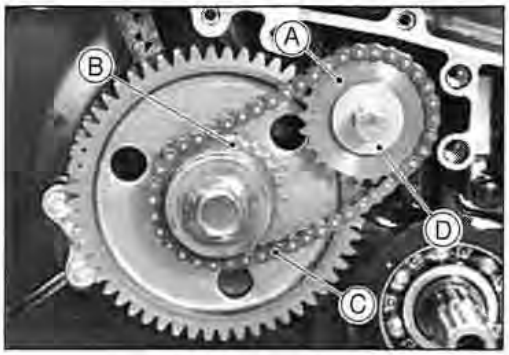

○ Install:
Water Pump Idle Shaft
Idle Shaft Sprocket [A]
Water Pump Drive Sprocket [B] and Chain [C]
Washer [D]
○ Install two pins into the water pump idle shaft.
○ Fit the pins into the slots of the idle shaft drive sprocket boss.

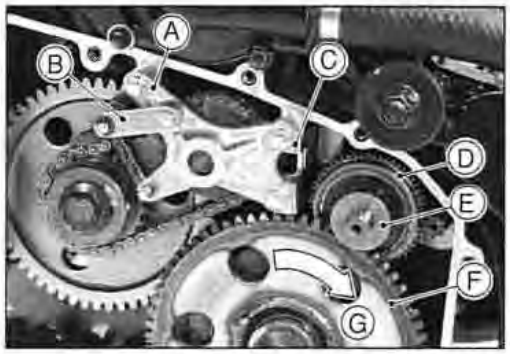

○ Install:
Idle Shaft Holder [A] and Water Pump Chain Guide [B]
Lock Washer [C]
Torque Limiter [D]
Washer [E]
Starter Clutch Gear [F]
Turn clockwise [G].

Torque - Water Pump Chain Guide Bolt, Idle Shaft Holder Bolts: 7.8 N·m (0.80 kg·m, 69 in·lb)

● Install:
Shift Mechanism (see this chapter)
Damper Cam and Front Gear Case (see Final Drive chapter)
Clutch (see Clutch chapter)
Water Pump (see Cooling System chapter)
Clutch Cover
Engine Top End (see Engine Top End chapter)
Alternator Inner Cover (see Electrical System chapter)
Alternator Cover
Alternator Outer Cover

Crankshaft/Connecting Rods

Crankshaft Installation

- The left shaft [B] of the crankshaft [A] is longer than the right shaft [C].

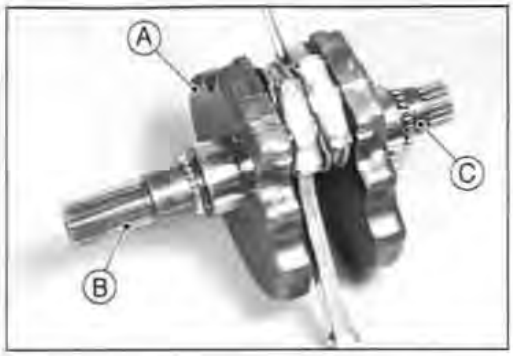

Connecting Rod Removal

- Remove the crankshaft.
- Remove the connecting rods from the crankshaft [A].

NOTE

Mark and record the locations of the connecting rods [B] and their big end caps [C] so that they can be installed in their original positions.

- Remove the connecting rod big end nuts, and take off the rod and cap with the bearing inserts.

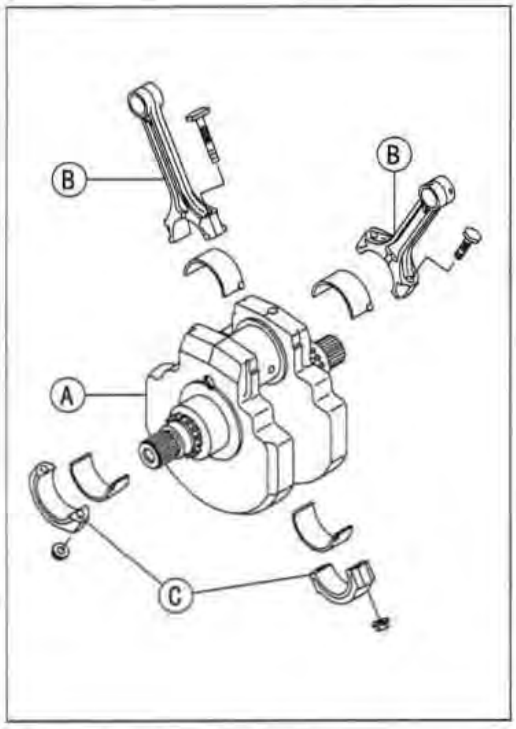

Connecting Rod Installation

CAUTION

To minimize vibration, the connecting rods should have the same weight mark.

Big End Cap [A]
Connecting Rod [B]
Weight Mark, Alphabet [C]
Diameter Mark (Around Weight Mark) [D]: "○" or no mark

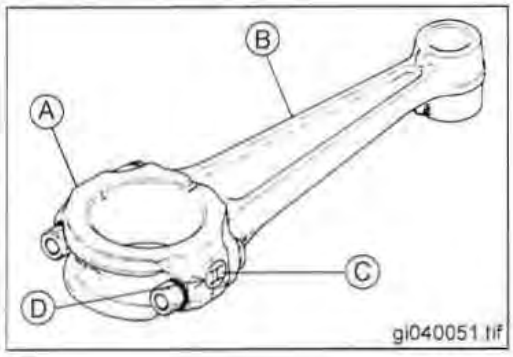

CAUTION

If the connecting rods, bearing inserts, or crankshaft are replaced with new ones, select the bearing insert and check clearance with a plastigage before assembling engine to be sure the correct bearing inserts are installed.

- Apply engine oil to the big end bearing inserts.
- Tighten the big end nuts to the specified torque.

Torque - Connecting Rod Big End Nuts: 59 N·m (6.0 kg·m, 43 ft·lb)

Crankshaft/Connecting Rods

Crankshaft/Connecting Rod Cleaning

- After removing the connecting rods from the crankshaft, clean them with a high-flash point solvent.
- Blow the crankshaft oil passages with compressed air to remove any foreign particles or residue that may have accumulated in the passages.

Connecting Rod Bend

- Remove the connecting rod big end bearing inserts, and reinstall the connecting rod big end cap.
- Select an arbor [A] of the same diameter as the connecting rod big end, and insert the arbor through the connecting rod big end.
- Select an arbor of the same diameter as the piston pin and at least 100 mm long, and insert the arbor [B] through the connecting rod small end.
- On a surface plate, set the big-end arbor on V block [C].
- With the connecting rod held vertically, use a height gage to measure the difference in the height of the arbor above the surface plate over a 100 mm length to determine the amount of connecting rod bend.

★ If connecting rod bend exceeds the service limit, the connecting rod must be replaced.

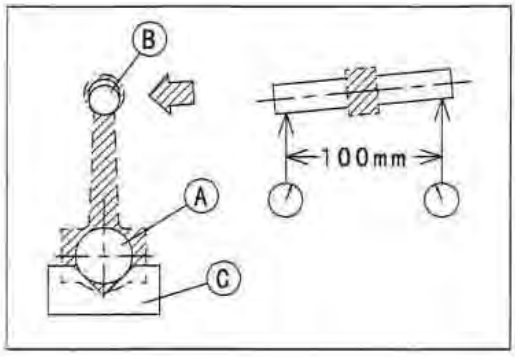

Connecting Rod Bend
Service Limit: TIR 0.2/100 mm

Connecting Rod Twist

- With the big-end arbor [A] still on V block [C], hold the connecting rod horizontally and measure the amount that the arbor [B] varies from being parallel with the surface plate over a 100 mm length of the arbor to determine the amount of connecting rod twist.

★ If connecting rod twist exceeds the service limit, the connecting rod must be replaced.

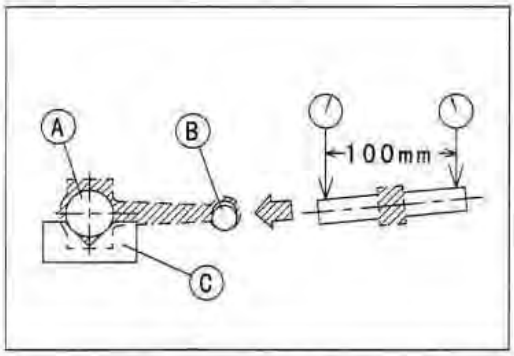

Connecting Rod Twist
Service Limit: TIR 0.2/100 mm

Connecting Rod Big End Side Clearance

- Measure connecting rod big end [A] side clearance [B].
- Insert a thickness gage between the big end and either crank web to determine clearance.

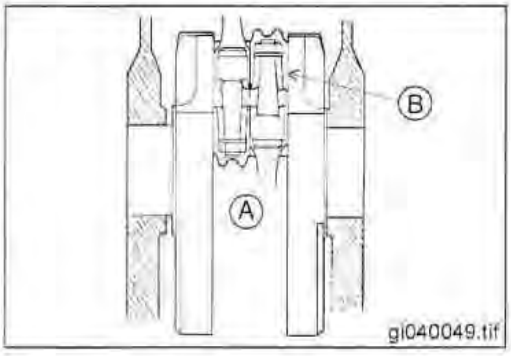

Connecting Rod Big End Side Clearance
Standard: 0.16 ~ 0.46 mm
Service Limit: 0.7 mm

★ If the clearance exceeds the service limit, replace the connecting rod with new one and then check clearance again. If clearance is too large after connecting rod replacement, the crankshaft also must be replaced.

Crankshaft/Connecting Rods

Connecting Rod Big End Bearing Wear

● Measure the bearing insert/crankpin [A] clearance with plastigage [B].
○ Tighten the big end nuts to the specified torque.

Torque - Connecting Rod Big End Nuts: 59 N·m (6.0 kg·m, 43 ft·lb)

NOTE

○ *Do not move the connecting rod and crankshaft during clearance measurement.*

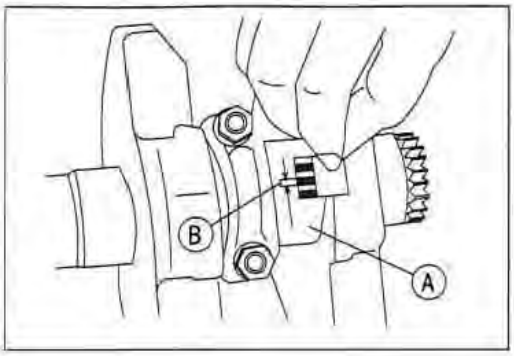

Connecting Rod Big End Bearing/Crankpin Clearance
Standard: 0.026 ~ 0.057 mm
Service Limit: 0.10 mm

★ If clearance is within the standard, no bearing insert replacement is required.
★ If clearance is between 0.057 mm and the service limit (0.10 mm), replace the bearing inserts [A] with inserts painted blue [B]. Check insert/crankpin clearance with plastigage. The clearance may exceed the standard slightly, but it must not be less than the minimum in order to avoid bearing seizure.
★ If clearance exceeds the service limit, measure the diameter of the crankpin.

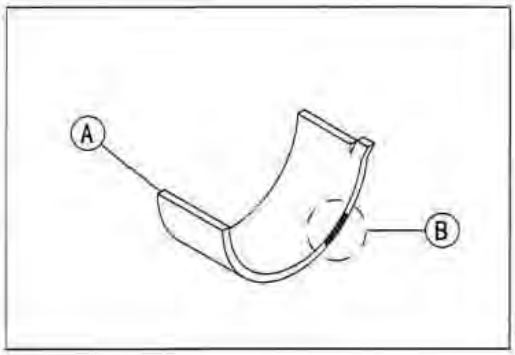

Crankpin Diameter
Standard: 54.981 ~ 55.000 mm
Service Limit: 54.97 mm

★ If the crankpin has worn past the service limit, replace the crankshaft with a new one.

★ If the measured crankpin diameter [A] is not less than the service limit, but does not coincide with the original diameter marking on the crankshaft, make a new mark on it.

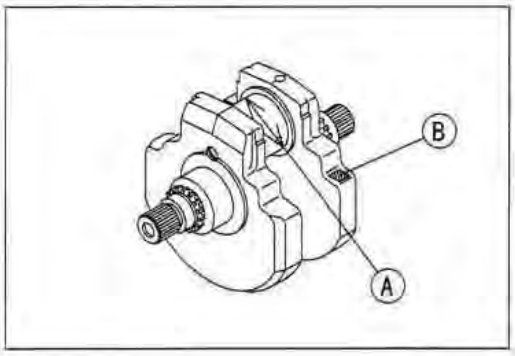

Crankpin Diameter Marks
None: 54.981 ~ 54.991 mm
○: 54.992 ~ 55.000 mm
Crankpin Diameter Mark: "○" mark or no mark [B]

● Measure the connecting rod big end inside diameter, and mark each connecting rod big end in accordance with the inside diameter.
● Tighten the big end nuts to the specified torque.

Torque - Connecting Rod Big End Nuts: 59 N·m (6.0 kg·m, 43 ft·lb)

NOTE

○ *The mark already on the big end should almost coincide with the measurement because of little wear.*

Crankshaft/Connecting Rods

Connecting Rod Big End Inside Diameter Marks

None: **58.000 ~ 58.010 mm**

○: **58.011 ~ 58.020 mm**

Big End Cap [A]
Connecting Rod [B]
Weight Mark, Alphabet [C]
Diameter Mark (Around Weight Mark) [D]: "○" or no mark

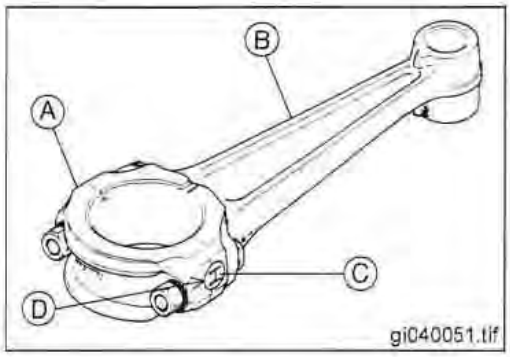

- Select the proper bearing insert [A] in accordance with the combination of the connecting rod and crankshaft coding.
  Size Color [B]

Big End Bearing Insert Selection

Con-rod Big End Bore Diameter Marking	Crankpin Diameter Mark	Bearing Insert	
		Size Color	Part Number
None	○	Brown	92028-1476
None	None	Black	92028-1475
○	○		
○	None	Blue	92028-1474

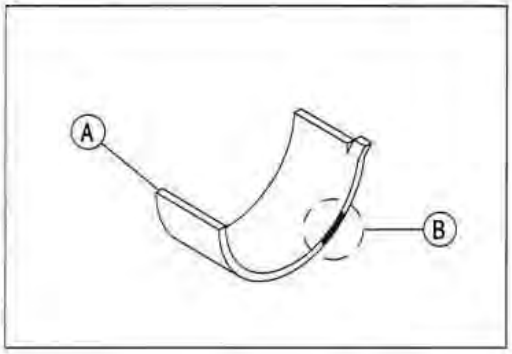

- Install the new inserts in the connecting rod and check insert/crankpin clearance with the plastigage.

Crankshaft Runout

- Measure the crankshaft runout.

★ If the measurement exceeds the service limit, replace the crankshaft.

Crankshaft Runout

Standard: **TIR 0.02 mm**

Service Limit: **TIR 0.05 mm**

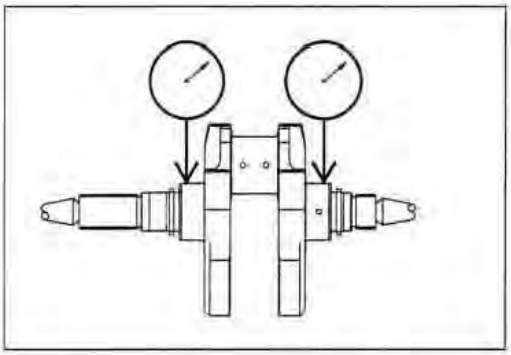

Crankshaft Main Bearing/Journal Wear

- Measure the diameter [A] of the crankshaft main journal.

Crankshaft Main Journal Diameter

Standard: **54.986 ~ 55.000 mm**

Service Limit: **54.96 mm**

★ If any journal has worn past the service limit, replace the crankshaft with a new one.

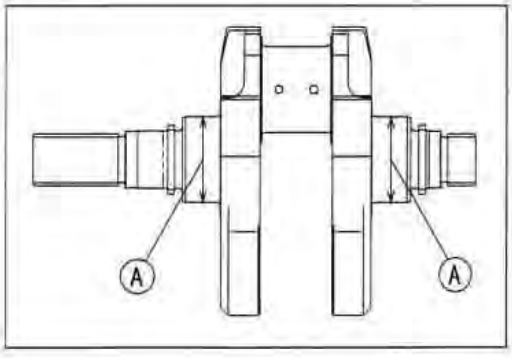

Crankshaft/Connecting Rods

● Measure the main bearing bore diameter [A] in the crankcase halves.

Crankcase Main Bearing Bore Diameter
Standard: 55.025 ~ 55.038 mm
Service Limit: 55.07 mm

★ If they are any signs of seizure, damage, or excessive wear, replace the crankcase halves as a set.

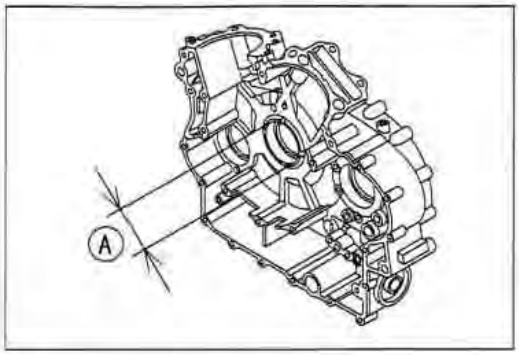

Crankshaft Side Clearance

● Measure the crankshaft side clearance.

Crankshaft Side Clearance
Standard: 0.05 ~ 0.55 mm
Service Limit: 0.75 mm

Crankshaft [A]
Crankcase [B]
Clearance [C]

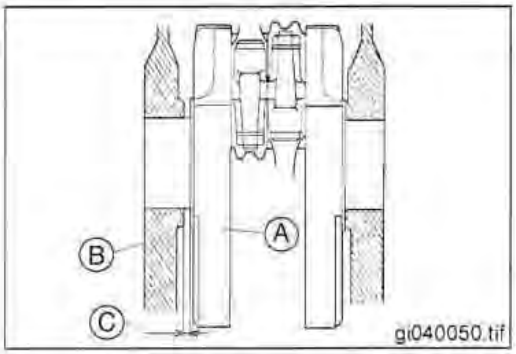

★ If the clearance is greater than the service limit, measure the crankshaft web length [A] to see whether the crankshaft or the crankcase is faulty.

Crankshaft Web Length
Standard: 96.85 ~ 96.95 mm
Service Limit: 96.6 mm

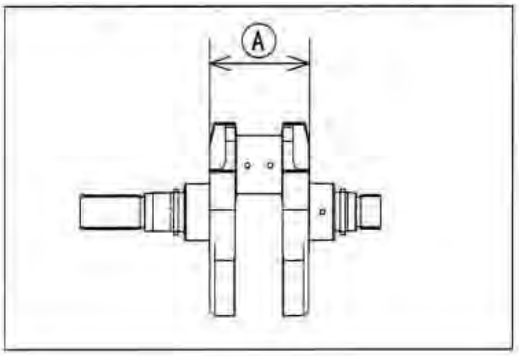

★ If the length measurement is smaller than the service limit, replace the crankshaft. Otherwise, replace the crankcase halves as a set.

CAUTION

The right and left crankcase halves are machined at the factory in the assembled state, so they must be replaced as a set.

Starter Clutch

Removal

- Remove the clutch cover (see Clutch chapter).
- Unscrew the starter clutch bolt [A] while holding the primary gear bolt [B].
- Pull the starter clutch gear and starter clutch along with the right balancer as a set off the balancer shaft.
- Remove the torque limiter [C].

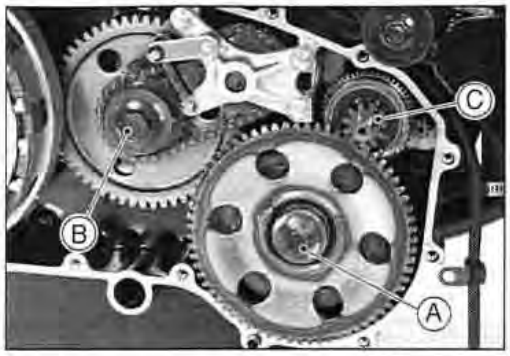

Installation

- Fit the alignment notch [A] of the splines of the right balancer [B] onto the alignment tooth of the balancer shaft.

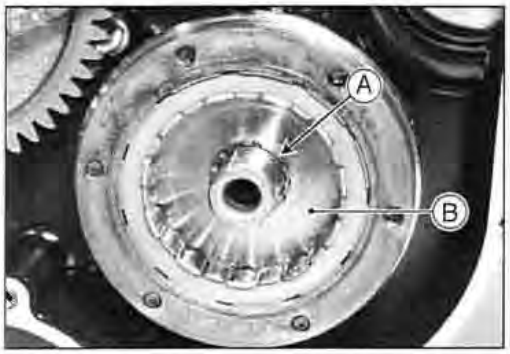

- Install the collar [A], copper washer [B], and needle bearing [C] in the order listed.
  - Be sure to install the copper washer on the collar.



- Push the starter clutch gear [A] in and turn it clockwise [B] and install it.
  - Apply oil to the threads of the starter clutch bolt and tighten it to the specified torque while holding the primary gear bolt.

  Torque - Starter Clutch Bolt: 85 N·m (8.7 kg·m, 63 ft·lb)
- Be sure to install the washer [C] onto the torque limiter.

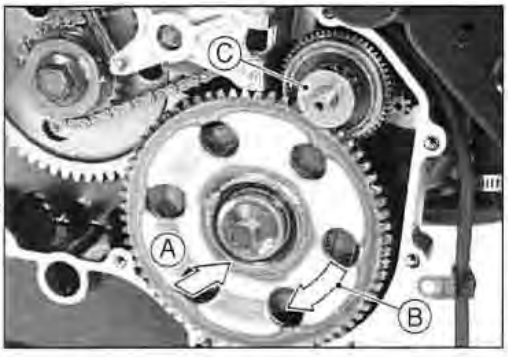

Disassembly

- Remove the starter clutch assy.
- Remove the Allen bolts [A] with the balancer [B] held in a vise.

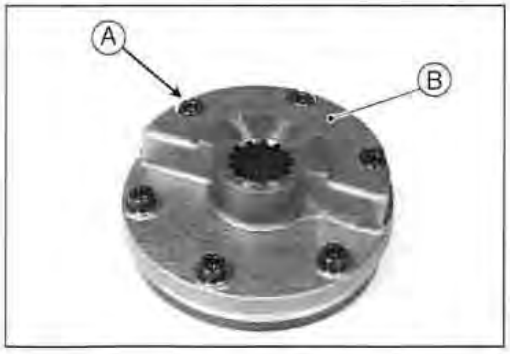

Starter Clutch

- Pull the coupling [A] out of the right balancer [B].
- Take the one-way clutch [C] out of the coupling.
  Starter Clutch Gear [D]

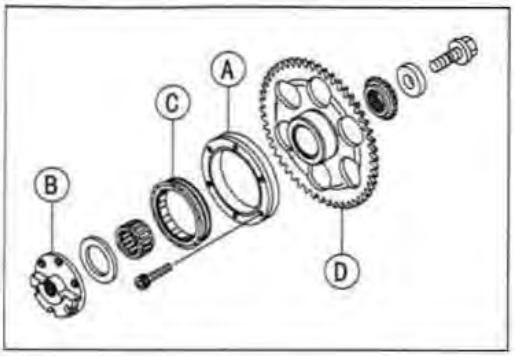

Assembly

- Install the one way clutch [A] so that its groove [B] faces outward and its flange [C] fits between the right balancer [D] and the coupling [E].
- Apply a non-permanent locking agent to the threads of the coupling bolts, and tighten them to the specified torque.

Torque - Starter Clutch Coupling Bolt: 15 N·m (1.5 kg·m, 11.0 ft·lb)

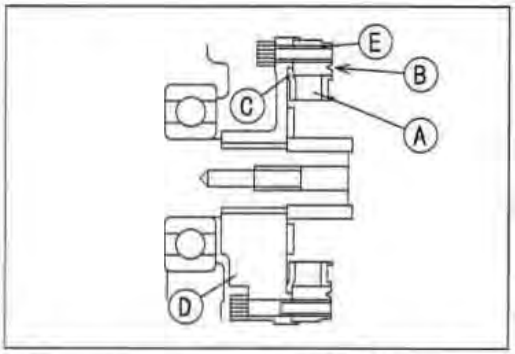

Inspection

- Remove the starter clutch gear [A] and torque limiter, then reinstall the starter clutch gear into the starter clutch.
- Turn the starter clutch to both side.
  When viewed from the right side of the engine, the clutch should turn clockwise [B] freely, but should not turn counterclockwise [C].



★ If the starter clutch does not operate as it should or if it makes noise, disassemble the starter clutch.
★ If one-way clutch [A] installation is wrong, reinstall it.
★ Visually inspect the one-way clutch, coupling and starter clutch gear for damage.
★ If there is any worn or damaged parts, replace it.
  Sliding Surface [B] and Cage of One-way Clutch
  Sliding Surface [C] of Starter Clutch Gear

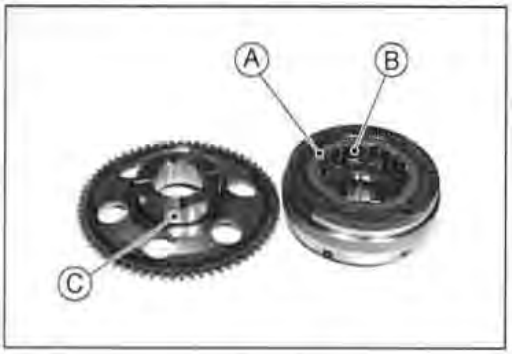

Sliding Surface [A] of Coupling

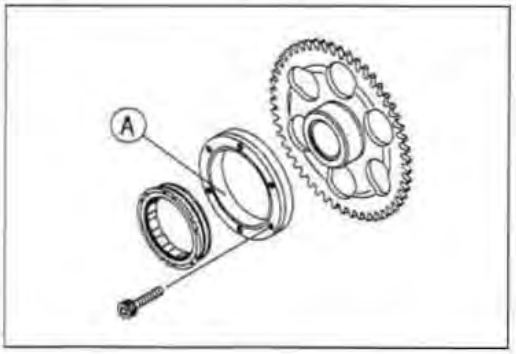

Starter Torque Limiter

Removal

- Remove the clutch cover (see Clutch chapter).
- Remove the starter clutch gear [A].
- Pull the torque limiter [B] out of the right crankcase.

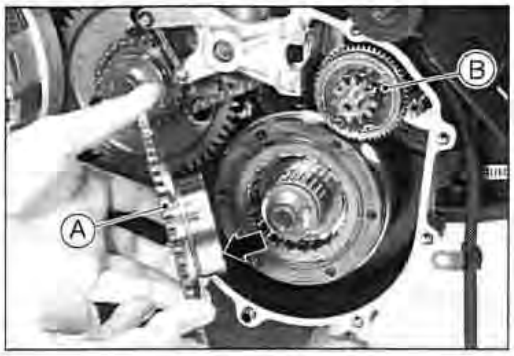

CAUTION

Do not disassemble the torque limiter. The torque limiter will be damaged.

Inspection

- Remove the torque limiter and visually inspect it.

★ If the limiter has wear, discoloration, or other damage, replace it as a set.

Gear [A]
Friction Plates [B]
Spring [C]
Pinion [D]

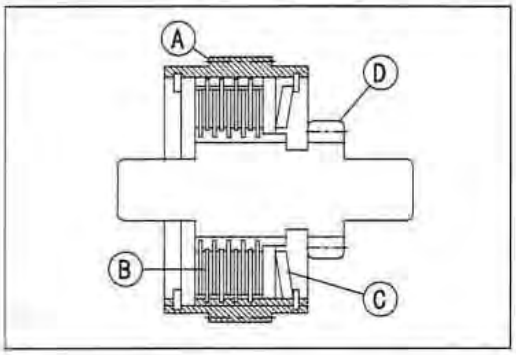

Water Pump Idle Shaft Holder

Removal

- Remove the clutch cover (see Clutch chapter).
- Remove:
  Starter Clutch Gear
  Starter Torque Limiter
- Take the end of the spring [A] off the hook.
- Unscrew the bolts [B] and take the idle shaft holder [C] with the chain guide [D] out of the crankcase.
- Pull out the chain guide from the holder.

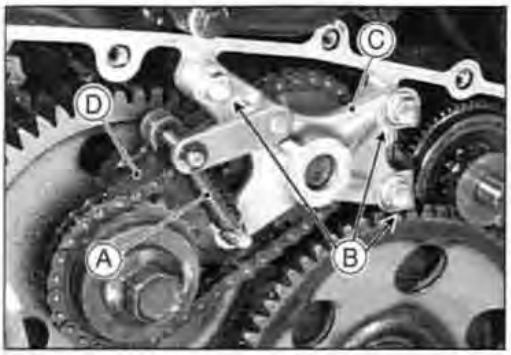

Installation

- Put the washer [B] onto the idle shaft [A], and fit the dowel pins [C] into the crankcase.
- Install the idle shaft holder and lock washer.

Torque - Idle Shaft Holder Bolts: 7.8 N·m (0.80 kg·m, 69 in·lb)

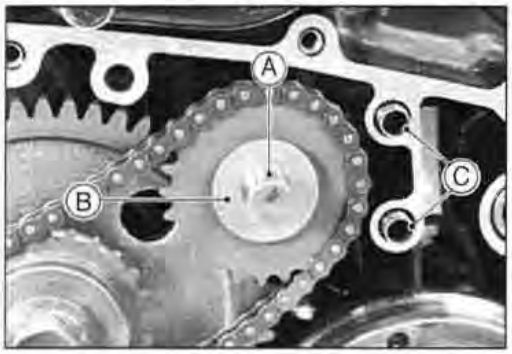

Primary Gear

Removal

- Remove:
  Clutch Cover (see Clutch chapter)
  Starter Clutch Gear (see this chapter)
  Starter Torque Limiter
  Clutch (see Clutch chapter)
- Remove the water pump chain guide [A] and water pump idle shaft holder [B] from the right crankcase.



- Using an air impact wrench, or holding the alternator rotor (Remove the alternator cover), remove the primary gear bolt [A], water pump drive sprocket [B], idle shaft [C], and idle shaft sprocket [D], Water Pump Chain [E]

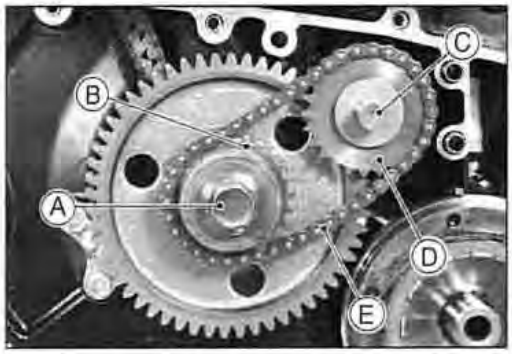

- Pull the primary gear out of the crankshaft, and take the pins [A] out of the idle shaft [B].

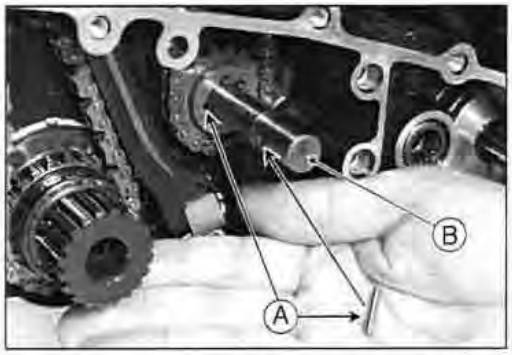

Installation

- Fit the primary gear [A] with the boss [B] facing toward the engine inside.
- Install two pins into the water pump idle shaft.
- Fit the pins into the slots of the water pump drive sprocket boss and install the sprocket.
- Install the clutch (see Clutch chapter).



- Apply engine oil to the threads and seating surface, and tighten the primary gear bolt [A] to the specified torque, while holding the primary gear [B] with the gear holder [C].

Special Tool - Gear Holder: 57001-1015

Torque - Primary Gear Bolt: 145 N·m (15.0 kg·m, 110 ft·lb)

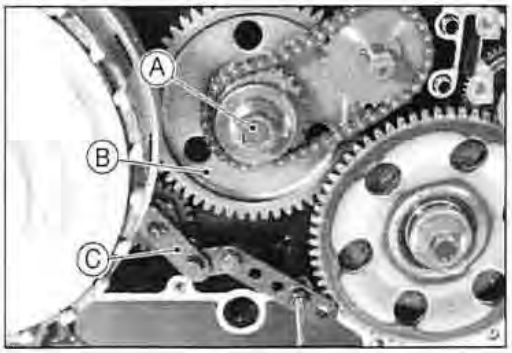

Transmission

Rear Shift Pedal Removal

- Remove the front guard.
- Unscrew the bolt [A] and take off the left front footpeg [B].

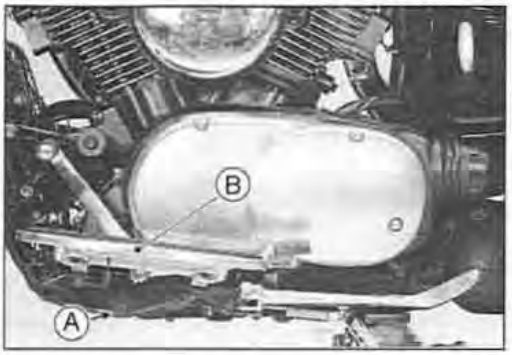

- Unscrew the clamp bolt [A] and pull out the rear shift pedal [B].

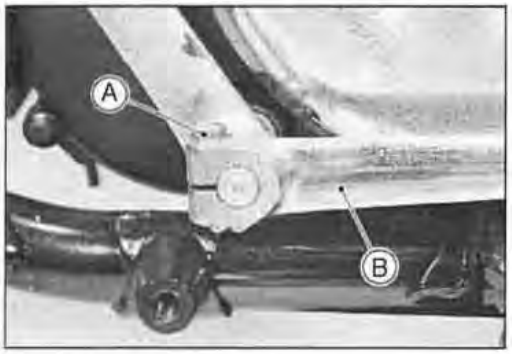

Rear Shift Pedal Installation

- Install the rear shift pedal [A] so that the punched mark on the shaft is aligned [B] with the punched mark on the pedal.
- Tighten the clamp bolt.

Torque - Rear Shift Pedal Clamp Bolt: 12 N·m (1.2 kg·m, 104 in·lb)

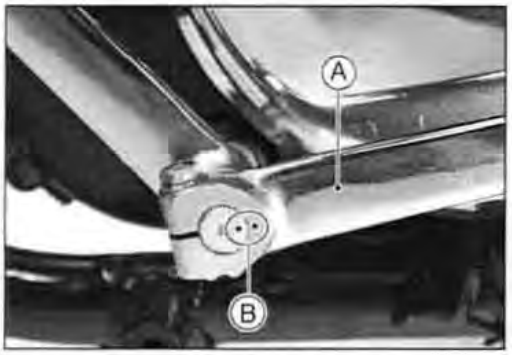

Front Shift Pedal Removal

- Remove the rear shift pedal (see this chapter).
- Unscrew the clamp bolt [A] and pull out the front shift pedal [B].

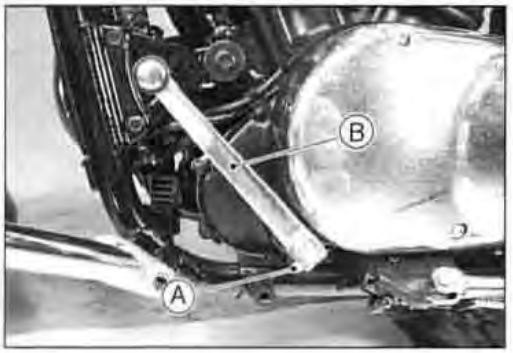

Transmission

Front Shift Pedal Installation

- Install the front shift pedal [A] so that the punched mark on the shaft is aligned [B] with the punched mark on the pedal.
- Tighten the clamp bolt of the front shift pedal.

Torque - Front Shift Pedal Clamp Bolt: 12 N·m (1.2 kg·m, 104 in·lb)

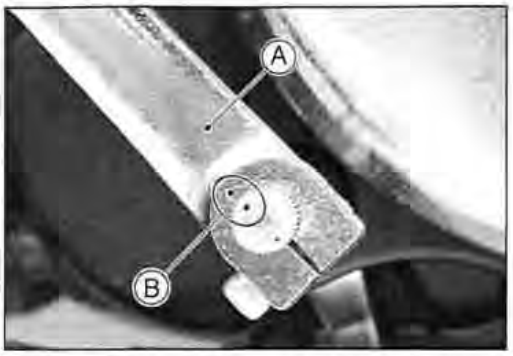

External Shift Mechanism Removal

- Remove:
  Front and Rear Shift Pedals (see this chapter)
  Alternator Outer Cover (see Electrical System chapter)
  Engine (see Engine Removal/Installation chapter)
  Front and Rear Shift Levers [A]
  Front Gear Case [B] (see Final Drive chapter)

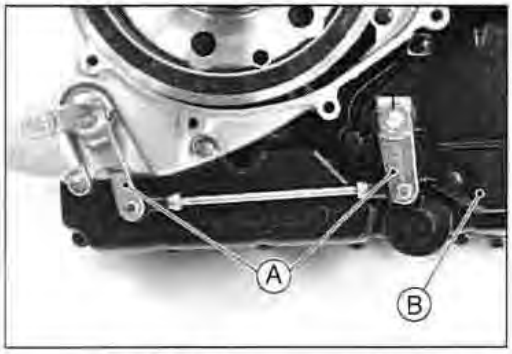

- Remove the shift shaft [A] while pushing [B] the shift mechanism arm [C] towards the shift shaft.
- Unscrew the bolt and remove the gear set lever [D] and its spring.

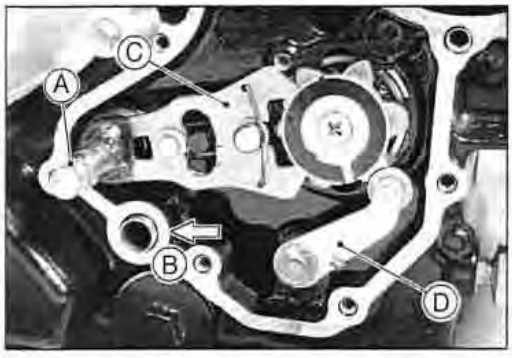

External Shift Mechanism Installation

- Install the gear set lever [A] and the spring [B] in the crankcase and tighten the bolt [C].
- Install the shift mechanism arm assy. Be sure to install the washer onto the shift shaft.
- Install the front gear case (see Final Drive chapter).

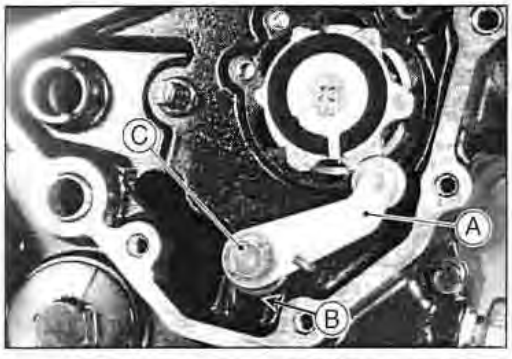

- Install the front shift lever and the rear shift lever.
  Install the rear shift lever [A] on the shift shaft so that the punched mark on the shaft is aligned [B] with the slot of the rear shift lever.
- Loosen the locknuts [C] and turn the shift rod [D] so that the outside length [E] of the locknuts is **112 ± 1 mm**.
  Front [F]
  The rear locknut has left-hand threads.

Torque - Shift Rod Locknuts: 9.8 N·m (1.0 kg·m, 87 in·lb)

- Install the clutch hose guide and grommet.

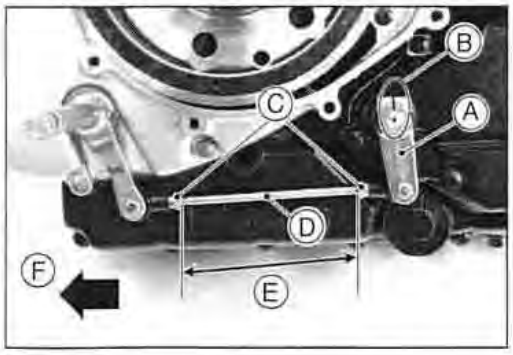

Transmission

External Shift Mechanism Inspection

- Examine the shift shaft [A] for any damage.
- ★ If the shaft is bent, straighten or replace it.
- ★ If the splines [B] are damaged, replace the shaft.
- ★ If the springs [C] [D] are damaged in any way, replace them.
- ★ If the shift mechanism arm [E] is damaged in any way, replace the arm.

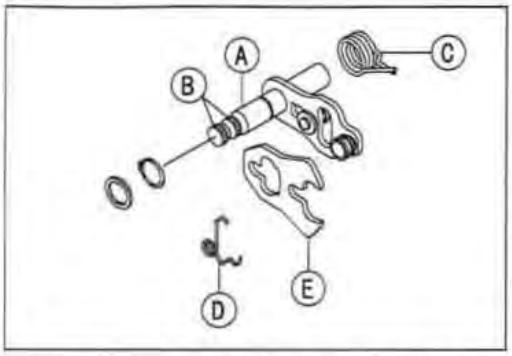

- Check the return spring pin [A] is not loose.
- ★ If it is loose, unscrew it, apply a non-permanent locking agent to the threads, and tighten it.

Torque - Shift Shaft Return Spring Pin: 20 N·m (2.0 kg·m, 14.5 ft·lb)

- Check the gear set lever [B], and its spring [C] for breaks or distortion.
- ★ If the lever or spring is damaged in any way, replace it.
- Visually inspect the shift drum pins, pin holder, and pin plate.
- ★ If they are badly worn or if they show any damage, replace them.



Transmission Removal

- Remove the engine (see Engine Removal/Installation chapter).
- Split the crankcase (see this chapter).
- Remove the crankshaft.
- First, remove the oil pipe [A] (see Engine Lubrication System chapter), and then remove the shift drum bearing holder bolts and holder [B].
- Pull out the shift rod [C] and take the shift fork [D] out of the output shaft 4th gear.

  Output Shaft [E]
  Drive Shaft [F]
  Shift Drum [G]

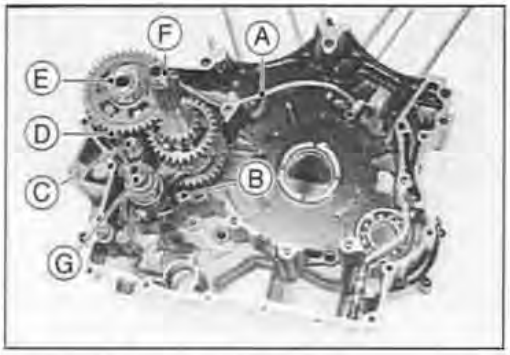

- Align the shift drum cam [A] with the cutoff [B] of the left crankcase by turning the shift drum.
- Take out the transmission shafts and shift drum as a set.
- Separate the drive and output shafts, shift drum, and shift forks.

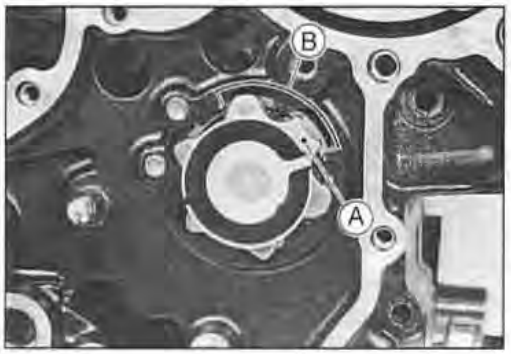

Transmission Installation

- Install the drive and output shaft assy, shift drum, and output shaft 5th gear shift fork as a set.

  Drive Shaft Assy [A]
  Output Shaft Assy [B]
  Shift Fork (Drive, 3rd Gear) and Shift Drum Assy [C]
  Shift Fork (Output, 5th Gear) [D]

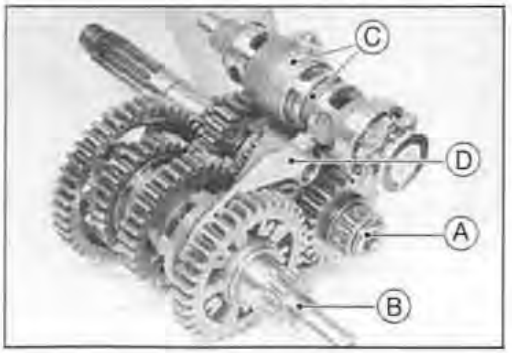

Transmission

○ The output shaft shift forks have an identification number. Do not confuse them.

● Install them as shown.
Shift Fork (No-270), 5th Gear [A]
Shift Fork (No-269), 4th Gear [B]
Toward the left crankcase [C].

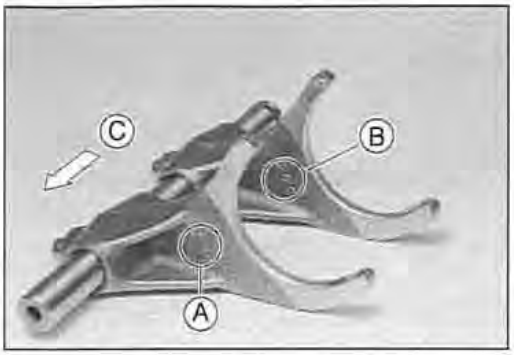

● Apply a non-permanent locking agent to the shift drum bearing holder bolts.

Torque - Shift Drum Bearing Holder Bolts: 9.8 N·m (1.0 kg·m, 87 in·lb)

● Install:
Shift Drum Bearing Holder [A]
Bolts [B]

● Apply engine oil to the shift rod, the shift forks, and gears.

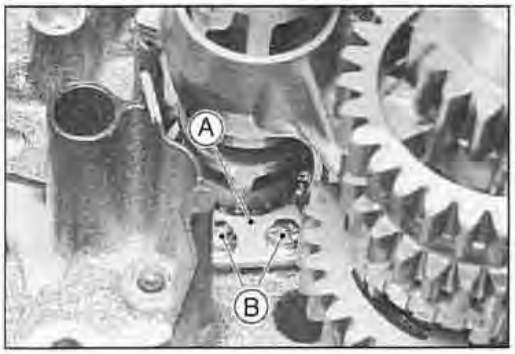

● Install:
Shift Fork (Output, 4th Gear) [A]
Shift Rod [B]

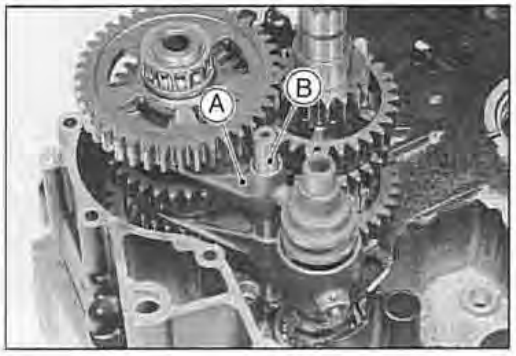

Shift Drum Disassembly/Assembly

● Remove the shift drum assy [A] (see this chapter).
Drive Shaft Shift Fork (No-268) [B]
Cotter Pin [C]

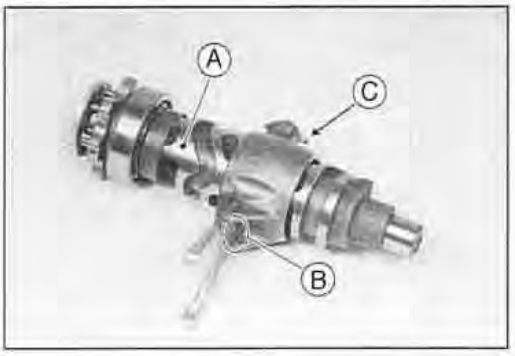

● Disassemble the shift drum assy as shown.
Pin Plate [A]
Pin [B]
Cam [C]
Bearing [D]
Shift Drum [E]
Drive Shaft Shift Fork (No-268) [F]
Cotter Pin [G]

● Apply a non-permanent locking agent to the threads of the shift drum cam screw [H].

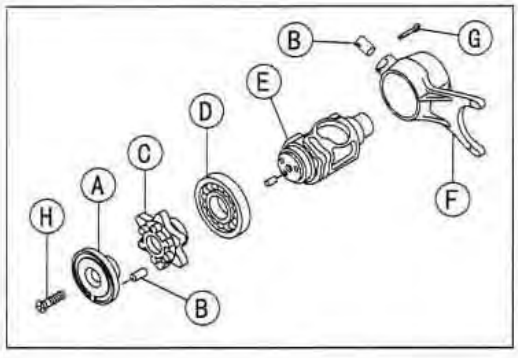

Transmission

Transmission Disassembly

- Remove the transmission shafts (see this chapter).
- Using the circlip pliers (special tool), remove the circlips, and disassemble the transmission shaft.

Special Tool - Outside Circlip Pliers: 57001-144

- The 4th gear [A] on the output shaft has three steel balls for the positive neutral finder mechanism.
- Remove the 4th gear as follows.
  - Set the output shaft in a vertical position holding the 3rd gear [B].
  - Spin the 4th gear quickly [C] and pull it off upward.

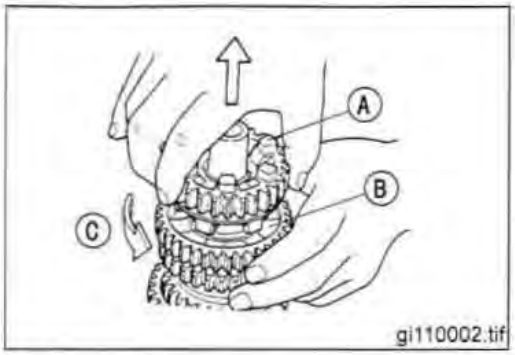

Transmission Assembly

- Align each gear oil hole [A] with the drive shaft oil hole, when installing the 3rd gear [9] and the 5th gear [6] (see Drive Shaft Illustration).
- Align each oil hole [A] with the output shaft oil hole, when installing the 5th gear [B] [5], 3rd gear and bushing [C] [7], and the 4th gear [9] (see Output Shaft Illustration).

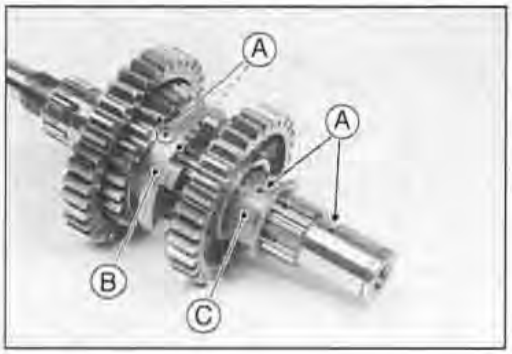

- Fit the three steel balls [A] into the holes [B] of the output 4th gear [C], and then install the gear on the output shaft so that the steel balls align with the recesses [D] in the shaft.

CAUTION

Do not apply grease to the steel balls to hold them in place. This will cause the positive neutral finder mechanism to malfunction.

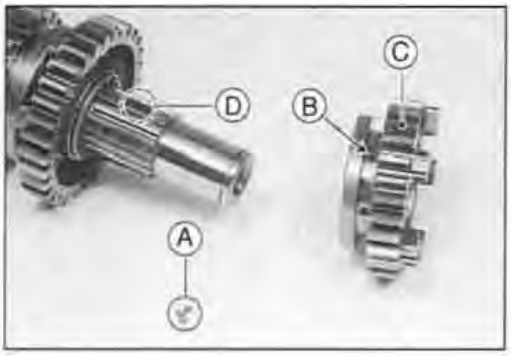

- After assembling the 4th gear with steel balls in place on the output shaft, check the ball-locking effect that the 4th gear does not come out of the output shaft when moving it up and down by hand.

- Replace any circlip [A] that were removed with new ones.
- Install the circlips so that the opening [B] is aligned with a spline groove [C].

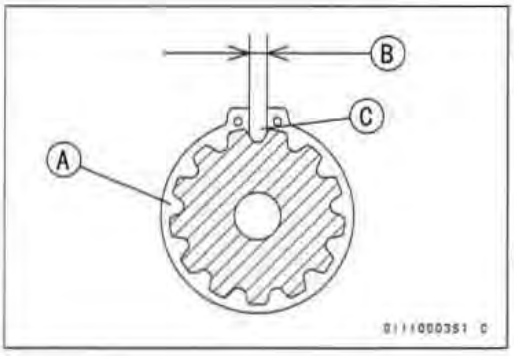

Transmission

Drive Shaft:

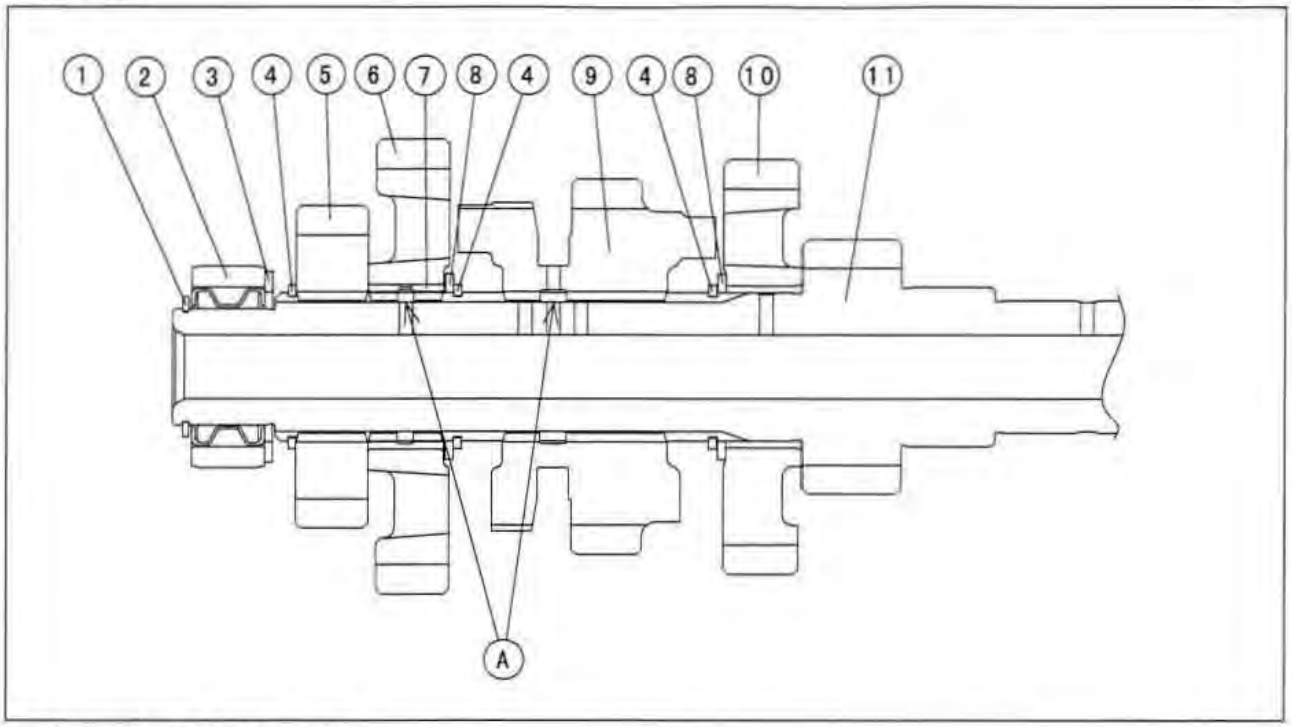

1. Circlip (20 × 25.5 × 1.2)
2. Needle Bearing
3. Thrust Washer (22.3 × 35 × 1.6)
4. Circlip (ϕ 28) (3)
5. 2nd Gear
6. 5th (Top) Gear
7. Bushing (5th Gear)
8. Washer (28.5 × 34 × 1.5) (2)
9. 3rd Gear
10. 4th Gear
11. 1st Gear

Align gear oil holes with the shaft holes [A].

Transmission

Output Shaft:

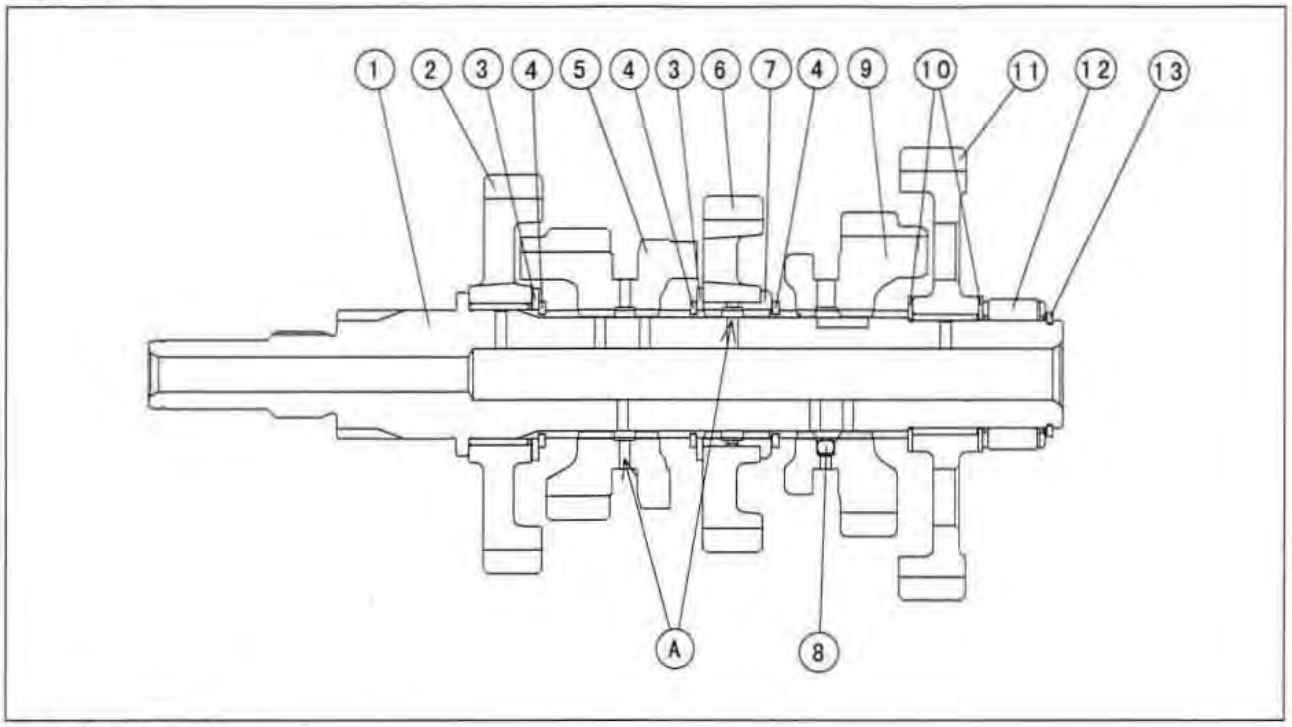

1. Output Shaft
2. 2nd Gear
3. Washer (30.3 × 40 × 1.5) (2)
4. Circlip (⌀ 29) (3)
5. 5th (Top) Gear
6. 3rd Gear
7. Bushing (3rd Gear)
8. Steel Ball
9. 4th Gear
10. Washer (25.5 × 36 × 1.0) (2)
11. 1st Gear
12. Needle Bearing
13. Circlip (× 25)

Align gear oil holes with the shaft holes [A].

Shift Fork Bending

- Visually inspect the shift forks, and replace any fork that is bend. A bent fork could cause difficulty in shifting, or allow the transmission to jump out of gear under power.

90° [A]

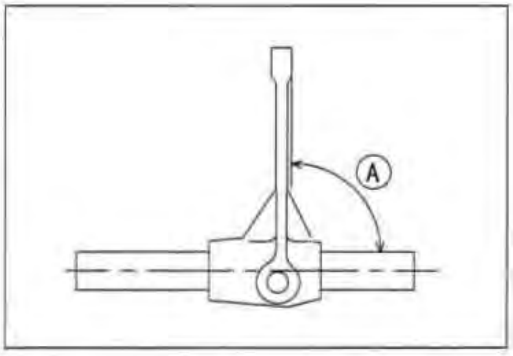

Transmission

Shift Fork/Gear Groove Wear

- Measure the thickness of the shift fork ears [A], and measure the width [B] of the gear grooves.

★ If the thickness of a shift fork ear is less than the service limit, the shift fork must be replaced.

Shift Fork Ear Thickness
Standard: 5.9 ~ 6.0 mm
Service Limit: 5.8 mm

★ If the gear groove is worn over the service limit, the gear must be replaced.

Gear Groove Width
Standard: 6.05 ~ 6.15 mm
Service Limit: 6.3 mm

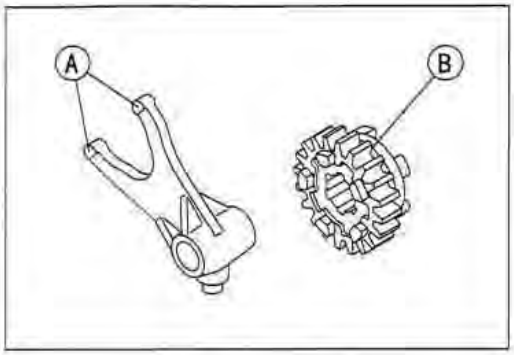

Shift Fork Guide Pin/Drum Groove Wear

- Measure the diameter of each shift fork guide pin [A], and measure the width [B] of each shift drum groove.

★ If the guide pin on any shift fork is less than the service limit, the fork must be replaced.

Shift Fork Guide Pin Diameter
Standard: 7.9 ~ 8.0 mm
Service Limit: 7.8 mm

★ If any shift drum groove is worn over the service limit, the drum must be replaced.

Shift Drum Groove Width
Standard: 8.05 ~ 8.20 mm
Service Limit: 8.3 mm

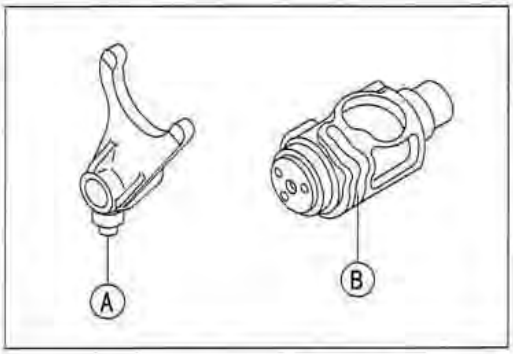

Gear Dog and Gear Dog Hole Damage

- Visually inspect the gear dogs [A] and gear dog holes [B].

★ Replace any damaged gears or gears with excessively worn dogs or dog holes.

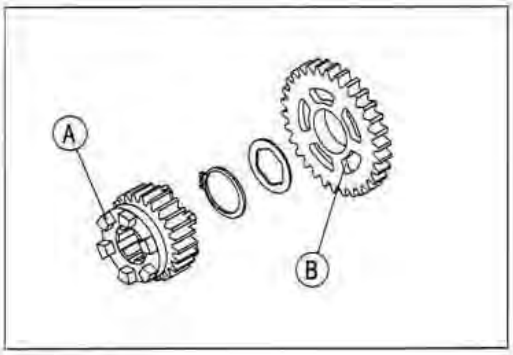

Ball Bearing, Needle Bearing, and Oil Seal

Ball Bearing and Outer Race Replacement

CAUTION

Do not remove the ball bearing or needle bearing outer race unless it is necessary. Removal may damage them.

● Using a press or puller, remove the ball bearing and/or needle bearing outer race.

NOTE

○ *In the absence of the above mentioned tools, satisfactory results may be obtained by heating the case to approximately 93°C (200°F) max., and tapping the bearing in or out.*

CAUTION

Do not heat the case with a blowtorch. This will warp the case. Soak the case in oil and heat the oil.

● Using a press and the bearing driver set [A], install the new bearing or outer race until it stops at the bottom of its housing.

Special Tool - Bearing Driver Set: 57001-1129

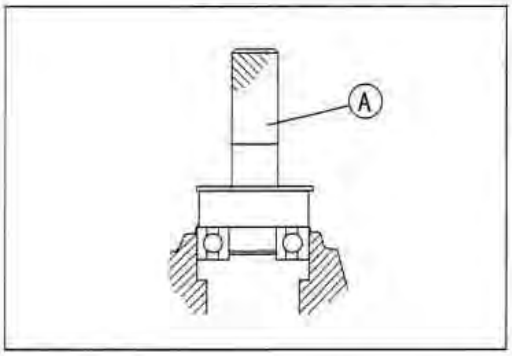

Ball and Needle Bearing Wear

CAUTION

Do not remove the ball bearings for inspection. Removal may damage them.

● Check the ball bearings.

○ Since the ball bearings are made to extremely close tolerances, the wear must be judged by feel rather than measurement. Clean each bearing in a high-flash point solvent, dry it (do not spin the bearing while it is dry), and oil it with engine oil.

○ Spin [A] the bearing by hand to check its condition.

★ If the bearing is noisy, does not spin smoothly, or has any rough spots, replace it.

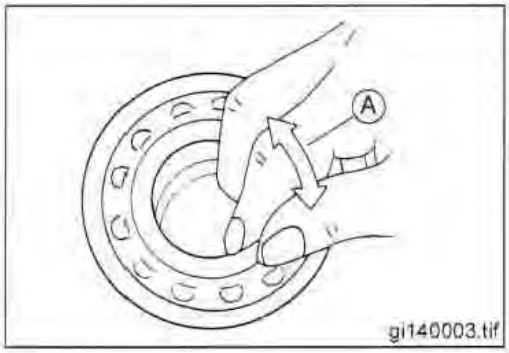

● Check the needle bearings.

○ The rollers in a needle bearing normally wear very little, and wear is difficult to measure. Instead of measuring, inspect the bearing for abrasion, color change, or other damage.

★ If there is any doubt as to the condition of a needle bearing, replace it.

Oil Seal Inspection

● Inspect the oil seal.

★ Replace it if the lips are misshapen, discolored (indicating that the rubber has deteriorated), hardened or otherwise damaged.

Wheels/Tires

Table of Contents

Exploded View 9-2
Specifications 9-3
Wheels (Rims) 9-4
  Front Wheel Removal 9-4
  Front Wheel Installation 9-4
  Rear Wheel Removal 9-5
  Rear Wheel Installation 9-6
  Wheel Coupling Removal 9-7
  Wheel Coupling Installation 9-7
  Wheel Inspection 9-7
  Axle Inspection 9-8
  Wheel Balance 9-8
  Balance Inspection 9-8
  Balance Adjustment 9-8
  Balance Weight Removal 9-8
  Balance Weight Installation 9-9
  Air Pressure Inspection/Adjustment 9-10
  Tire Inspection 9-10
  Tire Removal 9-11
  Tire Installation 9-11
  Tire Repair 9-13
Hub Bearings (Wheel Bearings) 9-14
  Removal 9-14
  Installation 9-14
  Inspection 9-15
  Lubrication 9-15
Speedometer Gear Housing 9-16
  Disassembly 9-16
  Lubrication 9-16

Exploded View

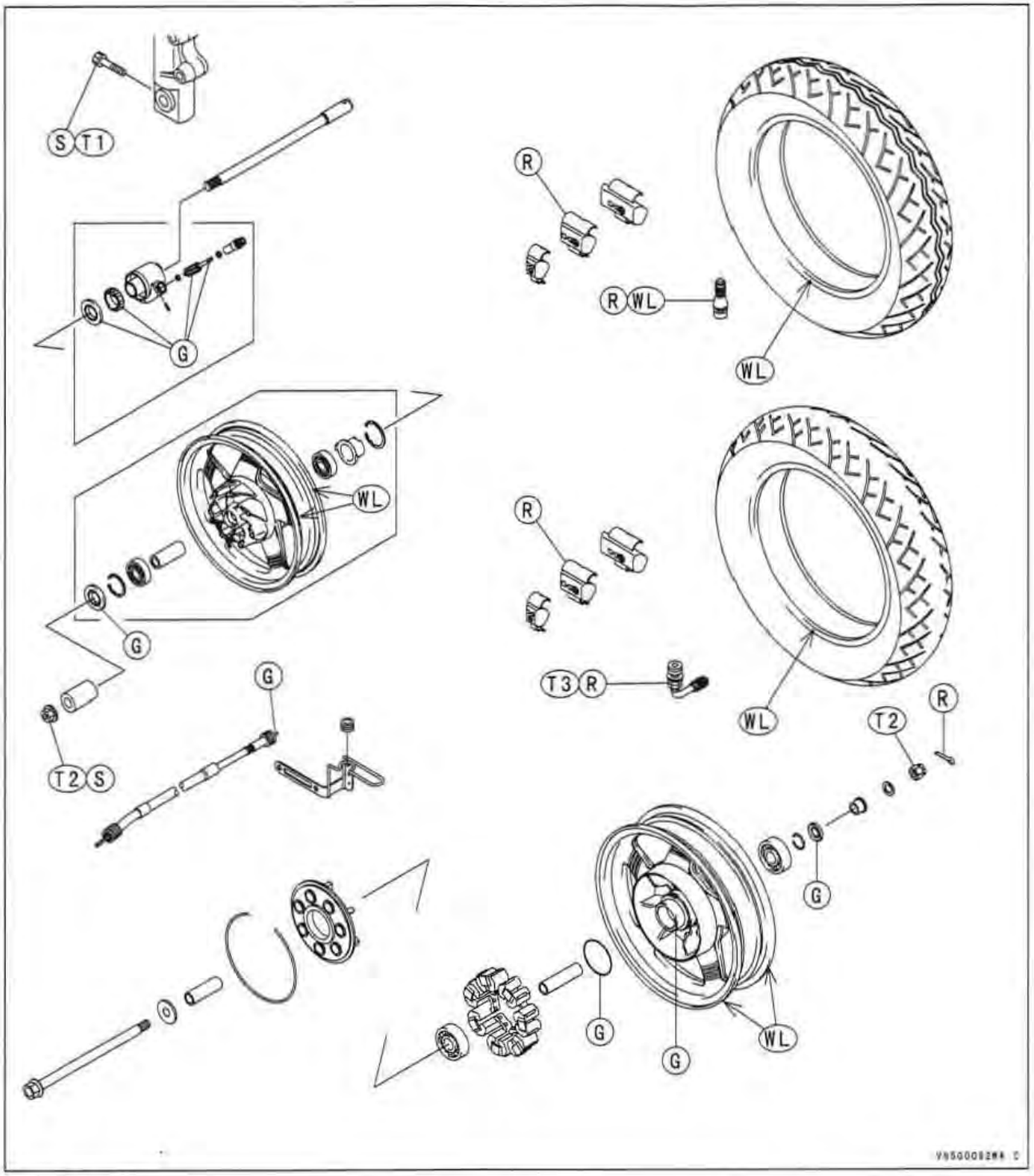

G: Apply grease.
R: Replacement Parts
S: Follow the specific tightening sequence.
WL: Apply soap and water solution or rubber lubricant.
T1: 34 N·m (3.5 kg·m, 25 ft·lb)
T2: 110 N·m (11.0 kg·m, 80 ft·lb)
T3: 1.5 N·m (0.15 kg·m, 13 in·lb)

Specifications

Item		Standard	Service Limit
Wheels (Rims):			
Rim runout:	Axial	– – –	TIR 0.5 mm
	Radial	– – –	TIR 0.8 mm
Axle runout/100 mm		TIR 0.05 mm or less	TIR 0.2 mm
Wheel balance		10 g or less	– – –
Balance weights		10 g, 20 g, 30 g	
Tires:			
Air pressure (when cold):			
	Front	Up to 185 kg (408 lb) load:	
		225 kPa (2.25 kg/cm^2, 32 psi)	– – –
	Rear	Up to 185 kg (408 lb) load:	
		280 kPa (2.8 kg/cm^2, 40 psi)	– – –
Tread depth:			
	Front	BRIDGESTONE: 6.2 mm	
		DUNLOP: 4.5 mm	1 mm
			(FG) 1.6 mm
	Rear	BRIDGESTONE: 7.2 mm	Up to 130 km/h
		DUNLOP: 7.3 mm	(80 mph): 2 mm
			Over 130 km/h
			(80 mph): 3 mm
Standard tires:		Make, Type	Size
	Front	BRIDGESTONE EXEDRA G703E, Tubeless	150/80-16 71H
		DUNLOP D404FG, Tubeless	
	Rear	BRIDGESTONE EXEDRA G702, Tubeless	150/80-16 71H
		DUNLOP D404, Tubeless	150/80B16 71H (G2A Model –)
	Front	PIRELLI MT66 Front, Tubeless	150/80-16M/C 71H
		METZELER Marathon Front, Tubeless	150/80-16M/C 71H
	Rear	PIRELLI MT66, Tubeless	150/80-16M/C 71H
		METZELER ME88, Tubeless	150/80-16M/C 71H

FG: Germany Model

Special Tools - Jack: 57001-1238
Attachment Jack: 57001-1398
Inside Circlip Pliers: 57001-143
Bearing Driver Set: 57001-1129
Bearing Remover Shaft, ϕ13: 57001-1377
Bearing Remover Head, ϕ20 × ϕ22: 57001-1293

⚠WARNING

Use the same manufacture's tires on both front and rear wheels.

Wheels (Rims)

Front Wheel Removal

- Remove the speedometer cable lower end [A].
- Remove both brake calipers [B] with the hoses installed.

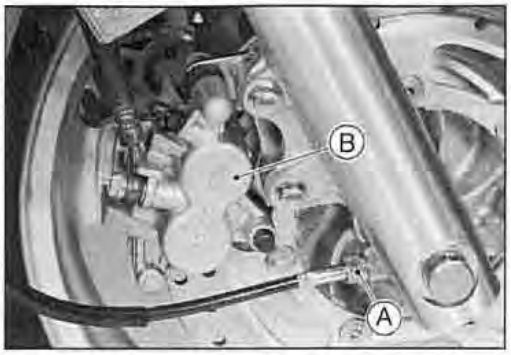

- Remove:
  Front Axle Nut [A]
- Loosen:
  Right Side Axle Clamp Bolt [B]

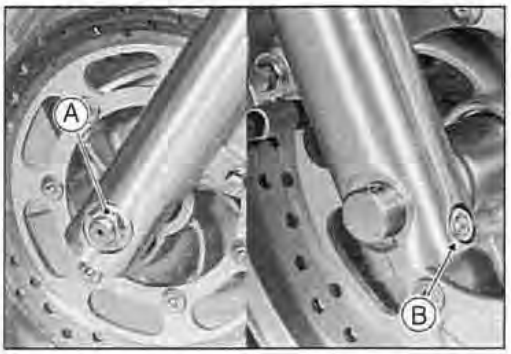

Use the jack [A], the attachment jack [B], and a commercially available jack [C] to lift the front wheel off the ground.

Special Tools - Jack: 57001-1238
Attachment Jack: 57001-1398

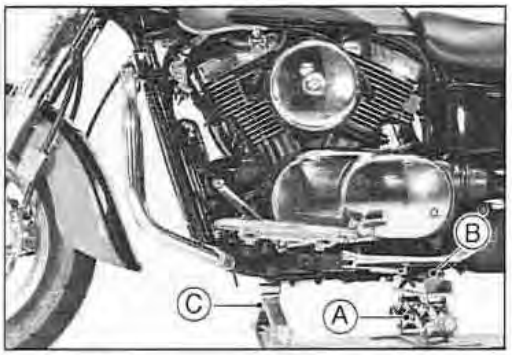

- Pull out the axle to the right and drop the front wheel [A] out of the fork.

CAUTION

Do not lay the wheel down on one of the discs. This can damage or warp the disc. Place blocks under the wheel so that the disc does not touch the ground.



Front Wheel Installation

- Install the speedometer gear housing [A] so that the projections [B] fit in the drive notches [C].

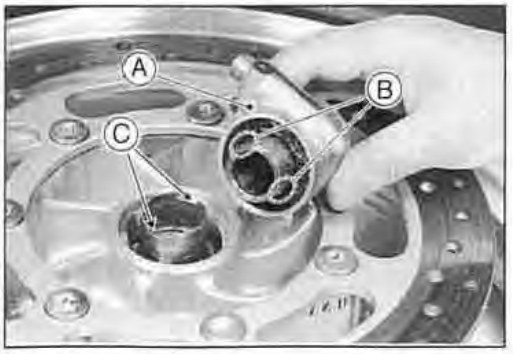

Wheels (Rims)

- Fit the collar [A] on the left side of the hub.



- Fit the speedometer gear housing stop [A] between the fork leg stops [B].
- Tighten the axle and right axle clamp bolt.

Torque - Front Axle Nut: 110 N·m (11.0 kg·m, 80 ft·lb)
Front Axle Clamp Bolt: 34 N·m (3.5 kg·m, 25 ft·lb)
Front Caliper Mounting Bolts: 34 N·m (3.5 kg·m, 25 ft·lb)

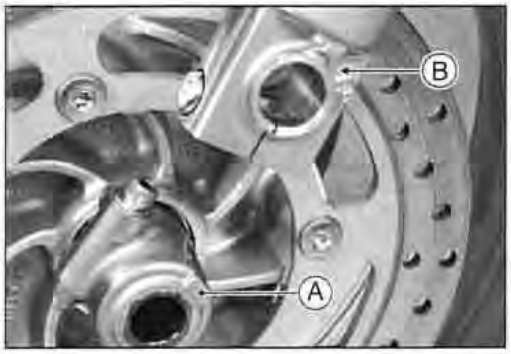

- Check the front brake effectiveness.

⚠ WARNING

Do not attempt to ride the motorcycle until a full brake lever is obtained by pumping the brake lever until the pads are against the disc. The brakes will not function on the first application of the lever if this is not done.

Rear Wheel Removal

- Use the jack and the attachment jack or other means to lift the rear wheel.

Special Tools - Jack: 57001-1238 [A]
Attachment Jack: 57001-1398 [B]

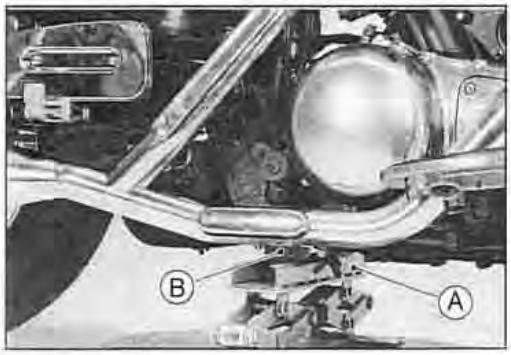

- Remove the rear fender [A] (see Frame chapter).
- Take off the silencers [B] and chamber [C] as a set by removing bolts [D].

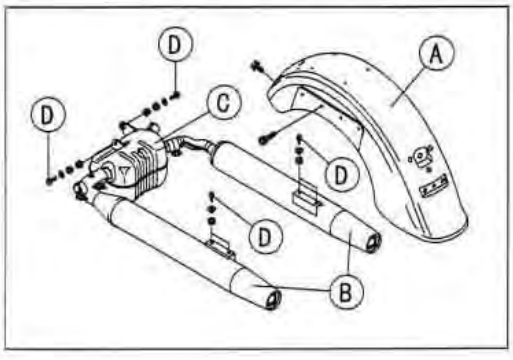

Wheels (Rims)

- Remove:
  Caliper Mounting Bolts [A]
  Caliper [B]
  Caliper Holder Bolt [C]
  Axle Nut Cotter Pin [D]
  Axle Nut [E]

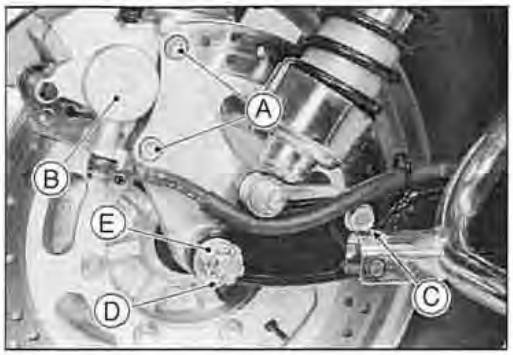

- Pull out the axle, and slide the rear wheel toward the right to disengage the wheel from the final gear case.
- Move the rear wheel [A] back [B] and remove it.

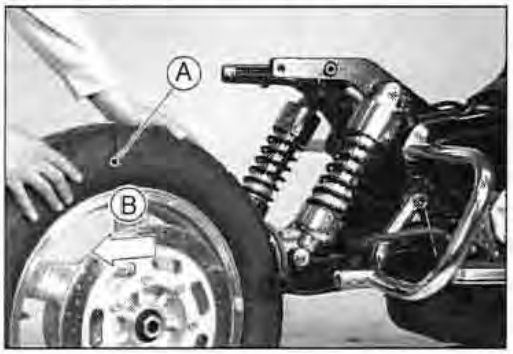

Rear Wheel Installation

- Apply grease to the grease seal of the wheel.
- Apply grease to the ring gear hub splines [A] of the final gear case [B].
- Insert the collars [C] on both sides of the hub.
- Hold the rear wheel, and engage the ring gear hub splines with the wheel coupling hub splines.
- Tighten:

Torque - Rear Axle Nut: 110 N·m (11.0 kg·m, 80 ft·lb)
Rear Caliper Holder Bolt: 64 N·m (6.5 kg·m, 47 ft·lb)
Rear Caliper Mounting Bolts: 32 N·m (3.3 kg·m, 24 ft·lb)

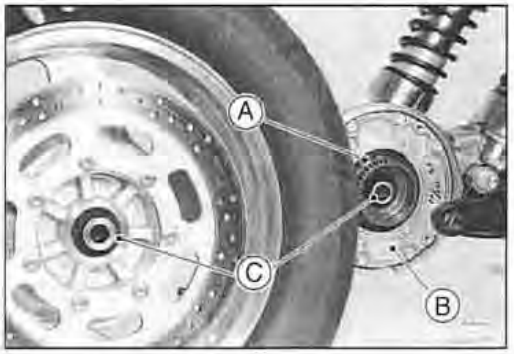

⚠ WARNING

If the axle nut is not securely tightened, an unsafe riding condition may result.

- Insert a new cotter pin [A] and bend it over the nut as shown.
- Check the rear brake effectiveness.

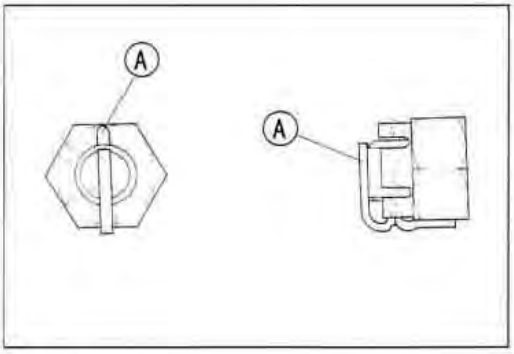

⚠ WARNING

Do not attempt to ride the motorcycle until a full brake pedal is obtained by pumping the brake pedal until the pads are against the disc. The brake will not function on the first application of the pedal if this is not done.

Wheels (Rims)

Wheel Coupling Removal

- Remove the rear wheel (see Rear Wheel Removal).
- Remove the coupling snap ring [A].
- Remove the wheel coupling [B] with a bearing puller if necessary.

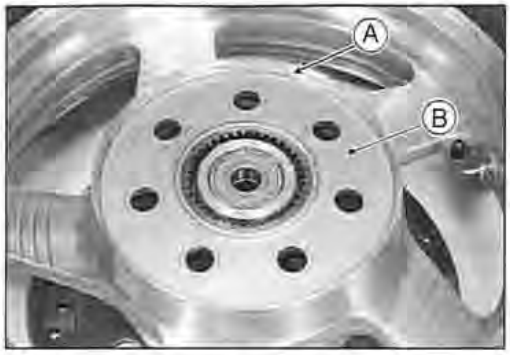

Wheel Coupling Installation

- Apply grease to the O-ring [A].

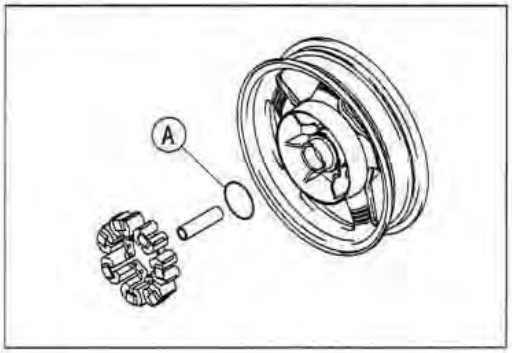

Wheel Inspection

- Raise the front/rear wheel off the ground, using the jack, the attachment jack, and a suitable jack.

Special Tools - Jack: 57001-1238
Attachment Jack: 57001-1398

- Spin the wheel lightly, and check for roughness or binding.
★ If roughness or binding is found, replace the hub bearings.
- Inspect the wheel for small cracks, dents, bending, or warp.
★ If there is any damage to the wheel, replace the wheel.
- Remove the wheel, and support it without the tire by the axle.
- Measure the axial [A] and radial [B] rim runout with a dial gage.
★ If rim runout exceeds the service limit, check the hub bearings.
★ If the problem is not due to the bearings, replace the wheel.

Rim Runout
Service Limit: Axial: TIR 0.5 mm
Radial: TIR 0.8 mm

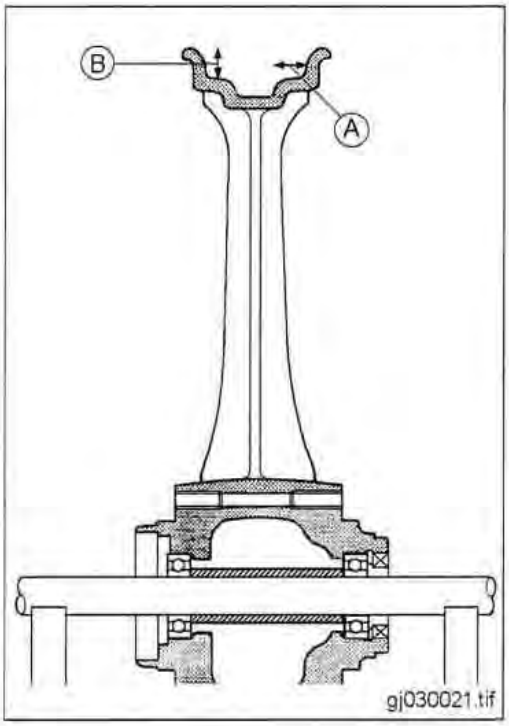

⚠ WARNING

Never attempt to repair a damaged wheel. If there is any damage besides wheel bearings, the wheel must be replaced to insure safe operational condition.

Wheels (Rims)

Axle Inspection

- Visually inspect the front or rear axle for damages.
★ If the axle is damaged or bent, replace it.
- Place the axle in V blocks that are100 mm [A] apart, and set a dial gage [B] on the axle at a point halfway between the blocks. Turn [C] the axle to measure the runout. The difference between the highest and lowest dial readings is the amount of runout.
★ If axle runout exceeds the service limit, replace the axle.

Axle Runout/100 mm
Standard: TIR 0.05 mm or less
Service Limit: TIR 0.2 mm

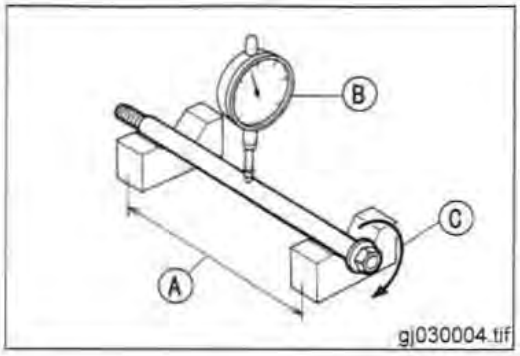

Wheel Balance

- To improve stability and decrease vibration at high speed, the front and rear wheels must be kept balanced.
- Check and balance the wheels when required, or when a tire is replaced with a new one.

Balance Inspection

- Remove the wheel.
- Support the wheel so that it can be spun freely.
- Spin the wheel lightly, and mark [A] the wheel at the top when the wheel stops.
- Repeat this procedure several times. If the wheel stops of its own accord in various positions, it is well balanced.
★ If the wheel always stops in one position, adjust the wheel balance.

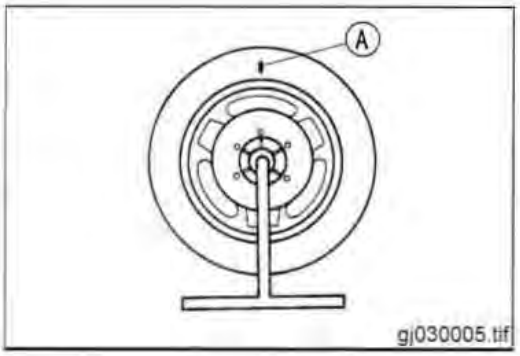

Balance Adjustment

- If the wheel always stops in one position, provisionally attach a balance weight [A] on the rim at the marking using adhesive tape.
- Rotate the wheel 1/4 turn [B], and see whether or not the wheel stops in this position. If it does, the correct balance weight is being used.
★ If the wheel rotates and the weight goes up, replace the weight with the next heavier size. If the wheel rotates and the weight goes down, replace the weight with the next lighter size. Repeat these steps until the wheel remains at rest after being rotated 1/4 turn.
- Rotate the wheel another 1/4 turn and then another 1/4 turn to see if the wheel is correctly balanced.
- Repeat the entire procedure as many times as necessary to achieve correct wheel balance.
- Permanently install the balance weight.

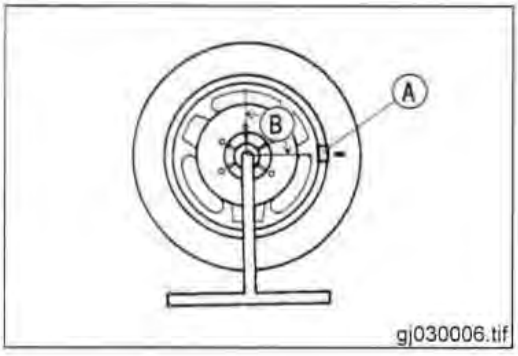

Balance Weight Removal

★ When the tire is not on the rim:
- Push [A] the blade portion toward the outside with a regular tip screwdriver, and slip the weight off the rim flange.
- Discard the used balance weight.



Wheels (Rims)

★When the tire is on the rim:
- Pry [A] the balance weight off the rim flange using a regular tip screwdriver as shown in the figure.
- Insert a tip of the screwdriver between the tire bead [B] and weight blade [C] until the end of the tip reaches the end of the weight blade.
- Push the driver grip toward the tire so that the balance weight slips off the rim flange.
- Discard the used balance weight.

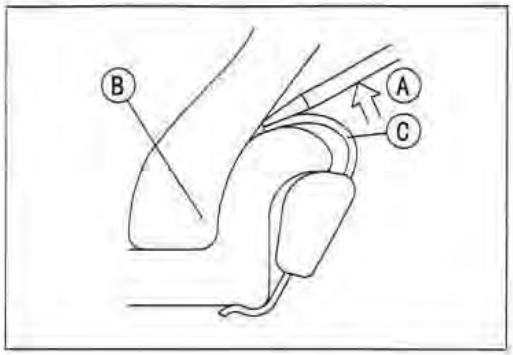

Balance Weight Installation
- Check if the weight portion has any play on the clip plate.

★If it does, discard it.

⚠WARNING

If the balance weight has any play on the rim, the clip of the weight has been stretched. Replace the loose balance weight. Do not reuse used balance weight.
Unbalanced wheels can create an unsafe riding condition.

- Lubricate the balance weight blade, tire bead, and rim flange with a soap and water solution or rubber lubricant. This helps the balance weight slip onto the rim flange.

CAUTION

Do not lubricate the tire bead with engine oil or gasoline because they will deteriorate the tire.

Balance Weight

Part Number	Weight (grams)
41075-1014	10
41075-1015	20
41075-1016	30

NOTE

Balance weights are available from Kawasaki dealers in 10, 20, and 30 gram sizes. An imbalance of less than 10 grams will not usually affect running stability.

Do not use four or more balance weight (more than 90 gram). If the wheel requires an excess balance weight, disassemble the wheel to find the cause.

- Install the balance weight on the rim.
- Slip the weight on the rim flange by pushing or lightly hammering the weight in the direction shown in the figure.

Push or hammer [A].
Rim Flange [B]
Tire Bead [C]
Blade [D]

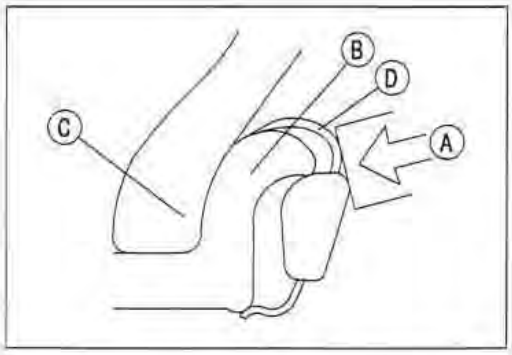

Wheels (Rims)

Check that the blade [A] and weight [B] seat fully on the rim flange [C], and that the clip [D] is hooked over the rim ridge [E] and reaches rim flat portion.

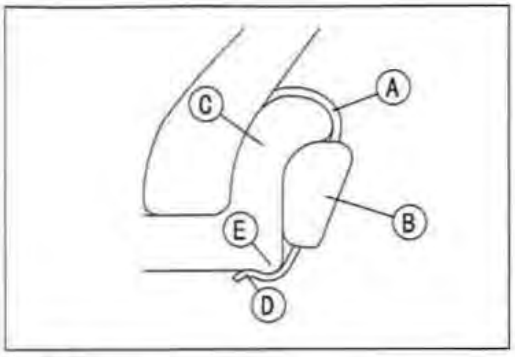

Air Pressure Inspection/Adjustment

- Measure the tire air pressure with an air pressure gauge [A] when the tires are cold (that is, when the motorcycle has not been ridden more than a mile during the past 3 hours).

★ Adjust the tire air pressure according to the specifications if necessary.



Air Pressure (when cold)

Front	Up to 185 kg (408 lb)	225 kPa (2.25 kg/cm^2, 32 psi)
Rear	Up to 185 kg (408 lb)	280 kPa (2.8 kg/cm^2, 40 psi)

Tire Inspection

As the tire tread wears down, the tire becomes more susceptible to puncture and failure. An accepted estimate is that 90% of all tire failures occur during the last 10% of tread life (90% worn). So it is false economy and unsafe to use the tires until they are bald.

- Remove any imbedded stones or other foreign particles from the tread.
- Visually inspect the tire for cracks and cuts, replacing the tire in case of damage. Swelling or high spots indicate internal damage, requiring tire replacement.
- Measure the tread depth at the center of the tread with a depth gage [A]. Since the tire may wear unevenly, take measurement at several places.

★ If any measurement is less than the service limit, replace the tire.

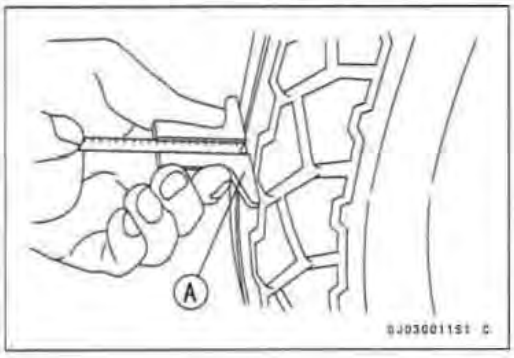

Thread Depth

BRIDGESTONE	Standard	Service Limit
Front	6.2 mm	1 mm (FG) 1.6 mm
Rear	7.2 mm	2 mm (Up to 130 km/h) 3 mm (Over 130 km/h)

DUNLOP	Standard	Service Limit
Front	4.5 mm	1 mm (FG) 1.6 mm
Rear	7.3 mm	2 mm (Up to 130 km/h) 3 mm (Over 130 km/h)

⚠WARNING

To ensure safe handling and stability, use only the recommended standard tires for replacement, inflated to the standard pressure.

NOTE

Most countries may have their own regulations requiring a minimum tire tread depth: be sure to follow them.

Wheels (Rims)

Tire Removal

- Remove the following.
  Wheel (see this chapter)
  Disc(s)
  Valve Core (let out the air)
- To maintain wheel balance, mark the valve stem position on the tire with chalk so that the tire can be reinstalled in the same position.
  Chalk Mark or Yellow Mark [A]
  Air Valve [B]
  Align [C].

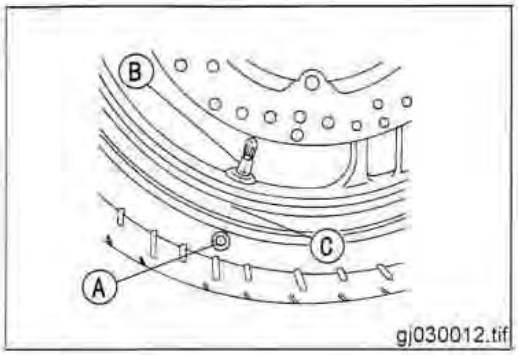

gj030012.tif

- Lubricate the tire beads and rim flanges on both sides with a soap and water solution or rubber lubricant. This helps the tire beads slip off the rim flanges.

CAUTION

Never lubricate with engine oil or petroleum distillates because they will deteriorate the tire.

- Remove the tire from the rim using a commercially available tire changer.

NOTE

The tires cannot be removed with hand tools because they fit the rims too tightly.

Tire Installation

⚠WARNING

Use the same manufacturer's tires on both front and rear wheels.

- Inspect the rim and tire, and replace them if necessary.
- Clean the sealing surfaces of the rim and tire, and smooth the sealing surfaces of the rim with a fine emery cloth if necessary.
- Remove the air valve and discard it.

CAUTION

Replace the air valve whenever the tire is replaced.
Do not reuse the air valve.

- Install a new valve in the front rim.
  Remove the valve cap, lubricate the stem seal [A] with a soap and water solution or rubber lubricant, and pull [B] the valve stem through the rim from the inside out until it snaps into place.

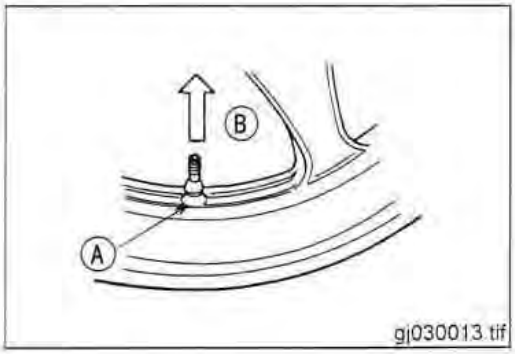

gj030013.tif

CAUTION

Do not use engine oil or petroleum distillates to lubricate the stem because they will deteriorate the rubber.

Wheels (Rims)

□ The front air valve is shown in the figure.
Valve Cap [A]
Valve Core [B]
Stem Seal [C]
Valve Stem [D]
Valve Seat [E]
Valve Opened [F]

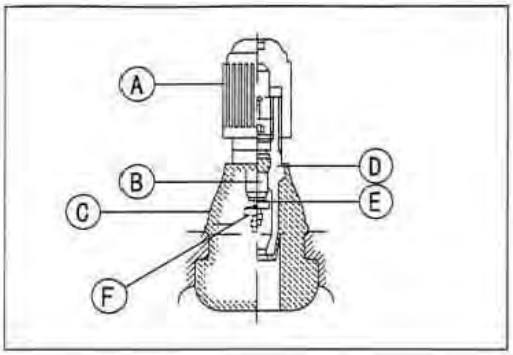

● Install a new valve [A] in the rear rim.

Torque - Rear Air Valve Nuts: 1.5 N·m (0.15 kg·m, 13 in·lb)

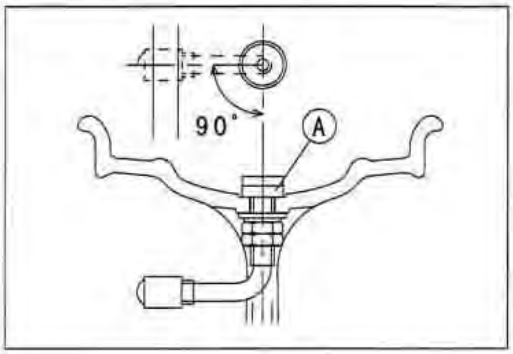

● Apply a soap and water solution, or rubber lubricant to the rim flange and tire beads.
● Check the tire rotation mark on the front and rear tires and install them on the rim accordingly.
Tire Rotation Mark [A]
Rotation Direction [B]

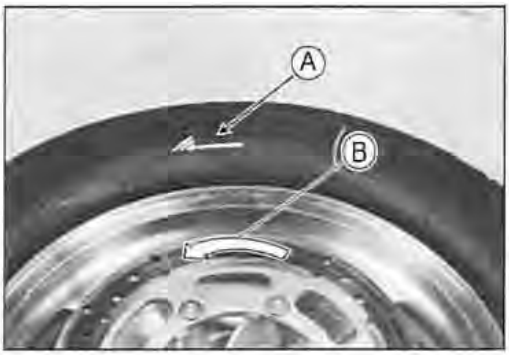

● Position the tire on the rim so that the valve [A] is at the tire balance mark [B] (the chalk mark made during removal, or the yellow paint mark on a new tire).
● Install the tire bead over the rim flange using a commercially available tire changer.
● Lubricate the tire beads and rim flanges with a soap and water solution or rubber lubricant to help seat the tire beads in the sealing surfaces of the rim while inflating the tire.
● Center the rim in the tire beads, and inflate the tire with compressed air until the tire beads seat in the sealing surfaces.

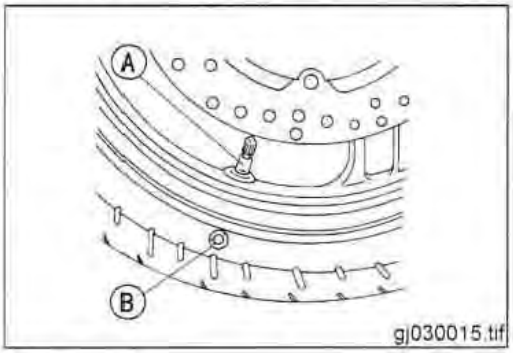

⚠ WARNING

Be sure to install the valve core whenever inflating the tire, and do not inflate the tire to more than 400 kPa (4.0 kg/cm², 57 psi). Overinflation can explode the tire with possibility of injury and loss of life.

Wheels (Rims)

- Check to see that the rim lines [A] on both sides of the tire sidewalls are parallel with the rim flanges.

★ If the rim flanges and tire sidewall rim lines are not parallel, remove the valve core.

- Lubricate the rim flanges and tire beads.
- Install the valve core and inflate the tire again.
- After the tire beads seat in the rim flanges, check for air leakage.

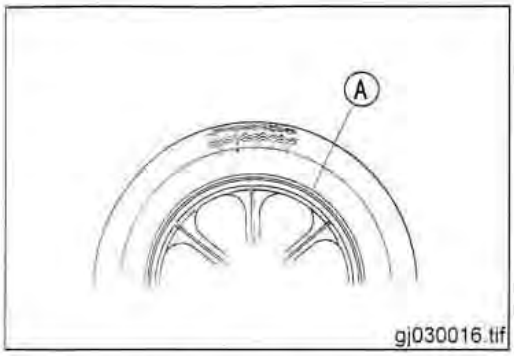

- Inflate the tire slightly above standard inflation.
- Use a soap and water solution or submerge the tire, and check for bubbles that would indicate leakage.
- Adjust the air pressure to the specified pressure (see Tire Inspection).
- Install the brake disc(s) so that the marked side [A] faces out.
- Apply a non-permanent locking agent, and tighten the brake disc bolts [B].

Torque - Brake Disc Bolts: 27 N·m (2.8 kg·m, 20.0 ft·lb)

- Adjust the wheel balance.



⚠WARNING

Check and balance the wheel when a tire is replaced with a new one.

Tire Repair

Currently two types of repair for tubeless tires have come into wide use. One type is called a temporary (external) repair which can be carried out without removing the tire from the rim, and the other type is called permanent (internal) repair which requires tire removal. It is generally understood that higher running durability is obtained by permanent (internal) repairs than by temporary (external) ones. Also, permanent (internal) repairs have the advantage of permitting a thorough examination for secondary damage not visible from external inspection of the tire. For these reasons, Kawasaki does not recommend temporary (external) repair. Only appropriate permanent (internal) repairs are recommended. Repair methods may vary slightly from make to make. Follow the repair methods indicated by the manufacturer of the repair tools and materials so that safe results can be obtained.

Hub Bearings (Wheel Bearings)

Removal

- Remove the wheel, and take out the following.
  Collars
  Coupling (Out of Rear Hub)
  Grease Seals
  Circlip [A]

Special Tool - Inside Circlip Pliers: 57001-143

- Remove the speedometer gear drive [B] from the front hub.



- Use the bearing remover (special tools) to remove the hub bearings [A].

CAUTION

Do not lay the wheel on the ground with the disc facing down. This can damage or warp the disc. Place blocks under the wheel so that the disc does not touch the ground.

Special Tools - Bearing Remover Shaft, ϕ13: 57001-1377 [B]
Bearing Remover Head, ϕ20 × ϕ22: 57001-1293 [C]

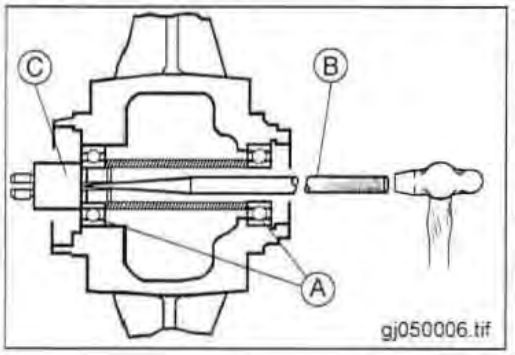

Installation

- Before installing the wheel bearings, blow any dirt or foreign particles out of the hub with compressed air to prevent contamination of the bearings.
- Replace the bearings with new ones.

NOTE

Install the bearings so that the marked side faces out.

- Install the bearings by using the bearing driver set which does not contact the bearing inner race.
- First, press the following bearings in until they bottom out.
  Left Bearing (Front Hub) [A]
  Right Bearing (Rear Hub) [A]

Special Tool - Bearing Driver Set: 57001-1129 [B]

- Next, install the following:
  New Circlip
  Distance Collar
  Right Bearing (Front Hub)
  Left Bearing (Rear Hub)

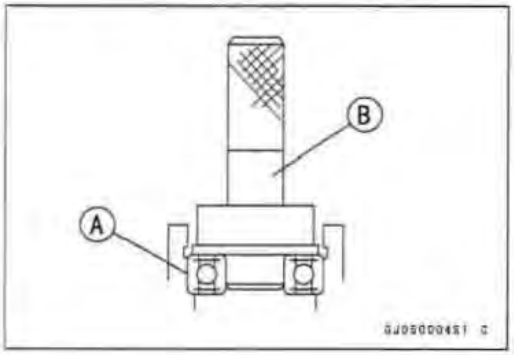

Replace the circlips with new ones.

Special Tool - Inside Circlip Pliers: 57001-143

Replace the grease seals with new ones.
Press in the grease seals [A] so that seal surface is flush [B] with the end of the hole.
Apply high temperature grease to the grease seal lips.

Special Tool - Bearing Driver Set: 57001-1129 [C]

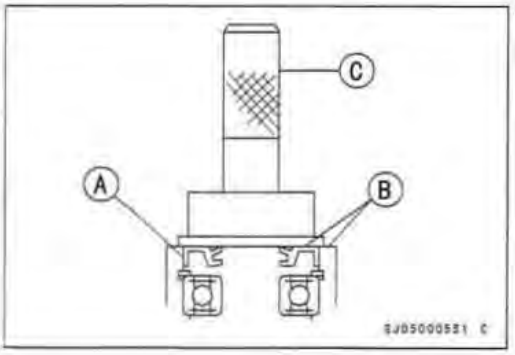

Hub Bearings (Wheel Bearings)

- Put the speedometer drive [A] onto the front wheel hub notches [B], then install the circlip.

Special Tool - Inside Circlip Pliers: 57001-143



Inspection

Since the hub bearings are made to extremely close tolerance, the clearance cannot normally be measured.

NOTE

Do not remove any bearings for inspection. If any bearings are removed, they will need to be replaced with new ones.

- Turn each bearing in the hub back and forth [A] while checking for plays, roughness, or binding.

★ If bearing play, roughness, or binding is found, replace the bearing.

- Examine the bearing seal [B] for tears or leakage.

★ If the seal is torn or is leaking, replace the bearing.

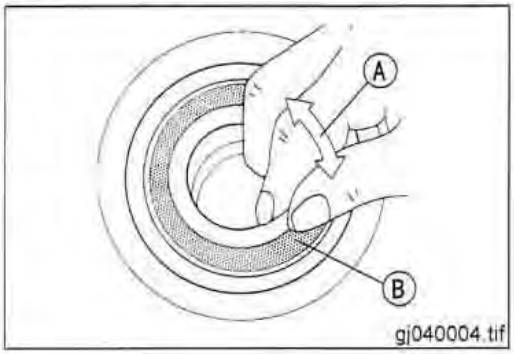

Lubrication

NOTE

Since the hub bearings are packed with grease and sealed, lubrication is not required.

Speedometer Gear Housing

Disassembly

NOTE

○ *It is recommended that the speedometer unit be replaced rather than attempting to repair the components.*

Lubrication

● Clean and grease [A] the speedometer gear housing [B].



Final Drive

Table of Contents

Exploded View 10-2
Specifications 10-5
Final Gear Case Oil 10-6
  Oil Level Inspection 10-6
  Oil Change 10-6
Final Gear Case 10-7
  Removal 10-7
  Installation 10-7
  Disassembly 10-7
  Assembly 10-9
  Bevel Gear Inspection 10-10
  Pinion Gear Joint Inspection 10-10
  Final Bevel Gear Adjustment 10-11
  Backlash Adjustment 10-12
  Tooth Contact Adjustment 10-13
  Bevel Gear Inspection 10-13
Propeller Shaft 10-15
  Removal 10-15
  Installation 10-15
  Propeller Shaft Joint Lubrication 10-16
  Propeller Shaft Inspection 10-16
  Sliding Joint Inspection 10-16
Front Bevel Gears 10-17
  Front Gear Case Removal 10-17
  Front Gear Case Installation 10-17
  Front Gear Case Disassembly 10-17
  Driven Gear Disassembly 10-19
  Driven Gear Assembly 10-20
  Damper Cam Removal 10-20
  Damper Cam Installation 10-21
  Front Bevel Gear Adjustment 10-21
  Preload Adjustment 10-22
  Preload Measurement with Spring Scale 10-22
  Backlash Adjustment 10-24
  Tooth Contact Adjustment 10-25
  Bevel Gear Inspection 10-26
  Cam Damper Inspection 10-26
Bearing and Oil Seal 10-27
  Ball or Needle Bearing Replacement 10-27
  Ball Bearing Wear 10-27
  Tapered Roller Bearing Inspection 10-27
  Needle Bearing Inspection 10-28
  Oil Seal Inspection 10-28

Exploded View

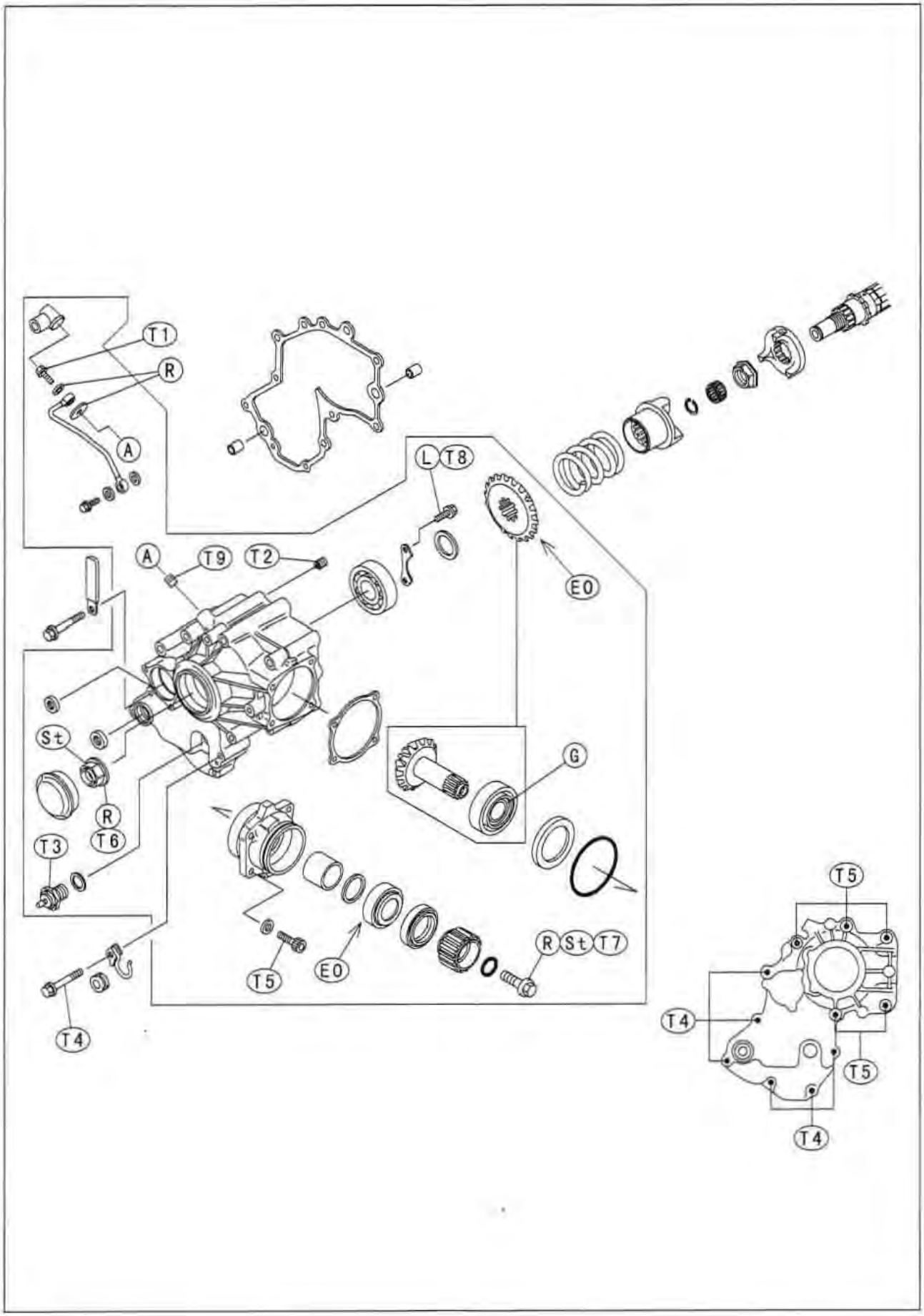

Exploded View

Front Gear Case

EO: Apply engine oil.
G: Apply grease.
R: Replacement Parts
St: Stake the fasteners.
T1: 12 N·m (1.2 kg·m, 104 in·lb)
T2: 18 N·m (1.8 kg·m, 13.0 ft·lb)
T3: 15 N·m (1.5 kg·m, 11.0 ft·lb)
T4: 9.8 N·m (1.0 kg·m, 87 in·lb)
T5: 25 N·m (2.5 kg·m, 18.0 ft·lb)
T6: 265 N·m (27.0 kg·m, 195 ft·lb)
T7: 135 N·m (14.0 kg·m, 100 ft·lb)
T8: 8.8 N·m (0.90 kg·m, 78 in·lb)
T9: 2.9 N·m (0.30 kg·m, 26 in·lb)

Exploded View

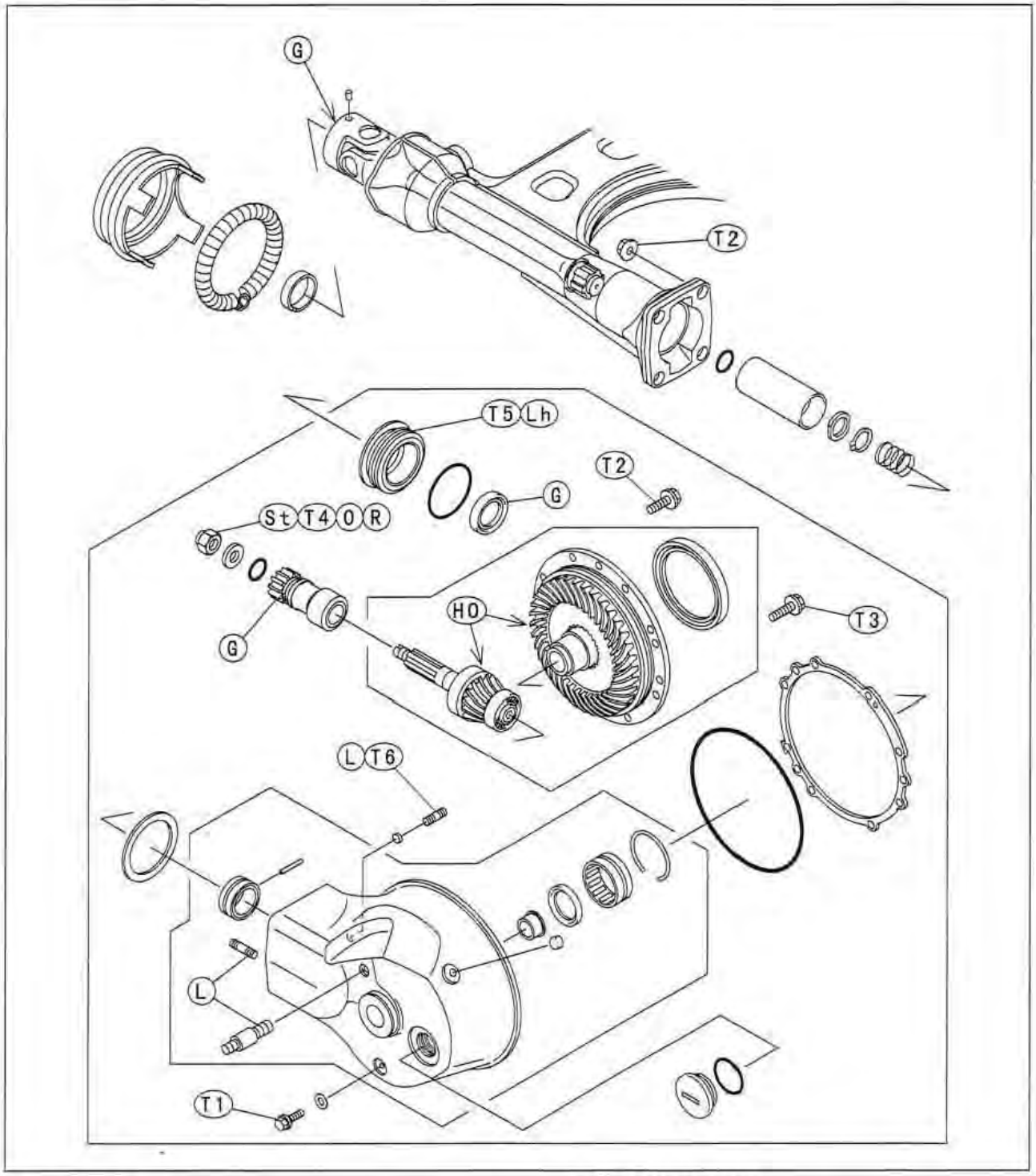

Final Gear Case

G: Apply grease.
L: Apply a non-permanent locking agent.
Lh: Left-hand Threads
O: Apply oil.
HO: Apply hypoid gear oil.
R: Replacement Parts
St: Stake the fasteners.
T1: 8.8 N·m (0.90 kg·m, 78 in·lb)
T2: 34 N·m (3.5 kg·m, 25 ft·lb), ◇10
T3: 23 N·m (2.3 kg·m, 16.5 ft·lb), ◇8
T4: 120 N·m (12.0 kg·m, 87 ft·lb)
T5: 245 N·m (25.0 kg·m, 180 ft·lb)
T6: 16 N·m (1.6 kg·m, 11.5 ft·lb)

Specifications

Item		Standard
Final Gear Case Oil		
	Grade	API GL-5 hypoid gear oil
	Viscosity	When above 5°C (41°F) SAE90
		When below 5°C (41°F) SAE80
	Oil level	Filler opening bottom
	Amount	200 mL
Final Bevel Gear Backlash		0.06 ~ 0.09 mm (at gear hub spline)
Propeller Shaft Joint Grease		20 mL, high-temperature grease
Front Bevel Gear Backlash		0.10 ~ 0.15 mm (at gear tooth)
Preload for Front Bevel Gear Bearing		
	Torque wrench	0.5 ~ 0.9 N·m (0.05 ~ 0.09 kg·m, 4 ~ 8 in·lb)
	Spring scale	2.5 ~ 4.5 N (0.25 ~ 0.45 kg, 0.6 ~ 1.0 lb)

Special Tools - Oil Seal & Bearing Remover: 57001-1058
Jack: 57001-1238
Attachment Jack: 57001-1398
Pinion Gear Holder: 57001-1165
Bearing Retainer Wrench: 57001-1251
Fork Oil Seal Driver: 57001-1104
Drive Shaft Holder: 57001-1407
Bearing Driver Set: 57001-1129
Bearing Driver: 57001-382
Damper Cam Holder: 57001-1025
Driven Gear Holder: 57001-1027
Bearing Puller: 57001-158
Bearing Puller Adapter: 57001-317

Final Gear Case Oil

Oil Level Inspection



- Support the motorcycle perpendicular to the ground.
- Unscrew the filler plug [A]. The oil level [B] should come to the bottom of the filler opening.

★ If it is low, first check the final gear case for oil leakage, remedy it if necessary, and add oil through the filler opening. Use the same type and brand of oil that is already in the final gear case.

- Install the filler plug.

Oil Change

- Warm up the oil by running the motorcycle so that the oil will pick up any sediment and drain easily. Stop the motorcycle and turn the ignition switch OFF.
- Place an oil pan beneath the final gear case, and remove the drain plug.

⚠WARNING

When draining or filling the final gear case, be careful that no oil gets on the tire or rim. Clean off any oil that inadvertently gets on them with a high-flash point solvent.



- After the oil has completely drained out, install the drain plug [A] with a new gasket.

Torque - Final Gear Case Drain Plug: 8.8 N·m (0.90 kg·m, 78 in·lb)

- Fill the final gear case with the specified oil and quantity.

Final Gear Case Oil:

Amount:	**200 mL**
Grade:	**API GL-5 hypoid gear oil**
Viscosity:	**When above 5°C (41°F) SAE 90**
	When below 5°C (41°F) SAE 80

NOTE

The term "GL-5" indicates a quality and additive rating. A "GL-6" rated hypoid gear oil can also be used.

- Be sure the O-ring is in place, and install the filler plug.

Final Gear Case

Removal

★ If the final gear case is to be disassembled, drain the final gear case oil.

- Remove the rear wheel (see Wheels/Tires chapter).
- Remove the left shock absorber [A] from its studs by taking off the nuts.
- Remove the final gear case by taking off the nuts [B]. The spring comes off with the case.

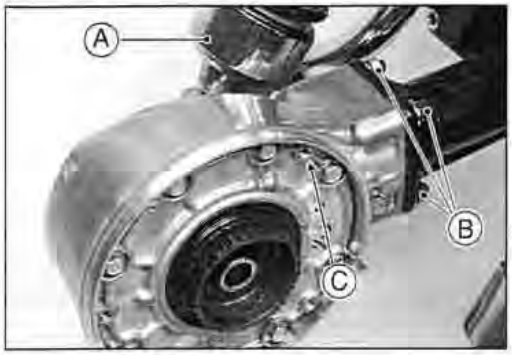

NOTE

If the final gear case is full of oil, place the case so that the breather hole [C] is on top.

Installation

- Lubricate the propeller shaft joint (see Propeller Shaft Joint Lubrication).
- Install the spring so that the smaller diameter end [A] faces toward the final gear case.
- Fit the pinion gear splines into the propeller shaft joint while turning the ring gear hub.
- Tighten the final gear case mounting nuts to the specified torque.

Torque - Final Gear Case Mounting Nuts: 34 N·m (3.5 kg·m, 25 ft·lb)

★ If the final gear case oil was drained, fill the case with oil.

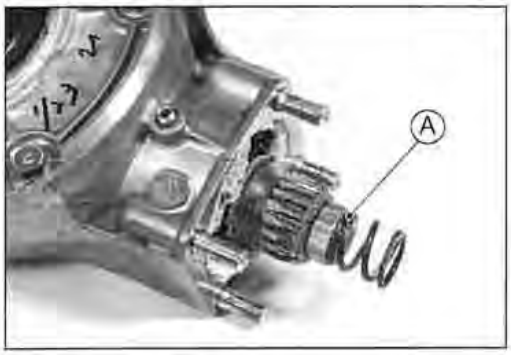

Disassembly

- Remove the final gear case cover bolts [A].
- Use three tapped holes [B] to lift the ring gear assy from the gear case. The shim(s) comes off with the assy.

NOTE

Do not disassemble the ring gear assy (ring gear, ring gear hub, and final gear case cover), but the oil seal can be removed.

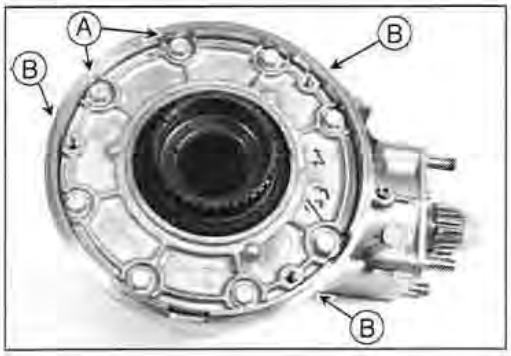

- To remove the ring gear oil seal [A], heat the ring gear assy in an oil bath to **120 ~ 150°C (248 ~ 302°F)**, then pry out the oil seal with an awl or other tool. Be careful not to scratch the sealing surface on the ring gear hub.

CAUTION
Do not heat the case with a torch. This will warp the case.

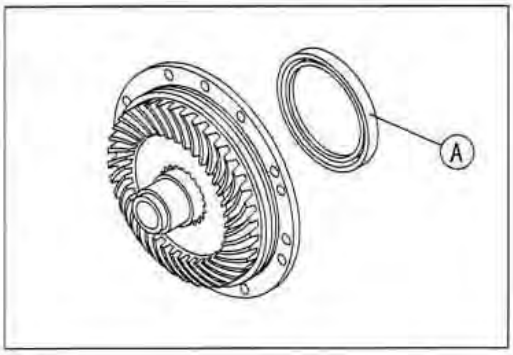

- Remove the snap ring [A] and pull out the needle bearing [B].

★ If the small ring gear oil seal [C] is damaged, remove it using the oil seal and bearing remover.

Special Tool - Oil Seal & Bearing Remover [D]: 57001-1058

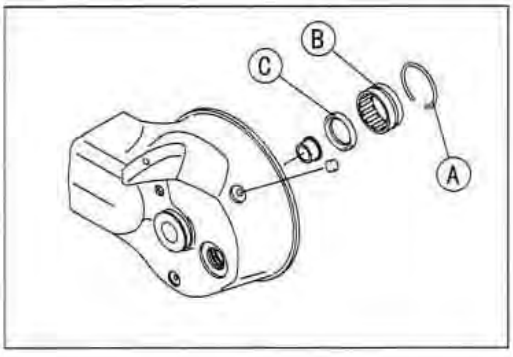

Final Gear Case

○ Remove the small ring gear oil seal if damaged.

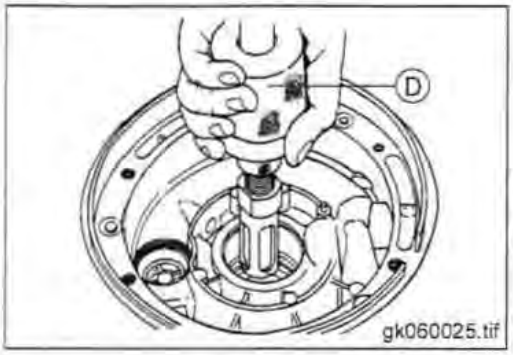

Final Gear Case

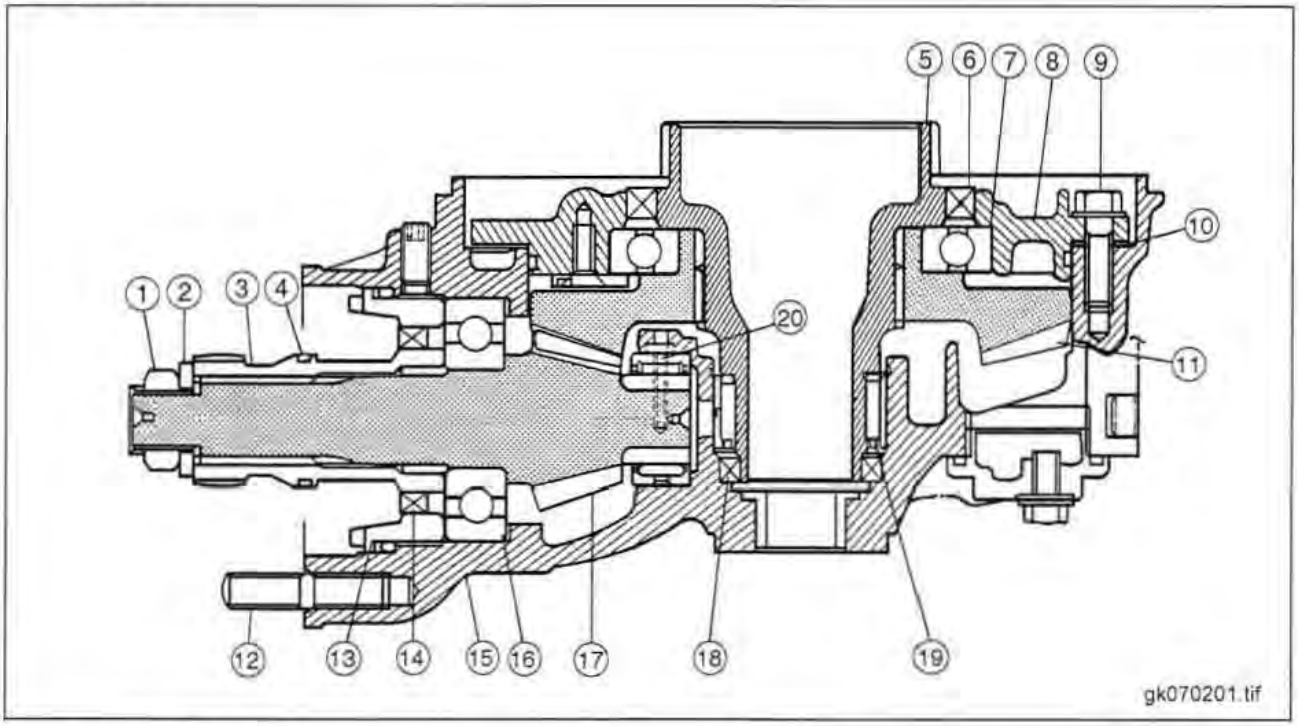

1. Pinion Gear Nut
2. Washer
3. Pinion Gear Joint
4. O-ring
5. Ring Gear Hub
6. Ring Gear Oil Seal
7. Ball Bearing
8. Final Gear Case Cover
9. Cover Mounting Bolts
10. Ring Gear Shim(s)
11. Ring Gear
12. Studs
13. Pinion Bearing Retainer
14. Oil Seal
15. Final Gear Case
16. Ball Bearing (Four-point Contact)
17. Pinion Gear
18. Small Ring Gear Oil Seal
19. Needle Bearing
20. Spring Pin

Final Gear Case

- Pry open the staking [A] on the pinion gear nut [B], and unscrew the nut using the pinion gear holder [C].

Special Tool - Pinion Gear Holder: 57001-1165

- Remove the washer and pinion gear joint with the O-ring.
- Pull out the oil seal in the pinion bearing retainer using a puller.

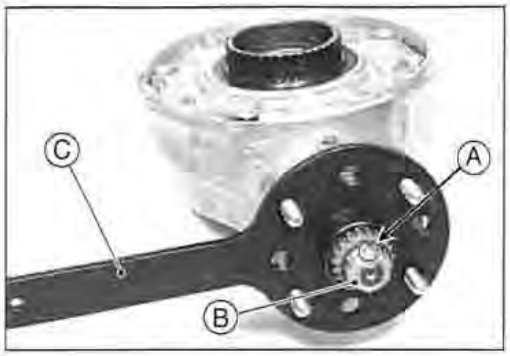

- Remove the retainer stop screw [A] and then unscrew the pinion bearing retainer with a holder [B] and bearing retainer wrench [C].

NOTE

The bearing retainer has left-hand threads, so, turn it clockwise for removal.

Special Tool - Bearing Retainer Wrench: 57001-1251

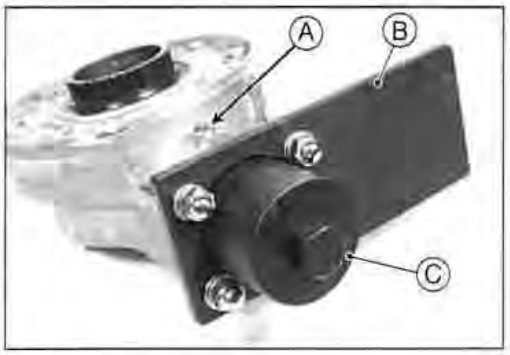

- Take the retainer [A] and pinion gear assy [B] out of the final gear case.
- Pull out the shim, stop screw and plug from the final gear case.

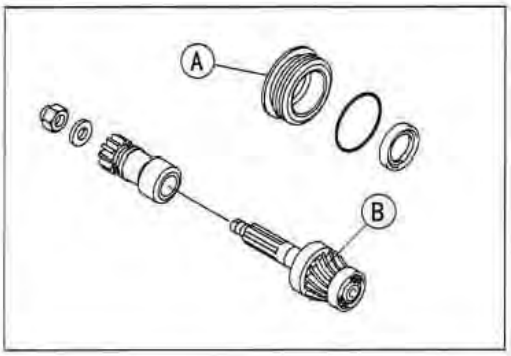

Assembly

- The ring gear and pinion gear are lapped as a set in the factory to get the best tooth contact. They must be installed as a pair, and never replace one without the other.
- Install the ring gear oil seal with its spring [A] facing inward using a suitable driver until the face of the seal is even [B] with the end of the hole.

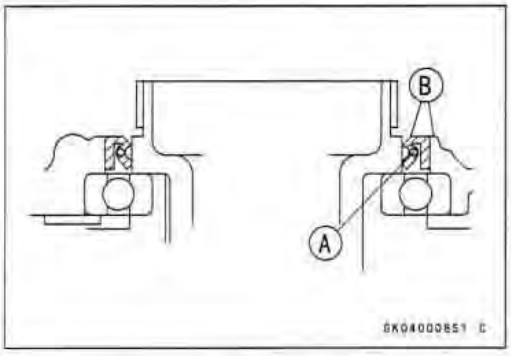

- Press the small ring gear oil seal [A] until it bottoms out with its spring [B] facing inward.

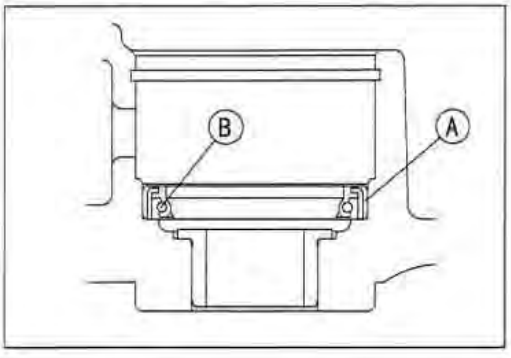

Final Gear Case

- Blow the breather hole [A] in the final gear case cover clean with compressed air.
- Apply a non-permanent locking agent to the threads of each stud and install them to the case if they were removed.
- Reinstall the original ring gear shim(s) to keep the gear backlash and the tooth contact unchanged.
- Tighten:

Torque - Final Gear Case Cover Bolts:
ϕ10: 34 N·m (3.5 kg·m, 25 ft·lb)
ϕ8: 23 N·m (2.3 kg·m, 16.5 ft·lb)

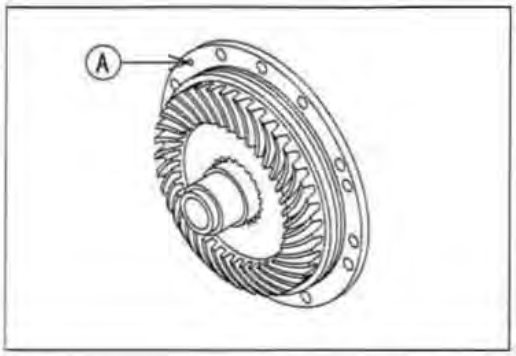

- Install the pinion bearing retainer.
- Reinstall the original pinion gear shim(s) to keep the gear backlash and the tooth contact unchanged.
- Using a holder [B] and bearing retainer wrench [C], tighten the pinion bearing retainer.

Special Tool - Bearing Retainer Wrench: 57001-1251

- Turn the bearing retainer counterclockwise.
- Insert the plug into the retainer stop screw [A].

Non-permanent Locking Agent - Retainer Stop Screw

Torque - Bearing Retainer: 245 N·m (25.0 kg·m, 180 ft·lb)
Retainer Stop Screw: 16 N·m (1.6 kg·m, 11.5 ft·lb)

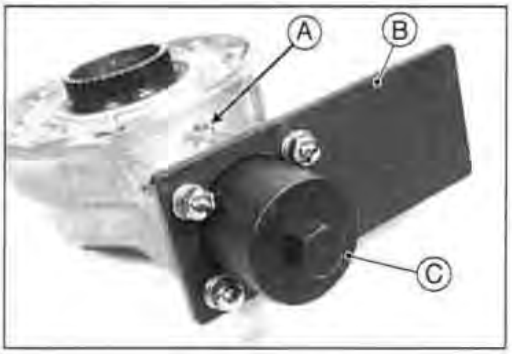

- Using the pinion gear holder [C], tighten the pinion gear nut [B].

Special Tool - Pinion Gear Holder: 57001-1165

Torque - Pinion Gear Nut: 120 N·m (12.0 kg·m, 87 ft·lb)

- Stake [A] the pinion gear nut with a punch.

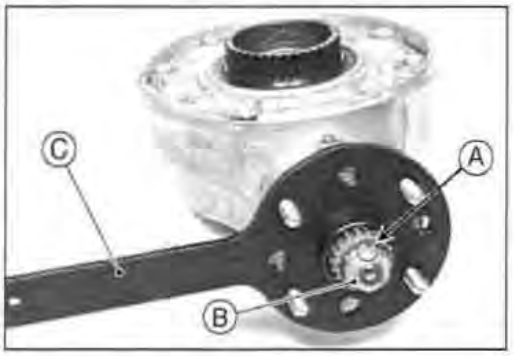

CAUTION

When staking the nut, be careful not to apply shock to the pinion gear and its bearing. Such a shock could damage the pinion gear and/or bearing.

Bevel Gear Inspection

- Visually check the bevel gears for scoring, chipping, or other damage.

★ Replace the bevel gears as a set if either gear is damaged.

Pinion Gear Joint Inspection

- Visually inspect the splines [A] of the pinion gear joint.

★ If they are badly worn or chipped, replace the joint with a new one. Also, inspect the propeller shaft sliding joint.

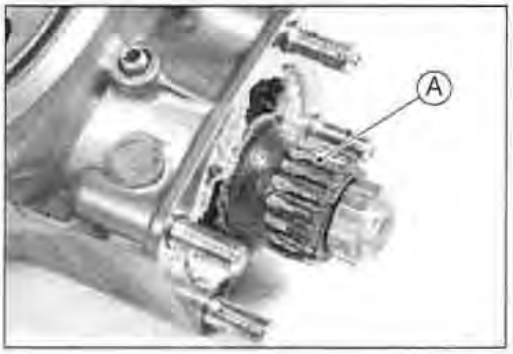

Final Gear Case

Final Bevel Gear Adjustment

- The **backlash** and **tooth contact pattern** of the bevel gears must be correct to prevent the gears from making noise and being damaged.
- After replacing any of the backlash-related parts, be sure to check and adjust the backlash and tooth contact of the bevel gears. First, adjust backlash, and then tooth contact by replacing shims.
- The amount of backlash is influenced by the ring gear position more than by the pinion gear position.
- Tooth contact locations is influenced by pinion gear position more than by ring gear position.

Backlash-Related Parts

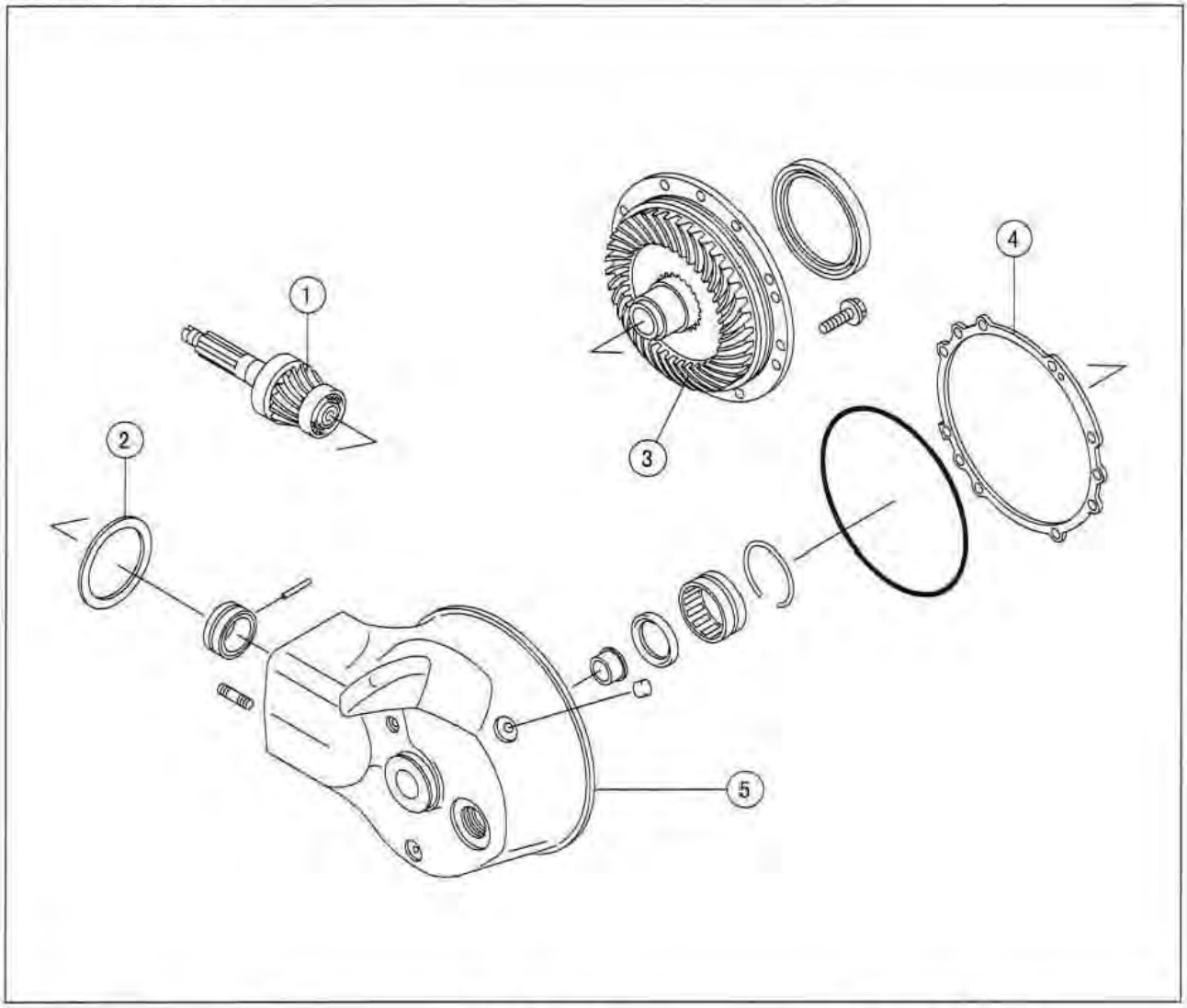

1. Pinion Gear
2. Pinion Gear Shim(s)
3. Ring Gear Assy
4. Ring Gear Shim(s)
5. Final Gear Case

Final Gear Case

Ring Gear Shims for Backlash Adjustment

Thickness (mm)	Parts Number
0.15	92025-1783
0.5	92025-1784
0.6	92025-1785
0.7	92025-1786
0.8	92025-1787
0.9	92025-1788
1.0	92025-1789
1.2	92025-1790

Pinion Gear Shims for Tooth Contact Adjustment

Thickness (mm)	Parts Number
0.10	92025-1733
0.15	92025-1734
0.5	92025-1735
0.6	92025-1736
0.7	92025-1737
0.8	92025-1738
0.9	92025-1739
1.0	92025-1740
1.2	92025-1741

Backlash Adjustment

- Clean any dirt and oil off the bevel gear teeth with a high-flash point solvent.

CAUTION

Do not install the O-ring or oil seals during adjustment.

- Install the pinion gear assy with the primary shim (**1.0 mm thickness**), and tighten the pinion bearing retainer to the specified torque.

Torque - Pinion Bearing Retainer: 245 N·m (25 kg·m, 180 ft·lb)

- Install the ring gear assy with the primary shim (**1.0 mm thickness**), and tighten the cover bolts to the specified torque.

Torque - Final Gear Case Cover Bolts:
M10: 34 N·m (3.5 kg·m, 25 ft·lb)
M8: 23 N·m (2.3 kg·m, 16.5 ft·lb)

- Check the backlash during tightening of the cover bolts, and stop tightening them immediately if the backlash disappears. Then, change the ring gear shim to a thicker one.

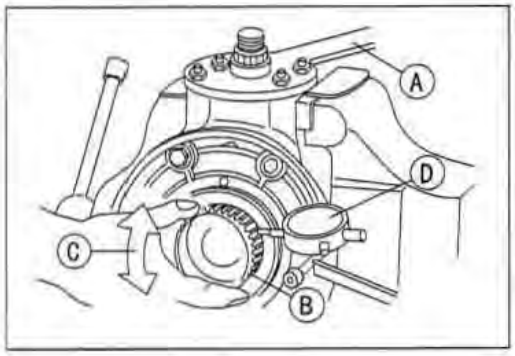

- Mount a dial gage [D] on a vise so that the tip of the gage is against the splines of the ring gear hub.
- To measure the backlash, turn the ring gear hub [B] back and forth [C] while holding the pinion gear steady with the pinion gear holder [A]. The difference between the highest and the lowest gage reading is the amount of backlash.

Special Tool - Pinion Gear Holder: 57001-1165

- Measure backlash at three locations equally spaced on the splines.

Final Bevel Gear Backlash: 0.06 ~ 0.09 mm
(at ring gear hub splines)

★ If the backlash is out of the limit, replace the ring gear shims. To increase backlash, increase the thickness of the shim(s). To decrease backlash, decrease the thickness of the shim(s).
★ Change the thickness a little at a time.
- Recheck the backlash, and readjust as necessary.

Final Gear Case

Tooth Contact Adjustment

- Clean any dirt and oil off the bevel gear teeth with a high-flash point solvent.
- Apply checking compound to 4 or 5 teeth of the pinion gear.

NOTE

Apply checking compound to the teeth in a thin, even coat with a fairly stiff paint brush. If painted too thickly, the exact tooth pattern may not appear.

The checking compound must be smooth and firm, with the consistency of tooth paste.

Special compounds are available at automotive supply stores for the purpose of checking differential gear tooth patterns and contact.

- Install the shim(s) and pinion gear assy, and tighten the bearing retainer to the specified torque.

Torque - Pinion Bearing Retainer: 245 N·m (25 kg·m, 180 ft·lb)

- Install the shim(s) and ring gear assy, and tighten the cover bolts to the specified torque.

Torque - Final Gear Case Cover Bolts:
M10: 34 N·m (3.5 kg·m, 25 ft·lb)
M8: 23 N·m (2.3 kg·m, 16.5 ft·lb)

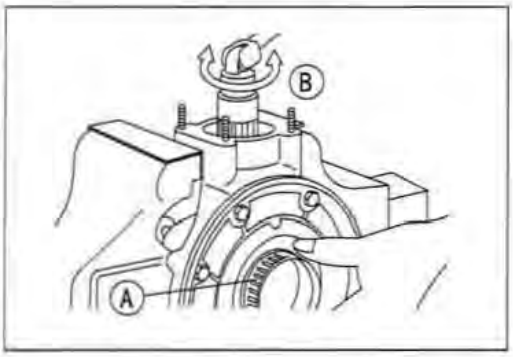

- Turn the pinion gear for one revolution [B] back and forth, while creating a drag on the ring gear hub [A].
- Remove the ring gear assy and pinion gear assy to check the drive pattern and coast pattern of the bevel gear teeth. The tooth contact patterns of both (drive and coast) sides should be centrally located between the top and bottom of the tooth. The drive pattern can be a little closer to the toe and the coast pattern can be a somewhat longer and closer to the toe.

★ If the tooth contact pattern is incorrect, replace the pinion gear shim(s), following the examples shown. Then erase the tooth contact patterns, and check them again. Also check the backlash every time the shim(s) are replaced. Repeat the shim change procedure as necessary.

NOTE

If the backlash is out of the standard range after changing the pinion gear shim(s), replace the ring gear shim(s) to correct the backlash before checking the tooth contact pattern.

Bevel Gear Inspection

- Remove the ring gear assy and pinion gear from the final gear case (see Ring Gear Disassembly and Pinion Gear Disassembly).
- Visually check the bevel gears for scoring, chipping, or other damage.

★ Replace the bevel gears as a set if either gear is damaged.

Final Gear Case

Correct Tooth Contact Pattern: No adjustment is required.

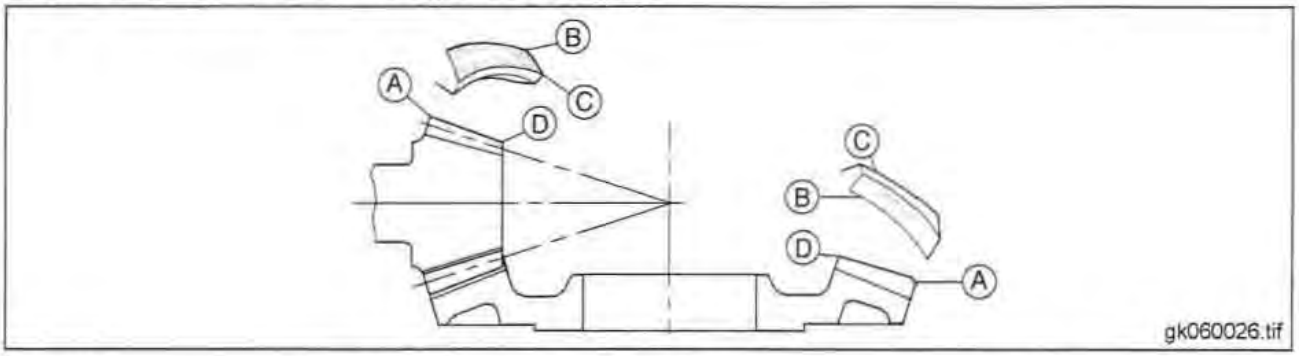

Heel [A] Bottom [B] Top [C] Toe [D]

Incorrect Tooth Contact Patterns (Example 1)

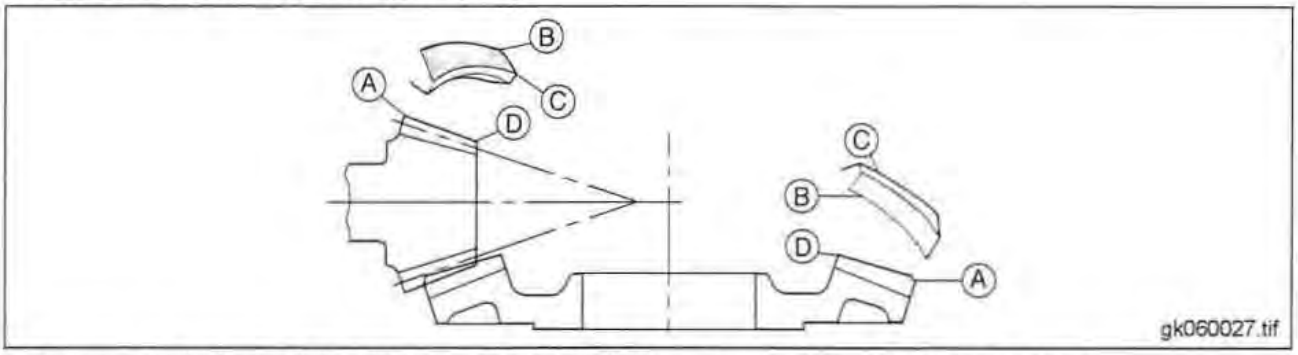

- Decrease the thickness of the pinion gear shim(s) by **0.05 mm** to correct the pattern shown above.

Heel [A] Bottom [B] Top [C] Toe [D]

Incorrect Tooth Contact Ptterns (Example 2)

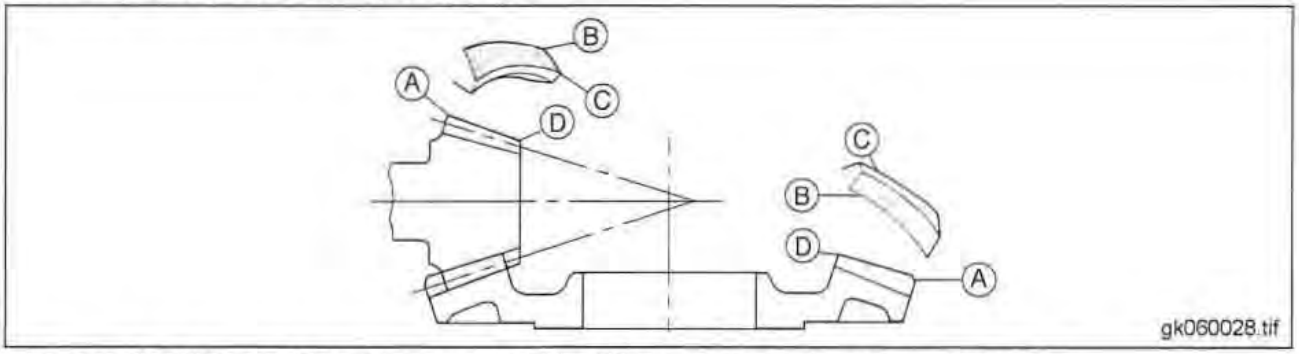

- Increase the thickness of the pinion gear shim(s) by **0.05 mm** to correct the pattern shown above.

Heel [A] Bottom [B] Top [C] Toe [D]

Propeller Shaft

Removal

- Remove:
  Rear Wheel (see Wheels/Tires chapter)
  Final Gear Case (see this chapter)
- Remove the propeller shaft from the front driven gear joint.
- Turn the propeller shaft so that the lockpin access hole [A] in the propeller shaft comes outside.

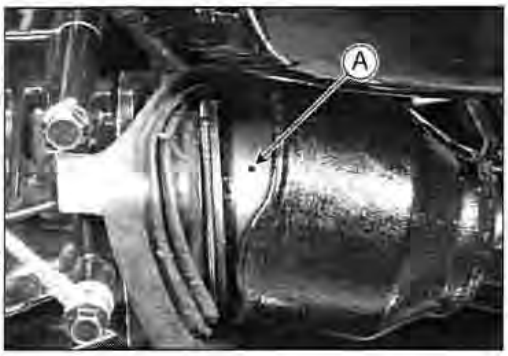

- Move back the propeller shaft and slip the propeller shaft off the driven gear joint while pushing on the lockpin.
  Propeller Shaft [A]
  Universal Joint [B]
  Lockpin [C]
  Spring [D]
  Driven Gear Joint [E]

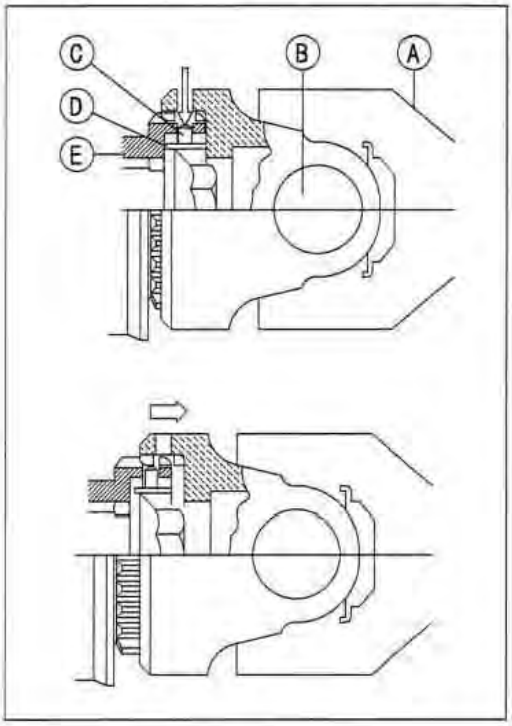

- Remove the circlip [B] from the rear end of the propeller shaft [A] using a circlip pliers.
- Remove the washer [C] and pull out the propeller shaft sliding joint [D].

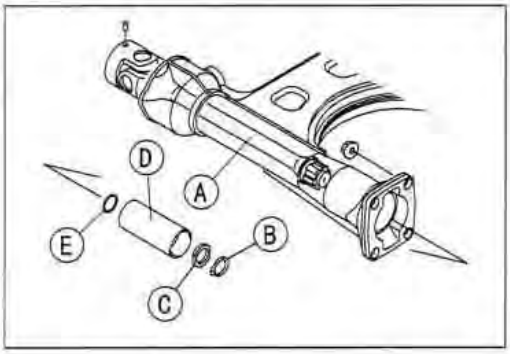

Installation

- Check the O-ring [E] on the rear end of the propeller shaft for any kind of damage, and replace it if necessary.
- Lubricate the propeller shaft joint (see Propeller Shaft Joint Lubrication).
- After connecting the propeller shaft to the driven gear joint, pull the propeller shaft rearward to check that the shaft is secured in place by the lockpin.

Propeller Shaft

Propeller Shaft Joint Lubrication

- Wipe the old grease off the propeller shaft sliding joint and pinion joint.
- Pack the propeller shaft sliding joint with 20 mL (16 grams) of high temperature grease [A].

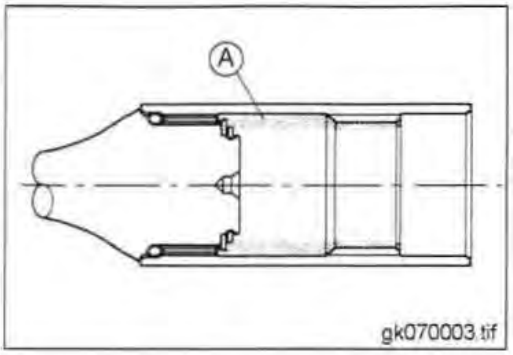

Propeller Shaft Inspection

- Check that the universal joint [A] works smoothly without rattling or sticking.

★ If it does not work smoothly, the needle bearings of the universal joint are damaged. Replace the propeller shaft assy with a new one.

- Visually inspect the bearing of the shaft and the wear of the splines [B] at the rear end of the shaft.

★ If it is bent at all, replace the propeller shaft assy. Do not attempt to straighten a bent shaft.

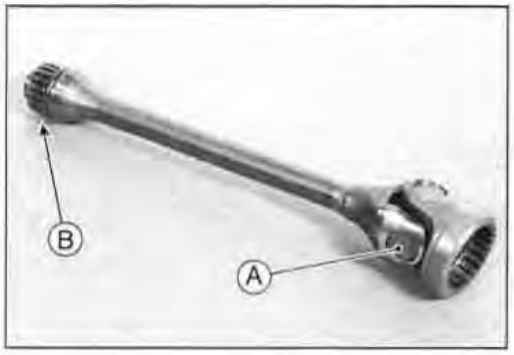

Sliding Joint Inspection

- Visually inspect the internal splines [B] of the propeller shaft sliding joint [A].

★ If they are badly worn or chipped, replace the joint with a new one.

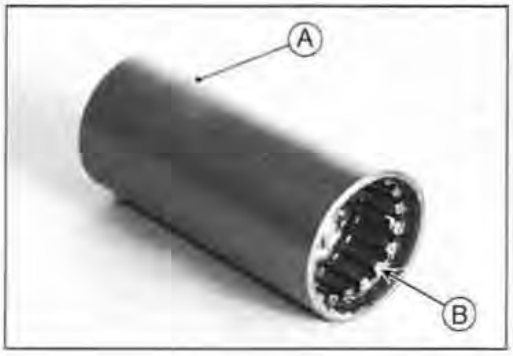

Front Bevel Gears

Front Gear Case Removal

- Remove:
  Engine (see Engine Removal/Installation chapter)
  Rear Shift Lever [A]
- Unscrew the front gear case bolts [B] and remove the front gear case [C].

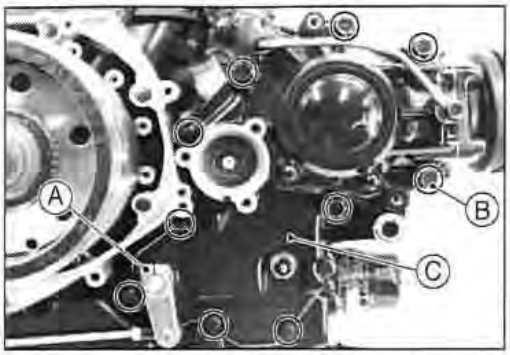

The cam follower [A] and the damper spring [B] come off with the gear case.

- Check that the shift shaft oil seal and replace it if damaged.

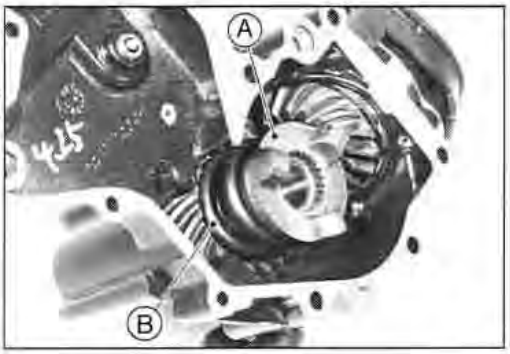

Front Gear Case Installation

- Tighten the front gear case bolts to the specified torque.

Torque - Front Gear Case Bolts:
M8: 25 N·m (2.5 kg·m, 18.0 ft·lb)
M6: 9.8 N·m (1.0 kg·m, 87 in·lb)

- When installing the oil pipe, tighten the front banjo bolt [B] first, then the rear banjo bolt while holding the pipe downward [A].

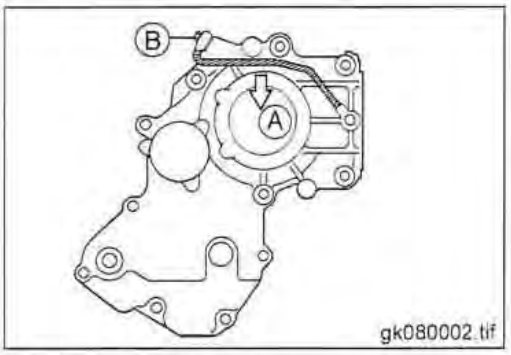

Front Gear Case Disassembly

- Remove:
  Front Gear Case (see this chapter)
  Cam Follower
  Damper Spring
  Rubber Boots [A]
- Remove the driven gear assy mounting bolts [B] and pry the assy [C] off the case.

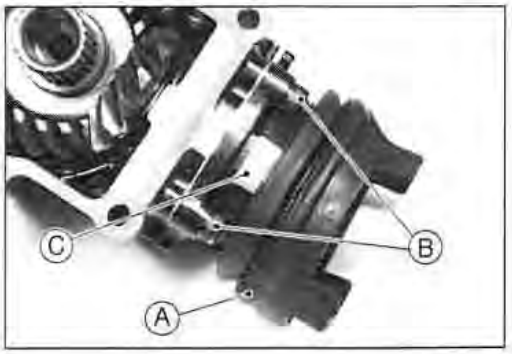

Front Bevel Gears

Pry Points [A]

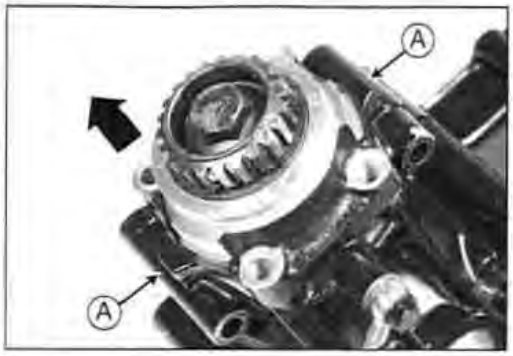

- Remove the drive gear assy as follows.
- Pry off the gear case cap [A] with a tool.

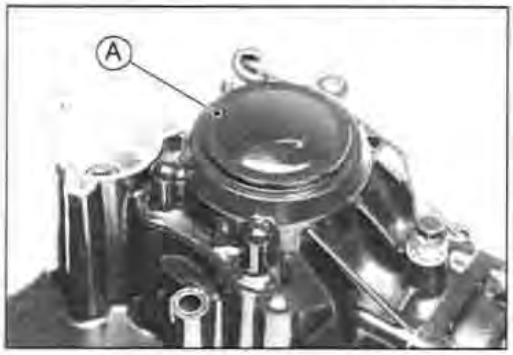

- Pry open the drive gear nut [A] with a small chisel.
- Install:
  Damper Spring
  Cam Follower [B]
- Unscrew the drive gear nut while holding the drive gear shaft with the drive shaft holder [C] (special tool).
  Front Gear Case [D]
  Socket Wrench [E]
  Vise [F]

Special Tool - Drive Shaft Holder: 57001-1407

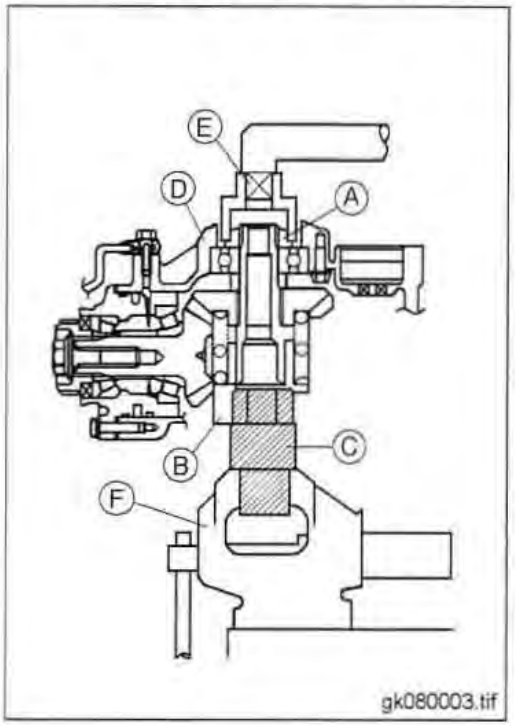

- Pull off the drive gear shaft [A], the drive gear [B], and shim(s) [C].
- Remove the bearing holder [D] from the gear case.
- Remove the drive gear shaft ball bearing [E] using the bearing driver set.
  Front [F]

Special Tool - Bearing Driver Set: 57001-1129

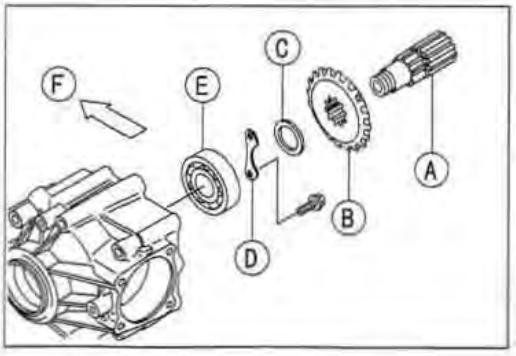

Front Bevel Gears

● Press the drive gear [B] slowly with the driver [A] onto the shaft [C].

Special Tool - Bearing Driver: 57001-382

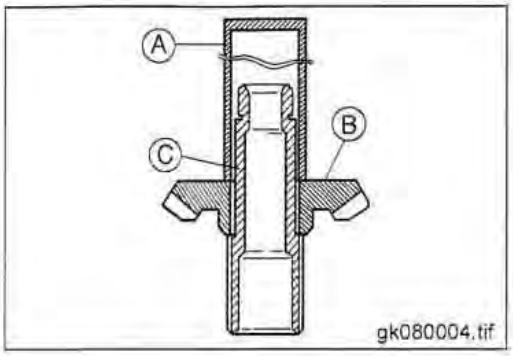

● Be sure to check and adjust the bearing preload, the bevel gear backlash, and tooth contact, when any of the backlash-related parts are replaced (see Front Bevel Gear Adjustment).
● After completing all adjustment, reassemble the front gear case.
○ Replace the drive gear nut with a new one.
○ Apply oil to the threads and seating surface of the nut, and tighten it to the specified torque to settle the bearings in place.
○ Loosen the nut completely and retighten it to the specified torque.

Torque - Drive Gear Nut: 265 N·m (27.0 kg·m, 195 ft·lb)

○ Stake the nut to secure it in place.

CAUTION

When staking the nut, be careful not to apply shock to the shaft and its bearing. Such a shock could damage the shaft and/or bearing.

● Install the shim [C].
● Install the driven gear assy so that the pry ribs [A] and machined surfaces [B] align.
● Tighten the driven gear assy mounting bolts to the specified torque.

Torque - Driven Gear Assy Mounting Bolts: 25 N·m (2.5 kg·m, 18.0 ft·lb)

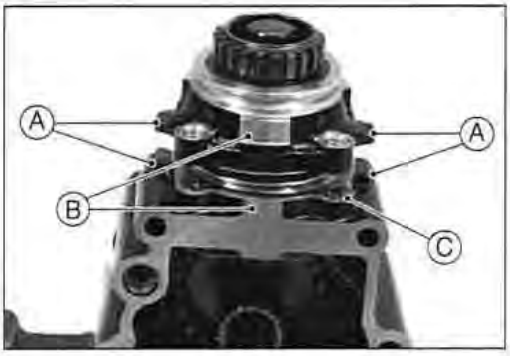

★ If the oil pipe was removed, use a new flat washer on each side of the fittings, and tighten the banjo bolts to the specified torque.

Torque - Oil Pipe Banjo Bolts: 12 N·m (1.2 kg·m, 104 in·lb)

Driven Gear Disassembly

● Holding the driven gear joint with the driven gear holder [A] in a vise, unscrew the driven gear bolt [B].

Special Tool - Driven Gear Holder: 57001-1027

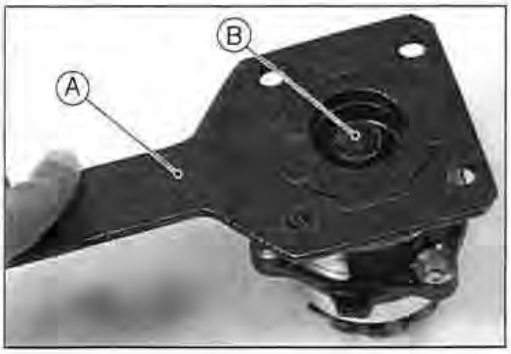

Front Bevel Gears

- Remove the driven gear joint [A] with the O-ring [B].
- Remove the driven gear from the bearing housing.
- Remove the oil seal from the housing with a hook, and pull the tapered roller bearing out of the housing.
- Remove the tapered roller bearing which is pressed onto the driven gear shaft with the bearing puller and adapter.

Special Tools - Bearing Puller: 57001-158
Adapter: 57001-317

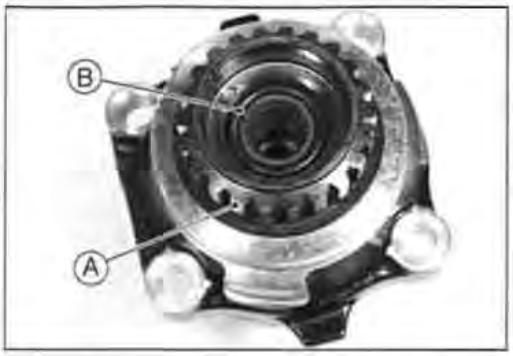

Driven Gear Assembly

- Replace the driven gear bolt with a new one.
- The drive and driven gears are lapped as a set at the factory to get the best tooth contact. They must be replaced as a set.
- Be sure to check and adjust the bearing preload, the bevel gear backlash, and tooth contact (see Front Bevel Gear Adjustment).
- Drive the tapered roller bearing inner race [B] onto the driven gear shaft [C] using the bearing driver [A].

Special Tool - Bearing Driver: 57001-382

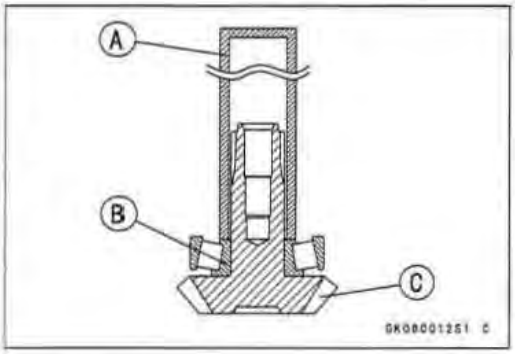

- After completing the bearing preload adjustment, reassemble the driven gear assy.
- Using the bearing driver set, press the oil seal in until the face of the seal is level with the end of the bearing housing hole.

Special Tool - Bearing Driver Set: 57001-1129

- Tighten the driven gear bolt to the specified torque.

Torque - Driven Gear Bolt: 135 N·m (14.0 kg·m, 100 ft·lb)

- Stake [A] the driven gear bolt to prevent it from loosening.

CAUTION

When staking the bolt, be careful not to apply shock to the driven gear and their bearings. Such a shock could damage the driven gear and/or bearings.



Damper Cam Removal

- Remove the front gear case (see this chapter).
- Remove the retainer and needle bearing of the output shaft.
- Remove the clutch push rod guide [C] and bolts, and crankcase bearing retainers and bolts.
- Insert a bolt (ø12 mm, L100 mm) [D] into the engine mounting bolt hole.
- Unscrew the damper cam nut [A] using a damper cam holder [B] (special tool) and deep socket wrench.

Special Tool - Damper Cam Holder: 57001-1025



Front Bevel Gears

Damper Cam Installation

- Replace the damper cam nut with a new one.
- Tighten the damper cam nut to the specified torque.
- Apply oil to the threads and the seating surface of the nut.

Torque - Damper Cam Nut: 226 N·m (23.0 kg·m, 166 ft·lb)

Special Tool - Damper Cam Holder: 57001-1025

Front Bevel Gear Adjustment

In order to prevent one gear from moving away from the other gear under load, the tapered roller bearings must be properly **preloaded**. Also the **backlash** (the distance one gear will move back and forth without moving the other gear) and **tooth contact pattern** of the bevel gears must be correct to prevent the gears from making noise and being damaged.

Above three adjustments are of critical importance and must be carried out in the correct sequence and method.

- Preload adjustment is necessary whenever the driven gear bolt [2] loosened, even if the purpose is not to replace the parts.

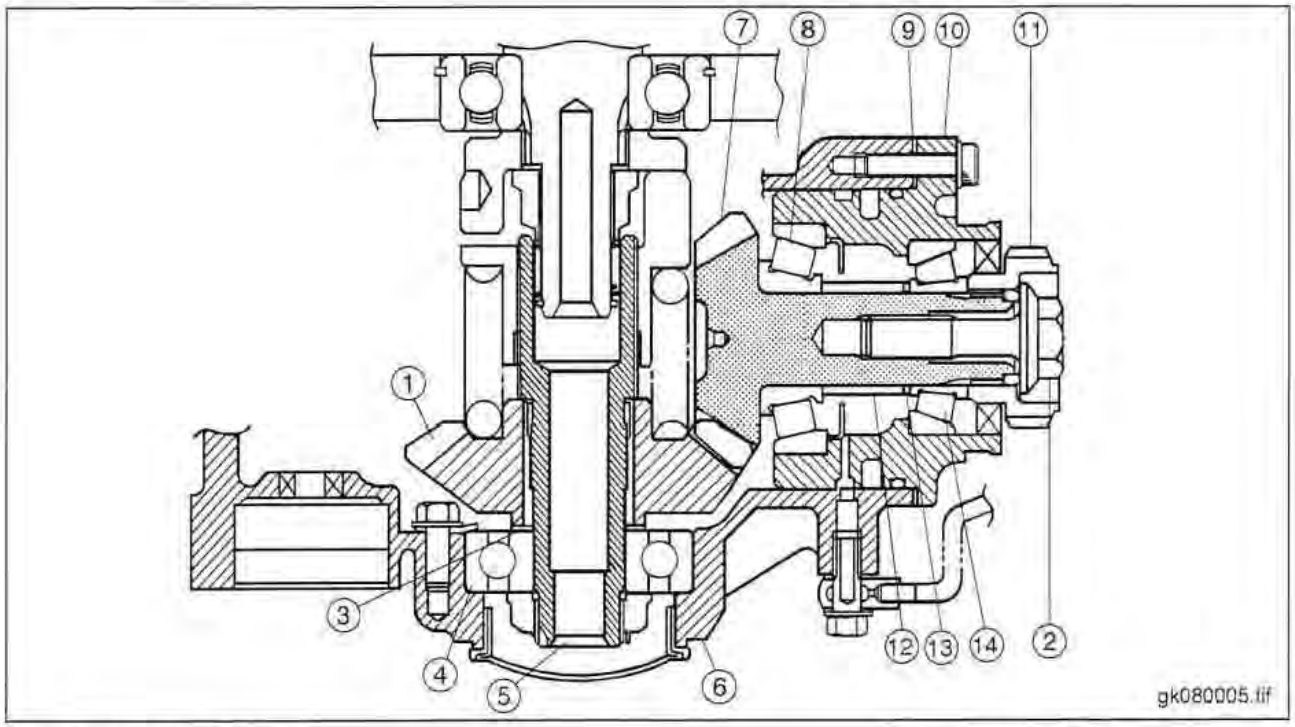

Backlash-related Parts

1. Drive Gear
2. Driven Gear Bolt
3. Drive Gear Shim(s)
4. Ball Bearing
5. Drive Gear Shaft
6. Front Gear Case
7. Driven Gear
8. Tapered Roller Bearing
9. Driven Gear Shim(s)
10. Driven Gear Bearing Housing
11. Driven Gear Joint

Preload-related Parts

12. Collar (Preload Adjustment)
13. Spacer (Preload Adjustment)
14. Tapered Roller Bearing

Front Bevel Gears

Front Bevel Gear Adjustment

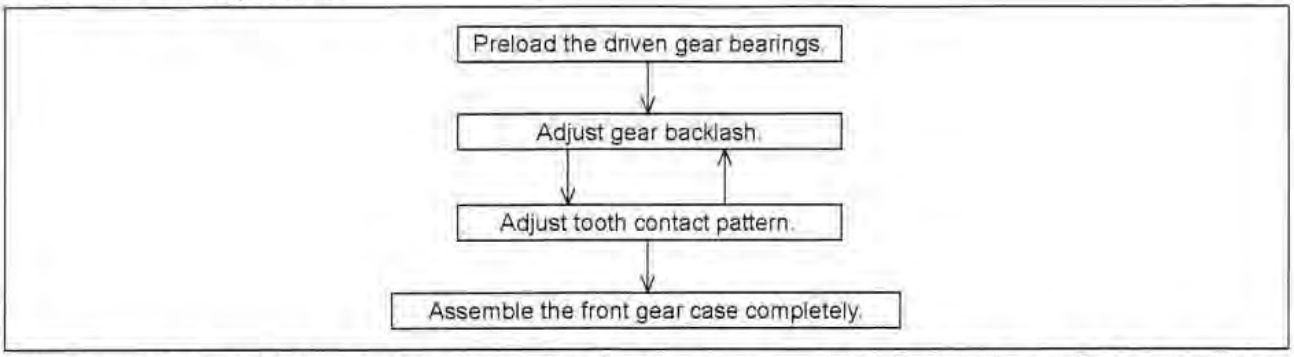

○ When any of the backlash-related parts are replaced, or the driven gear bolt is loosened; even if the purpose is not to replace the parts, be sure to check and adjust the bearing preload, the bevel gear backlash, and tooth contact by replacing shims.

Preload Adjustment

● Install the driven gear assy, and tighten the driven gear nut to the specified torque.

Torque - Driven Gear Bolt: 135 N·m (14.0 kg·m, 100 ft·lb)

○ Do not install the oil seal, and O-ring, and do not stake the bolt until the correct bearing preload is obtained.

CAUTION

To start with, choose a shim or collar so that the bearings are just SNUG with NO play and also with NO preload.
Any overpreload on the bearings could damage the bearings.

● Apply a little engine oil to the bearings, and turn the gear shaft more than 5 turns to allow the bearings to seat.

● Measure the bearing preload. Bearing preload is defined as a force or torque which is needed to start the gear shaft turning.

Preload for Driven Gear Bearing
Using Spring Scale: 2.5 ~ 4.5 N (0.25 ~ 0.45 kg, 0.6 ~ 1.0 lb)
Using Torque Wrench: 0.5 ~ 0.9 N·m (0.05 ~ 0.09 kg·m, 4 ~ 8 in·lb)

NOTE

○ *Preload can be measured either with a spring scale or a beam-type torque wrench. When measured with a spring scale, the preload is designated by force (N, kg, lb), and when measured with a torque wrench, it is designated by torque (N·m, kg·m, in·lb).*

Preload Measurement with Spring Scale

● Hold the bearing housing in a vise so that the gear shaft axis is vertical.

● Hook [C] the spring scale [B] on the driven gear holder [A] at a point 200 mm [D] apart from the center of the gear shaft.

● Apply force to the handle horizontally and at a right angle to it.

Special Tool - Driven Gear Holder: 57001-1027

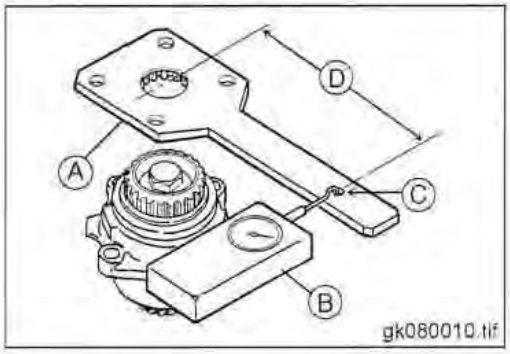

Front Bevel Gears

★ If the preload is out of specified range, replace the bearing collar and/or spacer. To increase preload, decrease the stack length of the collar and spacer. To decrease preload, increase the stack length of the collar and spacer.
★ Change the stack length a little at a time.
● Recheck the bearing preload, and readjust if necessary.

Collars for Preload Adjustment

Length (mm)	Part Number
22.8	92027-1152
22.9	92027-1153
23.0	92027-1154
23.1	92027-1155
23.2	92027-1156
23.3	92027-1157
23.4	92027-1158
23.5	92027-1159
23.6	92027-1160
23.7	92027-1161
23.8	92027-1162
23.9	92027-1163
24.0	92027-1164
24.1	92027-1165

Spacers for Preload Adjustment

Thickness (mm)	Part Number
1.70	92025-1072
1.72	92025-1073
1.74	92025-1074
1.76	92025-1075
1.78	92025-1076
1.80	92025-1077

Bearing Preloading Mechanism

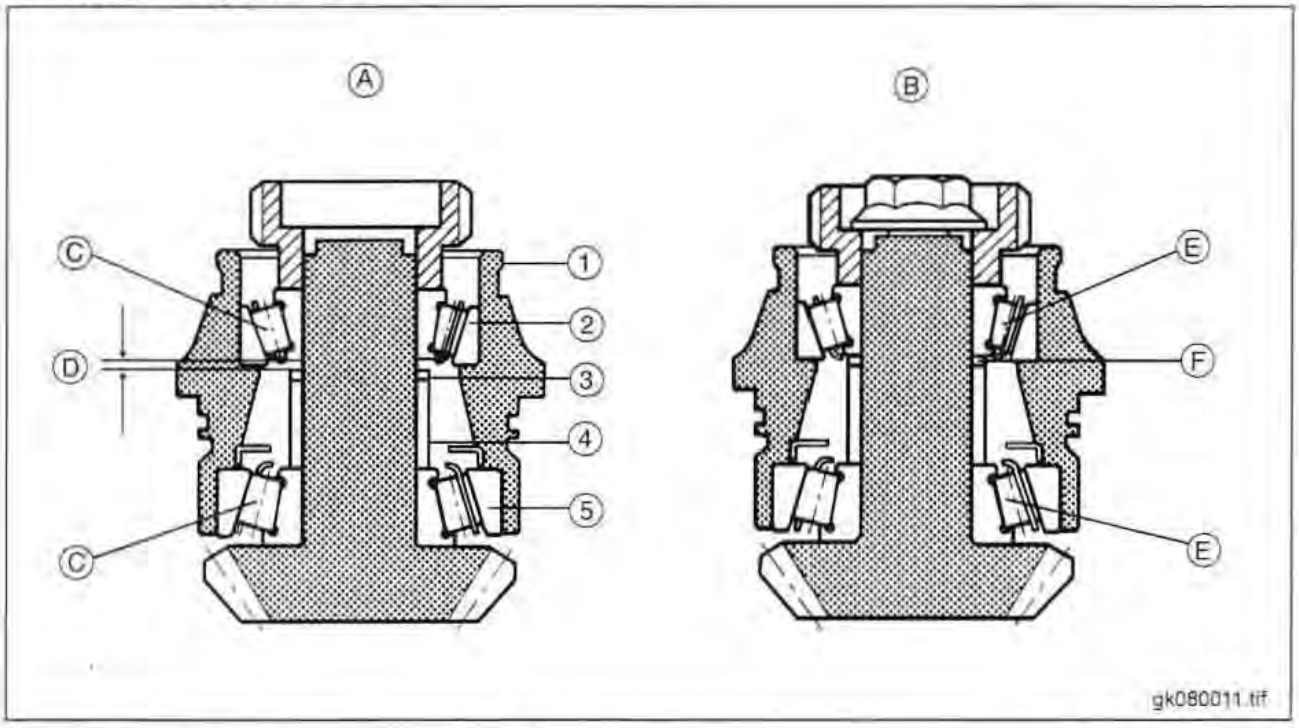

1. Bearing Housing
2. Tapered Roller Bearing
Before Tightening [A]
After Tightening [B]
3. Spacer
4. Collar
Under No Preload [C]
Initial Clearance [D]
5. Tapered Roller Bearing
Under Preload [E]
No Clearance [F]

Front Bevel Gears

Backlash Adjustment

- Clean any dirt and oil off bevel gear teeth with a high-flash point solvent.
- Install the drive gear with the primary shim (1.0 mm thickness), and tighten the nut to the specified torque.

Torque - Drive Gear Nut: 265 N·m (27.0 kg·m, 195 ft·lb)

NOTE

Do not stake the head of the nut until both backlash and tooth contact adjustments are finished.

- Install the driven gear assy in the front gear case with the primary shim (1.0 mm thickness), and tighten the mounting bolts to the specified torque.

Torque - Driven Gear Assy Mounting Bolts: 25 N·m (2.5 kg·m, 18.0 ft·lb)

Check backlash during the tightening of the mounting bolts, and stop tightening them immediately if the backlash disappears. Then, change the shim to a thicker one.

- Install a holder [A] with 6 mm bolts and nuts on the front gear case to mount a dial gage.
- Set up a dial gage against a drive gear tooth to check gear backlash. The gage stem must be in line with the direction of tooth travel.
- To measure the backlash, move the drive gear back and forth [C] while holding [B] the driven gear steady with a tool. The difference between the highest and lowest gage readings is the amount of backlash.

★ If the backlash is not within the limit, replace the gear shim(s) at the drive and/or driven gear. To increase backlash, increase the thickness of the shim(s). To decrease backlash, decrease the thickness of the shim(s).

★ Change the thickness a little at a time.

- Recheck the backlash, and readjust as necessary.

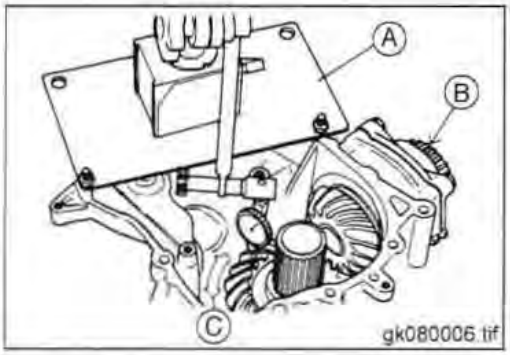

NOTE

It is OK to pack two shims. Do not pack three or more shims.

Front Bevel Gear Backlash (at the gear tooth)
0.10 ~ 0.15 mm

Shims for Drive Gear

Thickness (mm)	Parts Number
0.15	92025-1688
0.5	92025-1689
0.6	92025-1690
0.7	92025-1691
0.8	92025-1692
0.9	92025-1693
1.0	92025-1694
1.1	92025-1695
1.2	92025-1696

Shims for Driven Gear

Thicknrss (mm)	Parts Number
0.1	92025-1826
0.15	92025-1818
0.5	92025-1819
0.6	92025-1820
0.7	92025-1821
0.8	92025-1822
0.9	92025-1823
1.0	92025-1824
1.2	92025-1825

Front Bevel Gears

Tooth Contact Adjustment

- Clean any dirt and oil off the bevel gear teeth with a high-flash point solvent.
- Apply checking compound to 4 or 5 teeth on the driven gear.

NOTE

- *Apply checking compound to the teeth in a thin, even coat with a fairly stiff paint brush. If painted too thickly, the exact tooth pattern may not appear.*
- *The checking compound must be smooth and firm, with the consistency of tooth paste.*
- *Special compounds are available from automotive supply stores for the purpose of checking differential gear tooth patterns and contact. Use this for checking the bevel gears.*

- Turn the driven gear for 3 or 4 revolutions in the drive and reverse (coast) directions, while creating a drag on the drive gear.
- Check the drive pattern and coast pattern of the bevel gear teeth. The tooth contact patterns of both drive and coast sides should be centrally located between the top and bottom of the tooth, and little closer to the toe of the tooth.

★ If the tooth contact pattern is incorrect, replace the shim(s) at the drive gear and shim(s) at the driven gear, following the examples shown. Then erase the tooth contact patterns, and check them again. Also check the backlash every time the shims are replaced. Repeat the shim change procedure as necessary.

NOTE

- *If the backlash goes out of standard range after changing shims, correct the backlash before checking the tooth contact pattern.*
- *It is OK to pack two shims. Do not pack three or more shims.*

Heel [A]
Bottom [B]
Top [C]
Toe [D]
Drive Gear [E]
Driven Gear [F]

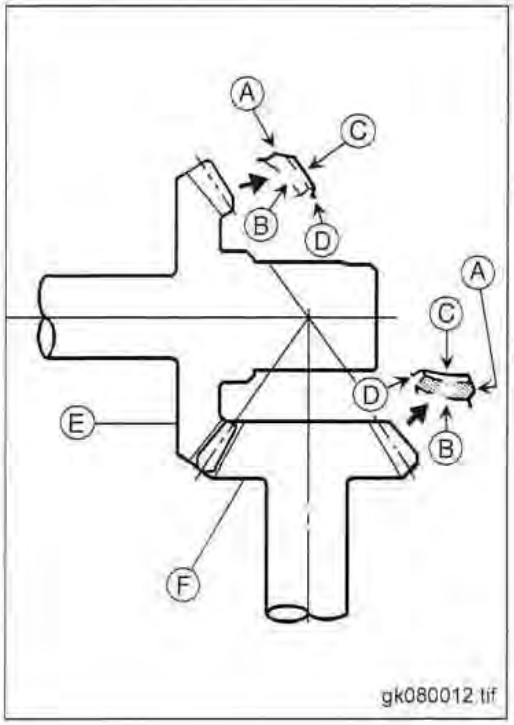

gk080012.tif

Incorrect Tooth Contact Patterns (Example 1):

- Increase the thickness of the drive gear shim(s) by 0.05 mm, and/or increase the thickness of the driven gear shim(s) by 0.05 mm to correct the pattern shown below. Repeat in 0.05 mm steps if necessary.

Heel [A]
Bottom [B]
Top [C]
Toe [D]
Drive Gear [E]
Driven Gear [F]

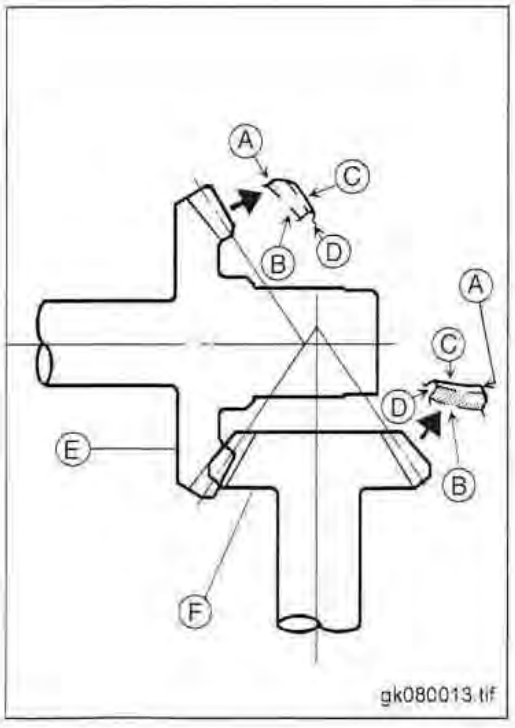

gk080013.tif

Front Bevel Gears

Incorrect Tooth Contact Patterns (Example 2):

- Decrease the thickness of the drive gear shim(s) by 0.05 mm, and/or decrease the thickness of the driven gear shim(s) by 0.05 mm to correct the pattern shown below. Repeat in 0.05 mm steps if necessary.

  Heel [A]
  Bottom [B]
  Top [C]
  Toe [D]
  Drive Gear [E]
  Driven Gear [F]

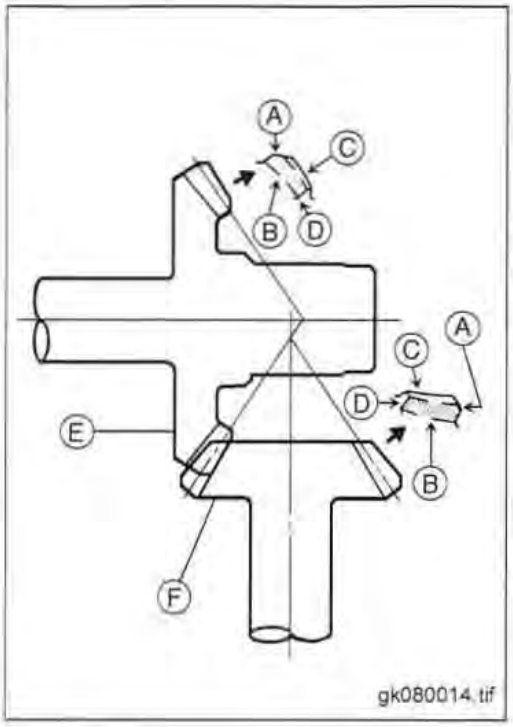

Bevel Gear Inspection

- Visually check the bevel gears for scoring, chipping, or other damage.

★ Replace the bevel gears as a set if either gear is damaged.

Cam Damper Inspection

- Visually inspect the spring [A], cam follower [B], damper cam [C], and output shaft [D].

★ Replace the damaged parts.

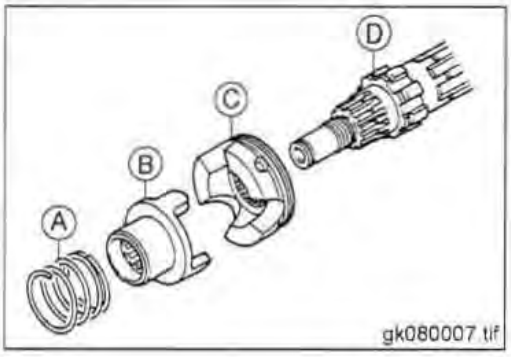

Bearing and Oil Seal

Ball or Needle Bearing Replacement

- Using the bearing driver set or the oil seal & bearing remover, remove the bearings.
- Remove the pinion gear needle bearing [A] in the final gear case as follows.
  - First drill the spring pin [B] using a 3.5 mm drill bit [C], second a 3.8 mm,
    22 mm [D]
  - Using a hook, remove the residue of the spring pin.
  - Remove the pinion gear needle bearing.

Special Tools - Oil Seal & Bearing Remover: 57001-1058
Bearing Driver Set: 57001-1129

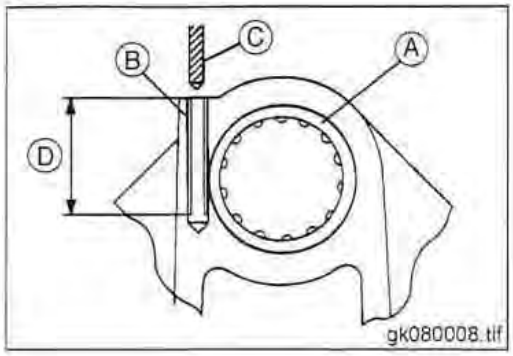

- Install a new needle bearing [A] with the marked side facing out until it bottoms out, using the bearing driver set [B]. This prevents bearing damage.

Special Tool - Bearing Driver Set: 57001-1129

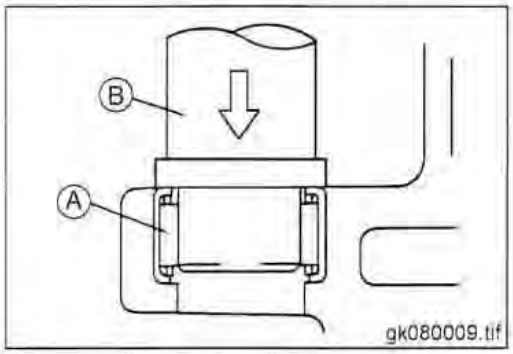

- Insert a new spring pin.

NOTE

In the absence of the above mentioned tools, satisfactory results may be obtained by heating the case to approximately 93°C (200°F) max., and tapping the bearing in or out.

CAUTION

Do not heat the case with a blowtorch. This will warp the case. Soak the case in oil and heat the oil.

- Using a press and the bearing driver set [A], install a new ball bearing until it stops at the bottom of the case.

Special Tool - Bearing Driver Set: 57001-1129

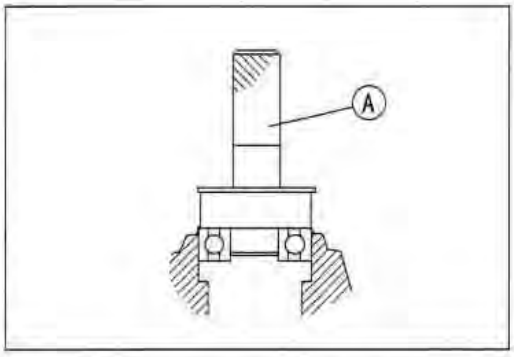

Ball Bearing Wear

CAUTION

Do not remove the bearings for inspection. Removal may damage them.

- Check the ball bearings.
  - Since the ball bearings are made to extremely close tolerances, the wear must be judged by feel rather than measurement. Clean each bearing in a high-flash point solvent, dry it (do not spin the bearing while it is dry), and oil it with engine oil.
  - Spin [A] the bearing by hand to check its condition.

★ If the bearing is noisy, does not spin smoothly, or has any rough spots, replace it.

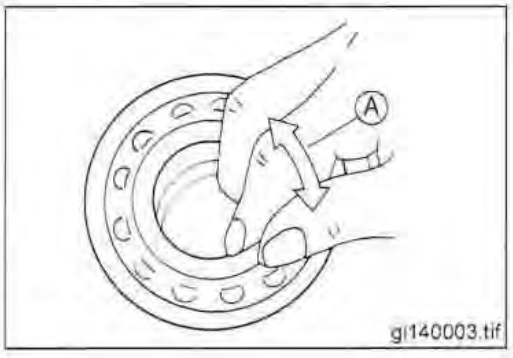

Tapered Roller Bearing Inspection

- Visually inspect the bearing in the front gear case for abrasion, color change, or other damage.

★ If there is any doubt as to the condition of the bearing, replace it.

Bearing and Oil Seal

Needle Bearing Inspection

● Check the needle bearings in the front and final gear cases.

○ The rollers in the needle bearing normally wear very little, and wear is difficult to measure. Instead of measuring, inspect the bearing for abrasion, color change, or other damage.

★ If there is any doubt as to the condition of a needle bearing, replace it.

Oil Seal Inspection

● Inspect the oil seals.

★ Replace it if the lips are misshapen, discolored (indicating that the rubber has deteriorated), hardened or otherwise damaged.

Brakes

Table of Contents

Exploded View....11-2
Exploded View (G3 Model)....11-5
Specifications....11-6
Brake Lever, Brake Pedal....11-7
Brake Lever Position Adjustment....11-7
Brake Pedal Position Adjustment....11-7
Brake Pedal Removal....11-8
Brake Pedal Installation....11-9
Calipers....11-10
Front Caliper Removal....11-10
Rear Caliper Removal....11-10
Caliper Installation....11-10
Caliper Disassembly....11-11
Caliper Assembly....11-11
Caliper Fluid Seal Damage....11-12
Caliper Dust Seal/Friction Boot Damage....11-13
Caliper Piston and Cylinder Damage....11-13
Caliper Holder Shaft Wear....11-13
Brake Pads....11-14
Front Brake Pad Removal....11-14
Rear Brake Pad Removal....11-14
Installation....11-14
Brake Pad Wear Inspection....11-15
Master Cylinder....11-16
Front Master Cylinder Removal....11-16
Front Master Cylinder Installation....11-16
Rear Master Cylinder Removal/Installation....11-17
Front Master Cylinder Disassembly....11-17
Rear Master Cylinder Disassembly....11-17
Master Cylinder Assembly....11-18
Master Cylinder Inspection....11-18
Brake Discs....11-20
Brake Disc Removal....11-20
Brake Disc Installation....11-20
Brake Disc Wear....11-20
Brake Disc Warp....11-20
Brake Fluid....11-21
Level Inspection....11-21
Brake Fluid Recommendation....11-21
Brake Fluid Change....11-21
Bleeding the Brake Line....11-22
Brake Hoses....11-25
Brake Hose Removal/Installation....11-25
Brake Hose Inspection....11-25

Exploded View

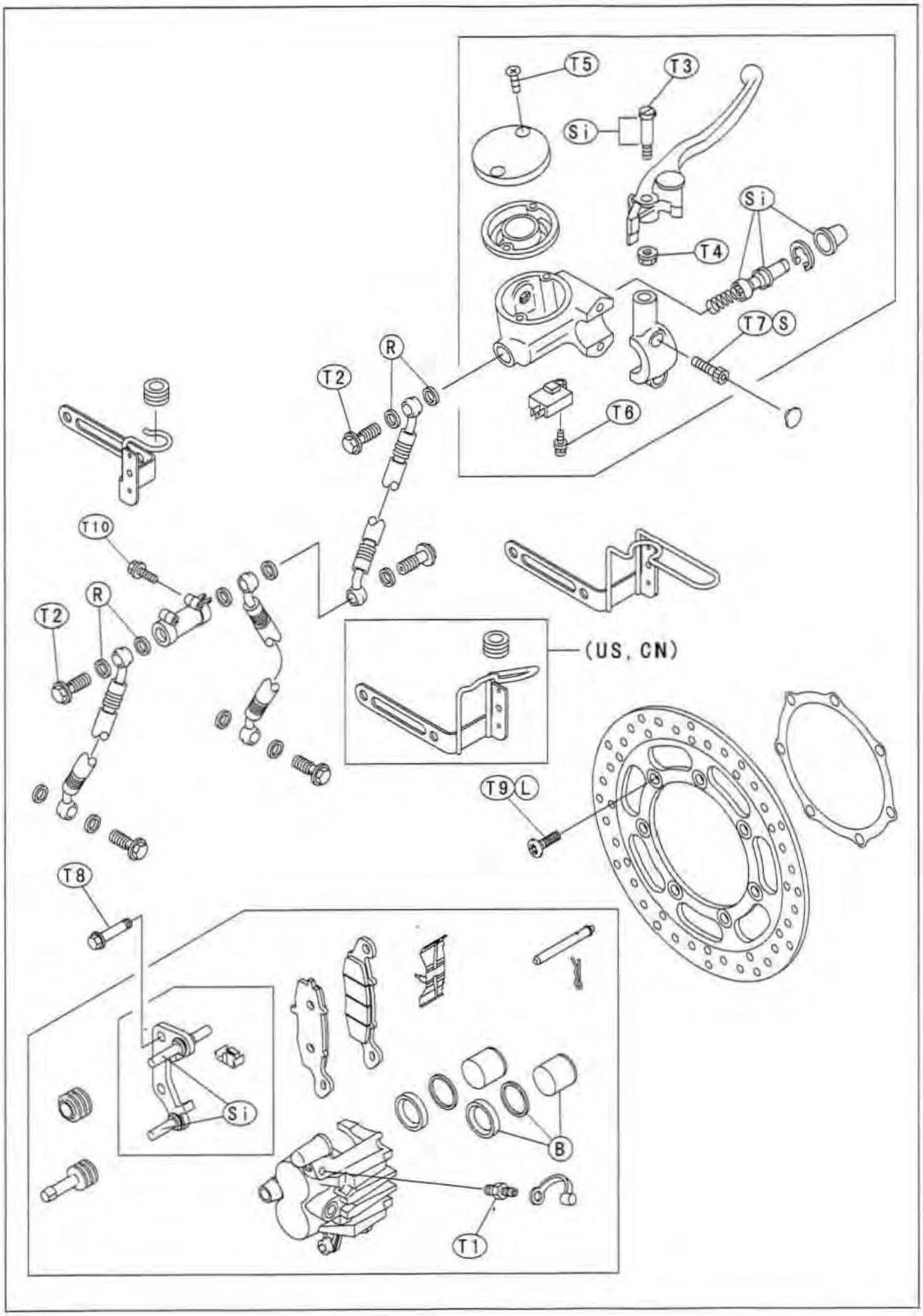

Exploded View

B: Apply brake fluid.
G: Apply grease.
L: Apply a non-permanent locking agent.
R: Replacement Parts
S: Follow the specific tightening sequence.
Si: Apply silicone grease or PBC grease.
T1: 7.8 N·m (0.80 kg·m, 69 in·lb)
T2: 25 N·m (2.5 kg·m, 18.0 ft·lb)
T3: 1.0 N·m (0.10 kg·m, 9 in·lb)
T4: 5.9 N·m (0.60 kg·m, 52 in·lb)
T5: 1.5 N·m (0.15 kg·m, 13 in·lb)
T6: 1.2 N·m (0.12 kg·m, 10 in·lb)
T7: 9.8 N·m (1.0 kg·m, 87 in·lb)
T8: 34 N·m (3.5 kg·m, 25 ft·lb)
T9: 27 N·m (2.8 kg·m, 20.0 ft·lb)
T10: 7.4 N·m (0.75 kg·m, 65 in·lb)

Exploded View

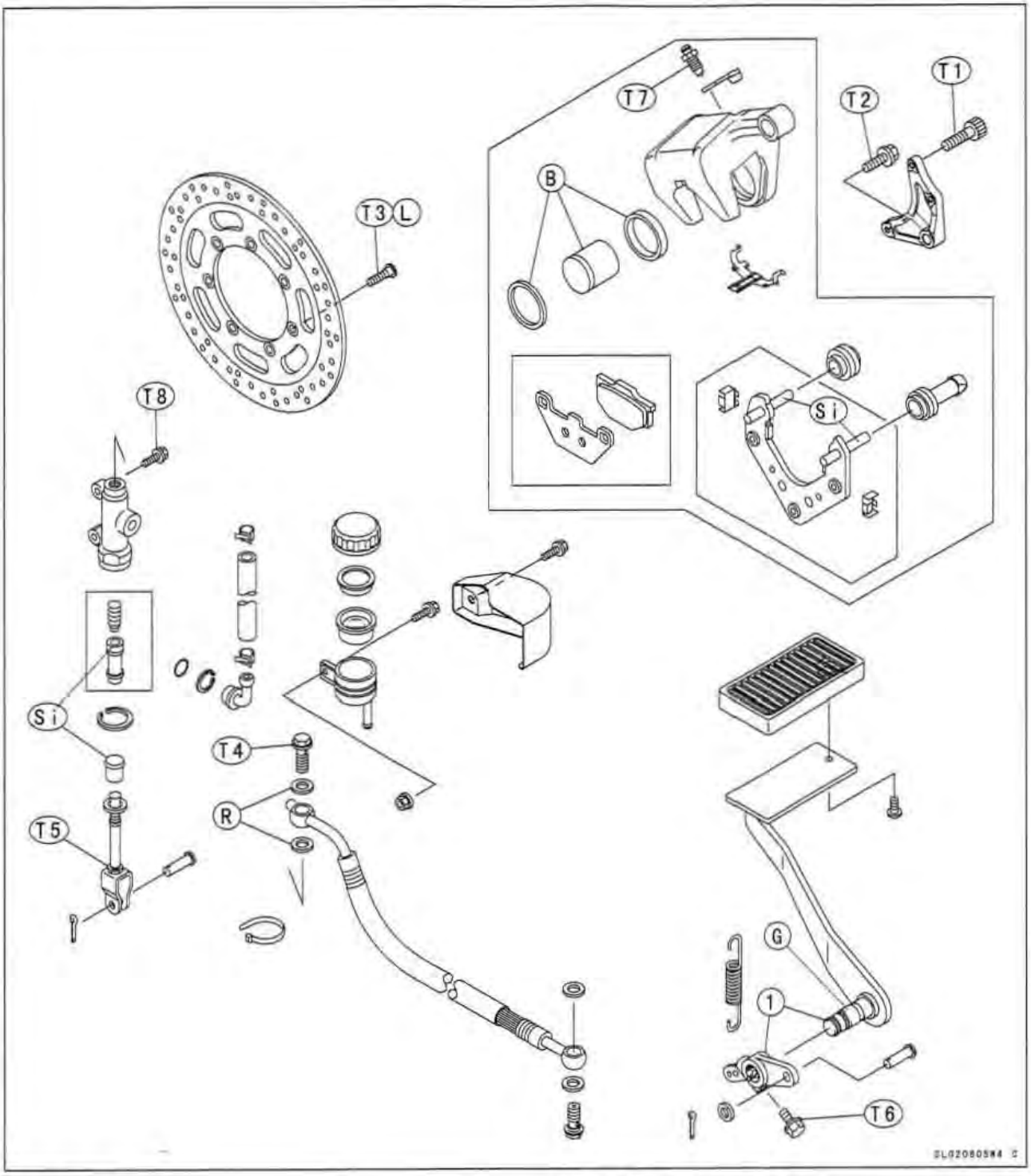

1. Align the marks.
B: Apply brake fluid.
G: Apply grease.
L: Apply a non-permanent locking agent.
R: Replacement Parts
Si: Apply silicone grease or PBC grease.

T1: 32 N·m (3.3 kg·m, 24 ft·lb)
G2/H2 Model: 34 N·m (3.5 kg·m, 24 ft·lb)
T2: 64 N·m (6.5 kg·m, 47 ft·lb)
T3: 27 N·m (2.8 kg·m, 20.0 ft·lb)
T4: 25 N·m (2.5 kg·m, 18.0 ft·lb)
T5: 18 N·m (1.8 kg·m, 13.0 ft·lb)
T6: 23 N·m (2.3 kg·m, 16.5 ft·lb)
T7: 7.8 N·m (0.80 kg·m, 69 in·lb)
T8: 25 N·m (2.5 kg·m, 18 in·lb)
G2/H2 Model: 23 N·m (2.3 kg·m, 16.5 in·lb)

Exploded View (G3 Model)

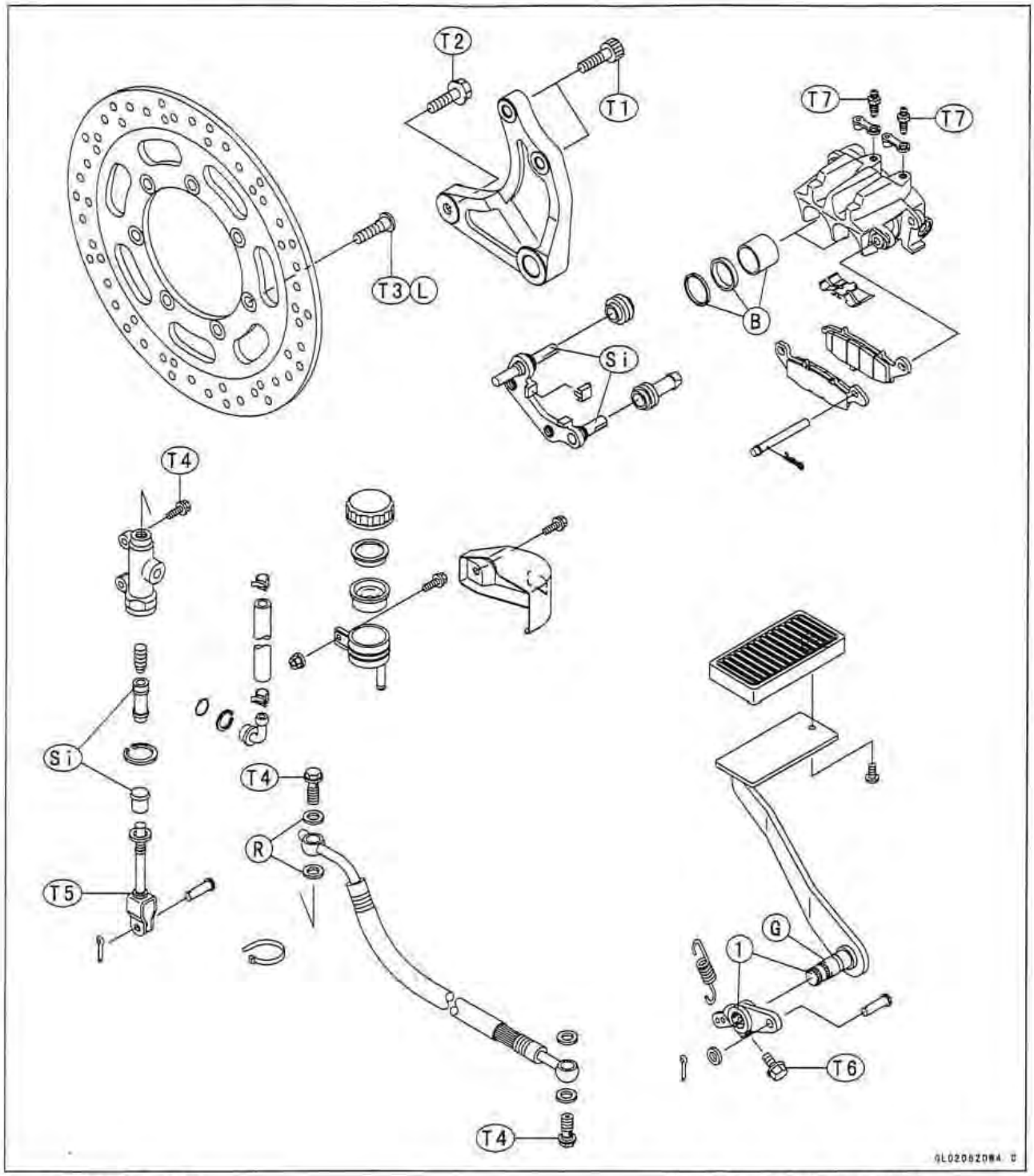

1. Align the marks.
B: Apply brake fluid.
G: Apply grease.
L: Apply a non-permanent locking agent.
R: Replacement Parts.
Si: Apply silicone grease or PBCc grease.
T1: 32 N·m (3.3 kg·m, 24 ft·lb)
T2: 64 N·m (6.5 kg·m, 47 ft·lb)
T3: 27 N·m (2.8 kg·m, 20.0 ft·lb)
T4: 25 N·m (2.5 kg·m, 18.0 ft·lb)
T5: 18 N·m (1.8 kg·m, 13.0 ft·lb)
T6: 23 N·m (2.3 kg·m, 16.5 ft·lb)
T7: 7.8 N·m (0.80 kg·m, 69 in·lb)

Specifications

Item		Standard	Service Limit
Brake Lever, Brake Pedal:			
Brake lever position		No.1	5-way adjustable
Brake lever free play		Non-adjustable	– – –
Pedal free play		Non-adjustable	– – –
Pedal position		About 95 mm (height from pedal tip to footpeg top)	– – –
Brake Fluid:			
Grade		D.O.T.4	– – –
Brake Pads:			
Pad lining thickness:	Front	4.5 or 4.7 mm	1 mm
	Rear	4.85 mm	1 mm
		7.5 mm (G3 Model)	1 mm
Brake Discs:			
Thickness:	Front	5.8 ~ 6.2 mm	5.5 mm
	Rear	6.8 ~ 7.2 mm	6.0 mm
Runout		TIR 0.2 mm or less	TIR 0.3 mm

Special Tools - Inside Circlip Pliers: 57001-143
Jack: 57001-1238
Attachment Jack: 57001-1398

Brake Lever, Brake Pedal

Brake Lever Position Adjustment

The brake lever adjuster has 5 positions so that the brake lever position can be adjusted to suit the operator's hand.

- Push the lever forward and turn the adjuster [A] to align the number with the arrow mark [B] on the lever holder.

○ The distance from the grip to the lever is minimum at number 5 and maximum at number 1.

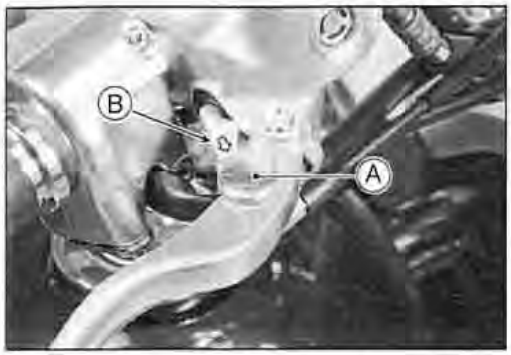

Brake Pedal Position Adjustment

- Check that the brake pedal [A] is in the correct position.

Pedal Position
Standard: **About 95 mm[B]**
(height from padal tip to footpeg top [C])

NOTE

○ *Usually it's not necessary to adjust the pedal position, but always adjust it when push rod locknut has been loosened.*

○ *If the push rod length cannot be adjusted by turning the clevis, the brake pedal may be deformed or incorrectly installed.*

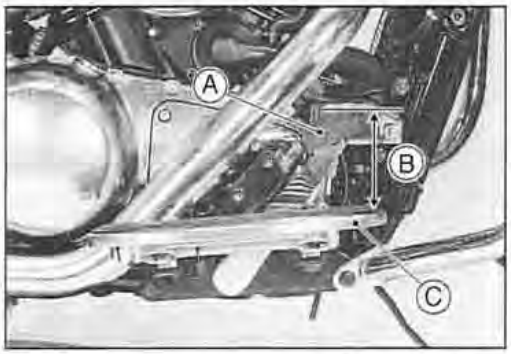

- Remove the fuel tank (see Fuel System chapter) and pull off the rear brake light switch connector [A].
- Cut the straps [B] to free the rear brake light switch leads.

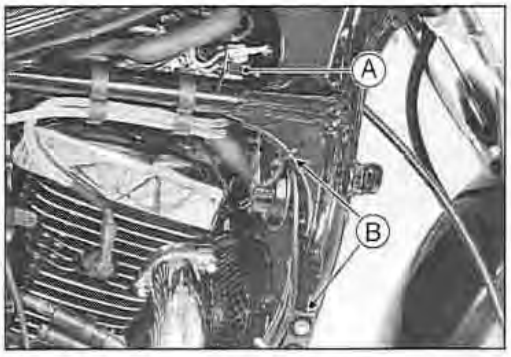

- Remove the front guard (see Frame chapter).
- Remove the brake fluid reservoir cover and take off the brake fluid reservoir [A].

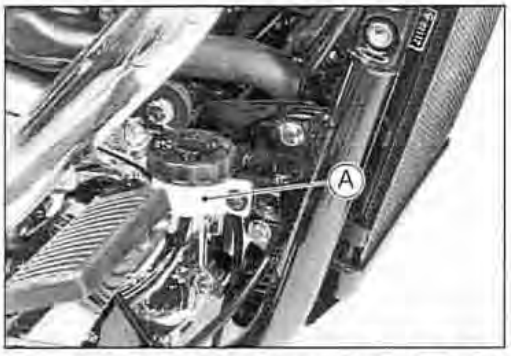

- Remove the front guard (see Frame chapter).
- Remove the right front footpeg bolts [A] and turn over the footpeg [B].

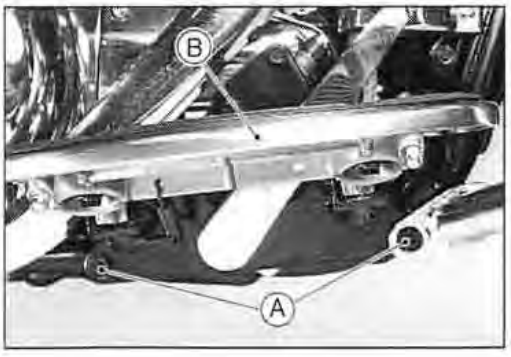

Brake Lever, Brake Pedal

- Loosen the locknut [A] and turn the push rod with the hex head [B] to achieve the correct pedal position.

★ If the length [C] shown is **8 ± 1 mm**, the pedal position will be within the standard range.

- Tighten:

Torque - Push Rod Locknut: 18 N·m (1.8 kg·m, 13.0 ft·lb)

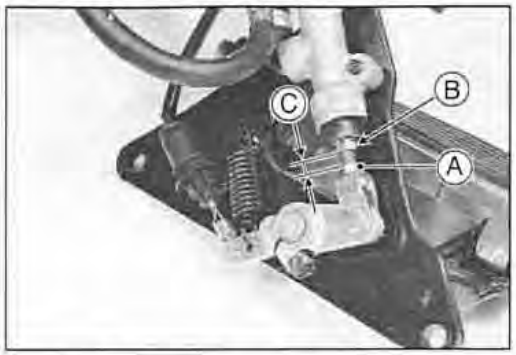

Brake Pedal Removal

- Loosen the brake pedal clamp bolt [A].
- Loosen the rear master cylinder mounting bolts.
- Remove the right front footpeg bolts, and turn over the footpeg (see Brake Pedal Position Adjustment).



- Remove:
  Brake Pedal Return Spring [A]
  Brake Switch Return Spring [B]
- Unscrew the brake pedal clamp bolt [C].

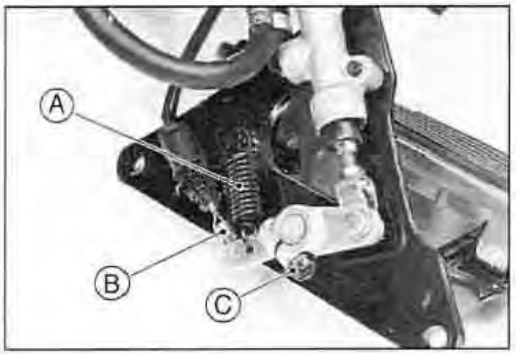

- Remove the cotter pin [A], and the joint pin [B].
- Unscrew the bolts [C], and remove the rear master cylinder [D].

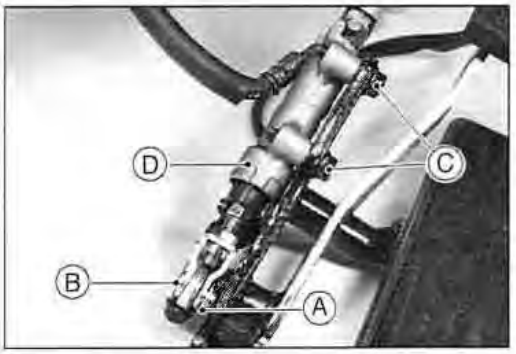

- Detach the front footpeg [A], and pull off the brake pedal [B].

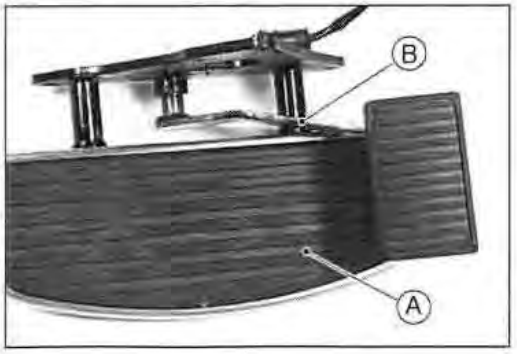

Brake Lever, Brake Pedal

Brake Pedal Installation

- Apply grease to the brake pedal shaft.
- Install the pedal shaft [A] so that the punched mark on the shaft is aligned [B] with the punched mark on the brake lever [C].

NOTE

○ *Install the brake lever so that the discriminating mark [A] face to outside (G3 Model).*

○ *Be sure to bend the end of cotter Pin after in stalling it to the joint pin.*

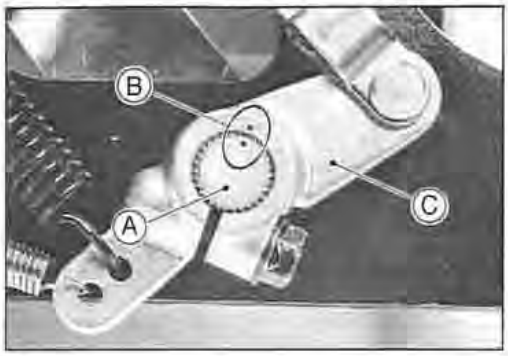

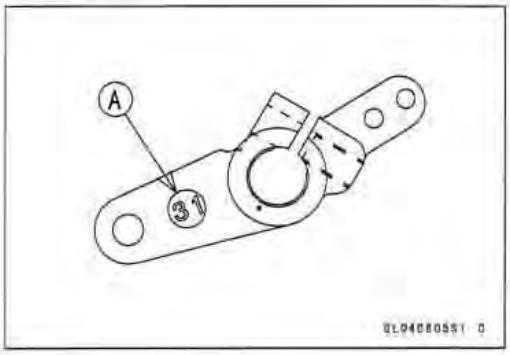

- Install:
  Brake Pedal Return Spring
  Brake Switch Return Spring
- Tighten:

Torque - Front Footpeg Bolts: 34 N·m (3.5 kg·m, 25 ft·lb)
Brake Pedal Clamp Bolt: 23 N·m (2.3 kg·m, 16.5 ft·lb)
Rear Master Cylinder Mounting Bolts: 25 N·m (2.5 kg·m, 18.0 ft·lb)
G2/H2 Model: 23 N·m (2.3 kg·m, 16.5 ft·lb)

- Replenish the fluid in the reservoir, and bleed the brake line (see Bleeding the Brake Line).
- Check the brake for proper braking power, no brake drag, and no fluid leakage.

⚠ WARNING

Do not attempt to ride the motorcycle until a full brake pedal is obtained by pumping the brake pedal until the pads are against the disc. The brake will not function on the first application of the pedal if this is not done.

- Check the brake pedal position and adjust it if necessary.
- Check the rear brake light switch operation and adjust the switch if necessary (see Electrical System chapter).

Calipers

Front Caliper Removal

- Loosen the banjo bolt [A] at the brake hose lower end, and tighten it loosely.
- Unscrew the caliper mounting bolts [B].

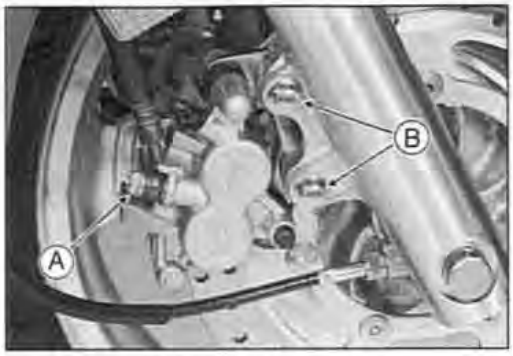

- Twist [A] the caliper outboard to clear the disc, and then take off the caliper.
- Unscrew the banjo bolt [B] and remove the brake hose [C] from the caliper.

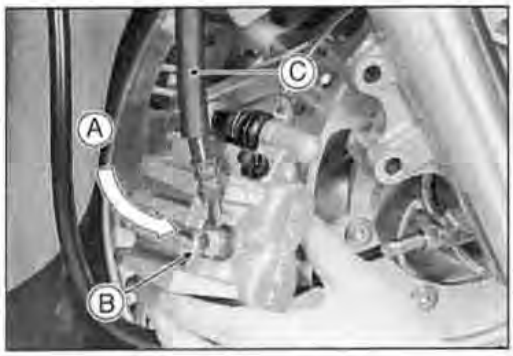

CAUTION

Immediately wash away any brake fluid that spills.

NOTE

If the caliper is to be disassembled after removal and if compressed air is not available, remove the pistons before the brake hose is removed (see Caliper Disassembly).

Rear Caliper Removal

- Remove the right saddlebag (see Frame chapter).
- Remove the rear caliper [A] in the same way as the front caliper.
  Caliper Mounting Bolts [B]
  Brake Hose [C]

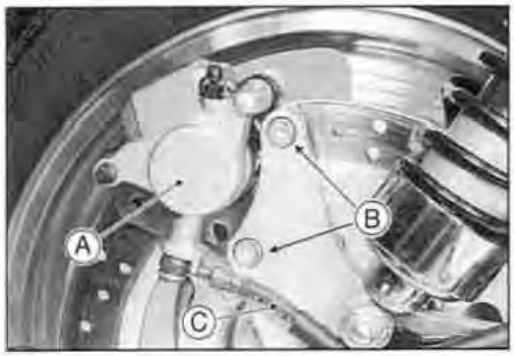

Caliper Installation

- Install the caliper and brake hose lower end.
- Replace the washer on each side of hose fitting with new ones.
- Tighten the caliper mounting bolts and banjo bolt.

Torque - **Front Caliper Mounting Bolts: 34 N·m (3.5 kg·m, 25 ft·lb)**
Rear Caliper Mounting Bolts: 32 N·m (3.3 kg·m, 24 ft·lb)
G2/H2 Model: 34 N·m (3.5 kg·m, 25 ft·lb)
Brake Hose Banjo Bolt: 25 N·m (2.5 kg·m, 18.0 ft·lb)

- Check the fluid level in the brake reservoirs.
- Bleed the brake line (see Bleeding the Brake Line).
- Check the brake for good braking power, no brake drag, and no fluid leakage.

⚠ WARNING

Do not attempt to ride the motorcycle until a full brake lever or pedal is obtained by pumping the brake lever or pedal until the pads are against the disc. The brakes will not function on the first application of the lever or pedal if this is not done.

Calipers

Caliper Disassembly

NOTE

○ *The procedure to disassemble the front caliper is as follows. The rear caliper disassembly is the same as for the front caliper.*

- Remove the caliper (see Caliper Removal) with the hose installed.
- Remove the pads and spring (see Pad Removal).
- Insert a wooden board [A] 6 mm thick inside the caliper opening.
- Pump the brake lever (or pedal) until the piston(s) [B] push the wooden board.

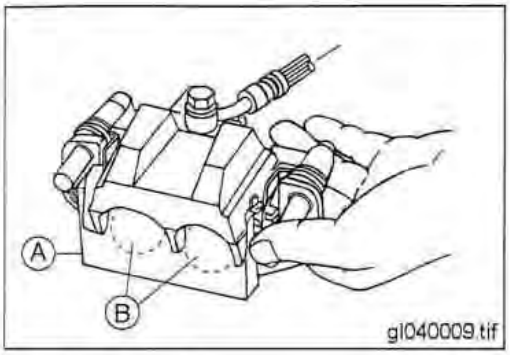

- Remove the board and pull out the piston(s) [A] by hand.

○ These piston(s) can also be removed by disconnecting the hose and applying compressed air to the hose joint opening using the same wooden board. But be carefull not to put your fingers or palm inside the caliper opening during work.

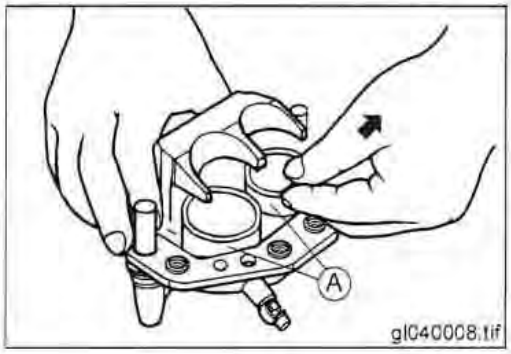

⚠ WARNING

To avoid serious injury, never place your fingers or palm inside the caliper opening. If you apply compressed air into the caliper, the piston(s) may crush your hand or fingers.

CAUTION

Immediately wash away any brake fluid that spills.

- Remove the dust seal(s) [A] and fluid seal(s) [B].
- Remove the caliper holder [C], and shaft rubber friction boots [D].
- Remove the bleed valve and rubber cap.

Front Caliper [E]

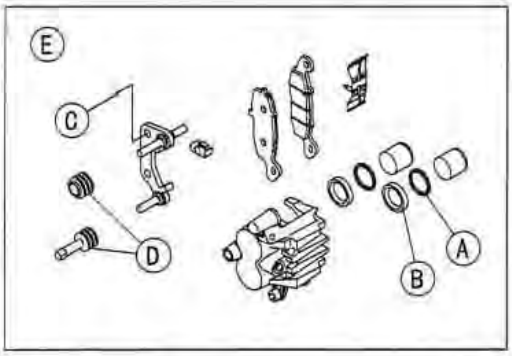

Caliper Assembly

- Tighten the bleed valve.

Torque - Caliper Bleed Valve: 7.8 N·m (0.80 kg·m, 69 in·lb)

○ It is recommended that the fluid seal (piston seal) which is removed, be replaced with a new one.

- Replace the dust seals if they are damaged.
- Install the fluid seal. Either side of the seal may face outboard.
- Apply brake fluid to the cylinders, pistons, and fluid seals (piston seals), and push the pistons into the cylinders by hand. Take care that neither the cylinder nor the piston skirt gets scratched.

Front Caliper [K]

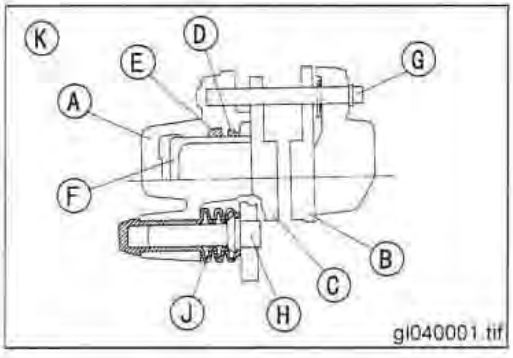

Calipers

Caliper [A]
Outer Pad [B]
Inner Pad [C]
Dust Seal [D]
Fluid Seal [E]
Piston [F]
Pad Pin [G]
Caliper Holder Shafts [H]
Friction Boot [J]
Rear Caliper [L]

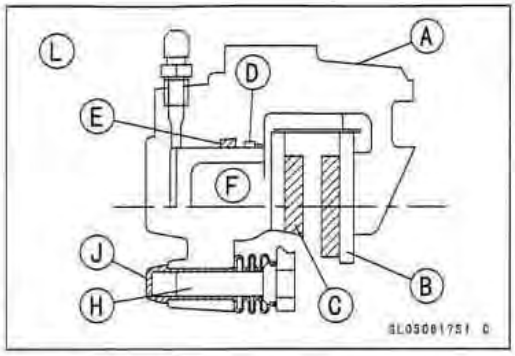

- Replace the caliper holder shaft rubber friction boot and dust cover if they are damaged.
- Apply a thin coat of silicone grease to the caliper holder shafts and holder holes (Silicone grease is a special high temperature, water-resistance grease).
- Install the anti-rattle spring in the caliper as shown.
- Install the pads (see Brake Pad Installation).

Anti-rattle Spring for Front Caliper [A]



Anti-rattle Spring for Rear Caliper [A]
G3 Model [J]

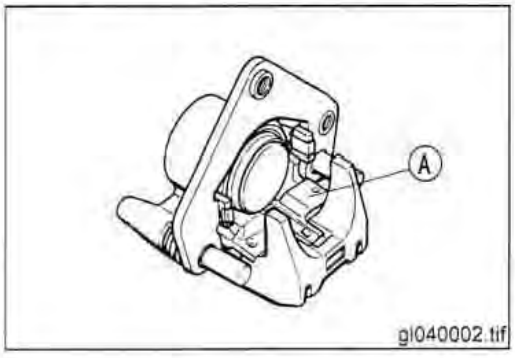

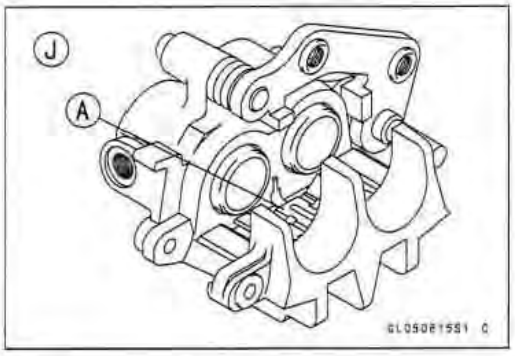

Caliper Fluid Seal Damage

The fluid seals [A] around the piston maintain the proper pad/disc clearance. If the seals are not satisfactory, pad wear will increase, and constant pad drag on the disc will raise brake and brake fluid temperature.

- Replace the fluid seals under any of the following conditions: (a) fluid leakage around the pad; (b) brakes overheat (c) there is a large difference in inner and outer pad wear; (d) the seal is stuck to the piston.

★ If the fluid seal is replaced, replace the dust seal as well. Also, replace all seals every other time the pads are changed.

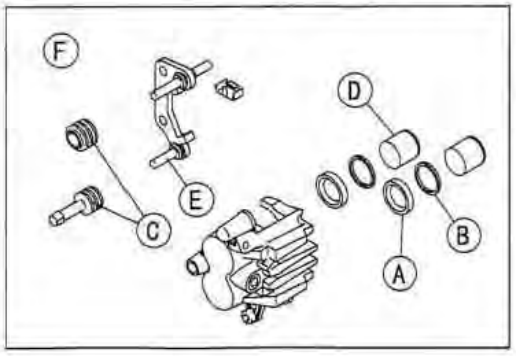

Calipers

Caliper Dust Seal/Friction Boot Damage

- Check that the dust seals [B] and friction boot [C] are not cracked, worn, swollen, or otherwise damaged.
- If they show any damage, remove the caliper bracket and replace them.

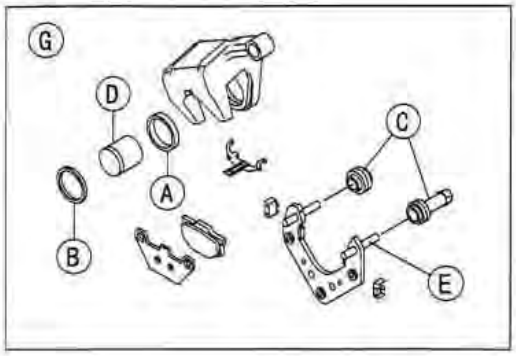

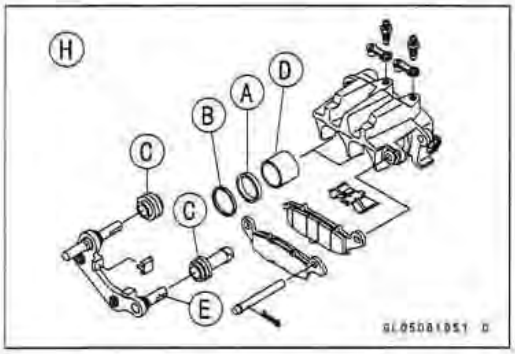

Caliper Piston and Cylinder Damage

- Visually inspect the piston [D] and cylinder surfaces.

★ Replace the caliper if the cylinder and piston are badly scores or rusty.
Front Caliper [F]
Rear Caliper [G]
Rear Caliper - G3 Model [H]

Caliper Holder Shaft Wear

The caliper body must slide smoothly on the caliper holder shafts [E]. If the body does not slide smoothly, one pad will wear more than the other, pad wear will increase, and constant drag on the disc will raise brake and brake fluid temperature.

- Check to see that the caliper holder shafts are not badly worn or stepped, and that the rubber friction boots are not damaged.

★ If the rubber friction boot is damaged, replace the rubber friction boot. To replace the friction boot, remove the pads and the caliper bracket.

★ If the caliper holder shaft is damage, replace the caliper bracket.

Brake Pads

Front Brake Pad Removal

- Remove the caliper with the hose installed.
- Remove:
  Clip [A]
  Pad Pin [B]

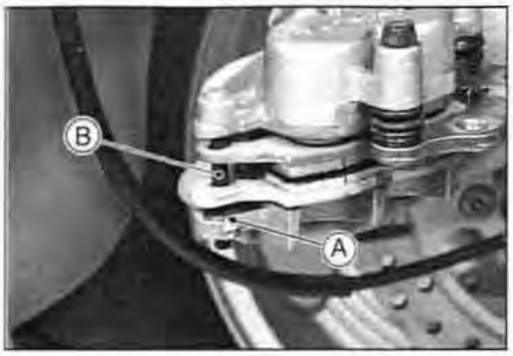

- Remove the outer pad [A], and then remove the piston side pad [B].

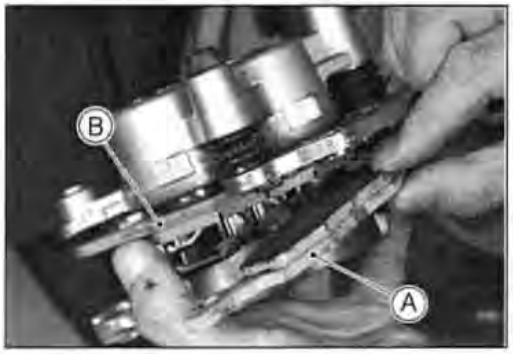

Rear Brake Pad Removal

- Remove the caliper with the hose installed.
- Take off the piston side pad from the caliper holder.
- Push [A] the caliper holder [B] to the piston side, and then remove the pad [C] from the caliper holder shaft [D].

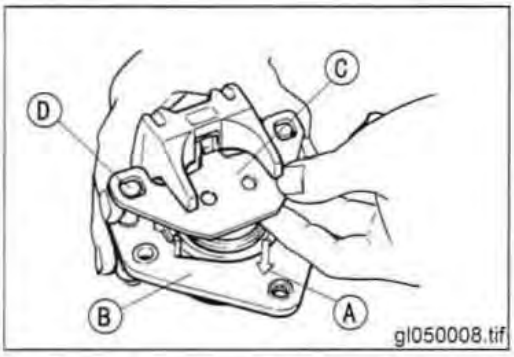

Installation

- Before installation, clean the pads with a high-flash point solvent.
- Push the caliper piston(s) in by hand as far as they will go.
- For the front caliper, the inboard pad [A] next to the pistons has a noise protecting shim [B]. Be careful not to mix it up with the outboard pad.
- Be sure to install the pad pin clip for the front caliper.

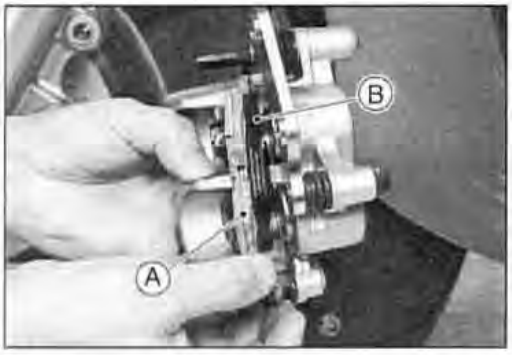

⚠ WARNING

Do not attempt to ride the motorcycle until a full brake lever or pedal is obtained by pumping the brake lever or pedal until the pads are against the disc. The brakes will not function on the first application of the lever or pedal if this is not done.

Brake Pads

Brake Pad Wear Inspection

In accordance with the Periodic Maintenance Chart, inspect the brake pads for wear.

- Remove the front pad [A] and the rear pad [B] ([E]-G3 Model).
- Check the lining thickness [C] of the pads in each caliper.

★ If the lining thickness of either pad is less than the service limit [D], replace both pads in the caliper as a set.

Pad Lining Thickness

Standard:

Front: 4.5 or 4.7 mm

Rear: 4.85 mm

7.5 mm (G3 Model)

Service Limit: 1 mm

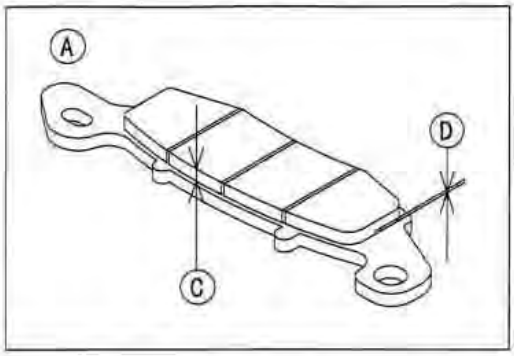

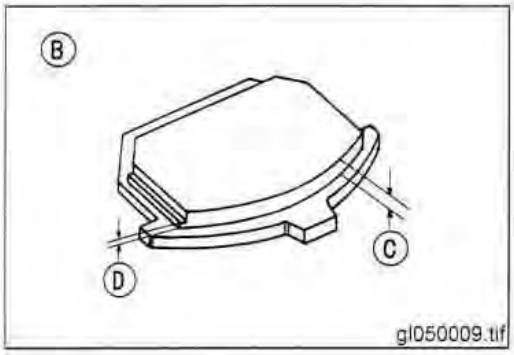

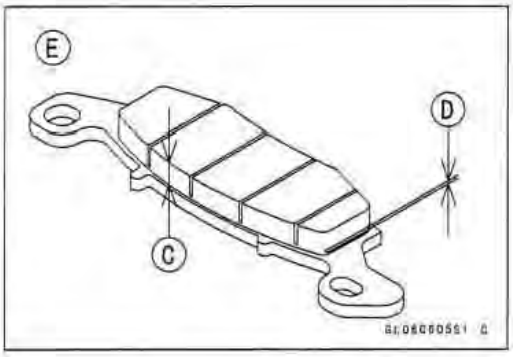

Master Cylinder

Front Master Cylinder Removal

- Disconnect the front brake light switch connectors [A].
- Draw out the brake fluid from the reservoir with a means like the fork oil level gage.



- Remove the banjo bolt [A] to disconnect the brake hose from the master cylinder (see Brake Hose Removal/Installation).
- Unscrew the clamp bolts [B], and take off the master cylinder [C] as an assembly with the reservoir, brake lever, and brake switch installed.

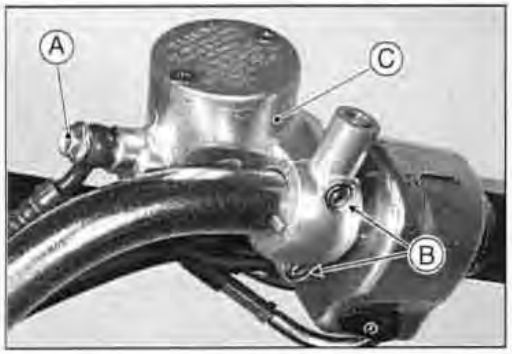

CAUTION
Immediately wash away any brake fluid that spills.

Front Master Cylinder Installation

- Set the front master cylinder [A] to match its mating face [B] to the punched mark [C] of the handlebar.
  Front [D]

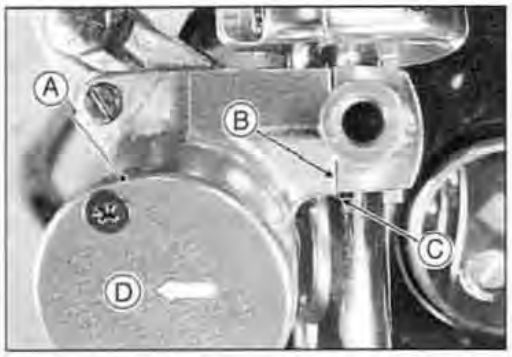

- The master cylinder clamp must be installed with the rear view mirror boss [A] faced upward.
- Tighten the upper clamp bolt first, and then the lower clamp bolt. There will be a gap at the lower part of the clamp after tightening.

Torque - Front Master Cylinder Clamp Bolts: 9.8 N·m (1.0 kg·m, 87 in·lb)



- Use a new flat washer on each side of the brake hose fitting.
- Tighten the brake hose banjo bolt.

Torque - Brake Hose Banjo Bolt: 25 N·m (2.5 kg·m, 18.0 ft·lb)

- Replenish the fluid in the reservoir, and bleed the brake line (see Bleeding the Brake Line).
- Check the brake for good braking power, no brake drag, and no fluid leakage.

Master Cylinder

Rear Master Cylinder Removal/Installation

The rear master cylinder is removed or installed during brake pedal removal or installation (see Brake Pedal Removal or Brake Pedal Installation).

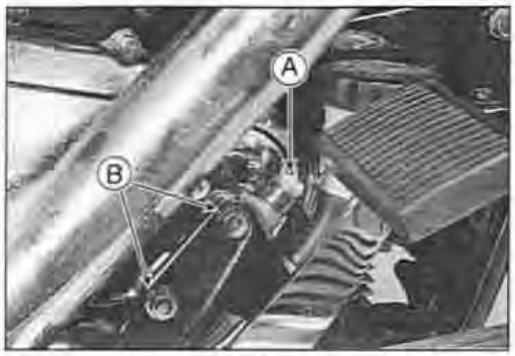

NOTE

Before removing the right front footpeg, loosen the rear master cylinder banjo bolt [A] and mounting bolts [B].

⚠ WARNING

Do not attempt to ride the motorcycle until a full brake pedal is obtained by pumping the brake pedal until the pads are against the disc. The brake will not function on the first application of the pedal if this is not done.

Front Master Cylinder Disassembly

- Remove the front master cylinder.
- Remove the reservoir cap and diaphragm.
- Unscrew the locknut and pivot bolt, and remove the brake lever.
- Pull the dust cover [A] out of place, and remove the circlip [B].

Special Tool - Inside Circlip Pliers: 57001-143

- Pull out the piston assy [C], primary cup [D], and return spring [E].

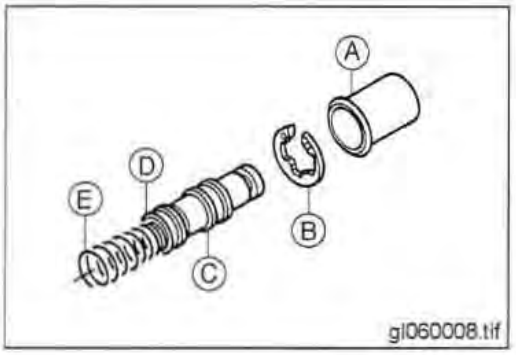

CAUTION

Do not remove the secondary cup from the piston since removal will damage it.

Rear Master Cylinder Disassembly

NOTE

Do not remove the push rod clevis [A] for master cylinder disassembly since removal requires brake pedal position adjustment.

- Remove the rear master cylinder.
- Slide the dust cover on the push rod out of place, and remove the circlip.

Special Tool - Inside Circlip Pliers: 57001-143

- Pull out the push rod with the piston stop.
- Take off the piston assy [B], primary cup [C], and return spring [D].

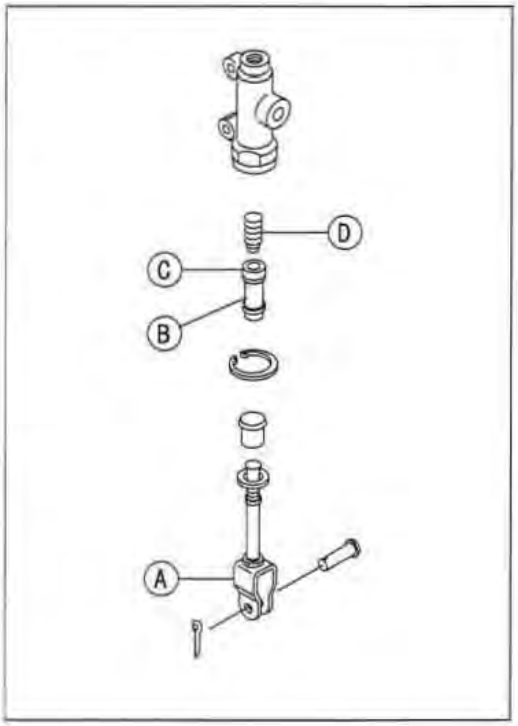

CAUTION

Do not remove the secondary cup from the piston since removal will damage it.

Master Cylinder

Master Cylinder Assembly

- Before assembly, clean all parts including the master cylinder with brake fluid or alcohol.

CAUTION

Except for the disc pads and disc, use only disc brake fluid, isopropyl alcohol, or ethyl alcohol for cleaning brake parts. Do not use any other fluid for cleaning these parts. Gasoline, engine oil, or any other petroleum distillate will cause deterioration of the rubber parts. Oil spilled on any part will be difficult to wash off completely, and will eventually deteriorate the rubber used in the disc brake.

- Apply brake fluid to the removed parts and to the inner wall of the cylinder.
- Take care not to scratch the piston or the inner wall of the cylinder.
- Tighten the brake lever pivot bolt and the locknut.

Silicone Grease - Brake Lever Pivot Bolt
Brake Lever Pivot Contact
Push Rod Contact (Rear)
Dust Cover

Torque - Brake Lever Pivot Bolt: 1.0 N·m (0.10 kg·m, 9 in·lb)
Brake Lever Pivot Bolt Locknut: 5.9 N·m (0.60 kg·m, 52 in·lb)

Master Cylinder Inspection

- Disassemble the front and rear master cylinders.
- Check that there are no scratches, rust or pitting on the inner wall [A] of each master cylinder and on the outside of each piston [B].
- ★ If a master cylinder or piston shows any damage, replace them.
- Inspect the primary cup [C] and secondary cup [D].
- ★ If a cup is worn, damaged softened (rotted), or swollen, the piston assy should be replaced to renew the cups.
- ★ If fluid leakage is noted at the brake lever, the piston assy should be replaced to renew the cups.

Front Master Cylinder [J]

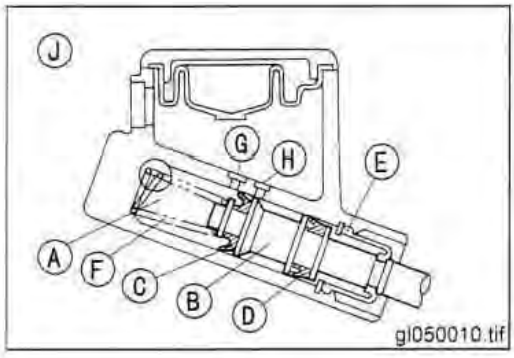

Master Cylinder

- Check the dust covers [E] for damage.
- ★ If they are damaged, replace them.
- Check the piston return spring [F] for any damage.
- ★ If the springs are damaged, replace them.
- Check that relief port [G] and supply port [H] are not plugged.
- ★ If the relief port becomes plugged, the brake pads will drag on the disc. Blow the ports clean with compressed air.

Rear Master Cylinder [K]

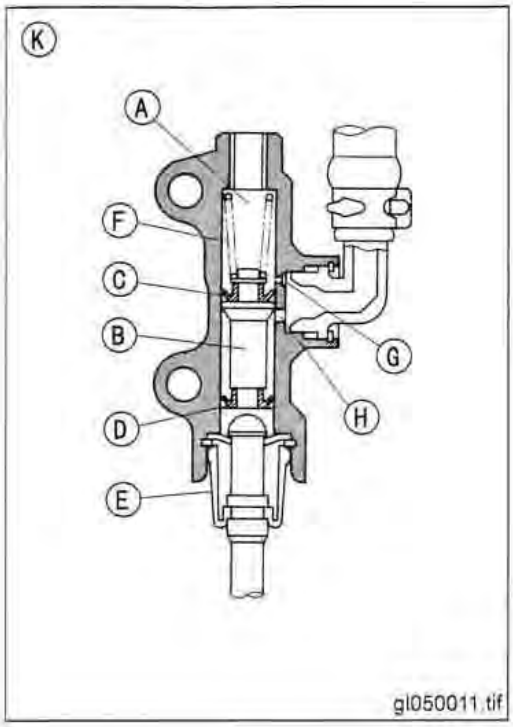

Brake Discs

Brake Disc Removal

- Remove the wheel (see Wheels/Tires chapter).
- Unscrew the mounting bolts, and take off the disc.

Brake Disc Installation

- Install the brake disc on the wheel so that the marked side [A] faces out.
- Apply a non-permanent locking agent to the threads of the brake disc bolts [B].
- Tighten:

Torque - Brake Disc Bolts: 27 N·m (2.8 kg·m, 20.0 ft·lb)



Brake Disc Wear

★ Replace the disc if the sliding surface [A] has worn past the service limit.

Front Disc Thickness
Standard: 5.8 ~ 6.2 mm
Service Limit: 5.5 mm

Rear Disk Thickness
Standard: 6.8 ~ 7.2 mm
Service Limit: 6.0 mm



Brake Disc Warp

- Jack up the motorcycle so that the wheel is off the ground (see Wheels/Tires chapter).
- For front disc inspection, turn the handlebar fully to one side.
- Set up a dial gage against the disc [A] as shown and measure disc runout, while turning [B] the wheel by hand.

★ If runout exceeds the service limit, replace the disc.

Disc Runout
Standard: TIR 0.2 mm or less
Service Limit: TIR 0.3 mm

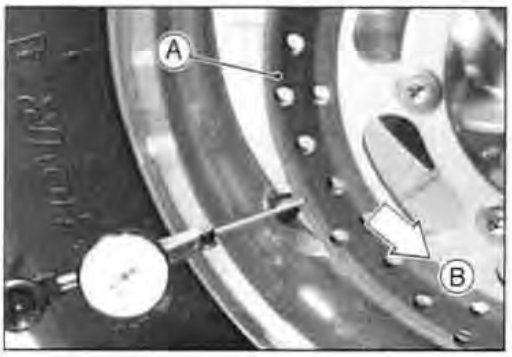

Brake Fluid

Level Inspection

In accordance with the Periodic Maintenance Chart, inspect the brake fluid level in the front and rear brake fluid reservoirs.

- Check that the brake fluid level in the front brake reservoir [A] is between the upper [B] and the lower [C] level lines.

NOTE

Hold the reservoir horizontal by turning the handlebar when checking brake fluid level.

★ If the fluid level is lower than the lower level line, fill the reservoir to the upper level line.

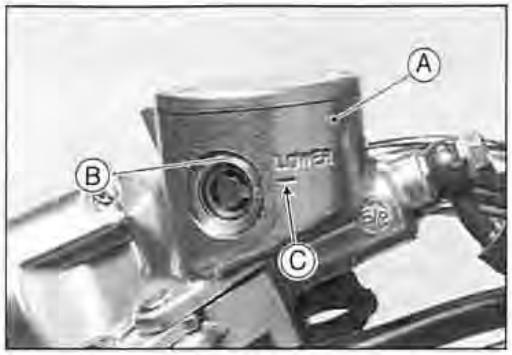

- Check that the brake fluid level in the rear brake reservoir [A] is between the upper [B] and the lower [C] level lines.

★ If the fluid level is lower than the lower level line, fill the reservoir to the upper level line.

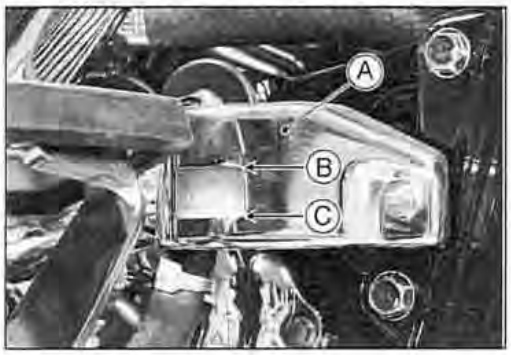

⚠WARNING

Do not mix two brands of fluid. Change the brake fluid in the brake line completely if the brake fluid must be refilled but the type and brand of the brake fluid that is already in the reservoir are unidentified. After changing the fluid, use only the same type and brand of fluid thereafter.

Brake Fluid Recommendation

Recommended fluids are given in the table below. If none of the recommended fluids are available, use extra heavy-duty brake fluid only from a container marked D.O.T.4.

NOTE

Brake fluid of D.O.T.4 is installed in the brake system when shipped.

Recommended Disc Brake Fluid
Grade: D.O.T.4

Brake Fluid Change

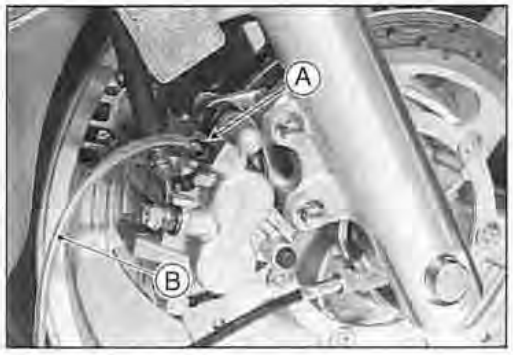

NOTE

The procedure to change the front brake fluid is as follows. Changing the rear brake fluid is the same as for the front brake.

- Level the brake fluid reservoir.
- Remove the reservoir cap.
- Remove the rubber cap from the bleed valve [A] on the caliper.
- Attach a clear plastic hose [B] to the bleed valve, and run the other end of the hose into a container.
- Fill the reservoir with new brake fluid.
- Temporarily install the reservoir cap.
- Change the brake fluid as follows:

NOTE

The fluid level must be checked often during the changing operation and replenished with fresh brake fluid. If the fluid in the reservoir runs out any time during the changing operation, the brakes will need to be bled since air will have entered the brake line.

Front brake: Repeat the above steps for the other caliper.

Brake Fluid

□ Repeat this operation until fresh brake fluid comes out from the plastic hose or the color of the fluid changes.
Open the bleed valve [A].
Pump the brake lever and hold it [B].
Close the bleed valve [C].
Release the brake lever [D].



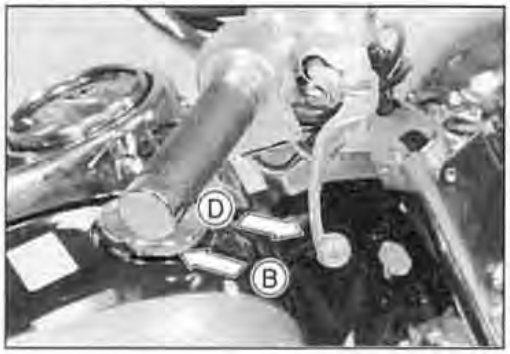

- Remove the clear plastic hose.
- Install the reservoir cap.
- Tighten the bleed valve, and install the rubber cap.

Torque - Caliper Bleed Valve: 7.8 N·m (0.80 kg·m, 69 in·lb)
Front Brake Reservoir Cap Screws: 1.5 N·m (0.15 kg·m, 13 in·lb)

- After changing the fluid, check the brake for good braking power, no brake drag, and no fluid leakage.

★ If necessary, bleed the air from the lines.

Bleeding the Brake Line

The brake fluid has a very low compression coefficient so that almost all the movement of the brake lever or pedal is transmitted directly to the caliper for braking action. Air, however, is easily compressed. When air enters the brake lines, brake lever or pedal movement will be partially used in compressing the air. This will make the lever or pedal feel spongy, and there will be a loss in braking power.

⚠ WARNING

Be sure to bleed the air from the brake line whenever brake lever or pedal action feels soft or spongy after the brake fluid is changed, or whenever a brake line fitting has been loosened for any reason.

Brake Fluid

NOTE

The procedure to bleed the front brake line is as follows. Bleeding the rear brake line is the same as for the front brake.

- Remove the reservoir cap, and fill the reservoir with fresh brake fluid to the upper level line in the reservoir.
- With the reservoir cap off, slowly pump the brake lever several times until no air bubbles can be seen rising up through the fluid from the holes at the bottom of the reservoir.
- Install the reservoir cap.



- Remove the rubber cap from the bleed valve on the caliper.
- Attach a clear plastic hose to the bleed valve, and run the other end of the hose into a container.
- Bleed the brake line and the caliper as follows:

Repeat this operation until no more air can be seen coming out into the plastic hose.

Pump the brake lever until it becomes hard, and apply the brake lever and hold it [A].

Quickly open and close [B] the bleed valve while holding the brake lever applied.

Release the brake lever [C].

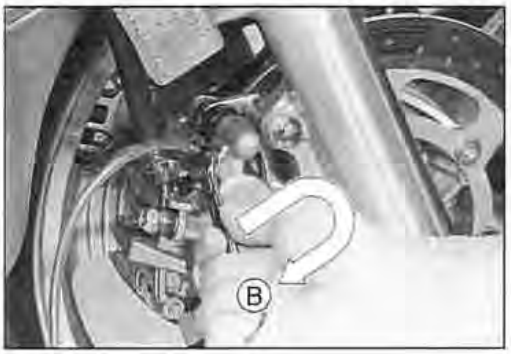

NOTE

The fluid level must be checked often during the bleeding operation and replenished with fresh brake fluid as necessary. If the fluid in the reservoir runs completely out any time during bleeding, the bleeding operation must be done over again from the beginning since air will have entered the line.

Tap the brake hose lightly from the caliper to the reservoir for more complete bleeding.

Front brake: Repeat the above steps for the other caliper.

- Remove the clear plastic hose.
- Tighten:

Torque - Caliper Bleed Valve: 7.8 N·m (0.80 kg·m, 69 in·lb)
Front Brake Reservoir Cap Screws: 1.5 N·m (0.15 kg·m, 13 in·lb)

- Check the fluid level.
- After bleeding is done, check the brake for good braking power, no brake drag, and no fluid leakage.

Brake Fluid

⚠WARNING

When working with the disc brake, observe the precautions listed below.

1. Never reuse old brake fluid.
2. Do not use fluid from a container that has been left unsealed or that has been open for a long time.
3. Do not mix two types and brands of fluid for use in the brake. This lowers the brake fluid boiling point and could cause the brake to be ineffective. It may also cause the rubber brake parts to deteriorate.
4. Don't leave the reservoir cap [A] off for any length of time to avoid moisture contamination of the fluid.
5. Don't change the fluid in the rain or when a strong wind is blowing.
6. Except for the disc pads and disc, use only disc brake fluid, isopropyl alcohol, or ethyl alcohol for cleaning brake parts. Do not use any other fluid for cleaning these parts. Gasoline, engine oil, or any other petroleum distillate will cause deterioration of the rubber parts. Oil spilled on any part will be difficult to wash off completely and will eventually deteriorate the rubber used in the disc brake.
7. When handing the disc pads or disc, be careful that no disc brake fluid or any oil gets on them. Clean off any fluid or oil that inadvertently gets on the pads or disc with a high-flash point solvent. Do not use one which will leave an oily residue. Replace the pads with new ones if they cannot be cleaned satisfactorily.
8. Brake fluid quickly ruins painted surfaces; any spilled fluid should be completely washed away immediately.
9. If any of the brake line fittings or the bleed valve is opened at any time, the **AIR MUST BE BLED FROM THE BRAKE LINE**.



Brake Hoses

Brake Hose Removal/Installation

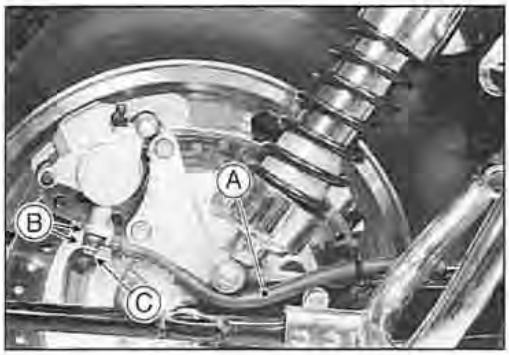

CAUTION

Brake fluid quickly ruins painted surfaces; any spilled fluid should be completely washed away immediately.

- When removing the brake hose, take care not to spill the brake fluid on the painted or plastic parts.
- When removing the brake hose [A], temporarily secure the end of the brake hose to some high place to keep fluid loss to a minimum.
- Immediately wash away any brake fluid that spills.
- There are washers [B] on each side of the brake hose fitting. Replace them with new ones when installing.
- When installing the hoses, avoid sharp bending, kinking, flattening or twisting, and route the hoses according to Cable, Wire, and Hose Routing section in the General Information chapter.
- Tighten the banjo bolts [C] on the hose fittings.

Torque - Brake Hose Banjo Bolts: 25 N·m (2.5 kg·m, 18.0 ft·lb)

- Fill the brake line after installing the brake hose (see Brake Fluid Changing).

Brake Hose Inspection

- The high pressure inside the brake line can cause fluid to leak or the hose to burst if the line is not properly maintained. Bend and twist the rubber hose while examining it.

★ Replace it if any cracks or bulges are noticed.

Suspension

Table of Contents

Exploded View 12-2
Specifications 12-6
Front Fork 12-7
  Fork Oil Change 12-7
  Removal (each fork leg) 12-8
  Installation 12-9
  Disassembly 12-10
  Assembly 12-11
  Inner Tube, Outer Tube Inspection 12-13
  Spring Inspection 12-14
Rear Shock Absorber 12-15
  Rebound Damping Adjustment 12-15
  Air Pressure Adjustment 12-15
  Removal 12-16
  Installation 12-17
  Rear Shock Absorber Inspection 12-17
  Scrapping 12-17
Swingarm 12-18
  Removal 12-18
  Installation 12-19
  Swingarm Bearing Removal 12-19
  Swingarm Bearing Installation 12-20
  Grease Seal and Needle Bearing Lubrication 12-20
  Swingarm Bearing, Sleeve Inspection 12-20

Exploded View

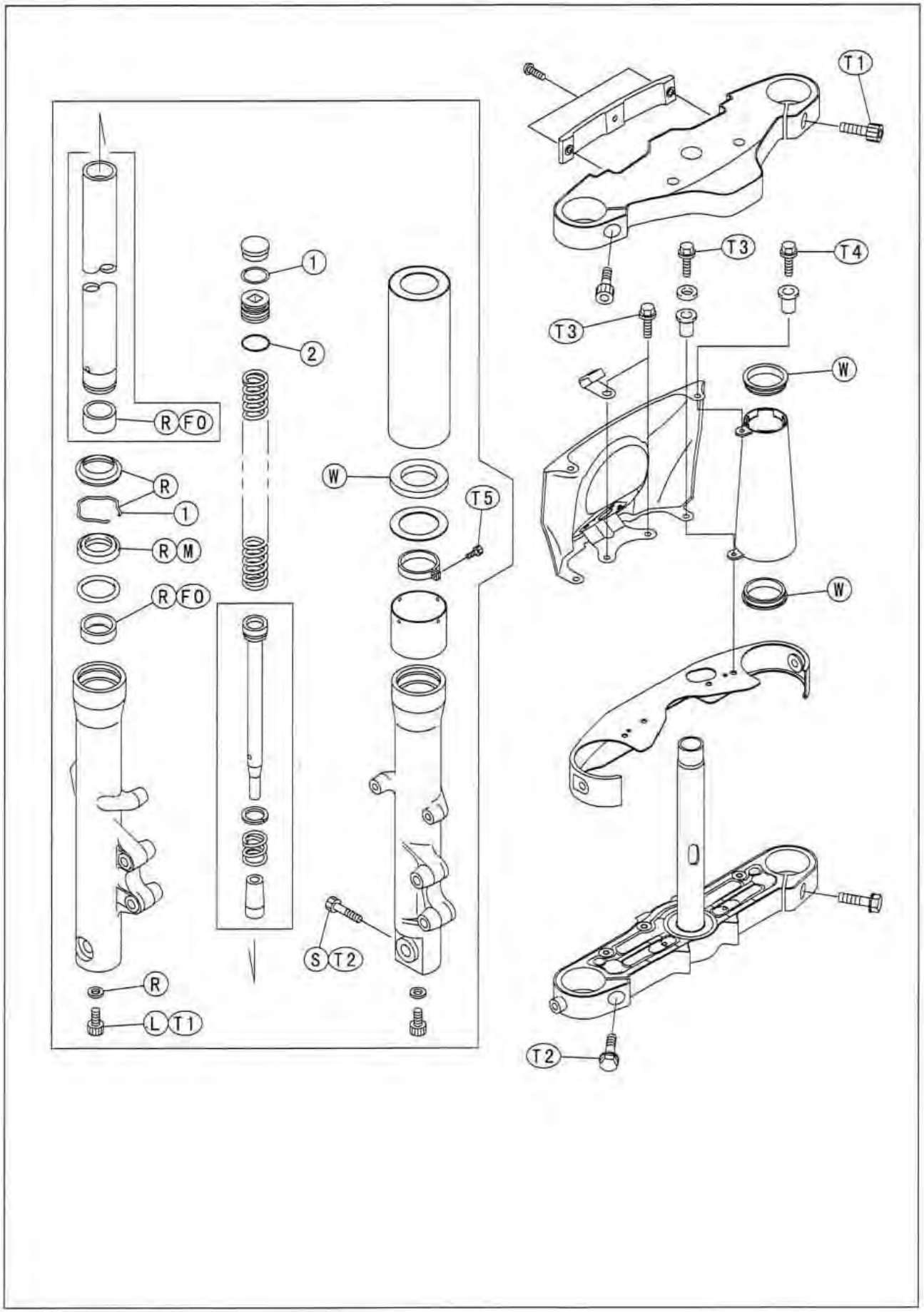

Exploded View

1. Retaining Ring
2. O-ring

FO: Apply fork oil.
L: Apply a non-permanent locking agent.
M: Apply molybdenum disulfide grease.
R: Replacement Parts
S: Follow the specific tightening sequence
W: Apply soap and water solution.
T1: 20 N·m (2.0 kg·m, 14.5 ft·lb)
T2: 34 N·m (3.5 kg·m, 25 ft·lb)
T3: 7.4 N·m (0.75 kg·m, 65 in·lb, ø6)
T4: 4.4 N·m (0.45 kg·m, 39 in·lb, ø5)
T5: 3.9 N·m (0.40 kg·m, 35 in·lb)

Exploded View

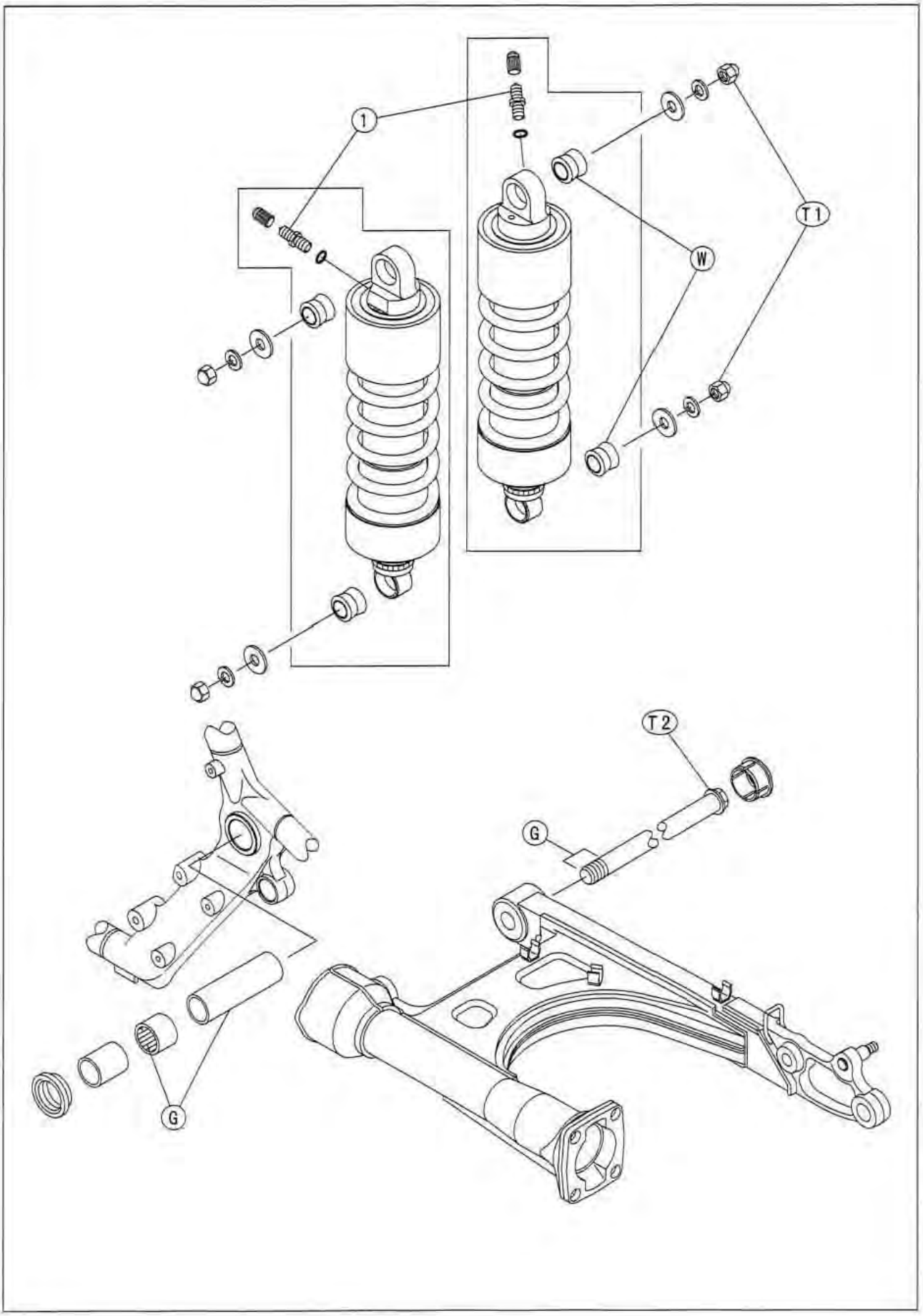

Exploded View

1. Air Valves
G: Apply grease.
W: Apply soap and water solution.
T1: 34 N·m (3.5 kg·m, 25 ft·lb)
T2: 125 N·m (13.0 kg·m, 94 ft·lb)

Specifications

Item	Standard
Front Fork (per one unit):	
Frok inner tube diameter	φ41 mm
Fork spring setting	Non-adjustable
Air pressure	Atmospheric pressure (Non-adjustable)
Rebound damper setting	Non-adjustable
Fork oil viscosity	SAE 10W-20
Fork oil capacity	431 ± 2.5 mL (completely dry)
	approx. 365 mL (when changing oil)
Fork oil level	Fully compressed, without fork spring,
	below from inner tube top: 176 ± 2 mm
Fork spring free length	572 mm (Service limit: 560 mm)
Rear Shock Absorber:	
Rebound damper set	No.2 of 4 positions
Air pressure	Atomospheric pressure
Usable range	Atomospheric pressure ~ 294 kPa (3.0 kg/cm^2, 43 psi)

Special Tools - Jack: 57001-1238
Attachment Jack: 57001-1398
Fork Oil Level Gauge: 57001-1290
Fork Cylinder Holder Handle: 57001-183
Fork Cylinder Holder Adapter: 57001-1057
Fork Outer Tube Weight: 57001-1218
Front Fork Oil Seal Driver: 57001-1219
Oil Seal & Bearing Remover: 57001-1058
Bearing Driver Set: 57001-1129

Front Fork

Fork Oil Change

The oil should be changed in accordance with the Periodic Maintenance Chart.

- Remove the front fork (see Front Fork Removal).
- Remove the top cap.
- Hold the outer tube vertically in a vise.
- Push the top plug [A] down to remove the plug retaining ring [B], and then remove the plug.

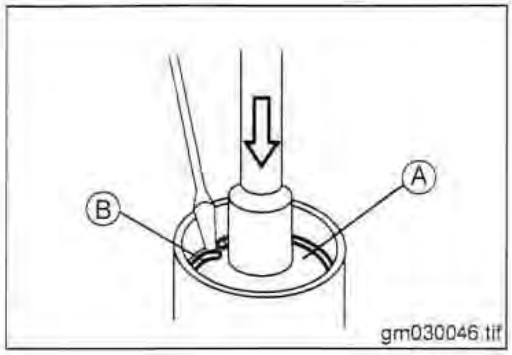

- Remove:
  Fork Spring [A]

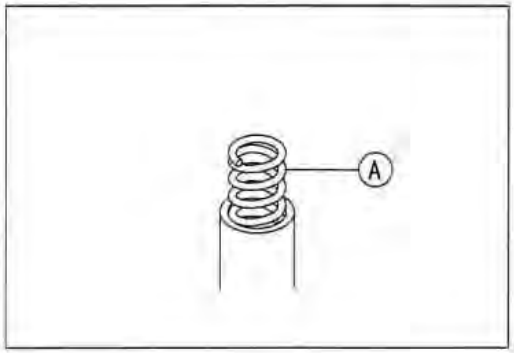

- Pour out the fork oil [A] with the fork upside down.
- Hold the outer tube vertically in a vise.
- Fill the front fork with the specified oil.

Fork Oil Viscosity: SAE10W-20
Fork Oil Capacity (when changing oil): Approx. 365 mL

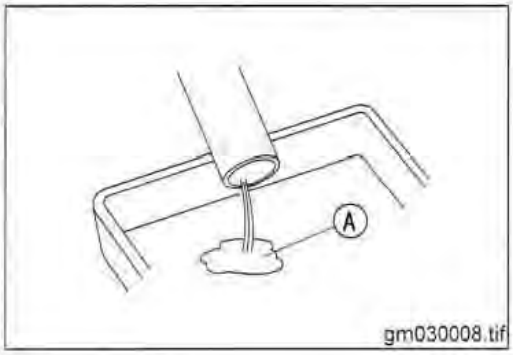

- Wait for about five minutes so that any suspended air bubbles can surface.
- Measure the oil level, using the fork oil level gauge [A].

Special Tool - Fork Oil Level Gauge: 57001-1290

Set the gauge stopper [B] so that its lower side shows the oil level distance specified [C].
Insert the gage tube into the inner tube [D] and position the stopper across the top of the inner tube [E].
Pull the handle slowly to draw out the excess oil until no more oil comes up the tube.

★ If no oil is drawn out from the beginning, there is not enough oil in the fork. Pour in some more oil, then draw out the excess.

Front Fork Oil Level (Fully compressed without fork spring)
Standard: 176 ± 2 mm

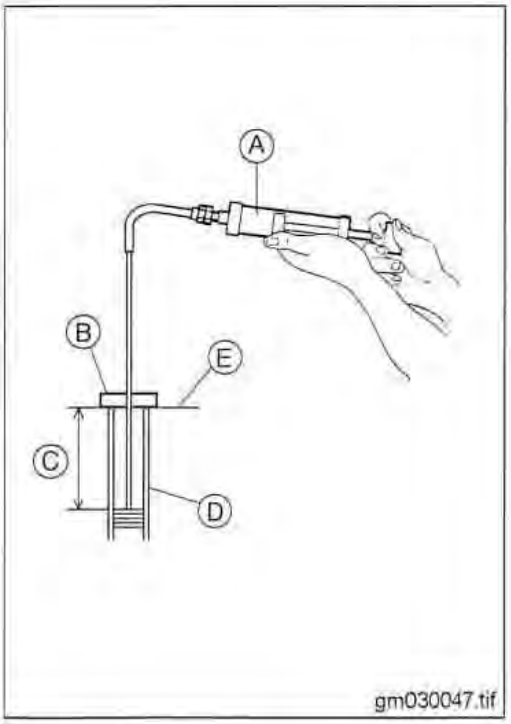

Front Fork

- Install the fork spring with the smaller diameter end [A] facing down [B].
- Tighten:

Torque - **Upper Fork Clamp Bolts: 20 N·m (2.0 kg·m, 14.5 ft·lb)**
Lower Fork Clamp Bolts: 34 N·m (3.5 kg·m, 25 ft·lb)
Front Axle Clamp Bolt: 34 N·m (3.5 kg·m, 25 ft·lb)
Front Axle Nut: 110 N·m (11.0 kg·m, 80 ft·lb)
Front Caliper Mounting Bolts: 34 N·m (3.5 kg·m, 25 ft·lb)

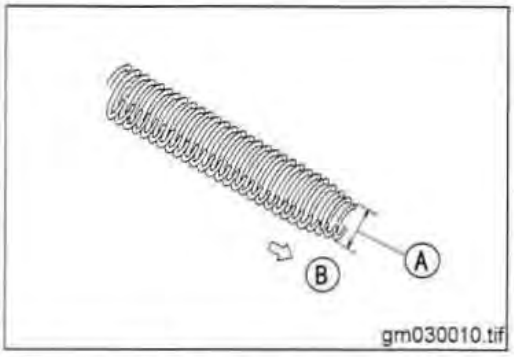

Removal (each fork leg)

- Lift the front wheel off the ground, using the jack [A], the attachment jack [B], and a jack [C].

Special Tools - **Jack: 57001-1238**
Attachment Jack: 57001-1398

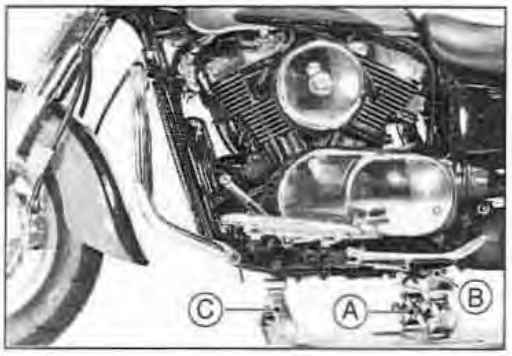

- Remove:
  Windshield (see Frame chapter)
  Front Calipers
  Front Wheel (see Wheels/Tires chapter)
  Front Fender (see Frame chapter)
  Fuel Tank [A] (see Fuel System chapter)
- Unscrew the bolts [B] and remove the windshield bracket [C].

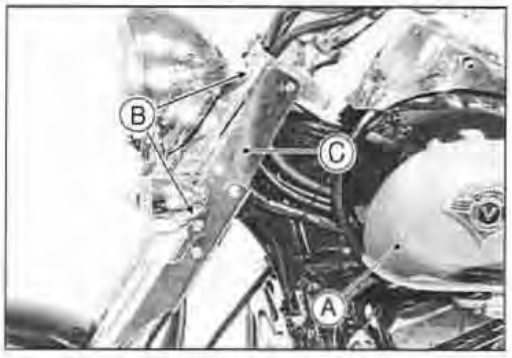

- Remove:
  Handlebar [A]
- Remove the cable holder [B] by unscrewing two bolts [C].

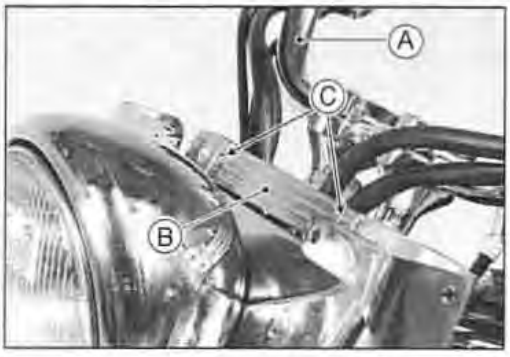

- Remove:
  Stem Head Nut [A]
  Washer [B]
  O-ring [C] under Washer
  Upper Clamp Bolts [D]
  Steering Stem Head [E]

NOTE

Be sure to remove the O-ring for removal of the steering stem head. Replace the O-ring with a new one.

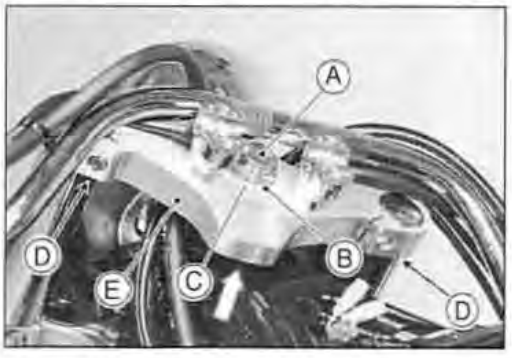

Front Fork

- Remove the upper fork cover [A] by unscrewing the mounting bolts [B].

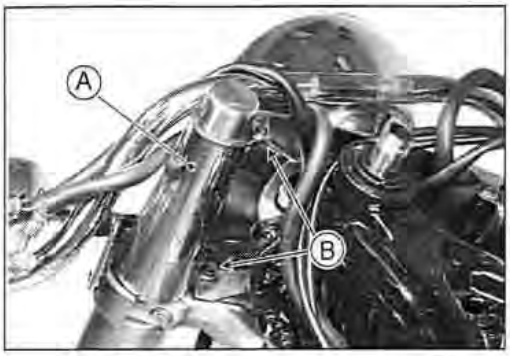

- Loosen the lower fork clamp bolt [A] and remove the front fork [B].
- With a twisting motion [C], work the fork leg down out.

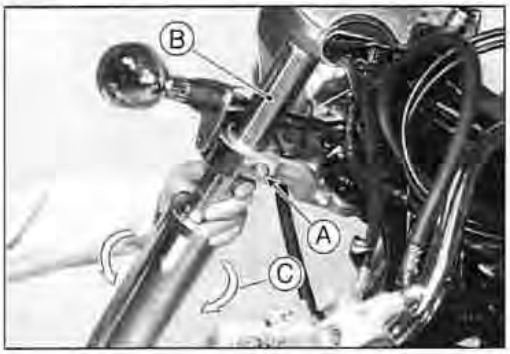

Installation

- Run the cables, wires, and hoses as shown in the Cable, Wire, and Hose Routing section of the General Information chapter.
- Temporarily install the front fork.
- Apply soap and water solution to the rubber dampers [A] and install the upper fork cover [B].
- Install (see Steering Adjustment in Steering chapter):
  Steering Stem Head
  O-ring, Washer, and Stem Head Nut
  Upper Fork Clamp Bolts

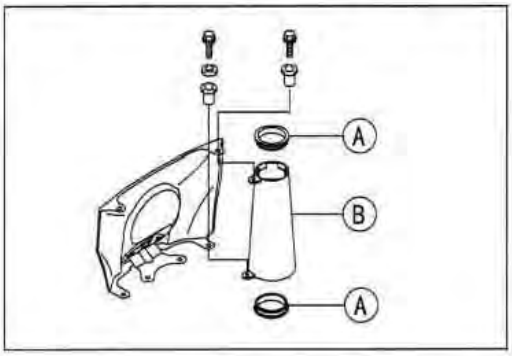

- Adjust the fork position so that the inner tube top end [A] is **0 ~ 0.5 mm** [B] lower than the upper surface [C] of the steering stem head.
  Front [D]
- Install the removed parts.

Torque - **Stem Head Nut: 88 N·m (9.0 kg·m, 65 ft·lb)**
Lower Fork Clamp Bolts: 34 N·m (3.5 kg·m, 25 ft·lb)
Upper Fork Clamp Bolts: 20 N·m (2.0 kg·m, 14.5 ft·lb)
Handlebar Clamp Bolts: 34 N·m (3.5 kg·m, 25 ft·lb)

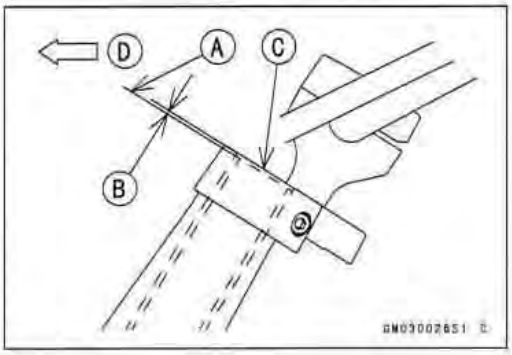

- Check the front brake effectiveness after installation.

⚠ WARNING

Do not attempt to ride the motorcycle until a full brake lever is obtained by pumping the brake lever until the pads are against the disc. The brake will not function on the first application of the lever if this is not done.

Front Fork

Disassembly

- Remove the front fork (see Front Fork Removal in this chapter).
- Remove the fork cover [A]. The washer [B], and damper [C] come off.

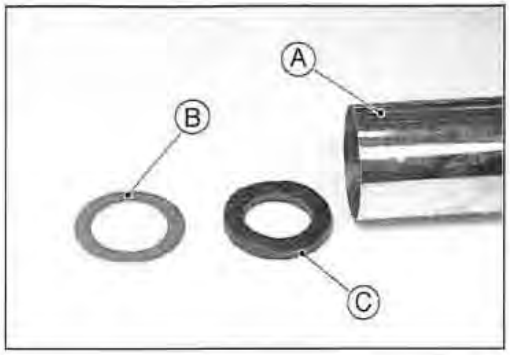

- Unscrew the bolt [A], and remove the spacer [B].

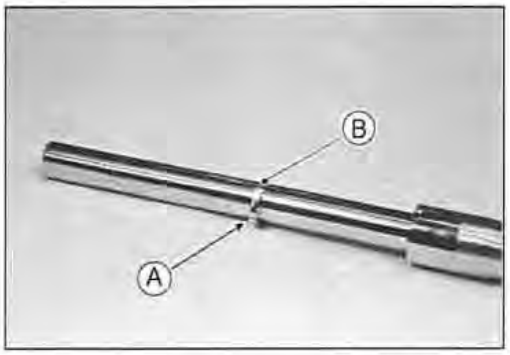

- Drain the fork oil (see Fork Oil Change in this chapter).

The following parts are removed during draining the fork oil.
Retaining Ring [A]
Top Plug [B]
Fork Spring [C]

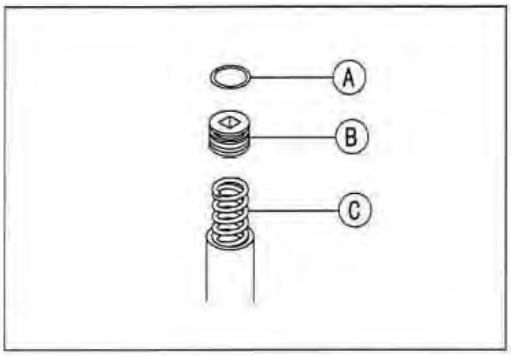

- Hold the front fork horizontally in a vise [A].
- Stop the cylinder unit [B] from turning by using the special tools.
- Unscrew the Allen bolt [C], and take the gasket out of the bottom of the outer tube.

Special Tools - Fork Cylinder Holder Handle: 57001-183 [D]
Fork Cylinder Holder Adapter: 57001-1057 [E]

- Take the cylinder unit out of the inner tube.

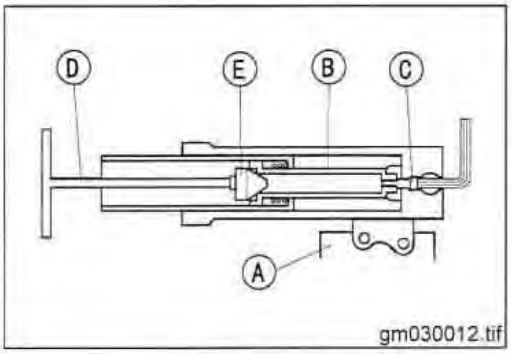

- Tap the dust seal cover [A] out of the fork tube, using a thin-bladed screwdriver.

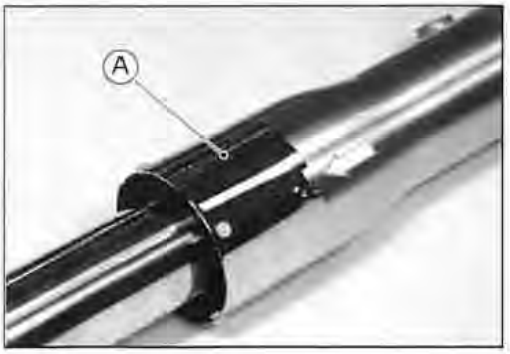

Front Fork

- Separate the inner tube from the outer tube as follows:
  - Remove the dust seal [A] from the outer tube.
  - Remove the retaining ring [B] from the outer tube.

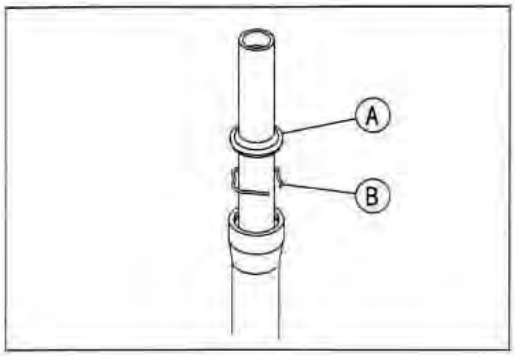

  - Use the fork outer tube weight [A] to separate the outer tube [B] from the inner tube [C].
  - Holding the inner tube by hand, pull the outer tube several times to pull out the inner tube.

    Special Tool - Fork Outer Tube Weight: 57001-1218

  - Take out the cylinder base out of the outer tube.

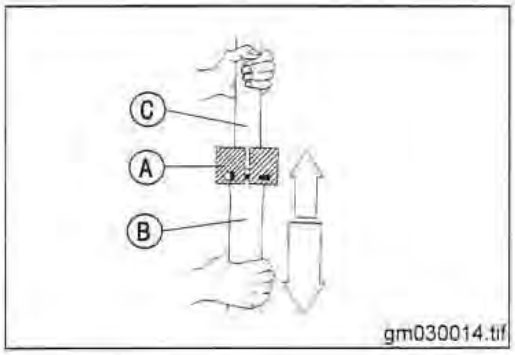

- Remove the guide bushings [A], washer [B], and oil seal [C] from the inner tube.

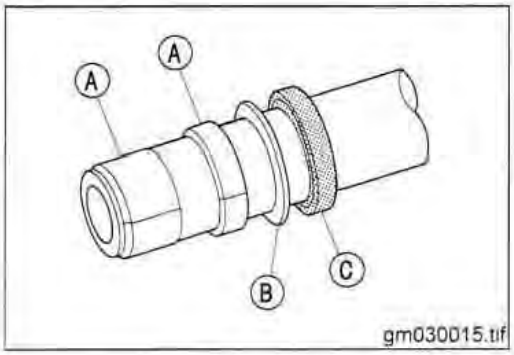

Assembly

- Replace the following parts with new ones after removal.
  - Dust Seal [A]
  - Retaining Ring [B]
  - Oil Seal [C]
  - Inner Guide Bushing [D]
  - Outer Guide Bushing [E]
  - Bottom Allen Bolt Gasket [F]

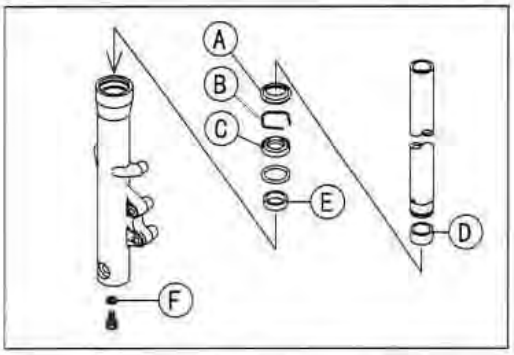

- Put the cylinder unit [A] with the spring into the inner tube [B], protruding from the inner tube, and install the cylinder base [C] onto the bottom end of the cylinder unit.
  - Install the cylinder base with the tapered end [D] up.
- Install the inner tube, cylinder unit, and cylinder base as a set into the outer tube.

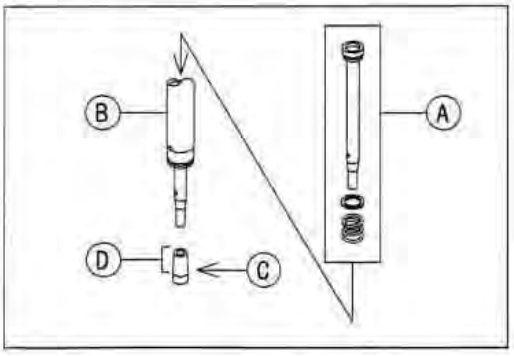

Front Fork

- Install the new guide bushing [A] with a used guide bushing [B] on it by tapping the used guide bushing with fork oil seal driver [C] until it stops.
- The split [D] of the bushing should face toward the side [E] of the vehicle.

Special Tool - Front Fork Oil Seal Driver: 57001-1219

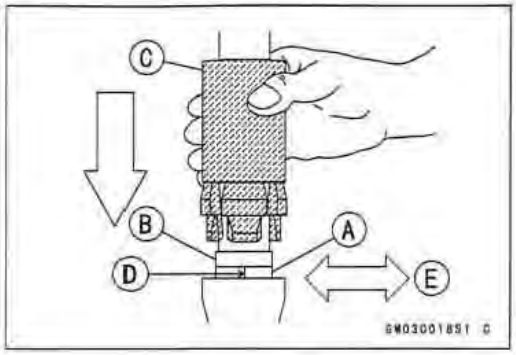

- Apply molybdenum disulfide grease to the oil seal lips and install the washer and the oil seal [A] into the outer tube.

Special Tool - Front Fork Oil Seal Driver: 57001-1219 [B]

- Install:
  Retaining Ring
  Dust Seal

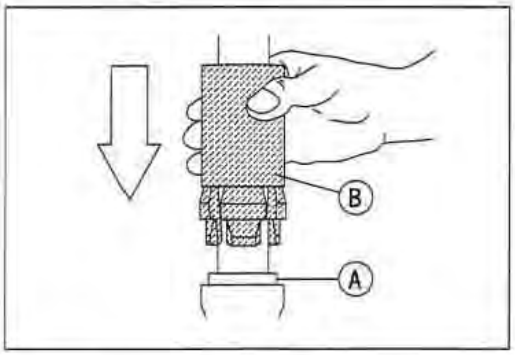

- Face the notch [A] of the dust seal cover rearward [B] and install the dust seal cover by tapping with the fork outer tube weight [C] until it stops.

Special Tool - Fork Outer Tube Weight: 57001-1218

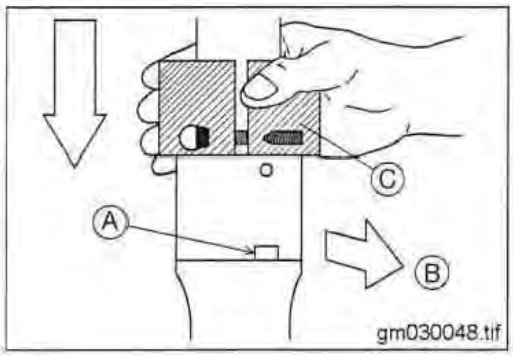

- Stake [A] the dust seal cover with a punch.



- Apply a non-permanent locking agent to the threads of the Allen bolt and screw the Allen bolt into the bottom of the outer tube.
- Hold the front fork horizontally in a vise [A].
- Hold the cylinder unit [B] with the special tools and tighten the Allen bolt [C].

Special Tools - Fork Cylinder Holder Handle: 57001-183 [D]
Fork Cylinder Holder Adapter: 57001-1057 [E]

Torque - Bottom Allen Bolt: 20 N·m (2.0 kg·m, 14.5 ft·lb)

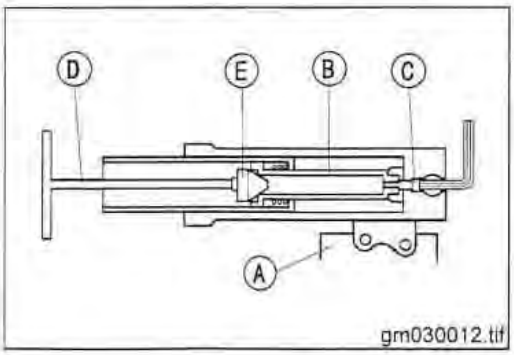

Front Fork

- Install the spacer [A] so that the distance [B] between the inner tube top [C] and the spacer top is **244.6 mm**.

Torque - Spacer Bolt: 3.9 N·m (0.40 kg·m, 35 in·lb)

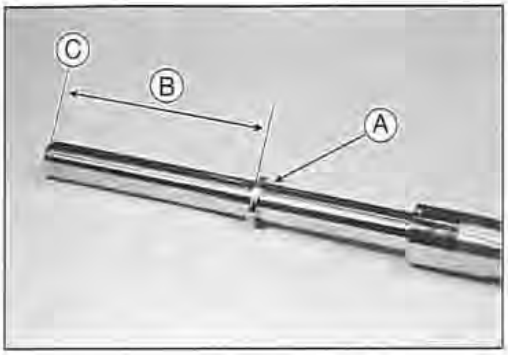

- Apply soap and water solution to the damper.
- Put the damper [A] and washer [B] into the fork cover [C], and install them onto the fork.
- Pour in the specified type of oil and install the parts removed (see Fork Oil Change).

Fork Oil Viscosity: SAE10W-20
Fork Oil Capacity (completely dry) : 431 ± 2.5 mL

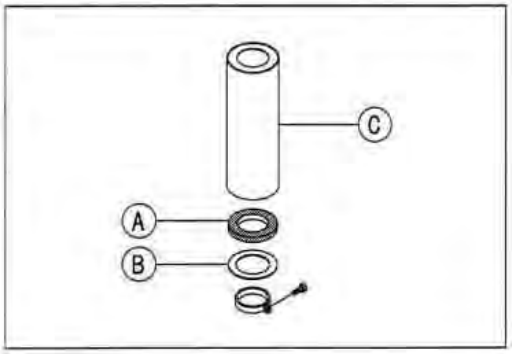

Inner Tube, Outer Tube Inspection

- Visually inspect the inner tube [A] and repair any damage.
- Nick or rust damage can sometimes be repaired by using a wet-stone to remove sharp edges or raised areas which cause seal damage.

★ If the damage is not repairable, replace the inner tube. Since damage to the inner tube damages the oil seal, replace the oil seal whenever the inner tube is repaired or replaced.

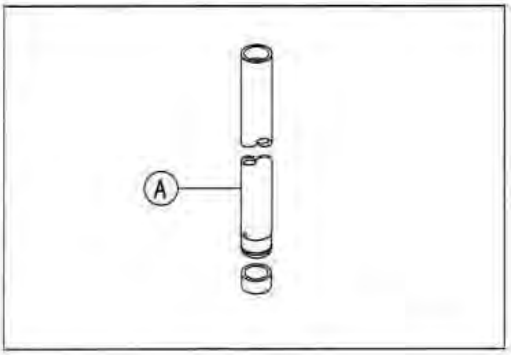

CAUTION

If the inner tube is badly bent or creased, replace it. Excessive bending, followed by subsequent straightening, can weaken the inner tube.

- Temporarily assemble the inner and outer tubes, and pump them back and forth manually to check for smooth operation.

★ If you feel binding or catching, the inner and outer tubes must be replaced.

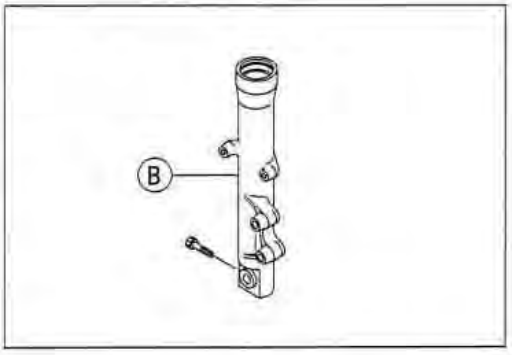

⚠ WARNING

A straightened inner or outer fork tube [B] may fail in use, possibly, causing an accident. Replace a badly bent or damaged inner or outer tube, and inspect the other tube carefully before reusing it.

Front Fork

Spring Inspection

- Since the fork spring [A] becomes shorter as it weakens, check its free length [B] to determine its condition.

★ If the spring of either fork leg is shorter than the service limit, it must be replaced. If the length of the replacement spring and that of the remaining spring vary greatly, the remaining spring should also be replaced in order to keep the fork legs balanced for motorcycle stability.

Fork Spring Free Length

Standard:	**572 mm**
Service Limit:	**560 mm**

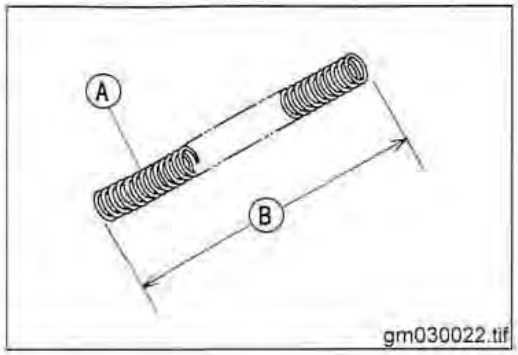

Rear Shock Absorber

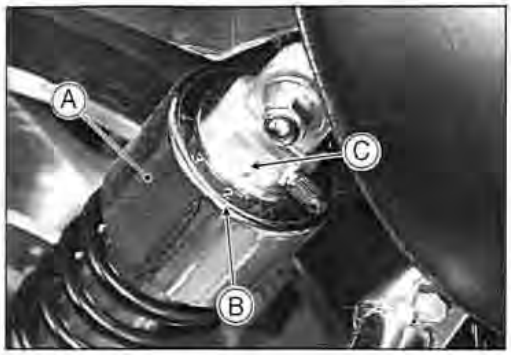

Rebound Damping Adjustment

The rebound damping force adjuster on each rear shock absorber has 4 positions so that the rebound damping force can be adjusted for different road and loading conditions. The numbers on the adjuster show the setting position.

- Turn the adjuster [A] until the desired number [B] aligns with the triangular mark [C].

The standard adjuster setting is **No.2** for an average-build rider of 68 kg (150 lb) with no passenger and no accessories.

★ If the damper setting feels too soft or too stiff, adjust it in accordance with the following table.

Rebound Damping Adjustment

Adjuster Position	Damping Force	Setting	Load	Road	Speed
1	Weak	Soft	Light	Good	Low
2	↑	↑	↑	↑	↑
3	↓	↓	↓	↓	↓
4	Strong	Hard	Heavy	Bad	High

Air Pressure Adjustment

The air pressure in the rear shock absorbers can be adjusted for different road and loading conditions.

The following table shows an example of air pressure adjustment. To obtain stable handling and a suitable ride, adjust the air pressure as indicated. The standard air pressure is **atmospheric pressure** for an average-build rider of 68 kg (150 lb) with no passanger and no accessories. Ordinarily, the heavier the total load becomes, the higher the air pressure should be set.

Air Pressure Adjustment

Air Pressure	Setting	Load	Road
Atmospheric Pressure	Soft	Light	Good
↑	↑	↑	↑
↓	↓	↓	↓
294 kPa (3.0 kg/cm², 43 psi)	Hard	Heavy	Bad

- Adjust the air pressure:

NOTE

Check and adjust the air pressure when the rear shock absorbers are cold (room temperature).

Raise the rear wheel off the ground, using the jack [A], and the attachment jack [B].

Special Tools - Jack: 57001-1238
Attachment Jack: 57001-1290

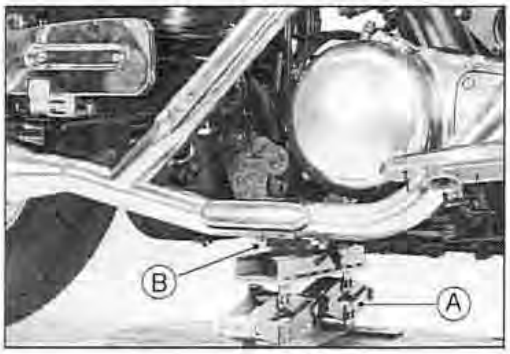

Rear Shock Absorber

- Take off the air valve caps [A] on the right and left shock absorbers. Front [B]
- Check the air pressure with the air pressure gage.

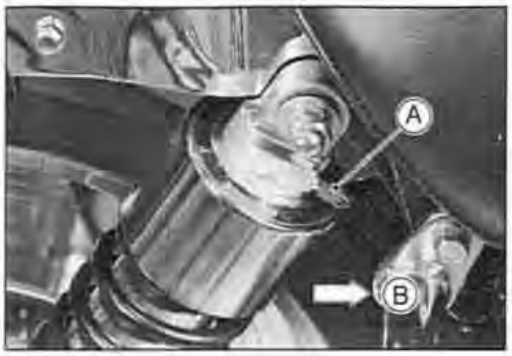

NOTE

- *Do not use tire gages for checking air pressure. They may not indicate the correct air pressure because of air leakage that occur when the gage is applied to the valve.*

- To lower the air pressure, push the valve core in slightly. To raise the pressure, inject air through the valve with a tire pump. Change the air pressure within the range specified in the preceding table to suit various riding conditions.

CAUTION

Inject air little by little so that air pressure does not rise rapidly. Air pressure exceeding 490 kPa (5.0 kg/cm^2, 71 psi) may damage the oil seal.
Try to set the air pressure of the right and left shock absorbers as equally as possible.

⚠WARNING

Be sure to adjust the air pressure within the usable range. Pressure too high can produce a hazardous riding condition. Only air or nitrogen gas can be used. Never inject oxygen or any kind of explosive gas.

Removal

- Lift the rear wheel off the ground, using the jack and the attachment jack.

Special Tools - Jack: 57001-1238
Attachment Jack: 57001-1398

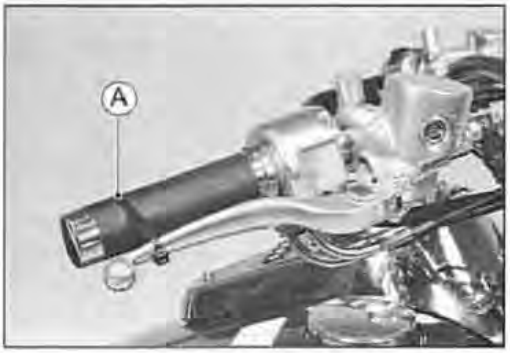

- Squeeze the brake lever slowly and hold it with a band [A].

CAUTION

Be sure to hold the front brake when removing the shock absorber, or the motorcycle may fall over. The motorcycle could be damaged.

⚠WARNING

Be sure to hold the front brake when removing the shock absorber, or the motorcycle may fall over. It could cause an accident and injury.

Rear Shock Absorber

- Remove the saddlebags (see Frame chapter).
- Remove the cap nuts [A], lockwashers, and flat washers from both ends of the rear shock absorber [B].
- Pull the rear shock absorbers off the frame.

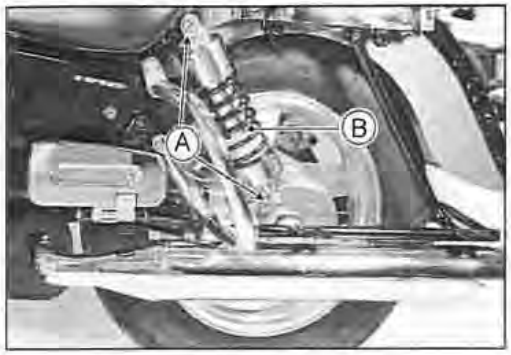

Installation

- Install the rear shock absorber so that the air valve faces forward.
- Tighten the rear shock absorber nuts (cap nuts) to the specified torque.

Torque - Rear Shock Absorber Nuts: 34 N·m (3.5 kg·m, 25 ft·lb)

Rear Shock Absorber Inspection

- Remove the rear shock absorbers [A].
- Visually inspect the following items.
  Smooth Stroke
  Oil Leakage
  Crack or Dent

★ If there is any damage to the rear shock absorber, one unit feels weaker than the other, replace both shock absorbers as a set.

- Visually inspect the rubber bushings [B].

★ If they show any signs of damage, replace them.

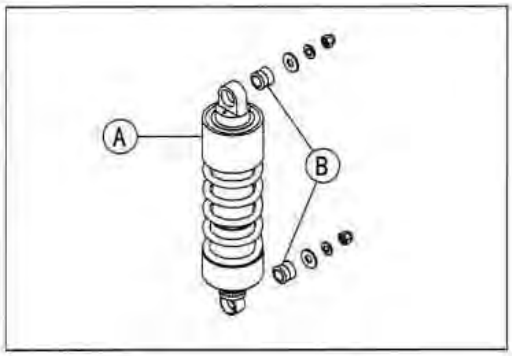

Scrapping

- Remove the rear shock absorber (see this chapter).

⚠ WARNING

Since the rear shock absorber contains air, do not incinerate the rear shock absorber without first releasing the air or it may explode.
Before a rear shock absorber is scrapped, remove the air valve [A].

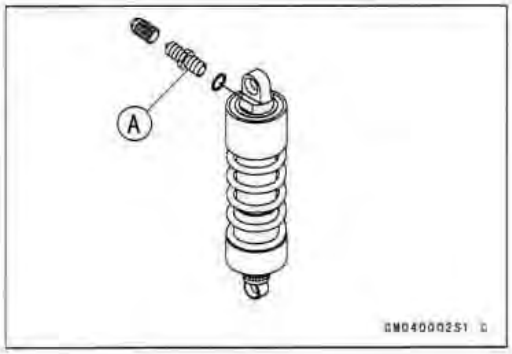

Swingarm

Removal

- Remove the saddlebags (see Frame chapter).
- Before removing the swingarm, unscrew the banjo bolt [A] on the rear caliper [B].
- Temporarily secure the end of the brake hose to some high place to keep fluid loss to a minimum.
- Immediately wash away any brake fluid that spills.
- Detach the rear brake hose [C] from the holders [D] on the swingarm.
- Lift the rear wheel off the ground, using the jack and the attachment jack.

Special Tools - Jack: 57001-1238
Attachment Jack: 57001-1398

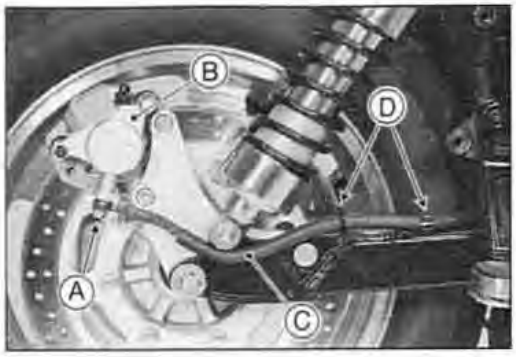

- Squeeze the brake lever slowly and hold it with a band [A] (see Rear Shock Absorber Removal).

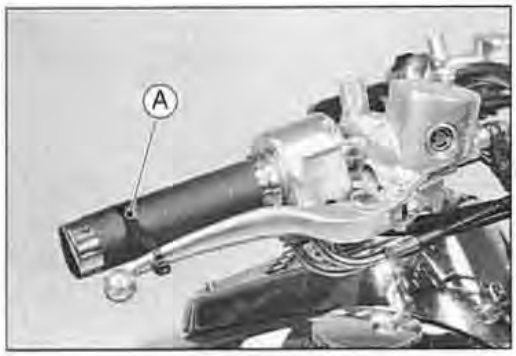

CAUTION

Be sure to hold the front brake when removing the swingarm, or the motorcycle may fall over. The motorcycle could be damaged.

⚠WARNING

Be sure to hold the front brake when removing the swingarm, or the motorcycle may fall over. It could cause an accident and injury.

- Remove:
  Rear Wheel (see Wheels/Tires chapter)
  Both Rear Footpegs
  Final Gear Case (see Final Drive chapter)
- Remove the rear guards [A] and saddlebag stays [B] as a set by removing the bolts [C].
- Remove the right rear shock absorber [D].

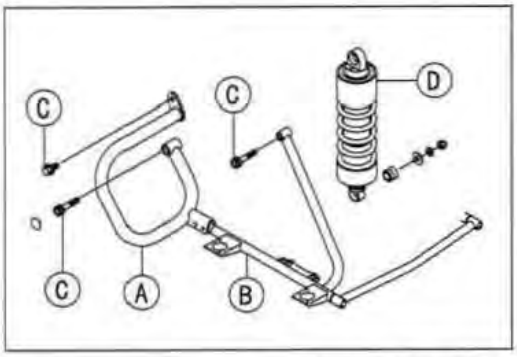

- Pull off the pivot cap.
- Unscrew the pivot shaft [A], and pull it out while turning.
- Pull the swingarm [B] rearward, and take it off.

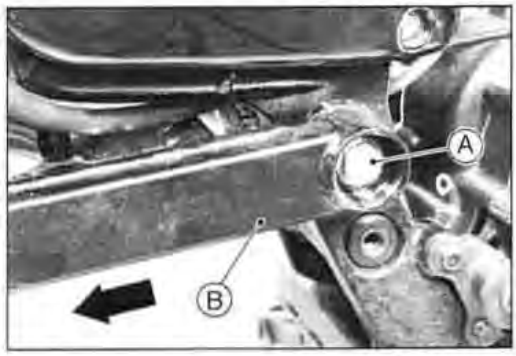

CAUTION

Do not tap the swingarm pivot shaft when removing or installing. Push or pull the pivot shaft while turning the shaft. Tapping on the shaft could damage the needle bearings in the swingarm.

Swingarm

Installation

- Apply grease to the needle bearings and grease seals.
- Apply grease to the threads [A] of the swingarm pivot shaft.

Torque - Swingarm Pivot Shaft: 125 N·m (13.0 kg·m, 94 ft·lb)

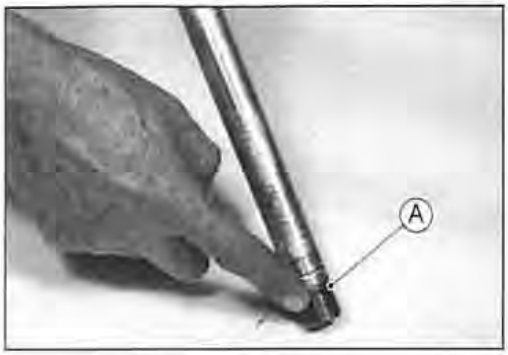

- Move the swingarm up and down [A] to check for abnormal friction.
- Tighten the rear shock absorber nuts to the specified torque.

Torque - Rear Shock Absorber Nuts: 34 N·m (3.5 kg·m, 25 ft·lb)

- Tighten:

Torque - Rear Caliper Mounting Bolts: 32 N·m (3.3 kg·m, 24 ft·lb)
Rear Caliper Holder Bolt: 64 N·m (6.5 kg·m, 47 ft·lb)

- Install the rear wheel (see Wheels/Tires chapter).
- After installing the swingarm, replenish the brake fluid into the reservoir and bleed the brake line (see Bleeding the Brake Line in Brakes chapter).

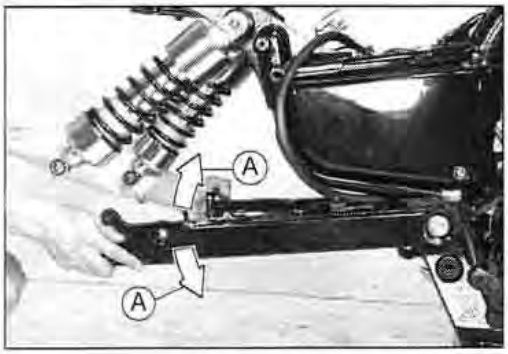

Swingarm Bearing Removal

- Remove:
  Swingarm (see this chapter)
  Right and Left Grease Seals
  Right and Left Sleeves [A]

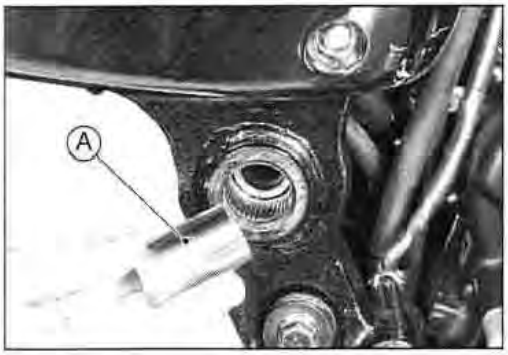

- Remove the needle bearings, using the oil seal & bearing remover [A].

Special Tool - Oil Seal & Bearing Remover: 57001-1058

- Replace the bearings and sleeves with new ones.



Swingarm Bearing Installation

- Apply plenty of grease to the needle bearings, and sleeve.
- Be sure to install the needle bearings so that the manufacturer's marks are faced out. This prevents bearing damage.
- Position the bearings [A] as shown, using a suitable bearing driver in the bearing driver set.

  Sleeves [B]
  Grease Seals [C]
  6 mm [D]

Special Tool - Bearing Driver Set: 57001-1129

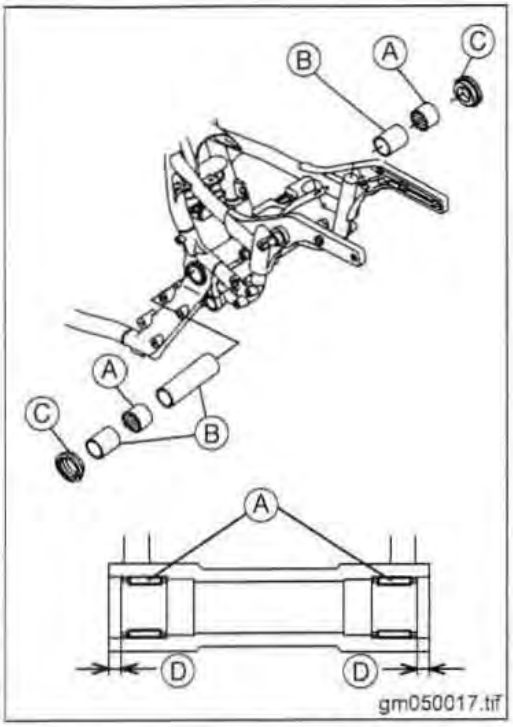

gm050017.tif

Grease Seal and Needle Bearing Lubrication

- Apply grease [A] to the inner surfaces of the needle bearings in accordance with the Periodic Maintenance Chart.
- Apply a thin coat of grease to the lips of the grease seals [B].

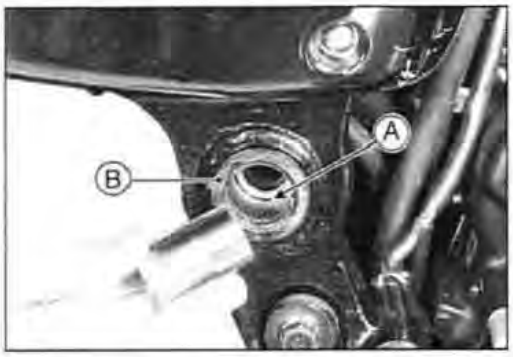

Swingarm Bearing, Sleeve Inspection

CAUTION
Do not remove the bearings for inspection. Remove may damage them.

- Visually inspect the swingarm sleeves [A] and needle bearings [B].
- The rollers in a needle bearing normally wear very little, and wear is difficult to measure. Instead of measuring, inspect the bearing in the swingarm for abrasion, color change, or other damage.

★ If there is any doubt as to the condition of any of the needle bearings or sleeve, replace the sleeve, and needle bearings as a set.

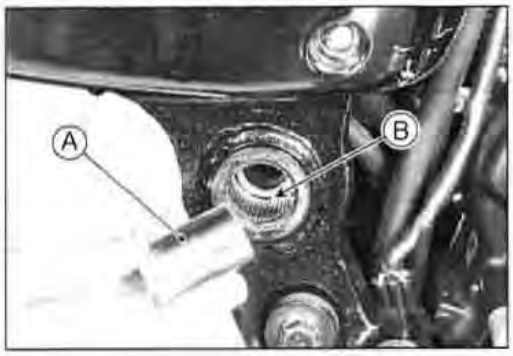

Steering

Table of Contents

Exploded View 13-2
Specifications 13-3
Handlebar 13-4
  Handlebar Removal 13-4
  Handlebar Installation 13-4
Steering 13-5
  Check 13-5
  Adjustment 13-5
Steering Stem 13-7
  Removal 13-7
  Installation 13-8
  Steering Stem Warp 13-10
Steering Stem Bearing 13-11
  Stem Bearing Removal 13-11
  Stem Bearing Installation 13-11
  Stem Bearing Lubrication 13-12
  Stem Cap Deterioration, Damage 13-12

Exploded View

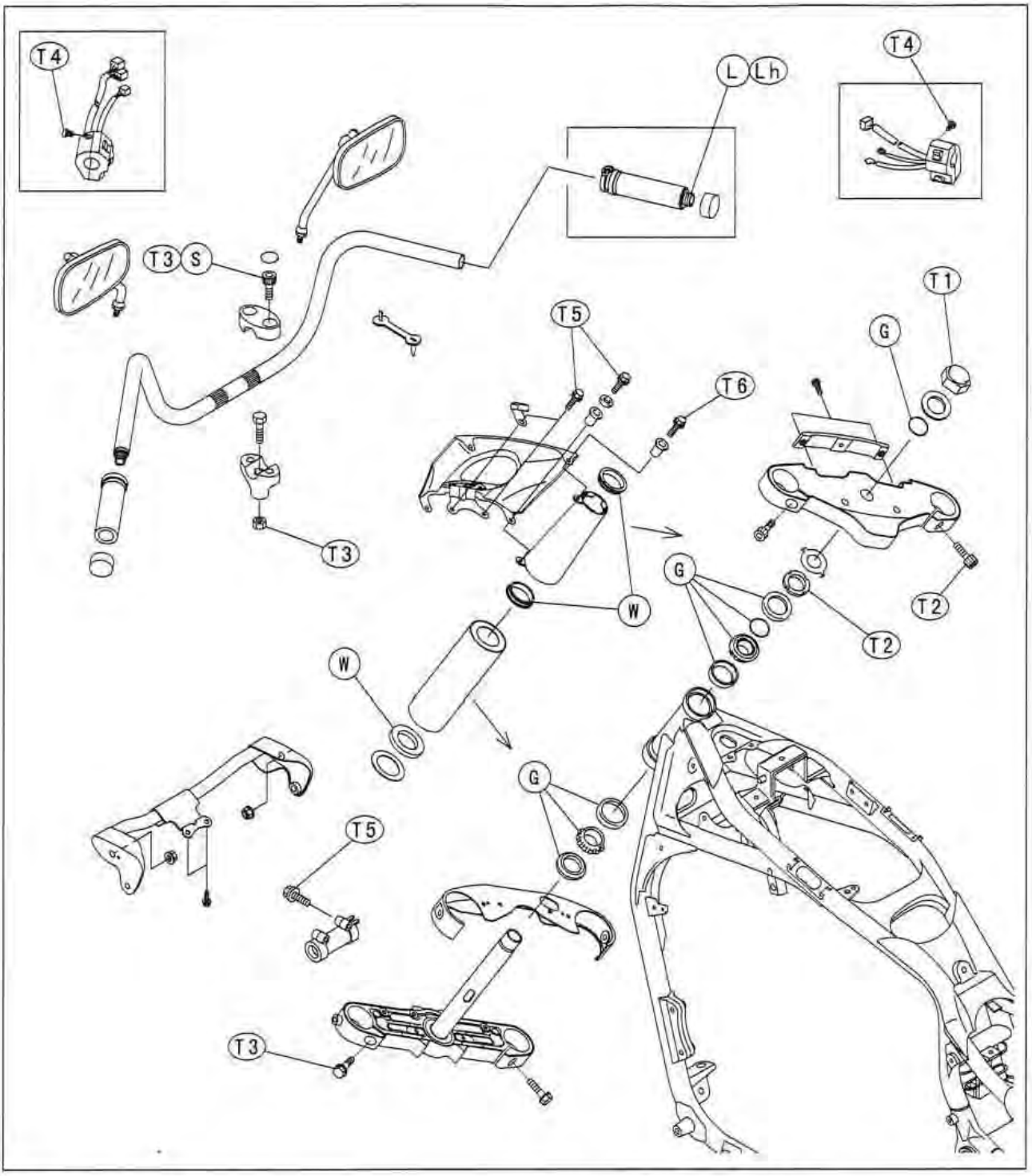

G: Apply grease.
L: Apply a non-permanent locking agent.
Lh: Left-hand Threads
S: Follow the specific tightening sequence.
W: Apply soap and water solution.

T1: 88 N·m (9.0 kg·m, 65 ft·lb)
T2: 20 N·m (2.0 kg·m, 14.5 ft·lb)
T3: 34 N·m (3.5 kg·m, 25 ft·lb)
T4: 3.4 N·m (0.35 kg·m, 30 in·lb)
T5: 7.4 N·m (0.75 kg·m, 65 in·lb)
T6: 4.4 N·m (0.45 kg·m, 39 in·lb)

Specifications

Special Tools - Jack: 57001-1238
Attachment Jack: 57001-1398
Steering Stem Nut Wrench: 57001-1100
Head Pipe Outer Race Remover: 57001-1107
Head Pipe Outer Race Press Shaft: 57001-1075
Head Pipe Outer Race Driver: 57001-1077
Steering Stem Bearing Driver: 57001-1344
Steering Stem Bearing Driver Adapter: 57001-1345

Handlebar

Handlebar Removal

- Remove:
  Windshield (see Frame chapter)
  Clutch Master Cylinder
  Left Handlebar Switch Housing
  Front Brake Master Cylinder
  Right Handlebar Switch Housing
  Throttle Grip
  Handlebar Holder Bolts [A]
- Remove the handlebar [B] from the stem head.

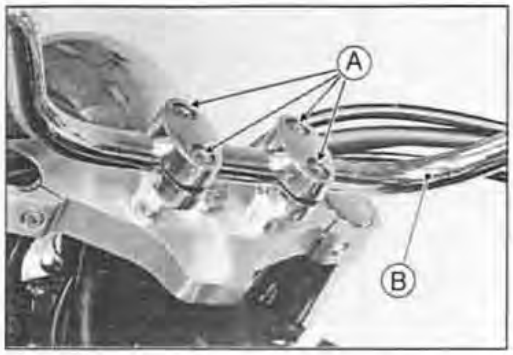

Handlebar Installation

- Set the handlebar to match its punched mark [A] to the lower mating face [B] of the clamp rear part.

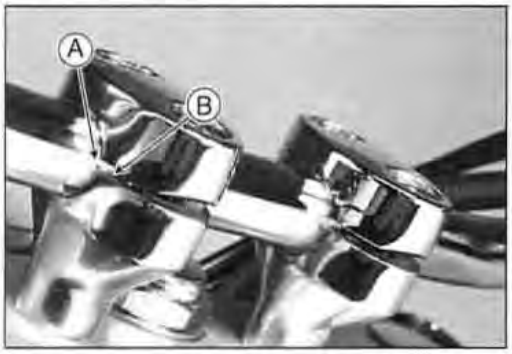

- Tighten the front clamp bolts first, and then the rear clamp bolts. There will be a gap [A] at the rear part of the clamp after tightening.

Torque - Handlebar Clamp Bolts: 34 N·m (3.5 kg·m, 25 ft·lb)



- The front half of the right switch housing [A] has a small projection [B]. Fit the projection into the small hole [C] in the handlebar.

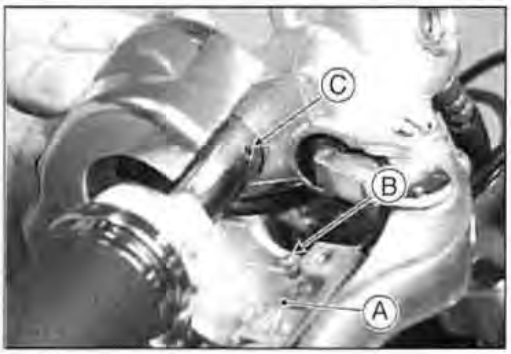

- Set the left switch housing [A] to match its mating surface [B] to the punched mark [C] of the handlebar.
- Install the handlebar switch housings.

Torque - Handlebar Switch Housing Screws: 3.4 N·m (0.35 kg·m, 30 in·lb)

- Install:
  Clutch Master Cylinder (see Clutch chapter)
  Front Master Cylinder (see Brakes chapter)
- Check and adjust the rear view mirrors.

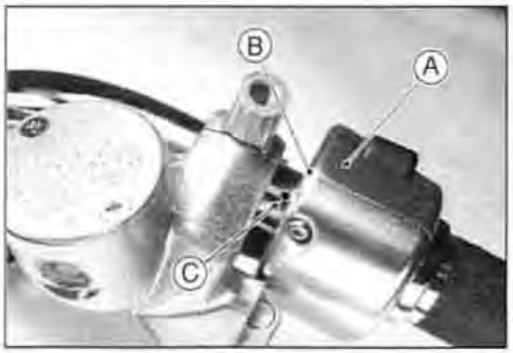

Steering

Check

● Check steering as follows.

○ Use the jack [A], the attachment jack [B], and a commercially available jack [C] to lift the front wheel off the ground.

Special Tools - Jack: 57001-1238
Attachment Jack: 57001-1398

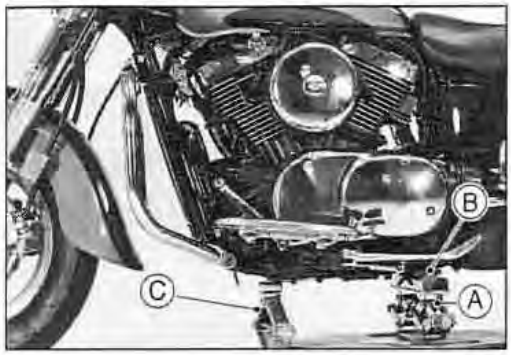

○ With the front wheel pointing straight ahead, alternately tap each end of the handlebar. The front wheel should swing fully right and left from the force of gravity until the fork hits the stop.

★ If the wheel binds or catches before the stop, the steering is too tight.

○ Feel for steering looseness by pushing and pulling [A] the fork.

★ If you feel looseness, the steering is too loose.



NOTE

○ *The cables and wiring will have some effect on the motion of the fork which must be taken into account. Be sure the wires and cables are properly routed.*

○ *The bearings must be in good condition and properly lubricated in order for any test to be valid.*

Adjustment

★ Adjust the steering if necessary.

● Remove:
Windshield (see Frame chapter)

● Remove the right and left windshield brackets [A] by removing four bolts [B].

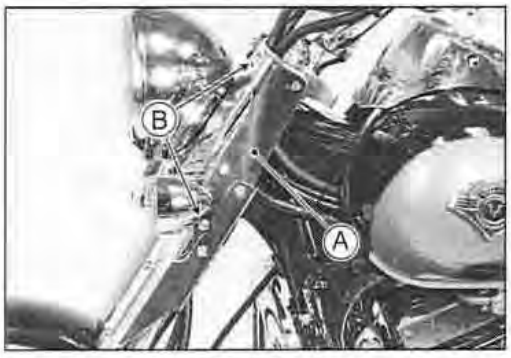

● Remove:
Fuel Tank (see Fuel System chapter)
Handlebar [A]

● Remove the cable holder [B] by unscrewing two bolts [C].

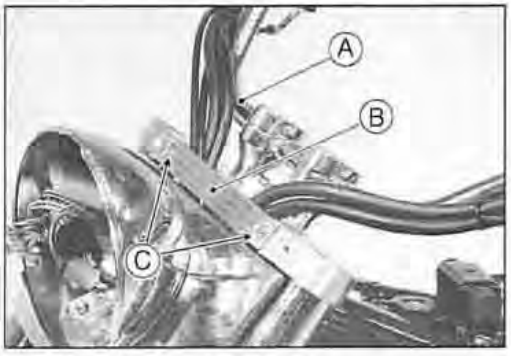

● Remove:
Stem Head Nut [A]
Washer [B]

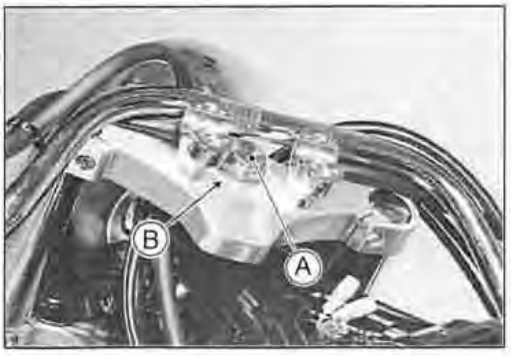

Steering

- Remove:
  O-ring [A]
  Upper Clamp Bolts [B]
  Steering Stem Head [C]

NOTE

Be sure to remove the O-ring for removal of the steering stem head.

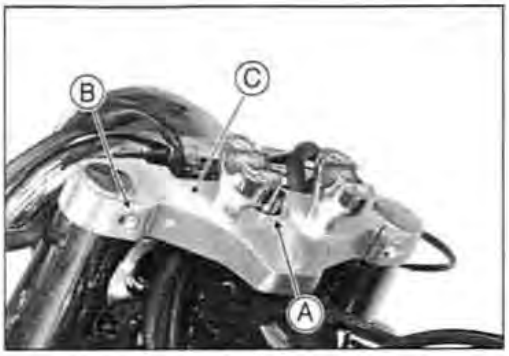

- Adjust the stem nut [A] with the stem nut wrench by tightening to the specified torque.

Special Tool - Steering Stem Nut Wrench: 57001-1100 [B]

Torque - Steering Stem Nut: 20 N·m (2.0 kg·m, 14.5 ft·lb)

90°C [C]
Force of 110 N (11.1 kg, 24.5 lb) [D]

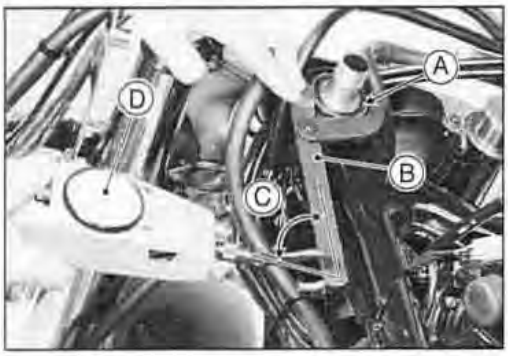

- Install the steering stem head [A].
- Install:
  Fork Top Caps [B]
  O-ring
  Washer [C]
  Stem Head Nut [D]
- Tighten:

Torque - Upper Fork Clamp Bolts: 20 N·m (2.0 kg·m, 14.5 ft·lb)
Stem Head Nut: 88 N·m (9.0 kg·m, 65 ft·lb)

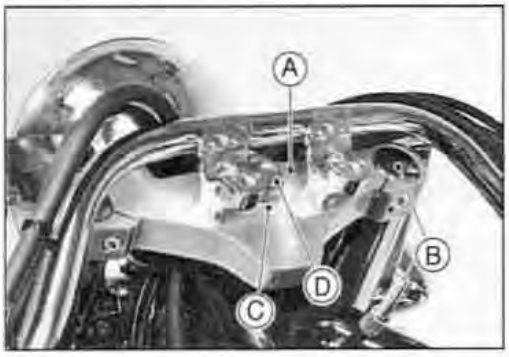

- Install the cable holder [A] and the windshield brackets [B].
- Run the throttle cables [C], brake hose [D], and clutch hose [E] as shown.
- Do not clamp the throttle cables with the strap [F].
- Install the removed parts.
  Handlebar (see this chapter)
  Fuel Tank (see Fuel System chapter)
  Windshield

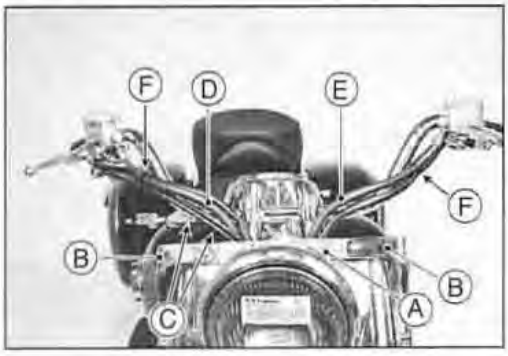

- Check and adjust the following items after installation.
  Steering
  Throttle Cables (see Fuel System chapter)
- Check the front brake effectiveness.

⚠ WARNING

Do not attempt to ride the motorcycle until a full brake lever is obtained by pumping the brake lever until the pads are against the disc. The brakes will not function on the first application of the lever if this is not done.

Steering Stem

Removal

- Remove the steering stem head [A] (see Steering Adjustment).

NOTE

○ *Be sure to remove the O-ring [B] for removal of the steering stem head.*

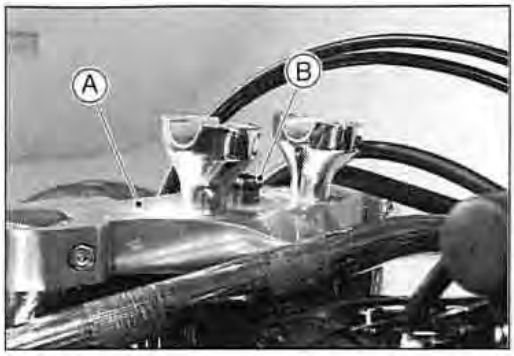

- Unscrew the headlight rim screws and open the headlight unit (see Electrical System chapter).
- Pull off the connectors [A] and pull them out of the headlight body.



- Remove the two bolts [A] and take off the turn signal light holder [B].



- Remove the bolts [A] and take off the headlight body [B].

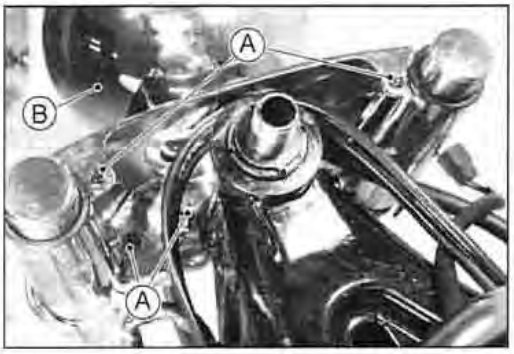

- Remove the brake joint bolts [A].
- Remove:
  Front Wheel (see Wheels/Tires chapter)
  Front Fender

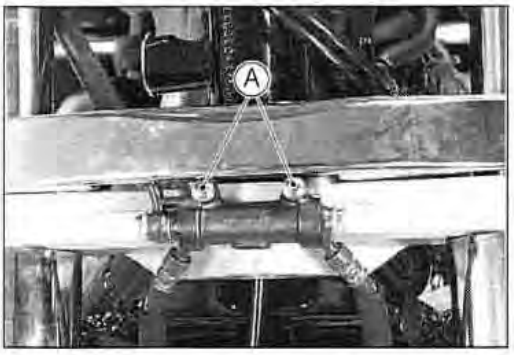

Steering Stem

- Remove the upper fork covers [A].

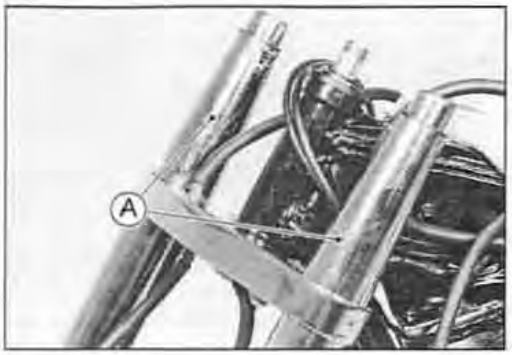

- Loosen the lower fork clamp bolts and remove the front fork (see Suspension chapter).
- Remove:
  Claw Washer [A]
  Steering Stem Nut [B]
  Stem Cap [C]
  O-ring

NOTE

Be sure to remove the O-ring for removal of the steering stem.

- Remove the steering stem [D].

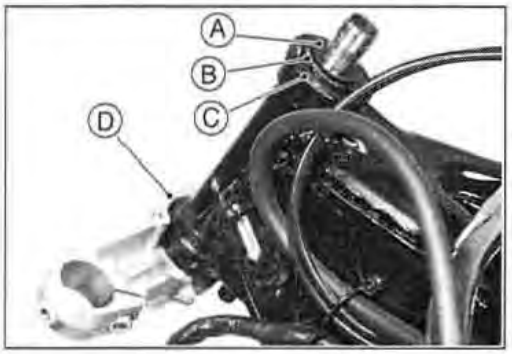

Installation

- Install:
  Steering Stem [A]
  Bearings [B]
  O-ring [C]
  Stem Cap [D]
  Stem Nut

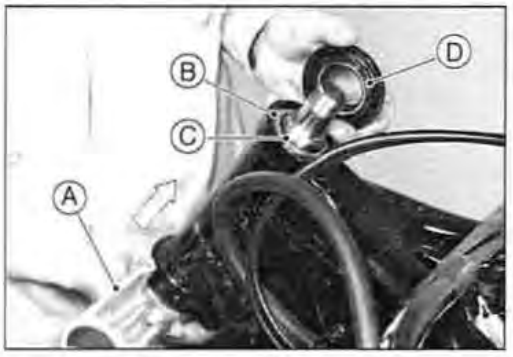

- Adjust the steering with the stem nut wrench (see Steering Adjustment).
- Install the claw washer.
- Temporarily install the front fork [A] and tighten the lower fork clamp bolts [B].

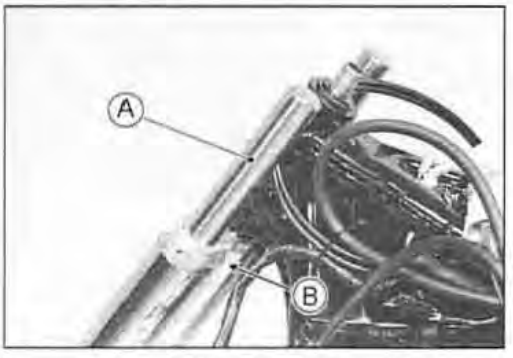

- Install the brake joint [A] and the turn signal light holder.

Torque - Brake Joint Bolts, Turn Signal Light Holder Bolts: 7.4 N·m (0.75 kg·m, 65 in·lb)



Steering Stem

- Install:
  Lower Fork Cover [A]
  Upper Fork Covers [B]

Apply soap and water solution to the rubber dampers and install the upper fork covers.

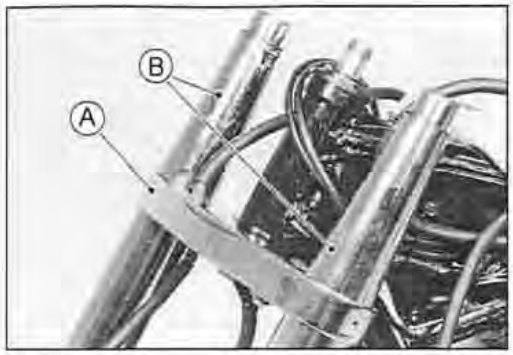

- Install the headlight body [A], four well nuts [B], and clamp [C].
- Join the connectors in the headlight body and install the headlight unit.

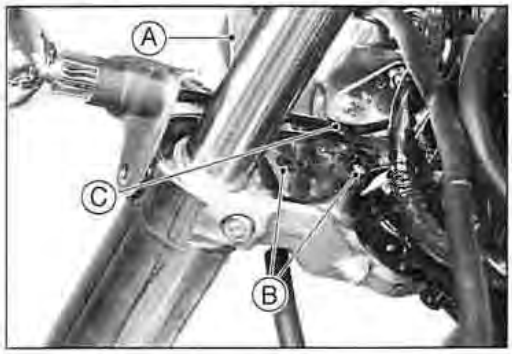

- Tighten the lower and upper fork cover bolts [A].

Torque - Upper Fork Cove Bolts (φ5): 4.4 N·m (0.45 kg·m, 39 in·lb)
Headlight Cover Bolts (φ6): 7.4 N·m (0.75 kg·m, 65 in·lb)

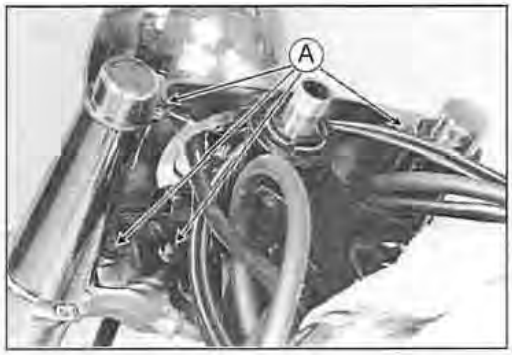

- Install the steering stem head and front fork.

Adjust the fork position so that the top end of the inner tube is **0 ~ 0.5 mm** lower than the upper surface of the steering stem head.

Torque - Lower Fork Clamp Bolts: 34 N·m (3.5 kg·m, 25 ft·lb)

- Install the removed parts.
  Front Wheel (see Wheels/Tires chapter)
  Handlebar (see this chapter)
  Fuel Tank (see Fuel System chapter)
  Windshield

- Check and adjust the following items after installation.
  Steering
  Throttle Cables (see Fuel System chapter)
  Choke Cable
  Headlight Aim
- Check the front brake effectiveness.

⚠ WARNING

Do not attempt to ride the motorcycle until a full brake lever is obtained by pumping the brake lever until the pads are against the disc. The brakes will not function on the first application of the lever if this is not done.

Steering Stem

Steering Stem Warp

- Whenever the steering stem is removed, or if the steering cannot be adjusted for smooth action, check the steering stem for straightness.

★ If the steering stem [A] is bent, replace the steering stem.

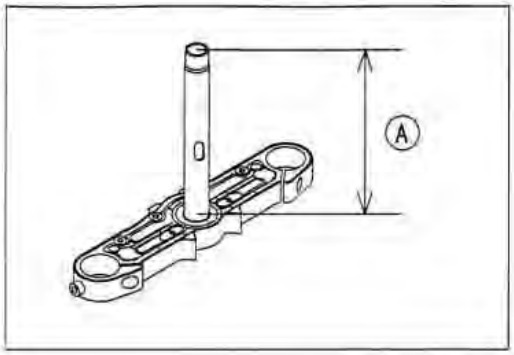

Steering Stem Bearing

Stem Bearing Removal

- Remove the steering stem (see this chapter).
- Drive out the bearing outer races from the head pipe.

Special Tool - Head Pipe Outer Race Remover: 57001-1107 [A]

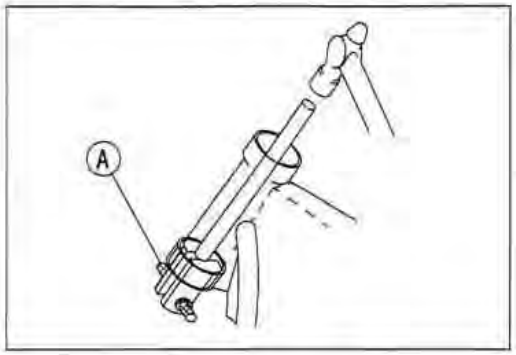

NOTE

If either steering stem bearing is damaged, it is recommended that both the upper and lower bearings (including outer races) be replaced with new ones.

- Remove the lower inner race [A] which is pressed onto the steering stem, using a chisel.

Grease Seal [B]
Tap here [C]

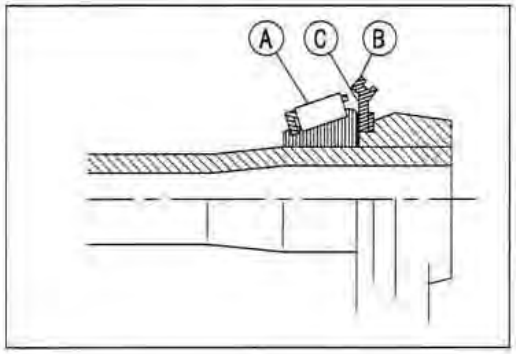

Stem Bearing Installation

- Replace the bearing outer races with new ones.
- Apply grease to the outer races, and drive them into the head pipe at the same time.

Special Tools - Head Pipe Outer Race Press Shaft: 57001-1075 [A]
Head Pipe Outer Race Drivers: 57001-1077 [B]

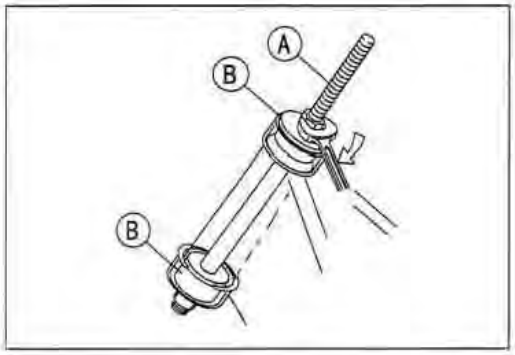

- Replace the stem bearing inner races with new ones.
- Apply grease to the lower inner race, and drive it onto the stem.

Special Tools - Steering Stem Bearing Driver: 57001-1344 [A]
Steering Stem Bearing Driver Adapter: 57001-1345 [B]

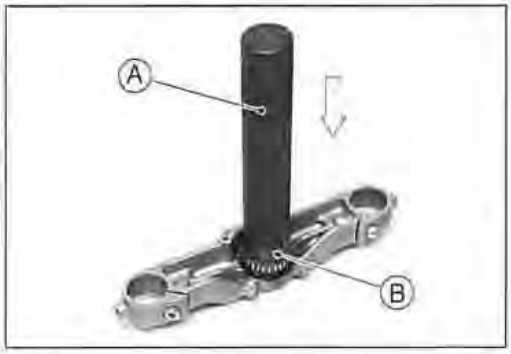

- Install the steering stem.

NOTE

Do not install the O-rings yet.

- Settle the bearings in place as follows:

Tighten the stem nut to **78 N·m (8.0 kg·m, 58 ft·lb)** of torque. (To tighten the steering stem nut to the specified torque, hook the wrench on the stem nut, and pull the wrench at the hole by **440 N (45 kg, 99 lb)** force in the direction shown.)

Special Tool - Steering Stem Nut Wrench: 57001-1100 [A]

180 mm [B]
Force [C]

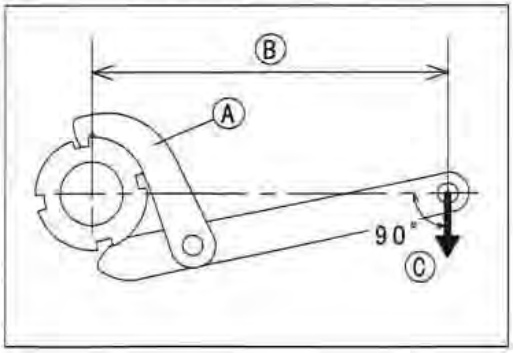

Steering Stem Bearing

○ Check that there is no play and the steering stem turns smoothly without rattles. If not, the steering stem bearings may be damaged.
- Remove the stem nut.
- Install the O-rings and adjust the steering (see Steering Adjustment).

Torque - Steering Stem Nut: 20 N·m (2.0 kg·m, 14.5 ft·lb)

Stem Bearing Lubrication

In accordance with the Periodic Maintenance Chart, lubricate the steering stem bearings.
- Remove the steering stem.
- Using a high-flash point solvent, wash the upper and lower tapered roller bearing in the cages, and wipe the upper and lower outer races, which are press-fitted into the frame head pipe, clean of grease and dirt.
- Visually check the outer races and the rollers.

★ If the rollers or races are worn, or if either race is dented, replace both races and all the roller bearing as a set.
- Pack the upper and lower tapered roller bearings [A] in the cages with grease, and apply a light coat of grease to the upper and lower outer races.
- Install the steering stem, and adjust the steering.

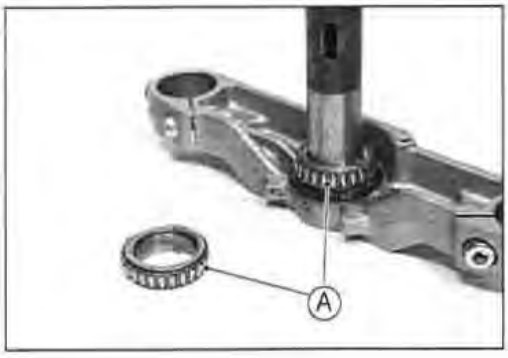

Stem Cap Deterioration, Damage

★ Replace the stem cap [A] if its grease seal shows damage.



Frame

Table of Contents

Exploded View 14-2
Specifications 14-8
Seats 14-9
  Front Seat Removal 14-9
  Front Seat Installation 14-9
  Rear Seat Removal 14-9
  Rear Seat Installation 14-9
Windshield 14-10
  Height Adjustment 14-10
  Removal 14-10
  Assembly/Installation 14-10
  Deflector Installation 14-11
Saddlebags 14-12
  Unlatching 14-12
  Latching 14-12
  Removal 14-12
  Installation 14-12
Guards 14-14
  Front Guard Removal/Installation 14-14
  Rear Guard Removal 14-14
Side Covers 14-15
  Left Side Cover Removal 14-15
  Left Side Cover Installation 14-15
  Right Side Cover Removal 14-15
  Right Side Cover Installation 14-16
Fenders 14-17
  Front Fender Removal 14-17
  Rear Fender Removal 14-17
Battery Case 14-18
  Battery Case Removal 14-18
Downtube 14-19
  Removal 14-19
  Installation 14-19
Front Footpeg 14-20
  Removal 14-20
  Disassembly 14-20
Frame 14-21
  Frame Inspection 14-21

Exploded View

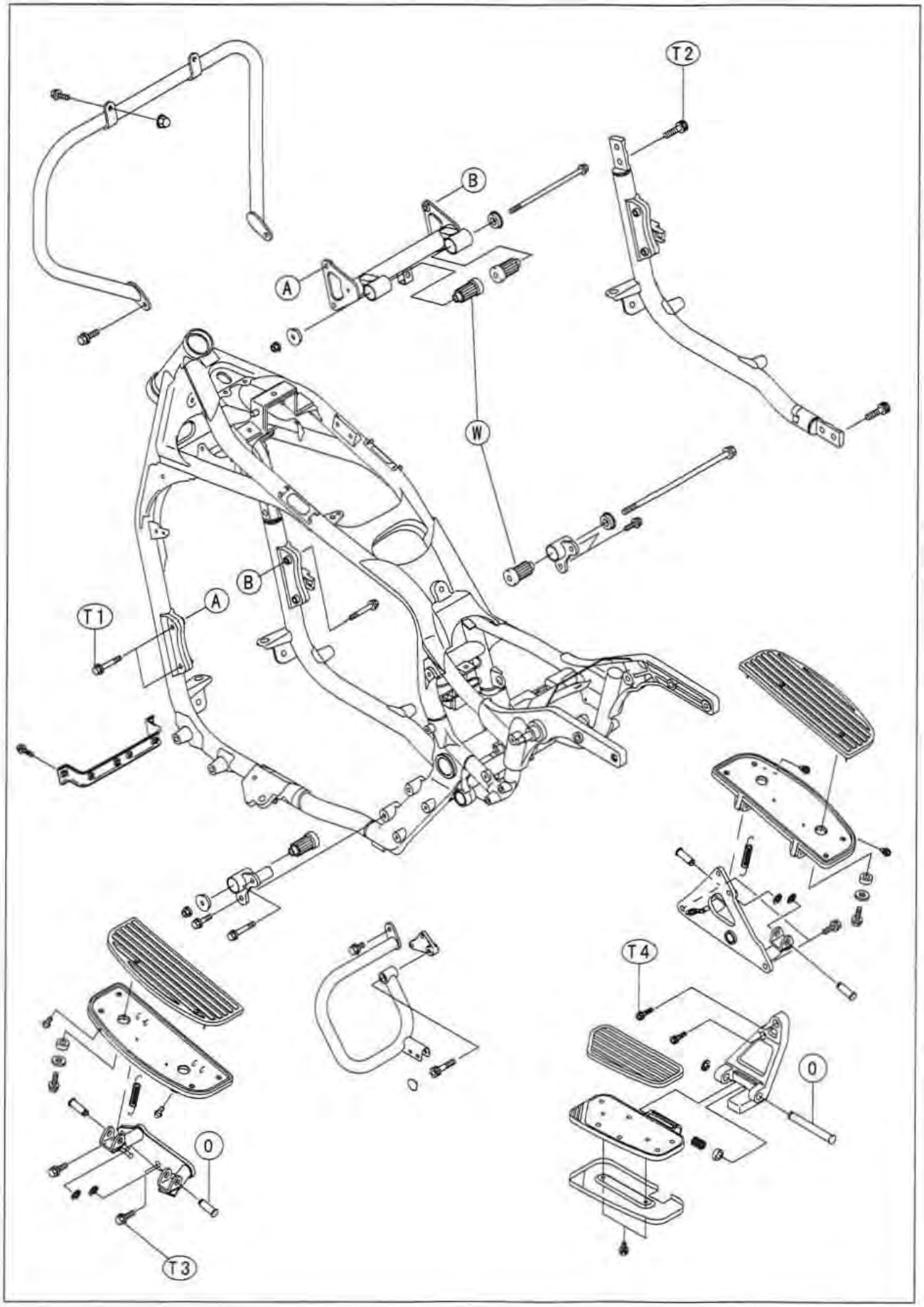

Exploded View

G: Apply grease.
W: Apply soap and water solution.
T1: 23 N·m (2.3 kg·m, 16.5 in·lb)
T2: 44 N·m (4.5 kg·m, 33 ft·lb)
T3: 34 N·m (3.5 kg·m, 25 ft·lb)
T4: 20 N·m (2.0 kg·m, 14.5 ft·lb)

Exploded View

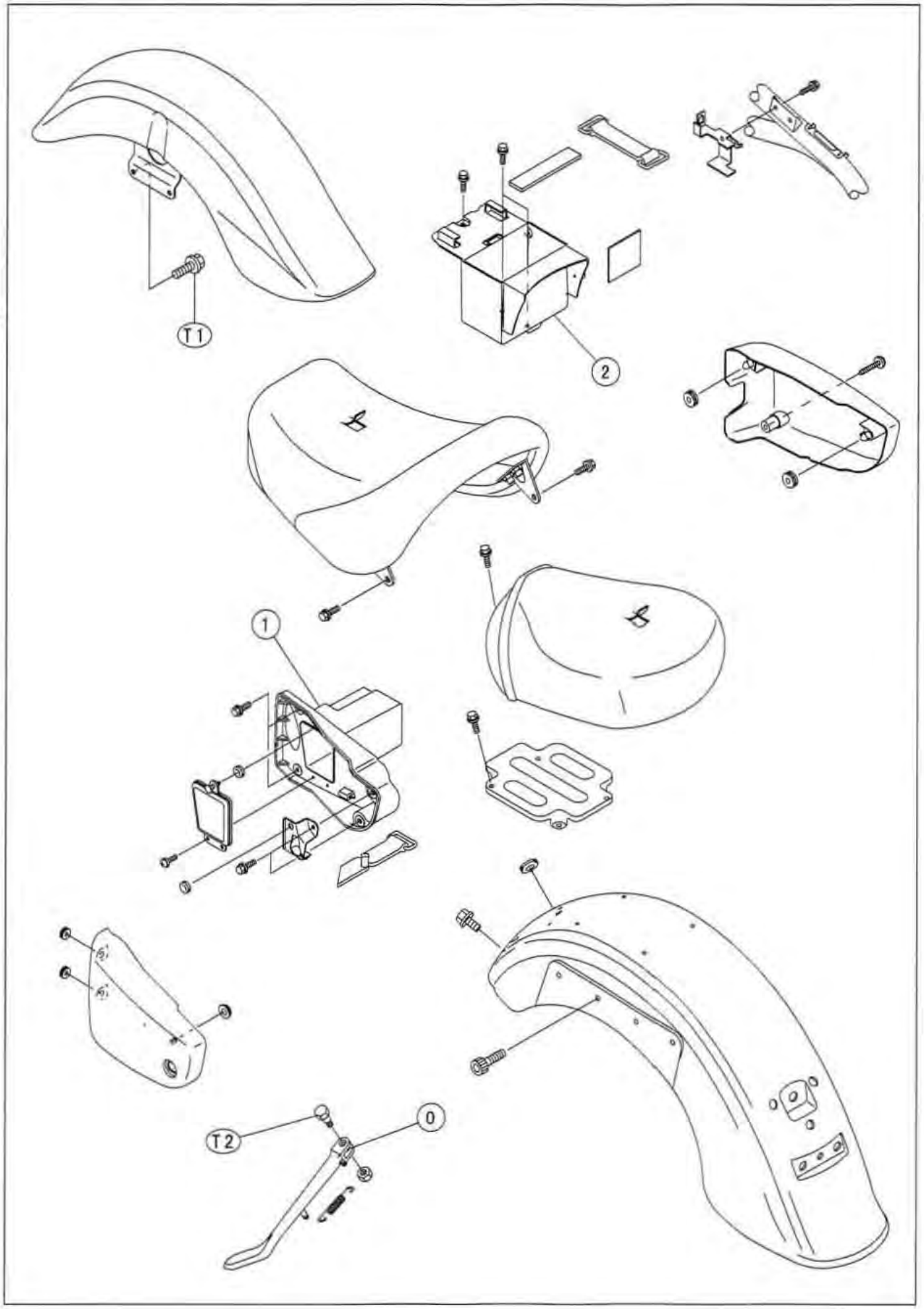

Exploded View

1. Tool Box
2. Battery Case

G: Apply grease.
T1: 6.9 N·m (0.70 kg·m, 61 in·lb)
T2: 44 N·m (4.5 kg·m, 33 ft·lb)

Exploded View

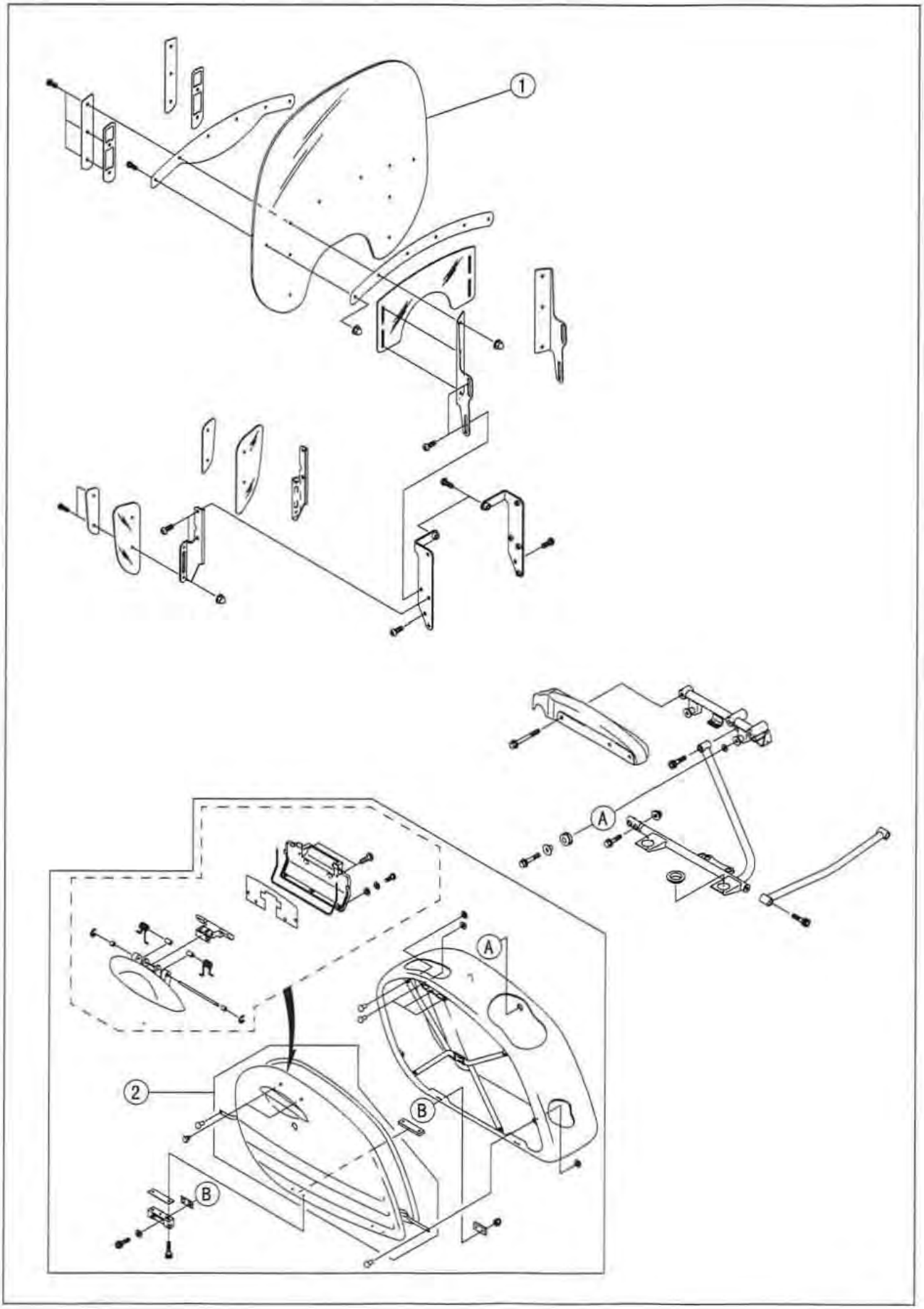

Exploded View

1. Windshield
2. Saddlebags

Specifications

Special Tools - Jack: 57001-1238
Attachment Jack: 57001-1398

Seats

Front Seat Removal

- Remove the seat bolts [A] on both sides.
- Pull the front seat [B] forward and remove it.

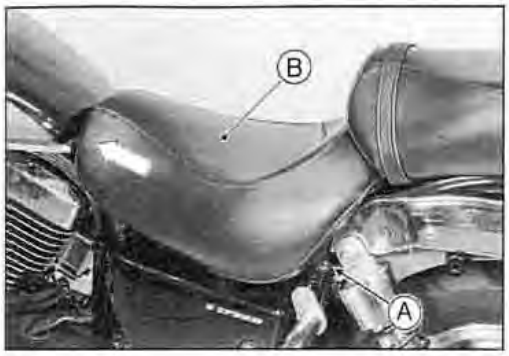

Front Seat Installation

- Insert the rear part [A] of the seat under the rear seat, then slip the seat hook [B] under the washer [C].
- Tighten the seat bolts.

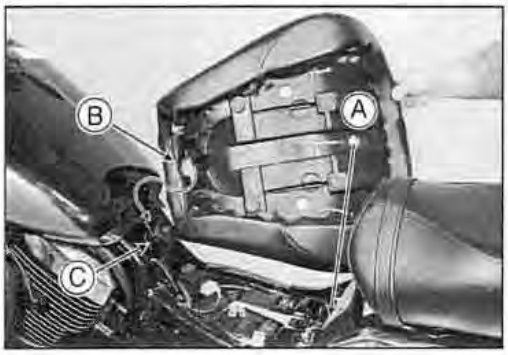

Rear Seat Removal

- Remove the front seat (see this chapter).
- Remove the seat bolt [A] and move the rear seat forward [B] and remove it.

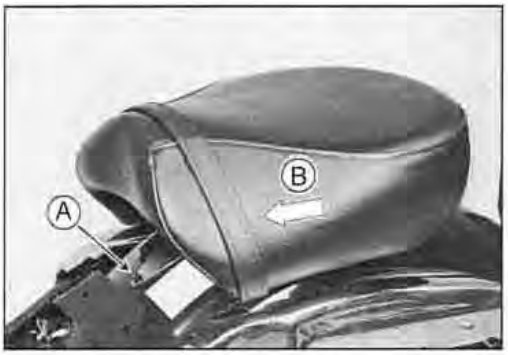

Rear Seat Installation

- Slip the hooks [A] of the rear seat into the grooves [B] of the seat bracket.

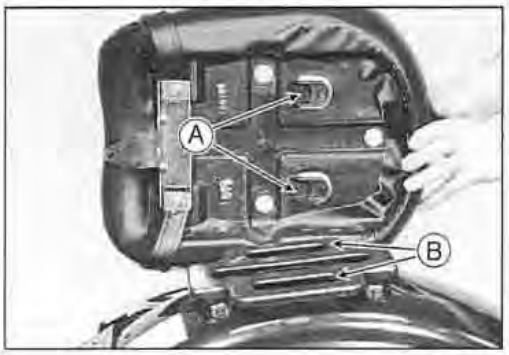

Windshield

Height Adjustment

○ The windshield [A] can be adjusted within 45 mm in height (The sliding range is within 50 mm) to suit the rider's preference.

- Loosen the upper and lower bolts [B] on both sides and slide the windshield up or down.
- Check to see that the position marks [C] are in the same relative position on both sides.
- Tighten the bolts securely.

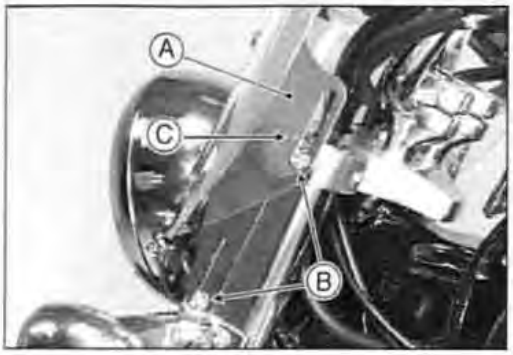

- Loosen the subwindshield bolts [A] on both sides and slide the subwindshield up or down so the clearance [B] is 10 mm between the subwindshield lower edge and the headlight body.
- Tighten the subwindshield bolts.

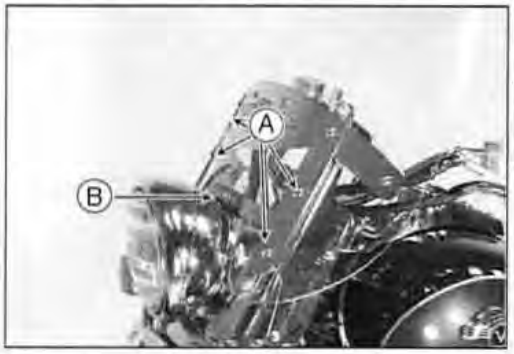

Removal

CAUTION
Be careful not to damage the surface of the windshield.

- Remove the upper and lower bolts [A] on both sides and remove the windshield [B].

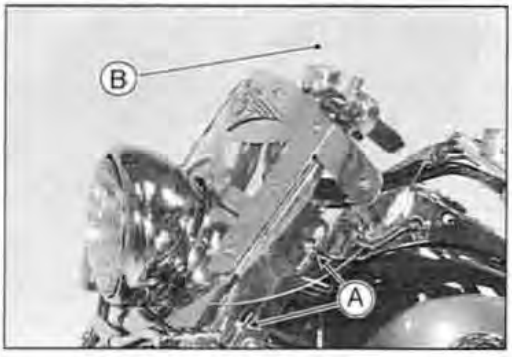

Assembly/Installation

CAUTION
Be careful not to damage the surface of the windshield.

- Install each outer plate (large) [A] and each stay [B] on the windshield with the socket bolts (○6 × L 20 mm) [C] and the cap nuts.

○ The left outer plate has an **L** mark on its back and the right outer plate an **R** mark.

- Tighten the bolts in the order shown.

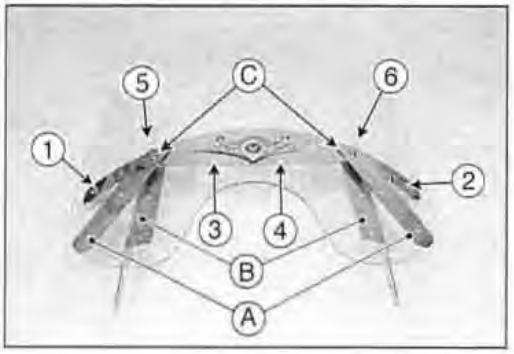

- Insert the subwindshield [A] between the windshield [B] and the stays [C].

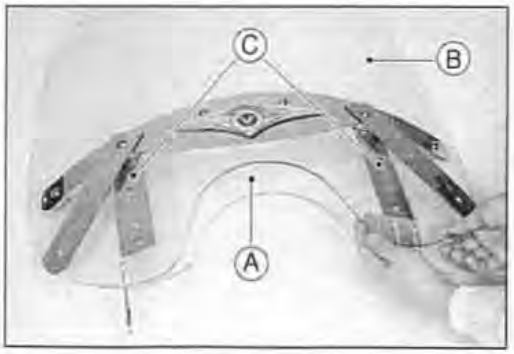

Windshield

- Install each outer plate (small) [A] between the windshield [B] and each outer plate [C] (large).
- First, tighten all the socket bolts (⌀6 × L 20 mm) and cap nuts to a snug fit and finally tighten them evenly.
- Pull the subwindshield all the way up.

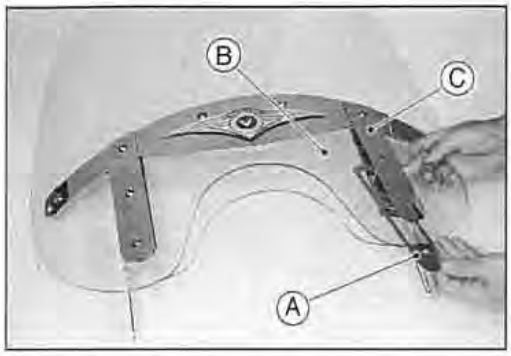

- Install the windshield assy [A] on the brackets with the socket bolts (⌀8 × L 16 mm).
- Set the windshield all the way down and tighten the bolts [B] securely.

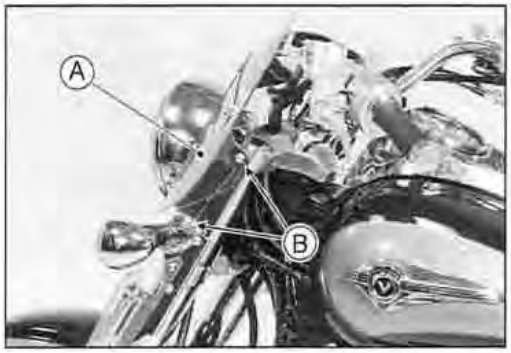

Deflector Installation

- Assemble the following with the socket bolts and cap nuts [A].
  Right Stay [B]
  Left Stay [C]
  Deflectors [D]
  Right Deflector Bracket [E]
  Left Deflector Bracket [F]

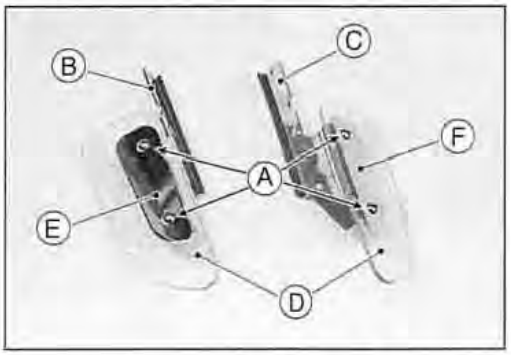

- Install each deflector [A] on the windshield bracket.
- Tighten the socket bolts [B] (⌀8 × L 16 mm).

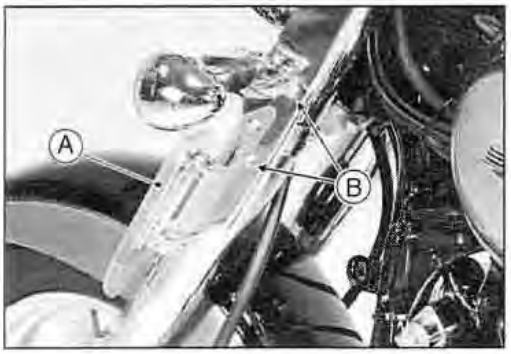

Saddlebags

Unlatching

- Insert the ignition key into the lid lock [A], turn the key counterclockwise [B], and pull the knob [C] outward.

Front [D]

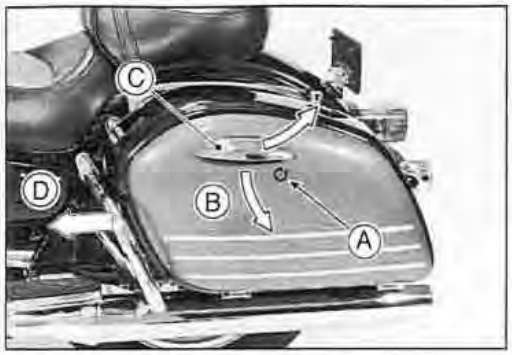

Latching

- Hold the knob [A] up while closing the lid [B], release the knob when the lid is fully closed and then turn the key clockwise [C].
- Pull the knob to make sure the lid is locked.



CAUTION

The lid will not latch if the operator tries to "slam" it shut, and could be damaged.

Removal

- Open the lid [A].
- Unscrew the bag bolts [B].
- Close the lid.
- Lift the saddlebag [C] to clear the stopper, and remove it.



Installation

- Fit the stoppers on the bottom of the saddlebag into the dampers [A] in the bag stay, and fit the hook [B] behind the bag [C] into the catch [D] on the top stay. At this point, the bag is free to move on the mounts.

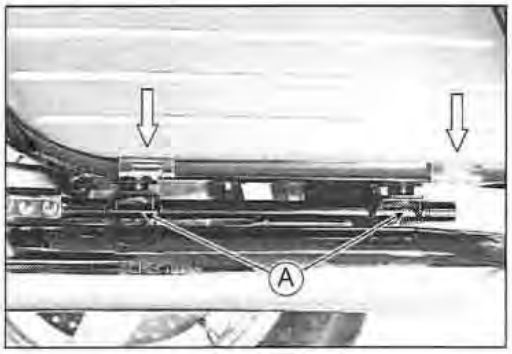

Saddlebags

- Open the lid and tighten the bag bolts.

NOTE

If the lid does not work properly, adjust the bag clearance to mount the bag snugly without being distorted.

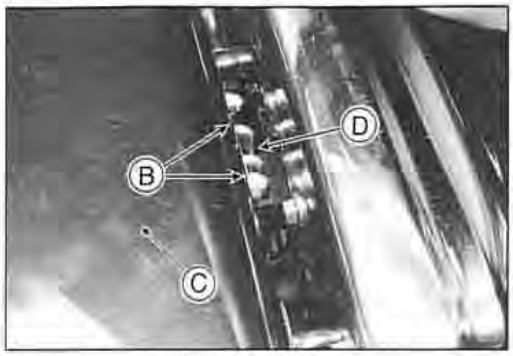

- Lightly push the bag [A] against the top stay [B].
- ★ If both bosses [C] fit against the dampers [D] of the bag with less than 1.0 mm clearance [E] and without bending or distorting the bag to fit, the bolts may be inserted and tightened securely.
- ★ If one mounting boss has more than 1.1 mm clearance when the other has none, the bag must be shimmed. Insert the washer(s) [F] to take up the clearance, and then install the bolts [G] and tighten them securely.
- After the saddlebag is installed, open and close the lid several times to check for smooth operation. Be sure it latches and locks securely. If it does not work properly, remove the bolts and readjust the clearance.

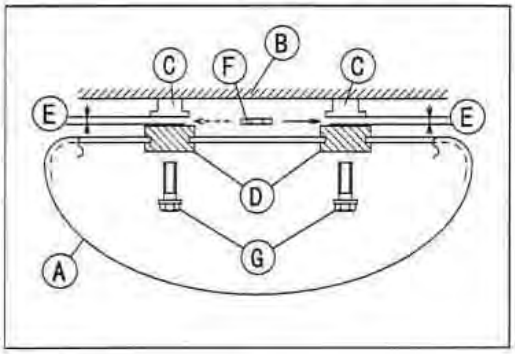

Guards

Front Guard Removal/Installation

- Remove:
  Front Footpeg Bolts [A]
  Upper Bracket Bolts and Nuts [B]
- Remove the front guard [C].

Torque - Front Footpeg Bolts: 34 N·m (3.5 kg·m, 25 ft·lb)

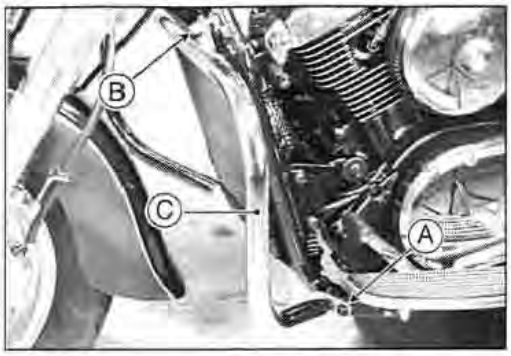

Rear Guard Removal

- Remove the saddlebag (see this chapter).
- Remove:
  Upper Bolt [A]
  Middle Bolt [B]
  Lower Bolts [C]
- Remove the rear guard [D].

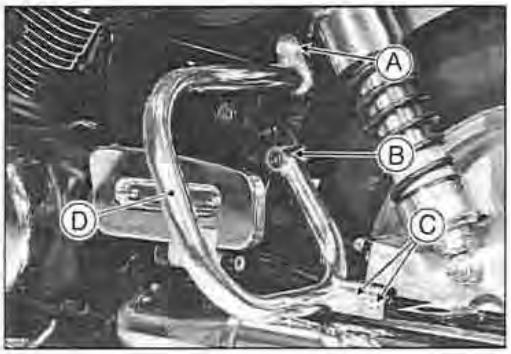

Side Covers

Left Side Cover Removal

- Insert the ignition switch key into the side cover, and turn the key [A] clockwise.

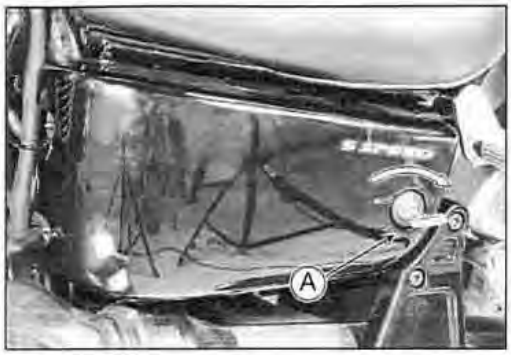

- Swing open [B] the rear part of the left side cover, push [A] the left side cover slightly forward, and remove it.

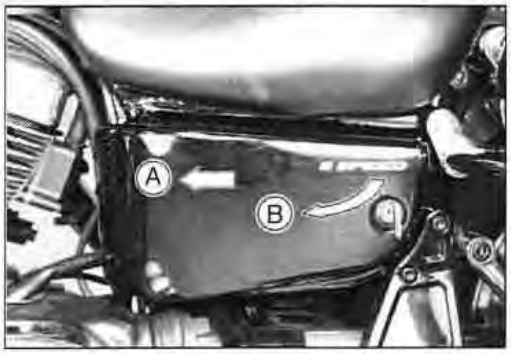

Left Side Cover Installation

- Put the front stoppers [A] into the grommets first, then put the rear stopper into the grommet.

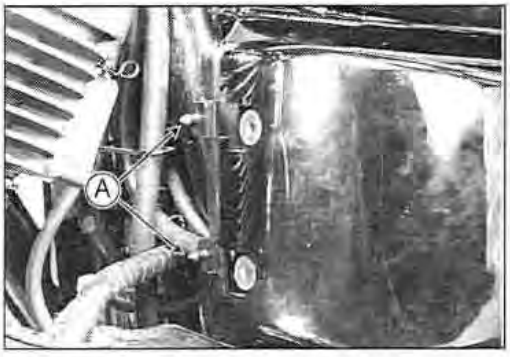

- Turn the ignition switch key [A] counterclockwise to secure the left side cover.



Right Side Cover Removal

- Remove the screw [A].

CAUTION

Be careful not to scratch the right side cover surface with the rear exhaust pipe [B] during removal or installation.

- Cover the rear exhaust pipe with a towel and pull the right side cover evenly outward to clear the stoppers.
- Remove the right side cover.

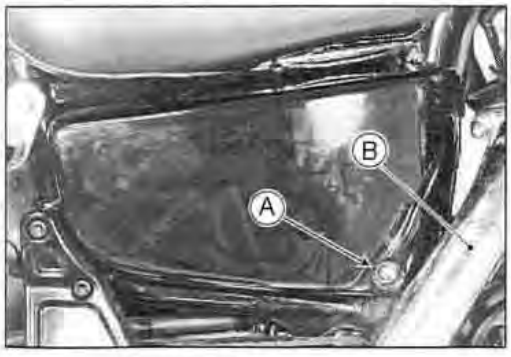

Side Covers

Right Side Cover Installation

- Run the reserve tank hose [A] and the reserve tank overflow hose [B] as shown.

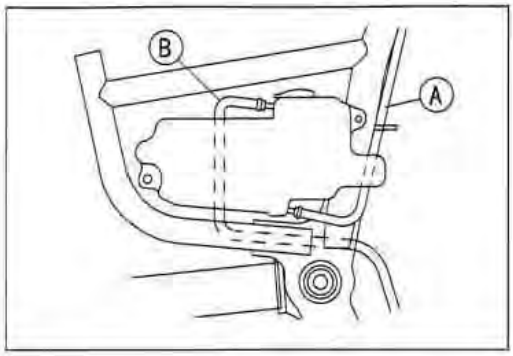

Fenders

Front Fender Removal



CAUTION

Be careful not to scratch the painted surface during removal or installation.

- Remove the mounting bolts [A] on both sides to separate the fender from the front fork.
- Move back the fender with the wheel installed and removed it.

Rear Fender Removal

CAUTION

Be careful not to scratch the painted surface during removal or installation.

- Remove the front and rear seats and saddlebags (see this chapter).
- Remove:
  Allen Bolts [A]
  Bolt and Nuts [B]
  Right and Left Saddlebag Stays [C]

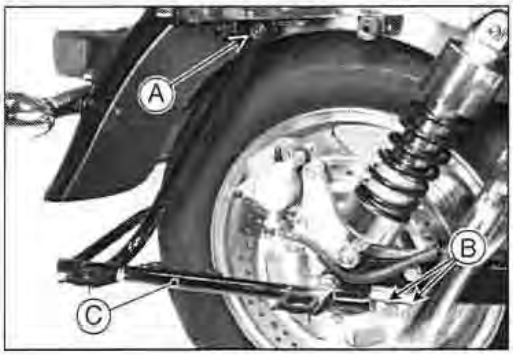

- Remove the fender cover [A] by unscrewing bolts [B].

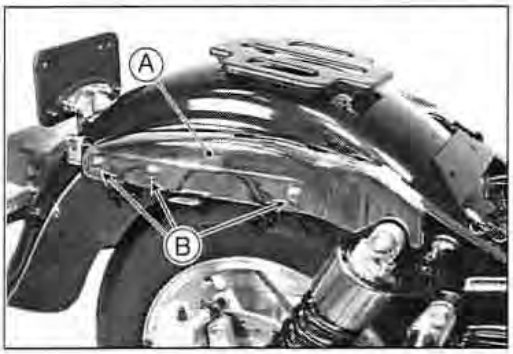

- Disconnect the rear turn signal and taillight wire connectors.
- Remove:
  Rear Fender Front Bolts [A]
  Rear Fender Allen Bolts [B]
- Remove the rear fender [C] rearward.

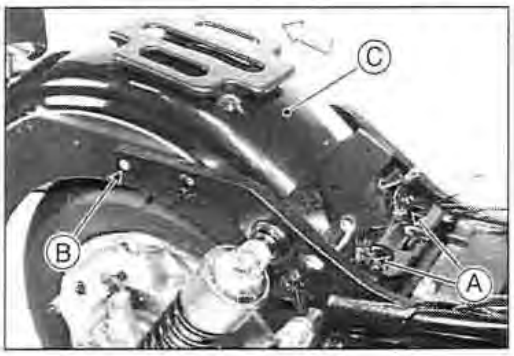

Battery Case

Battery Case Removal

- Remove:
  Front Seat (see this chapter)
  Side Covers (see this chapter)
  Battery (see Electrical System chapter)
- Remove (from the right side):
  Coolant Reserve Tank [A]
  IC igniter [B]
  Oil Pressure Warning Light Delay Unit [C]
  Starter Relay [D]

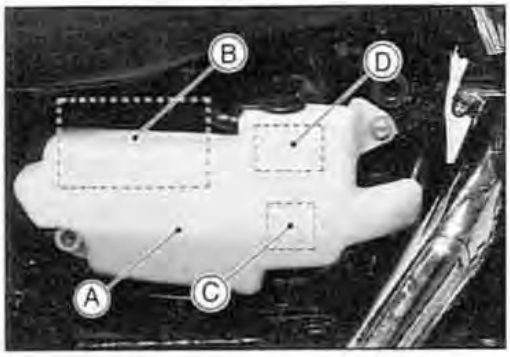

- Remove (from the left side):
  Canister (California)
- Unscrew the four bolts [A].

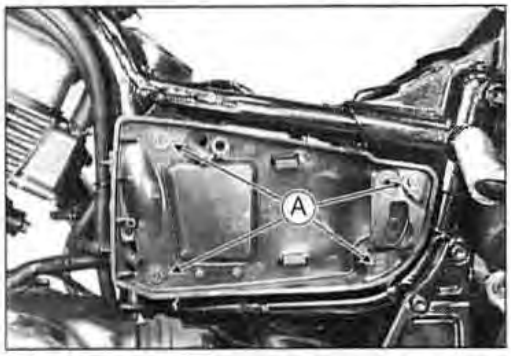

- Pull the tool box [A] out.

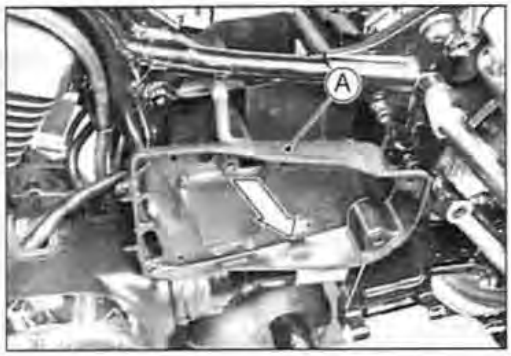

- Unscrew the three bolts [A].

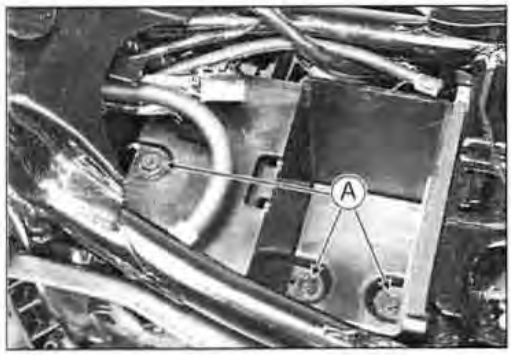

- Turn the battery case [A] clockwise and take it out from the left side
  Front [B]



Downtube

Removal

- Using the jack and the attachment jack, raise the rear wheel off the ground.

Special Tools - Jack: 57001-1238
Attachment Jack: 57001-1398

- Remove:
  Front Guard (see this chapter)
  Brake Reservoir Cover
  Brake Reservoir [A]



- Remove the fuel tank (see Fuel System chapter) and pull off the rear brake light switch connector [A].
- Remove the front exhaust pipe (see Engine Top End chapter).



- Remove the right front footpeg [A] by taking off the bolt [B].
- Support the engine with a commercially available stand [C].
- Remove:
  Right Regulator/Rectifier Bracket Bolt [D]
  Engine Mounting Bracket Bolts [E]

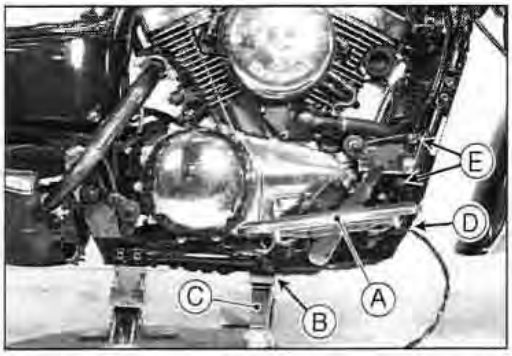

- Remove the downtube bolts [A] and take off the downtube [B].



Installation

- Run the brake hose [A] inside the downtube [B] and clamp it [C].
  Front [D]
- Tighten:

Torque - Downtube Bolts: 44 N·m (4.5 kg·m, 33 ft·lb)
Engine Mounting Bracket Bolts: 23 N·m (2.3 kg·m, 16.5 ft·lb)

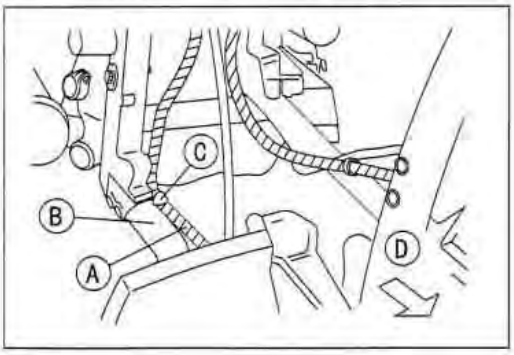

Front Footpeg

Removal

The left front footpeg is removed during shift pedal removal (see Crankshfaft/Transmission chapter).

The right front footpeg is removed during brake pedal removal (see Brakes chapter).

Disassembly

- Remove the front footpeg.
- Remove:
  Footpeg Spring [A]
  Circlips [B]
  Pins [C]

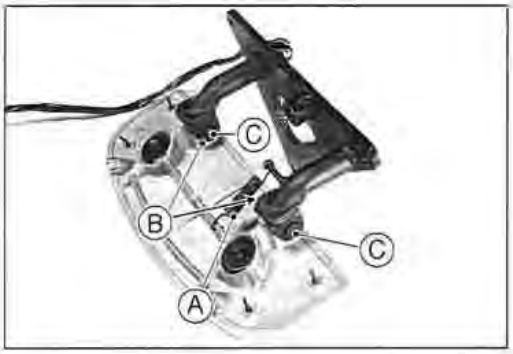

Frame

Frame Inspection

● Visually inspect the frame [A] for cracks, dents, bending, or warp.

★ If there is any damage to the frame, replace it.

⚠ WARNING

A repaired frame may fail in use, possibly causing an accident. If the frame is bent, dented, cracked, or warped, replace it.

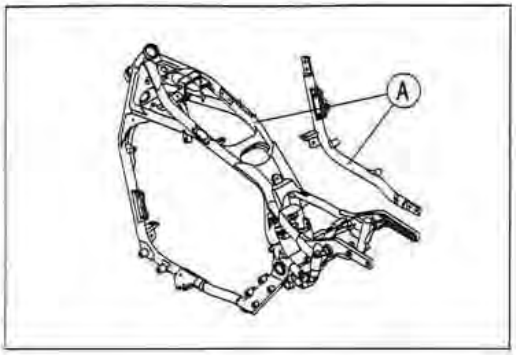

Electrical System

Table of Contents

Electrical Parts Location....15-3
Exploded View....15-4
Specifications....15-10
Servicing Precautions....15-12
Electrical Wiring....15-13
  Wiring Inspection....15-13
Battery....15-14
  Battery Removal/Installation....15-14
  Electrolyte Filling....15-14
  Initial Charge....15-15
  Precautions....15-16
  Interchange....15-16
  Charging Condition Inspection....15-17
  Refreshing Charge....15-17
Charging System....15-19
  Alternator Outer Cover Removal....15-19
  Alternator Outer Cover Installation....15-19
  Alternator Cover Removal....15-19
  Alternator Inner Cover Removal....15-19
  Alternator Rotor Removal....15-20
  Alternator Installation....15-20
  Alternator Outside Stator Removal....15-20
  Alternator Outside Stator Installation....15-20
  Alternator Inside Stator Removal....15-21
  Alternator Inside Stator Installation....15-21
  Charging Voltage Inspection....15-21
  Alternator Inspection....15-22
  Regulator/Rectifier Removal....15-23
  Rectifier Inspection....15-23
  Regulator Inspection....15-24
Ignition System....15-26
  Ignition Coil Removal....15-28
  Ignition Coil Installation....15-28
  Ignition Coil Inspection....15-28
  Spark Plug Removal....15-29
  Spark Plug Installation....15-29
  Spark Plug Cleaning/Inspection....15-30
  Spark Plug Gap Inspection....15-30
  Ignition Coil Primary Peak Voltage....15-30
  Ignition Timing Inspection....15-31
  Pickup Coil Removal....15-31
  Pickup Coil Installation....15-32
  Pickup Coil Inspection....15-32
  IC Igniter Inspection....15-33
Starter Motor....15-35
  Removal....15-35
  Installation....15-35
  Disassembly....15-36
  Assembly....15-37
  Brush Inspection....15-38
  Commutator Cleaning and Inspection....15-38
  Armature Inspection....15-39
  Brush Lead Inspection....15-39
  Brush Plate and Terminal Bolt Inspection....15-39
  Starter Relay Inspection....15-39
Lighting System....15-41
  Headlight Beam Horizontal Adjustment....15-41
  Headlight Beam Vertical Adjustment....15-41
  Headlight Bulb Replacement....15-41
  Headlight Body Removal....15-42
  Tail/Brake Light Bulb Replacement....15-43
Automatic Turn Signal Cancelling System....15-45
  Wiring Inspection....15-46
  Distance Sensor Inspection....15-46
  Turn Signal Switch Inspection....15-47
  Turn Signal Control Unit Inspection....15-47
  Turn Signal Light Bulb Replacement....15-47
Fuel Pump....15-49
  Removal/Installation....15-49
  Internal Resistance....15-49
  Operation Check....15-49
Radiator Fan System....15-51
  Fan System Circuit Inspection....15-51
  Fan Motor Inspection....15-51
Oil Pressure Warning System....15-52
  Oil Pressure Light Delay Unit Inspection....15-52
Meter, Gauge....15-54
  Meter Unit Removal....15-54
  Meter Unit Installation....15-54
  Meter Unit Disassembly....15-54
  Meter Unit Assembly....15-55
  Water Temperature Warning System Inspection....15-55
  Fuel Gauge Operation Inspection....15-56
Switch and Sensors....15-58
  Front Brake Light Switch Inspection (Periodic Inspection)....15-58
  Rear Brake Light Switch Adjustment (Periodic Inspection)....15-58
  Radiator Fan Switch Removal....15-58
  Radiator Fan Switch Installation....15-58
  Radiator Fan Switch Inspection....15-59

Water Temperature Switch Removal....15-59
Water Temperature Switch Installation....15-59
Water Temperature Switch Inspection....15-60
Fuel Level Sensor Inspection....15-60
Throttle Sensor Removal/Installation....15-60
Throttle Sensor Inspection....15-61
Throttle Sensor Position Adjustment....15-61
Junction Box....15-62
Junction Box Fuse Circuit Inspection....15-62
Starter Circuit/Headlight Relay Inspection....15-62
Diode Circuit Inspection....15-63
Fuse....15-65
Main Fuse Removal....15-65
Junction Box Fuse Removal....15-65
Fuse Installation....15-65
Fuse Inspection....15-65
VN1500-G1 Wiring Diagram (Canada, Malaysia, and U.S.)....15-66
VN1500-G1, H1 Wiring Diagram (Except for Australia, Canada, Malaysia, and U.S.)....15-68
VN1500-G1 Wiring Diagram (Australia)....15-70
VN1500-G3 Wiring Diagram (U.S.A. Model)....15-72

Electrical Parts Location

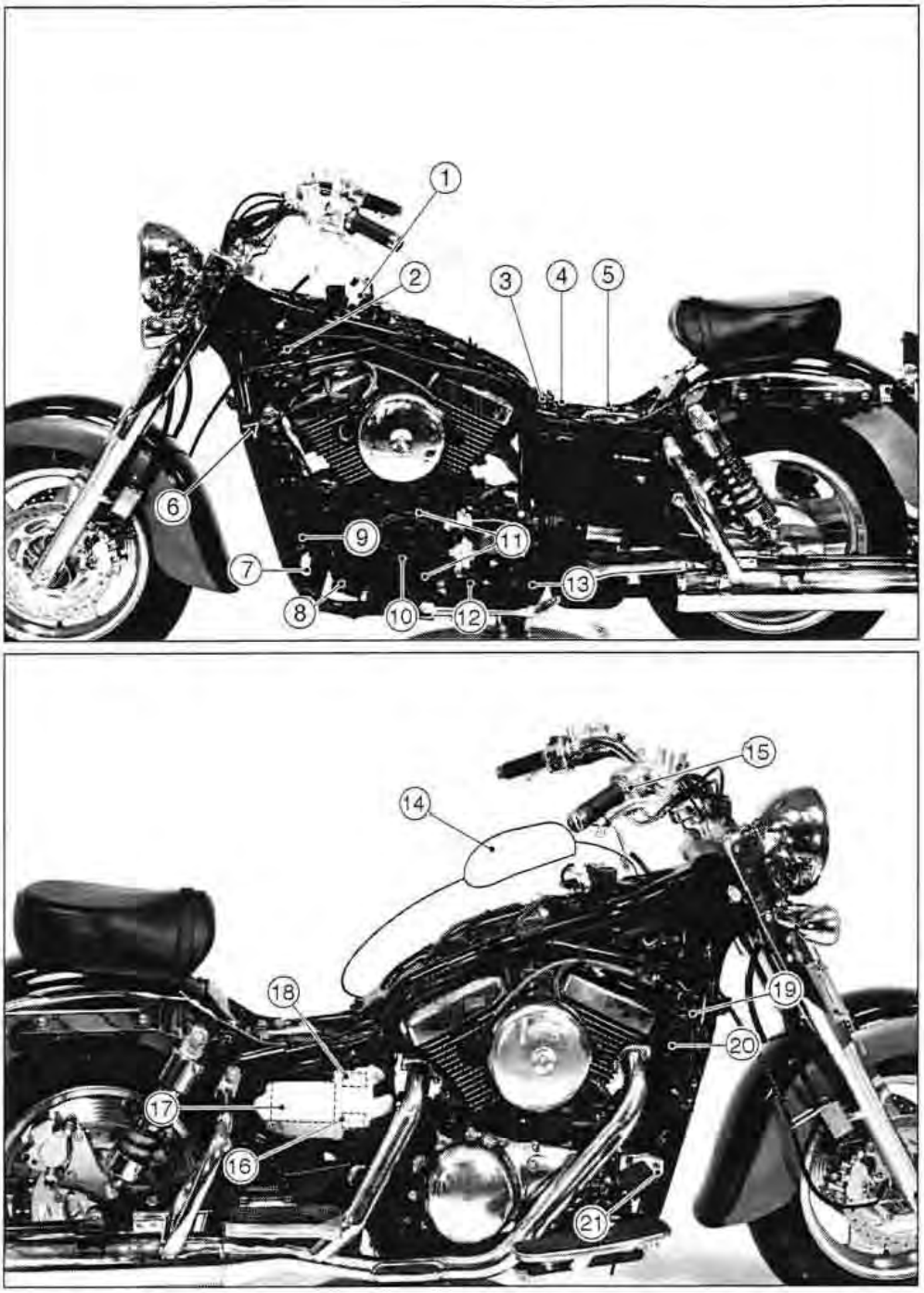

1. Fuel Pump
2. Ignition Coils
3. Turn Signal Control Unit
4. Junction Box
5. MF Battery
6. Ignition Switch
7. Regulator/Rectifiers
8. Starter Motor
9. Water Temperature Switch
10. Alternator
11. Pickup Coils
12. Neutral Switch
13. Oil Pressure Switch
14. Meter Unit
15. Front Brake Light Switch
16. Oil Pressure Light Delay Unit
17. IC Igniter
18. Starter Relay and Main Fuse
19. Horns
20. Radiator Fan
21. Radiator Fan Switch

Exploded View

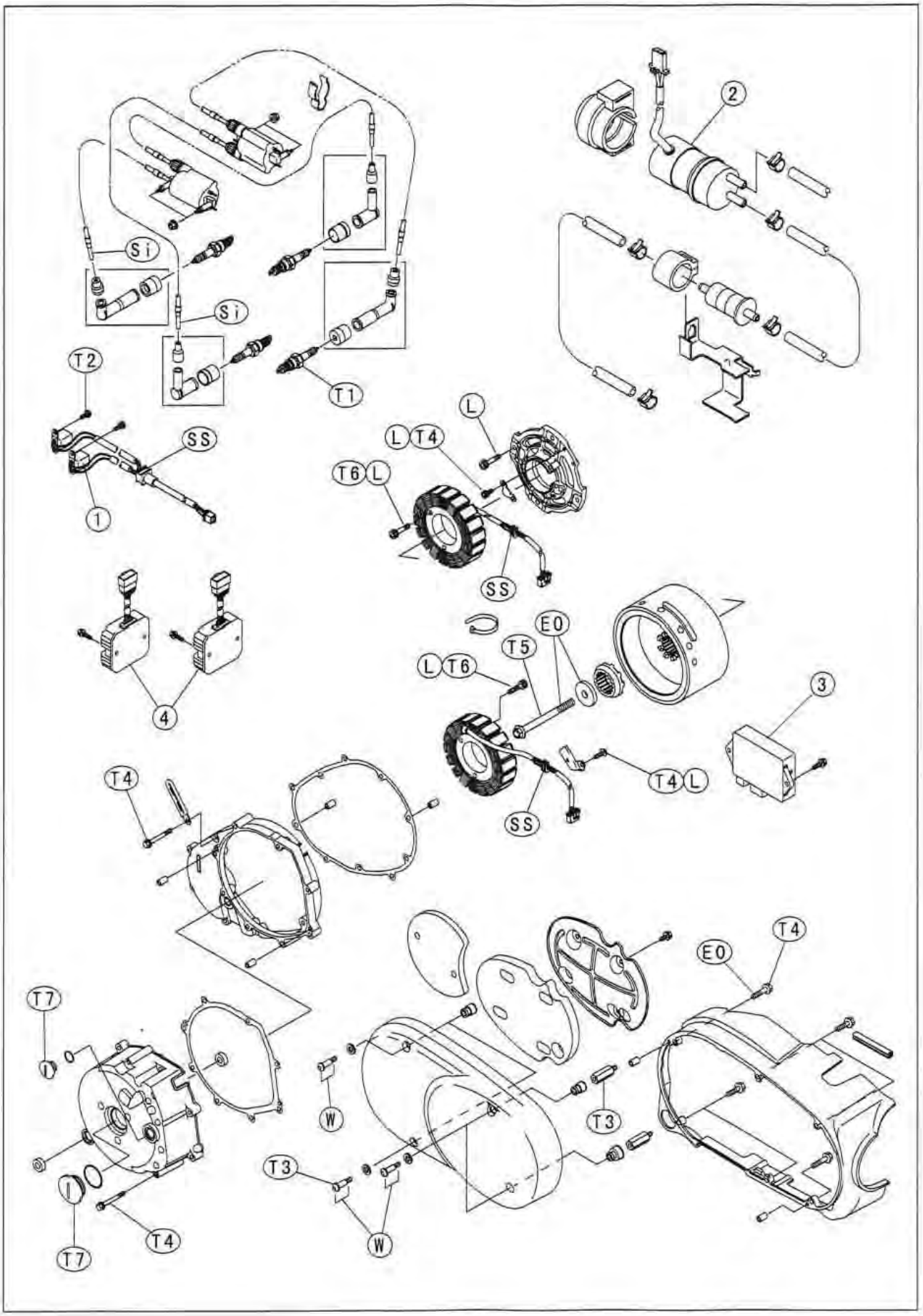

Exploded View

1. Pickup Coils
2. Electric Fuel Pump
3. IC Igniter
4. Regulator/Rectifiers

EO: Apply engine oil.
L: Apply a non-permanent locking agent.
W: Apply soap and water solution.
SS: Apply silicone sealant (Kawasaki Bond: 56019-120).
Si: Apply silicone grease.
T1: 18 N·m (1.8 kg·m, 13.0 ft·lb)
T2: 2.9 N·m (0.30 kg·m, 26 in·lb)
T3: 12 N·m (1.2 kg·m, 104 in·lb)
T4: 9.8 N·m (1.0 kg·m, 87 in·lb)
T5: 78 N·m (8.0 kg·m, 57 ft·lb)
T6: 13 N·m (1.3 kg·m, 113 in·lb)
T7: 1.5 N·m (0.15 kg·m, 13 in·lb)

Exploded View

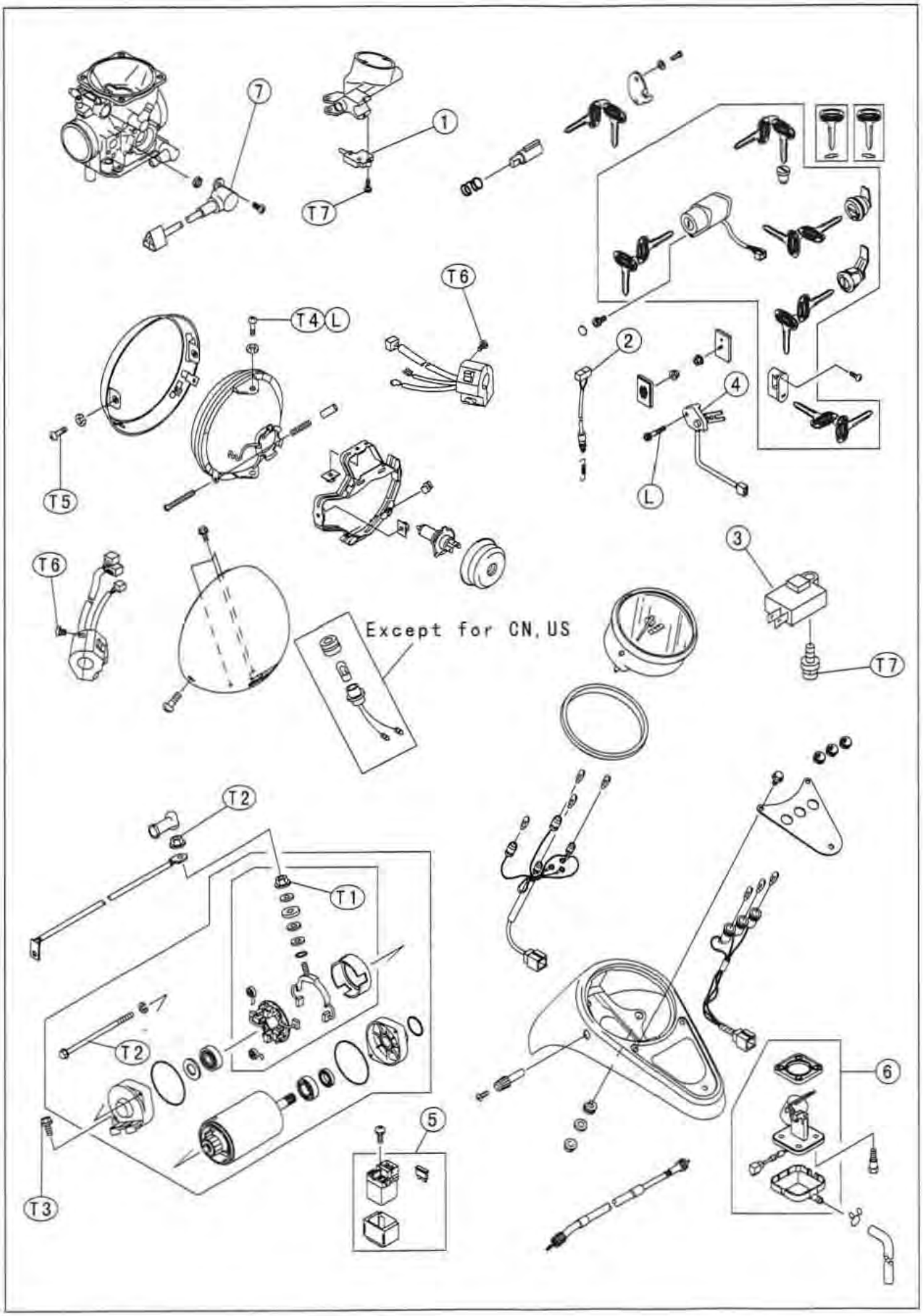

Exploded View

1. Starter Lockout Switch
2. Rear Brake Light Switch
3. Front Brake Light Switch
4. Sidestand Switch
5. Starter Relay
6. Fuel Level Sensor
7. Throttle Sensor

L: Apply a non-permanent locking agent.
T1: 11 N·m (1.1 kg·m, 95 in·lb)
T2: 4.9 N·m (0.50 kg·m, 43 in·lb)
T3: 9.8 N·m (1.0 kg·m, 87 in·lb)
T4: 2.9 N·m (0.30 kg·m, 26 in·lb)
T5: 1.0 N·m (0.10 kg·m, 9 in·lb)
T6: 3.4 N·m (0.35 kg·m, 30 in·lb)
T7: 1.2 N·m (0.12 kg·m, 10 in·lb)

Exploded View

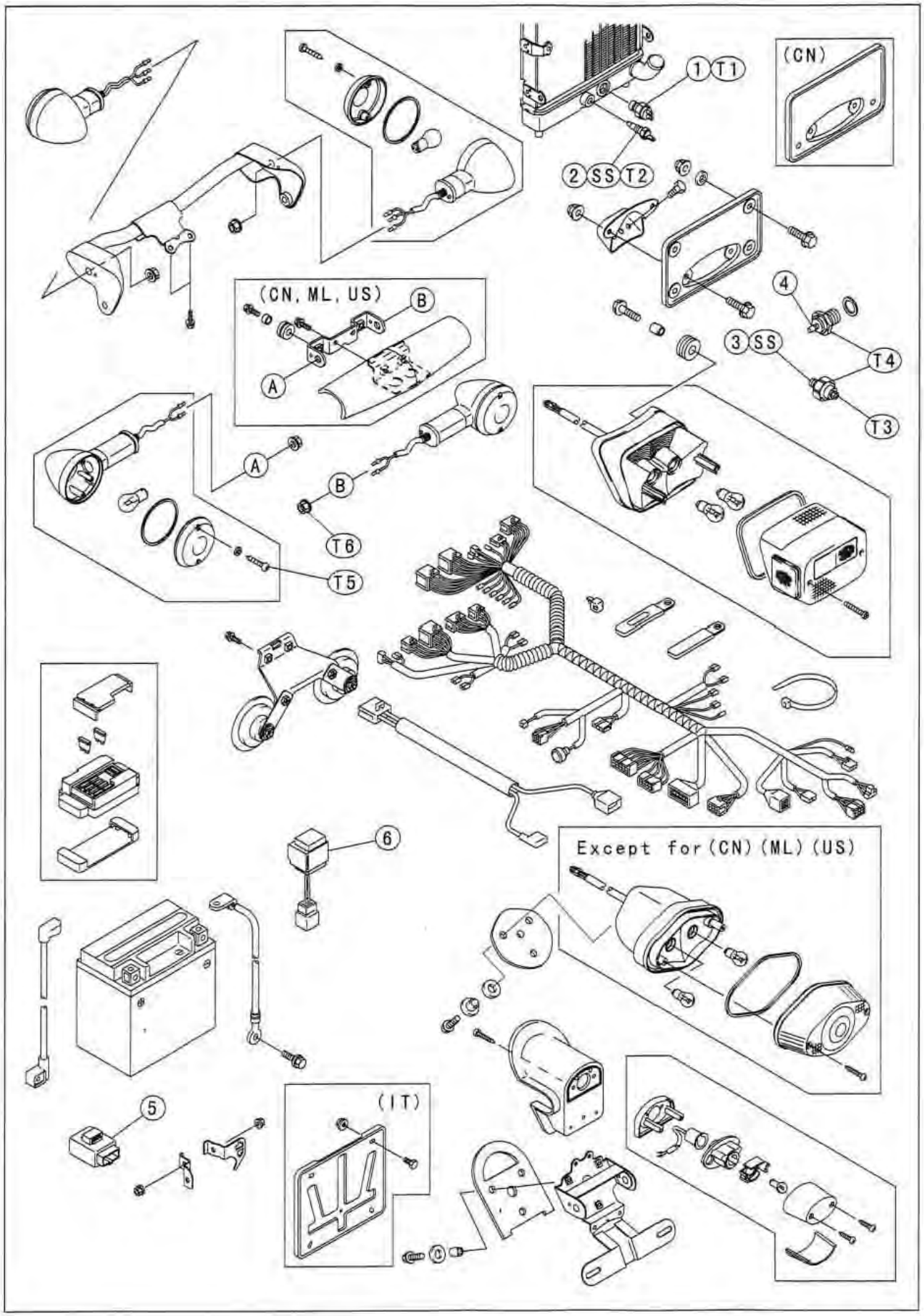

Exploded View

1. Radiator Fan Switch
2. Water Temperature Switch
3. Oil Pressure Switch
4. Neutral Switch
5. Turn Signal Control Unit
6. Oil Pressure Light Delay Unit

SS: Apply silicone sealant (Kawasaki Bond: 56019-120).
T1: 18 N·m (1.8 kg·m, 13.0 ft·lb)
T2: 7.8 N·m (0.80 kg·m, 69 in·lb)
T3: 1.5 N·m (0.15 kg·m, 13 in·lb)
T4: 15 N·m (1.5 kg·m, 11.0 ft·lb)
T5: 1.0 N·m (0.10 kg·m, 9 in·lb)
T6: 5.9 N·m (0.60 kg·m, 52 in·lb)
CN: Canadian Model
IT: Italian Model
ML: Malaysian Model
US: United States Model

Specifications

Item	Standard
Battery:	
Type	MF (Maintenance Free) Battery
Capacity	12 V 14 Ah
Voltage	12.8 V or more
Charging System:	
Alternator type	Three-phase AC × 2
DC battery charging voltage	14 ~ 15 V @3 000 r/min (rpm)
Alternator output voltage (no load)	60 ~ 90 V @3 000 r/min (rpm)
Stator coil (battery charging coil) resistance	0.33 ~ 0.49 Ω (× 1 Ω)
Regulator/rectifier Type	Load dumping regulator with full-wave rectifier
Resistance	in the text
Ignition System:	
Igniotion coil:	
Primary peak voltage	120 V or more
3 needle arcing distance	6 mm or more
Primary winding resistance	1.9 ~ 2.9 Ω (× 1 Ω)
Secondary winding resistance	18 ~ 28 kΩ (× 1 kΩ)
Spark plug:	
Spark plug gap	0.8 ~ 0.9 mm
Spark plug cap resistance	3.75 ~ 6.25 kΩ (× 1 kΩ)
Pickup coil:	
Pickup coil peak voltage	2 V or more
Pickup coil air gap	1.0 mm (Non-measurable and non-adjustable)
Pickup coil resistance	380 ~ 560 Ω (× 100 Ω)
Electric Starter System:	
Starter motor:	
Brush length	12 mm (Service limit 8.5 mm)
Commutator diameter	28 mm (Service limit 27 mm)
Fuel Pump:	
Fuel pump pressure	14 ~ 19 kPa (0.14 ~ 0.19 kg/cm^2, 2.0 ~ 2.7 psi)
Switch and Sensor:	
Rear brake light switch timing	ON after about 15 mm pedal travel
Engine oil pressure switch connections	When engine is stopped: ON
	When engine is running: OFF
Radiator fan switch connections	
Rising temperature	From OFF to ON @100 ~ 110°C (212 ~ 230°F)
Falling temperarture	From ON to OFF @97 ~ 103°C (203 ~ 217°F)
	ON: Less than 0.5 Ω
	OFF: More than 1 MΩ
Water temperature switch resistance	ON: 110 ~ 120°C (230 ~ 248°F)
	OFF: 108°C (226°F) ~ temperature less than ON temperature
Fuel level sensor resistance	FULL position: 4 ~ 10 Ω
	EMPTY position: 90 ~ 100 Ω
Throttle sensor output voltage	
At idle throttle opening	0.9 ~ 1.1 V
At full throttle opening	4.06 ~ 4.26 V

Specifications

Special Tools - Hand Tester: 57001-1394
Jack: 57001–1238
Attachment Jack: 57001–1398
Spark Plug Wrench, Hex 18: 57001-1024
Timing Light: 57001-1241
Igniter Checker: 57001-1378
Flywheel Holder: 57001-1410
Harness Adapter #3: 57001-1383
Harness Adapter #12: 57001-1397
Throttle Sensor Setting Adapter: 57001-1400

Sealant - Kawasaki Bond (Silicone Sealant): 56019-120

Servicing Precautions

There are a number of important precautions that should be followed servicing electrical systems.

- Do not reverse the battery lead connections. This will burn out the diodes on the electrical parts.
- Always check battery condition before condemning other parts of an electrical system. A fully charged battery is a must for conducting accurate electrical system tests.
- The electrical parts should never be struck sharply, as with a hammer, or allowed to fall on a hard surface. Such a shock to the parts can damage them.
- To prevent damage to electrical parts, do not disconnect the battery leads or any other electrical connections when the ignition switch is on, or while the engine is running.
- Because of the large amount of current, never keep the starter button pushed when the starter motor will not turn over, or the current may burn out the starter motor windings.
- Do not use a meter illumination bulb rated for other than voltage or wattage specified in the wiring diagram, as the meter or gauge panel could be warped by excessive heat radiated from the bulb.
- Take care not to short the leads that are directly connected to the battery positive (+) terminal to the chassis ground.
- Troubles may involve one or in some cases all items. Never replace a defective part without determining what CAUSED the failure. If the failure was caused by some other item or items, they too must be repaired or replaced, or the new replacement will soon fail again.
- Make sure all connectors in the circuit are clean and tight, and examine wires for signs of burning, fraying, etc. Poor wires and bad connections will affect electrical system operation.
- Measure coil and winding resistance when the part is cold (at room temperature).
- Color Codes:

BK	Black	G	Green	P	Pink
BL	Blue	GY	Gray	PU	Purple
BR	Brown	LB	Light blue	R	Red
CH	Chocolate	LG	Light green	W	White
DG	Dark green	O	Orange	Y	Yellow

- Electrical Connectors

Female Connectors [A]

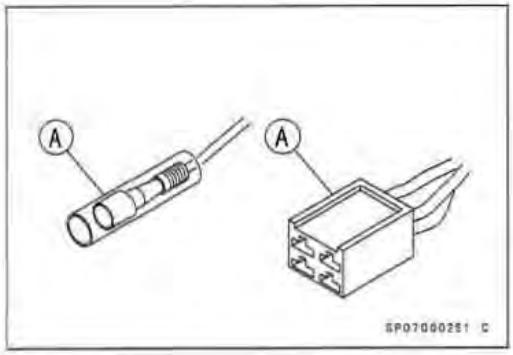

Male Connectors [B]

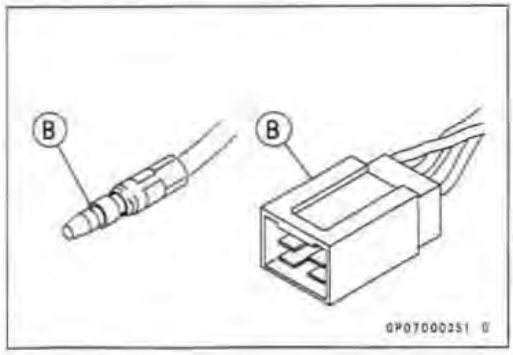

Electrical Wiring

Wiring Inspection

- Visually inspect the wiring for signs of burning, fraying, etc.
- ★ If any wiring is poor, replace the damaged wiring.
- Pull each connector [A] apart and inspect it for corrosion, dirt, and damage.
- ★ If the connector is corroded or dirty, clean it carefully. If it is damaged, replace it.
- Check that the connectors are not loose.
- Check the wiring for continuity.
- Use the wiring diagram to find the ends of the lead which is suspected of being a problem.
- Connect the hand tester between the ends of the leads.

Special Tool - Hand Tester: 57001-1394

- Set the tester to the × 1 Ω range, and read the tester.
- ★ If the tester does not read 0 Ω, the lead is defective. Replace the lead or the wiring harness [B] if necessary.

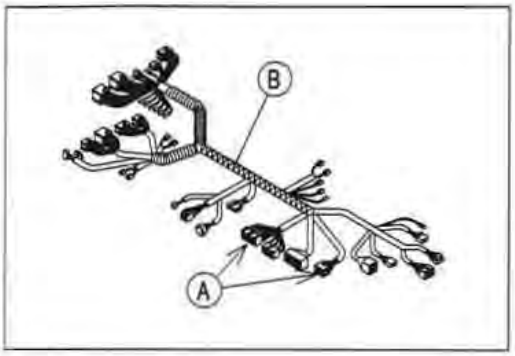

Battery

Battery Removal/Installation

- Remove:
  Front Seat (see Frame chapter)
  Battery Band [A]
- Remove the negative (–) lead [B] from the battery first.
- Remove the positive (+) lead [C] from the battery and pull out the battery.
  Front [D]

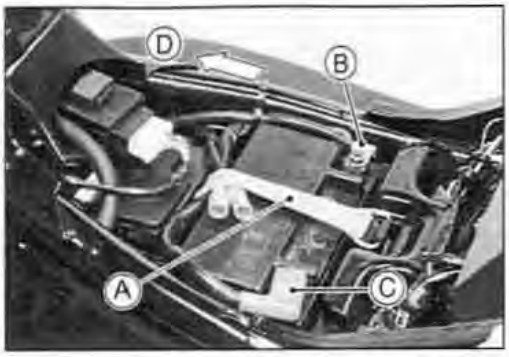

- When installing, connect the positive (+) lead first [A], then the negative (–) lead [B] to the battery.

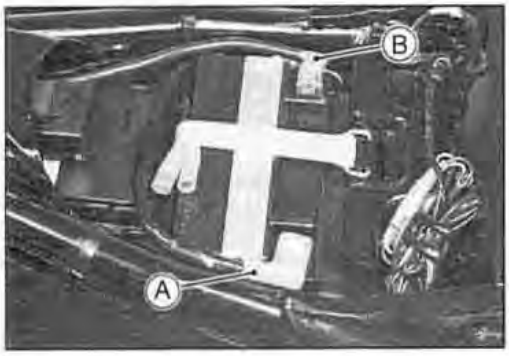

CAUTION

If the battery cable is not correctly disconnected or connected, sparks can arise at electrical connections, causing damage to electrical parts.

Electrolyte Filling

CAUTION

Do not remove the seal sheet sealing the filler ports [B] until just before use.
Be sure to use the dedicated electrolyte container for correct electrolyte volume.

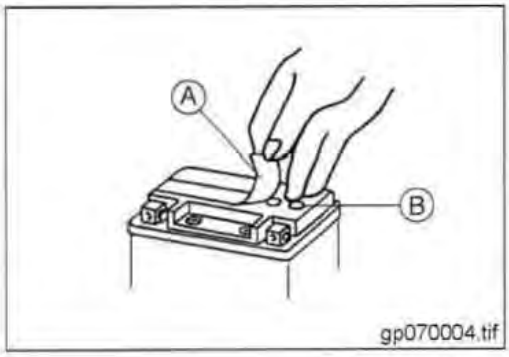

- Check to see that there is no peeling, tears or holes in the seal sheet on the top of the battery.
- Place the battery on a level surface.
- Remove the seal sheet [A].

NOTE

- *A battery whose seal sheet has any peeling, tears, or holes, requires a refreshing charge (initial charge).*

- Take the electrolyte container out of the vinyl bag.
- Detach the seal cap [A] from the container.

NOTE

- *Do not discard the seal cap because it is used as the battery plugs later.*
- *Do not peel back or pierce the seals [B] on the container.*

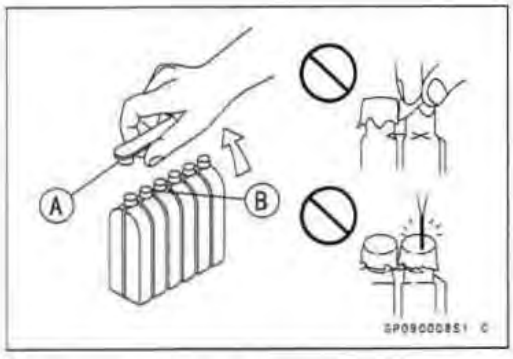

Battery

- Place the electrolyte container upside down aligning the six seals with the six battery filler ports.
- Push the container down strongly enough to break the seals. Now the electrolyte should start to flow into the battery.

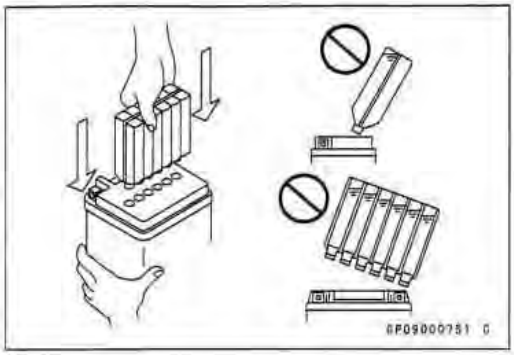

NOTE

Do not tilt the container as the electrolyte flow may be interrupted.

- Make sure air bubbles [A] are coming up from all six filler ports.
- Leave the container this way for 5 minutes or longer.

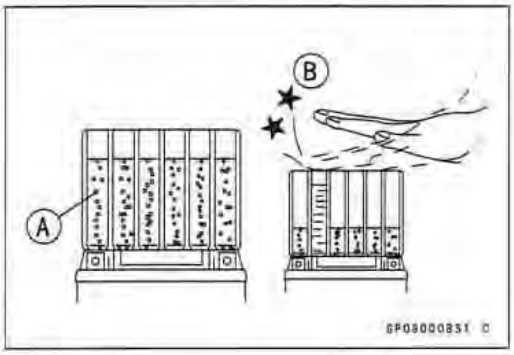

NOTE

If no air bubbles are coming up from a filler port, tap [B] the bottom of the container two or three times. Never remove the container from the battery.

CAUTION

Fill the electrolyte into the battery until the container is completely emptied.

- Be certain that all the electrolyte has flowed out.
- Tap the bottom the same way as above if there is any electrolyte left in the container.
- Now pull the container gently out of the battery.
- Let the battery sit for **20** minutes. During this time, the electrolyte permeates the special separators and the gas generated by chemical reaction is released.
- Fit the seal cap [A] tightly into the filler ports until the seal cap is at the same level as the top of the battery.

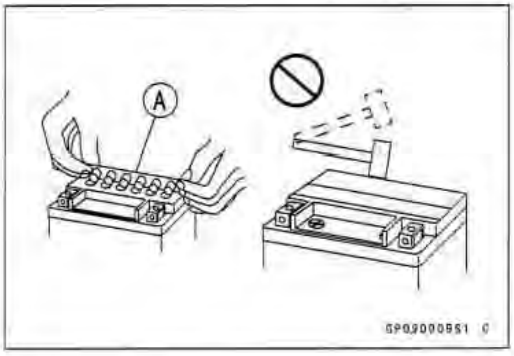

NOTE

Do not hammer. Press down evenly with both hands.

⚠WARNING

Once you installed the seal cap after filling the battery, never remove it, nor add any water or electrolyte.

Initial Charge

While a maintenance free battery can be used after only filling with electrolyte, a battery may not be able to sufficiently move a starter motor to start an engine in the cases shown in the table below, where an initial charge is required before use. However, if a battery shows a terminal voltage of 12.8 V or more after 10 minutes of filling (Note 1), no initial charge is necessary.

Condition requiring initial charge	Charging method
At low temperature (lower than 0°C)	1.4 A × 2 ~ 3 hours
Battery has been stored under high temperature and humidity.	1.4 A × 15 ~ 20 hours
Seal sheet has been removed, or broken – peeling, tear or hole.	
Battry as old as 2 years or more after manufacture. Battery manufacturing date is printed on battery top. Example) 12 (Day) 10 (Month) 98 (Year) T1 (Mfg. location)	

Note 1: Terminal voltage – To measure battery terminal voltage, use a digital voltmeter.

Battery

Precautions

1) No need of topping-up
   No topping-up is necessary in this battery until it ends its life under normal use. Forcibly prying off the seal cap to add water is very dangerous. Never do that.
2) Refreshing charge
   If an engine will not start, a horn sounds weak, or lamps are dim, it indicates the battery has been discharged. Give refresh charge for 5 to 10 hours with charge current shown in the specification (see this chapter).
   When a fast charge is inevitably required, do it following precisely the maximum charge current and time conditions indicated on the battery.

CAUTION

This battery is designed to sustain no unusual deterioration if refresh-charged according to the method specified above. However, the battery's performance may be reduced noticeably if charged under conditions other than given above. Never remove the seal cap during refresh charge.
If by chance an excessive amount of gas is generated due to overcharging, the safety valve operates to keep the battery safe.

3) When you do not use the motorcycle for months:
   Give a refresh charge before you store the motorcycle and store it with the negative lead removed. Give a refresh charge **once a month** during storage.
4) Battery life:
   If the battery will not start the engine even after several refresh charges, the battery has exceeded its useful life. Replace it. (Provided, however, the vehicle's starting system has no problem).

⚠WARNING

Keep the battery away from sparks and open flames during charging, since the battery gives off an explosive gas mixture of hydrogen and oxygen. When using a battery charger, connect the battery to the charger before turning on the charger.
This procedure prevents sparks at the battery terminals which could ignite any battery gases.
No fire should be drawn near the battery, or no terminals should have the tightening loosened.
The electrolyte contains sulfuric acid. Be careful not to have it touch your skin or eyes. If touched, wash it off with liberal amount of water. Get medial attention if severe.

Interchange

A maintenance free battery can fully display its performance only when combined with a proper vehicle electric system. Therefore, replace a maintenance free battery only on a motorcycle which was originally equipped with a maintenance free battery.

Be careful, if a maintenance free battery is installed on a motorcycle which had an ordinary battery as original equipment, the maintenance free battery's life will be shortened.

Battery

Charging Condition Inspection

○ Battery charging condition can be checked by measuring battery terminal voltage.

● Remove the front seat (see Frame chapter).

● Disconnect the battery terminals.

CAUTION

Be sure to disconnect the negative terminal first.

● Measure the battery terminal voltage.

NOTE

○ *Measure with a digital voltmeter [A] which can be read one decimal place voltage.*

★ If the reading is below the specified, refreshing charge is required.

Battery Terminal Voltage

Standard: 12.8 V or more

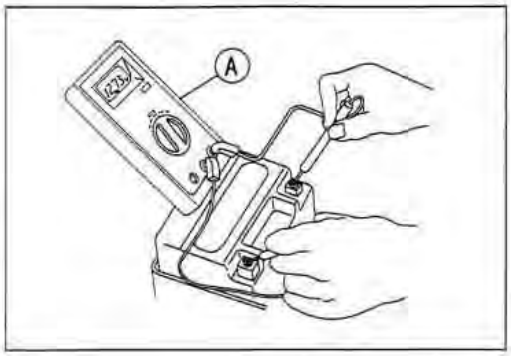

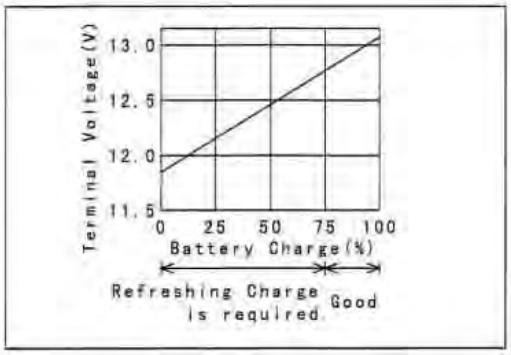

Refreshing Charge

● Disconnect the battery terminals (see Charging Condition Inspection).

● Remove the battery [A].

● Do refresh-charge by following method according to the battery terminal voltage.

⚠ WARNING

This battery is sealed type. Never remove seal cap [B] even at charging. Never add water. Charge with current and time as stated below.

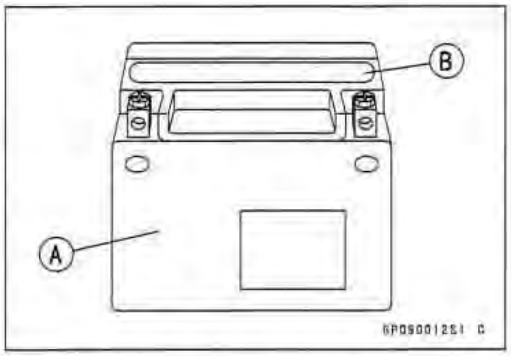

Terminal Voltage: 11.5 ~ less than 12.8 V

Standard Charge 1.4 A × 2 ~ 12 h (see following chart)

Quick Charge 7.0 A × 1.0 h

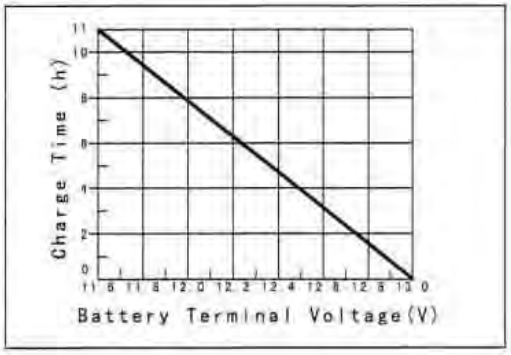

CAUTION

If possible, do not quick charge. If the quick charge is done due to unavoidable circumstances, do standard charge later on.

Terminal Voltage: less than 11.5 V

Charging Method: 1.4 A × 20 h

NOTE

○ *If the current does not flow when charging, raise the voltage initially (25 V as maximum), and let down the voltage to charge when the current starts to flow as a yardstick. If ammeter shows no change in current after 5 minutes, you need a new battery. The current, if it can flow into the battery, tends to become excessive . Adjust the voltage as often as possible to keep the current at standard value (1.4 A).*

Battery [A]
Battery Charger [B]
Standard Value [C]
Current starts to flow [D]

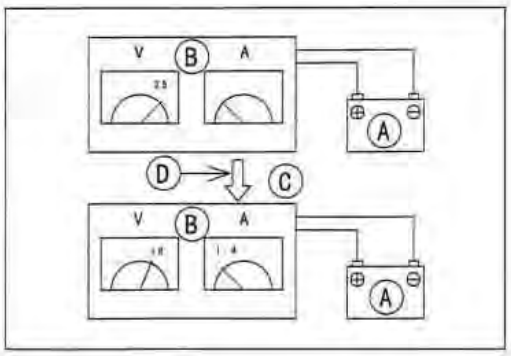

Battery

● Determine the battery condition after refreshing charge.
○ Determine the condition of the battery 30 minutes after completion of the charge by measuring the terminal voltage according to the table below.

Criteria	Judgement
12.8 V or higher	Good
12.0 ~ 12.8 V or lower	Charge insufficient — Recharge
12.0 V or lower	Unserviceable — Replace

Charging System

Alternator Outer Cover Removal

- Remove:
  Rear Shift Pedal [A] (see Crankshaft/Transmission chapter)
  Front Shift Pedal [B]
- Unscrew the bolts [C] and take off the alternator outer cover [D].

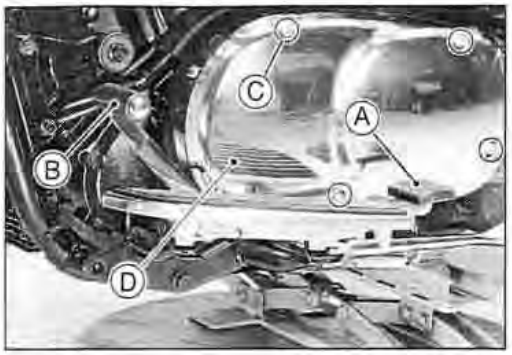

Alternator Outer Cover Installation

- First, insert the upper edge [A] of the alternator outer cover under the left crankcase ribs [B]. This prevents the rib failure.
- Apply a soap and water solution to the body of the alternator outer cover bolts [C] for easy installation and tighten them.

Torque - Alternator Outer Cover Bolts: 12 N·m (1.2 kg·m, 104 in·lb)

Front [D]

- Install the front and rear shift pedals (see Crankshaft/Transmission chapter).

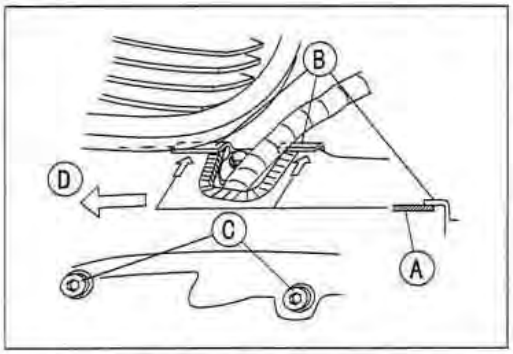

Alternator Cover Removal

- Remove the alternator outer cover (see this chapter).
- Disconnect the pickup coil connector and outer alternator connector.
- Unscrew the bolts [A] and take off the alternator cover [B].
- Replace the gasket with a new one.

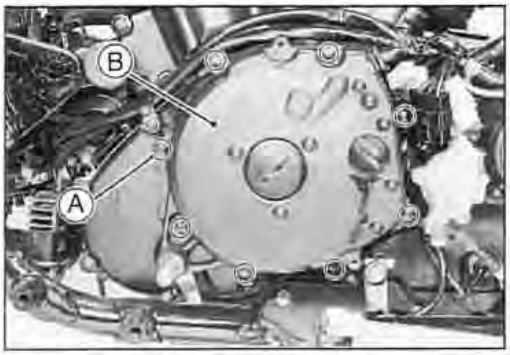

Alternator Inner Cover Removal

- Drain the engine oil (see Engine Lubrication System chapter).
- Remove:
  Fuel Seat (see Frame chapter)
  Fuel Tank (see Fuel System chapter)
  Left Air Cleaner Housing (see Fuel System chapter)
  Surge Tank (see Fuel System chapter)
  Vacuum Switch Valve
  Alternator Outer Cover and Alternator Cover (see this chapter)
  Alternator Connectors
- Loosen the front and rear exhaust pipe holder nuts, and both chamber bolts.
- Remove the front engine mounting bolt.
- Loosen the rear engine mounting bolt.
- Lift up [A] the front part of the engine, using the jack (special tool) and a commercially available jack until the inner cover clears the lower frame [B].

Special Tool - Jack: 57001 — 1238
Attachment Jack: 57001–1398

- Unscrew the bolts [C] and take off the alternator inner cover [D].
- Replace the gasket with a new one.



Charging System

Alternator Rotor Removal

- Remove the alternator cover (see this chapter).
- Hold the alternator rotor [A] steady with the flywheel holder [B], and remove the rotor bolt [C].

Special Tool - Flywheel Holder: 57001-1410

- Take the alternator rotor, washer, and ratchet off the crankshaft.

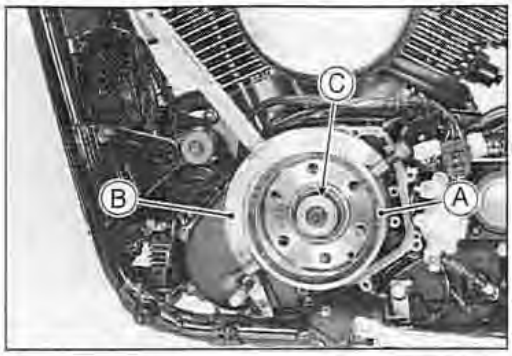

Alternator Installation

- Install the alternator rotor [A] while fitting the alignment notch [B] of the splines onto the alignment tooth [C].
- Tighten the alternator rotor bolt to the specified torque.

Torque - Alternator Rotor Bolt: 78 N·m (8.0 kg·m, 57 ft·lb)

- Install the alternator cover.

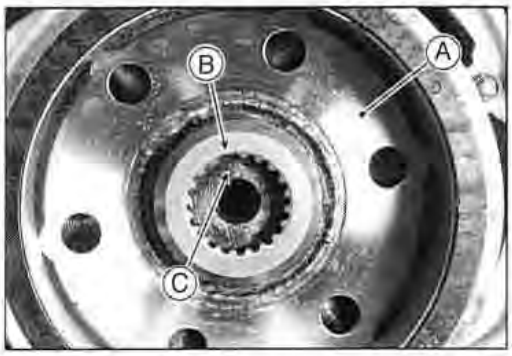

Alternator Outside Stator Removal

- Remove the alternator cover (see this chapter).
- Remove the pickup coils [A].
- Unscrew the Allen bolts [B] and take the stator [C] off the alternator cover [D].

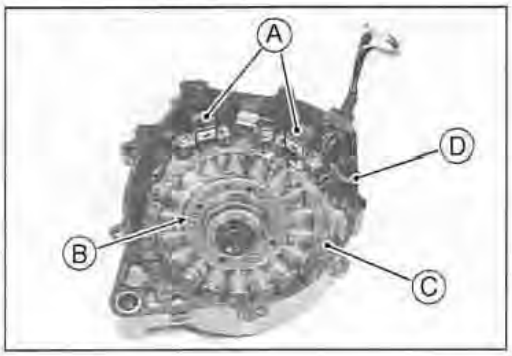

Alternator Outside Stator Installation

- Install the outside stator with the Y leads on the alternator cover [A].

Non-permanent Locking Agent - Alternator Stator Bolts

Torque - Alternator Stator Bolts: 13 N·m (1.3 kg·m, 113 in·lb)

- Install the pickup coils as shown.
  Pickup Coil [B] with shorter leads (BK and BK/Y) for #1 (front)
  Pickup Coil [C] with longer leads (BK/W and BK/R) for #2 (rear)

Torque - Pickup Coil Screws: 2.9 N·m (0.30 kg·m, 26 in·lb)

- Run the longer pickup coil leads over the shorter pickup coil leads above the alternator leads.

Non-permanent Locking Agent - Stator Lead Holder Screw
Pickup Coil Lead Holder Bolt

Torque - Stator Lead Holder Screw: 9.8 N·m (1.0 kg·m, 87 in·lb)
Pickup Coil Lead Holder Bolt: 9.8 N·m (1.0 kg·m, 87 in·lb)

- Apply silicone sealant to the grommets, and fit them into the notch of the alternator cover.
- First, install the grommet [D] of the alternator leads, and then the grommet [E] of the pickup coil leads with the round mark [F] up.
- Pull [G] the alternator leads and pickup coil leads [I] outside the alternator cover, and **reduce slack of leads in the cover as possible** in order to prevent contact with the rotor.
- Apply silicone sealant to the mating surface [J] of the grommet.
- Connect the outside alternator connector (Y leads) to the connector (Y leads) of the regulator/rectifier.

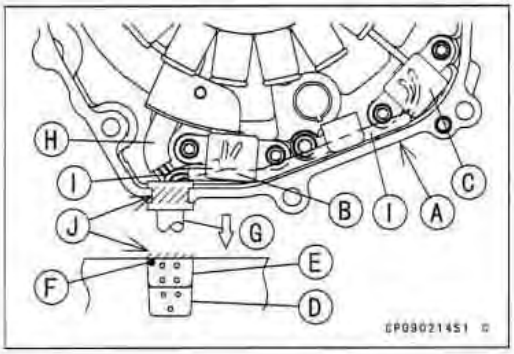

Charging System

Alternator Inside Stator Removal

- Remove the alternator outer cover, the alternator cover, the alternator inner cover, and the alternator rotor (see this chapter).
- Unscrew the inside stator bolts [A] and take the inside stator [B] and holder [C] off the left crankcase.

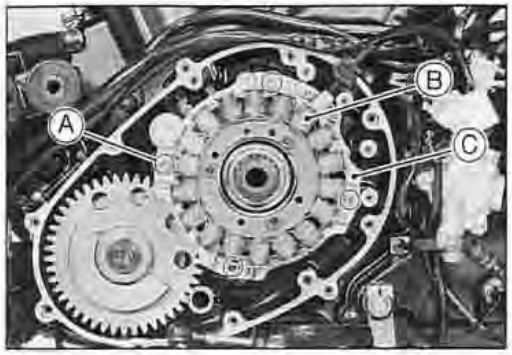

Alternator Inside Stator Installation

- Install the inside stator with the Y/BK leads on the left crankcase.

Non-permanent Locking Agent - Inside Stator Holder Bolts

Torque - Inside Stator Holder Bolts: 13 N·m (1.3 kg·m, 113 in·lb)

- Apply silicone sealant to the grommet and fit it into the notch of the alternator inner cover.
- Connect the inside alternator connector (Y/BK leads) to the connector (Y/BK leads) of the regulator/rectifier.

Charging Voltage Inspection

- Check the battery condition.
- Warm up the engine to obtain actual alternator operating conditions.
- Remove the front seat (see Frame chapter).
- Check that the ignition switch is turned off, and connect the hand tester to the battery as shown in the table.

Regulator/Rectifier Output Voltage

Tester Range	Connections		Reading @3000 rpm
	Tester (+) to	Tester (–) to	
25 V DC	Battery (+)	Battery (–)	14 ~ 15 V

- Turn on the ignition switch and start the engine, and note the voltage readings at various engine speeds with the headlight turned on and then turned off (To turn off the headlight of the US model, disconnect the headlight connector in the headlight unit). The readings should show nearly battery voltage when the engine speed is low, and as the engine speed rises, the readings should also rise. But they must be kept under the specified voltage.
- Turn off the ignition switch to stop the engine, and disconnect the hand tester.

★ If the charging voltage is kept between the values given in the table, the charging system is considered to be working normally.

★ If the output voltage is much higher than the values specified in the table, the regulator/rectifier is defective or the regulator/rectifier leads are loose or open.

★ If the battery voltage does not rise as the engine speed increases, then the regulator/rectifier is defective or the alternator output is insufficient for the loads. Check the alternator and regulator/rectifier to determine which part is defective.

Charging System

Alternator Inspection

There are three types of alternator failures: short, open (wire burned out), or loss in rotor magnetism. A short or open in one of the coil wires will result in either a low output, or no output at all. A loss in rotor magnetism, which may be caused by dropping or hitting the alternator, by leaving it near an electromagnetic field, or just by aging, will result in low output.

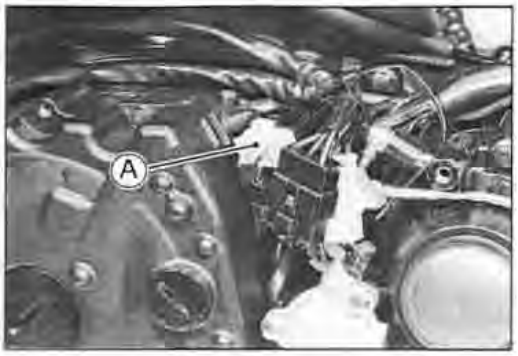

- To check the alternator output voltage, do the following procedures.
- Remove the alternator outer cover and disconnect the outside alternator connector [A].
- Connect the hand tester to the connector as shown.

Special Tool - Hand Tester: 57001-1394

- Start the engine.
- Run it at 3000 rpm of the engine speed.
- Note the voltage readings.

Alternator Output Voltage

Tester Range	Connections		Reading @3000 rpm
	Tester (+) to	Tester (–) to	
250 V AC	One yellow lead (Connector 1)	Another yellow lead (Connector 1)	60 ~ 90 V

★If the output voltage shows the value in the table, the alternator operates properly and the regulator/rectifiers are damaged. A much lower reading than the value in the table indicates that the alternator is defective.

- Repeat the test for the other yellow leads.
- Repeat the test for the inside alternator connector.

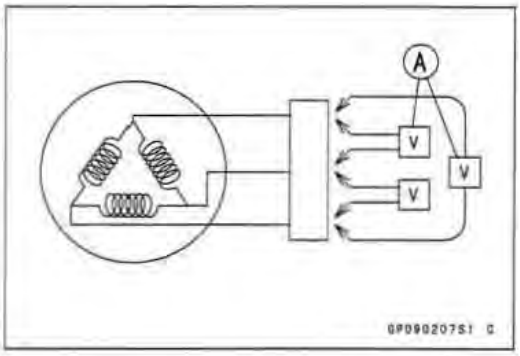

Hand Tester [A]

- Check the stator coil resistance as follows:
- Stop the engine.
- Connect the hand tester [A] as shown in the table.
- Note the resistance readings.

Stator Coil Resistance

Tester Range	Connections		Reading
	Tester (+) to	Tester (–) to	
× 1 Ω	One yellow lead (Connector 1)	Another yellow lead (Connector 1)	0.33 ~ 0.49 Ω

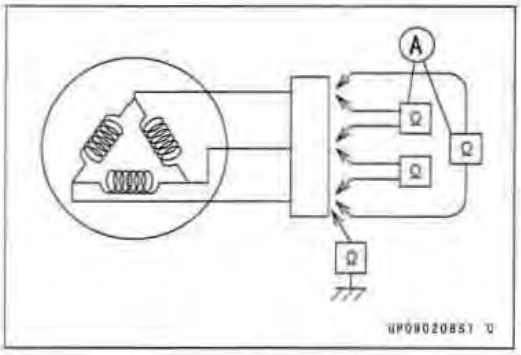

★If there is more resistance than shown in the table, or no hand tester reading (infinity), the stator has an open lead and must be replaced. Much less than this resistance means the stator is shorted, and must be replaced.

- Using the highest resistance range of the hand tester, measure the resistance between each of the yellow leads and chassis ground.

★Any hand tester reading less than infinity (∞) indicates a short, necessitating stator replacement.

★If the stator coil has normal resistance, but the voltage check showed the alternator to be defective, then the rotor magnets have probably weakened, and the rotor must be replaced.

- Repeat the test for the other yellow leads.
- Repeat the test for the inside alternator connector with the Y/BK leads.

Charging System

Regulator/Rectifier Removal

- Remove the alternator outer cover (see this chapter).
- Remove the regulator/rectifier connectors.
  Left Regulator/Rectifier Connector [A]
  Right Regulator/Rectifier Connector [B]

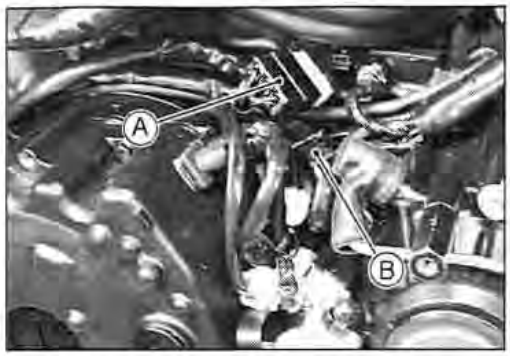

- Remove the regulator/rectifier mounting bolts [A] and take off the regulator/rectifiers [B].

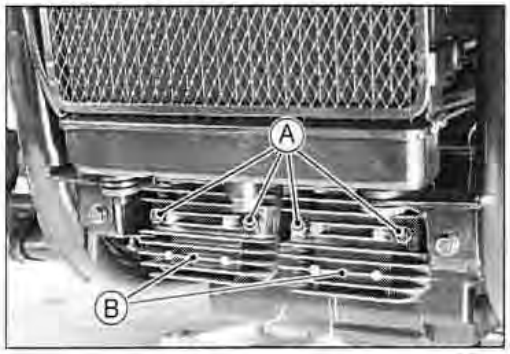

Rectifier Inspection

- Remove the alternator outer cover (see this chapter).
- Check the rectifier resistance as follows.
- Disconnect the regulator/rectifier connector.
- Connect the hand tester (special tool) to the regulator/rectifier as shown in the table, and check the resistance in both directions of each diode in the rectifier following the table.

★The resistance should be low in one direction and more than ten times as much in the other direction. If any two leads are low or high in both directions, the rectifier is defective and the regulator/rectifier must be replaced.

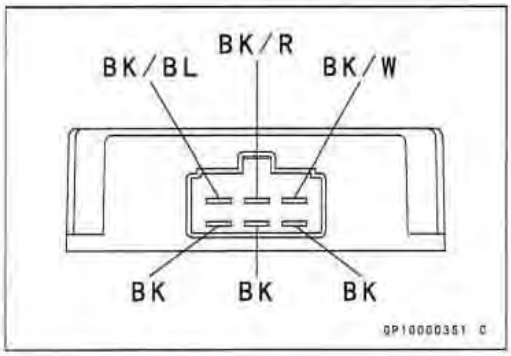

NOTE

The actual tester reading varies with the hand tester used and the individual rectifier, but, generally speaking, the lower reading should be from zero to one half the scale.

Rectifier Circuit Inspection

No.	Connections		Reading	Tester Range
	Tester (+) to	Tester (–) to		
1	BK1	BK/BL	∞	× 10 Ω or × 100 Ω
2	BK2			
3	BK3			
4	BK1	BK/W	1/2 scale	
5	BK2			
6	BK3			
7	BK/BL	BK1		
8		BK2		
9		BK3		
10	BK/W	BK1	∞	
11		BK2		
12		BK3		

- Repeat the test for another regulator/rectifier.

Charging System

Regulator Inspection

To test the regulator out of circuit, use three 12 V batteries and a test light (12 V 3 ~ 6 W bulb in a socket with leads).

CAUTION

The test light works as an indicator and also as a current limiter to protect the regulator/rectifier from excessive current. Do not use an ammeter instead of a test light.

● Do the 1st step regulator circuit test.
Connect the test light and the 12 V battery to the regulator/rectifier as shown.
Check BK1, BK2, BK3 terminals respectively.
★ If the test light turns on, the regulator/rectifier is defective. Replace it.
★ If the test light does not turn on, continue the test.

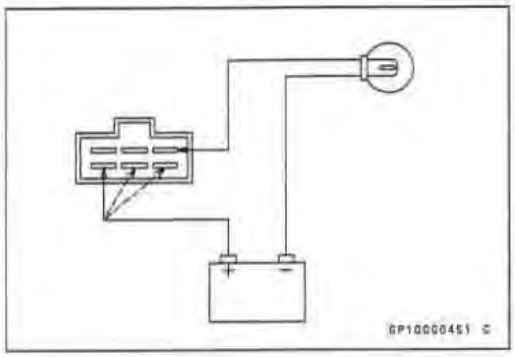

● Do the 2nd step regulator circuit test.
Connect the test light and the 12 V battery in the same manner as specified in the "1st step regulator circuit test".
Apply 12 V to the BK/R terminal.
Check BK1, BK2, and BK3 terminals respectively.
★ If the test light turns on, the regulator/rectifier is defective. Replace it.
If the test light does not turn on, continue the test.

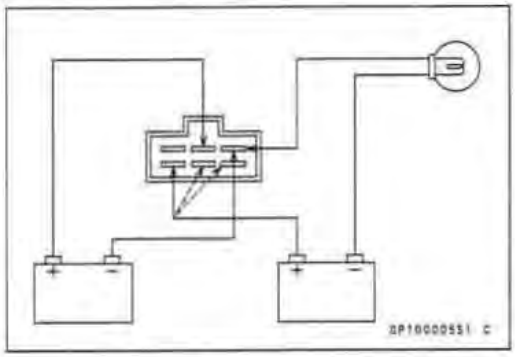

● Do the 3rd step regulator circuit test.
Connect the test light and the 12 V battery in the same manner as specified in the "1st step regulator circuit test".
Momentarily apply 24 V to the BK/R terminal by adding a 12 V battery.
Check BK1, BK2, and BK3 terminals respectively.

CAUTION

Do not apply more than 24 volts. If more than 24 volts is applied, the regulator/rectifier may be damaged. Do not apply 24 V more than a few seconds. If 24 volts is applied for more than a few seconds, the regulator/rectifier may be damaged.

★ If the test light does not light when 24 V is applied momentarily to the BK/R terminal, the regurator/rectifier is defective. Replace it.
★ If the regulator/rectifier passes all the tests described, it may still be defective. If the charging system still does not work properly after checking all the components and the battery, test the regulator/rectifier by replacing it with a known good unit.
● Repeat the test for another regulator/rectifier.

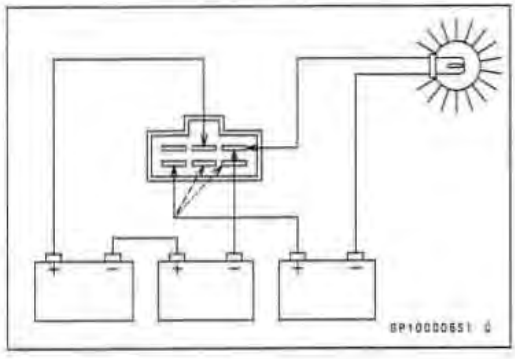

Charging System

Charging System

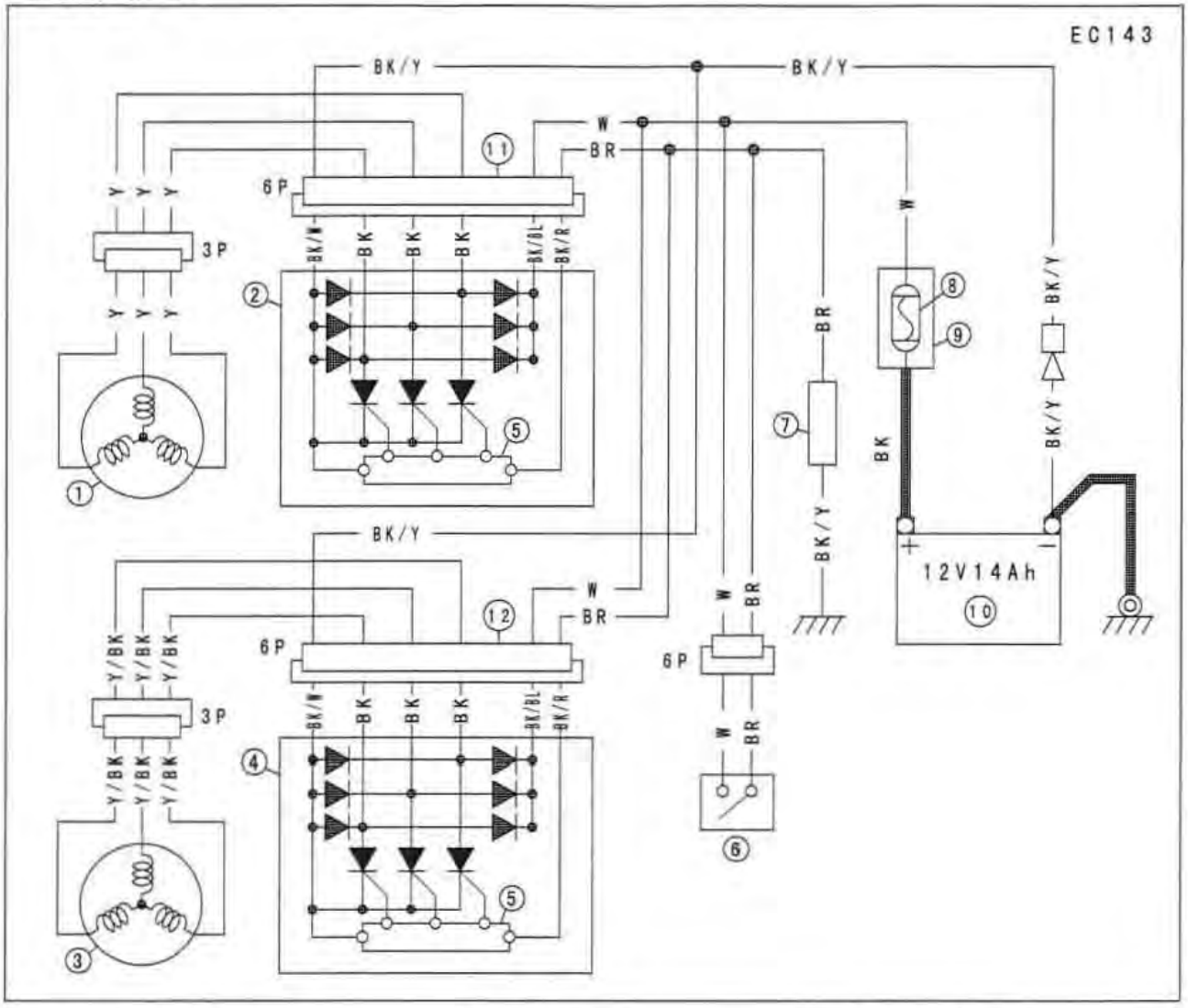

1. Alternator 1 (Outside)
2. Regulator/Rectifier 1
3. Alternator 2 (Inside)
4. Regulator/Rectifier 2
5. Controller
6. Ignition Switch
7. Load
8. Main Fuse 30 A
9. Starter Relay
10. MF Battery
11. Connector 1
12. Connector 2

Ignition System

Ignition System Circuit

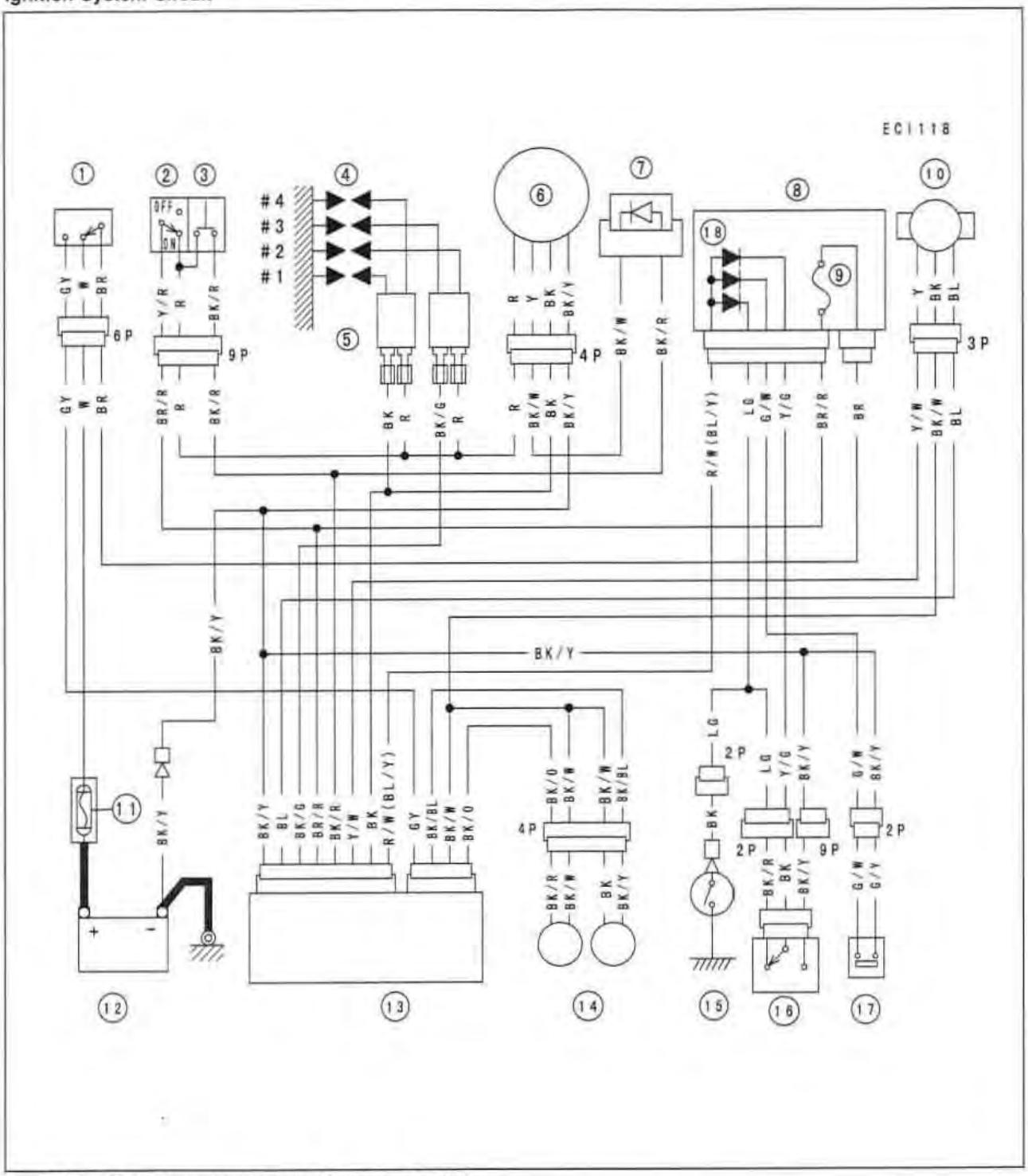

( ): Except for Australia, Canada, Malaysia, and U.S.

1. Ignition Switch
2. Engine Stop Switch
3. Starter Button
4. Spark Plugs
5. Ignition Coils
6. Electric Fuel Pump
7. Fuel Pump Diode
8. Junction Box
9. Ignition Fuse 10 A
10. Throttle Sensor
11. Main Fuse 30 A
12. MF Battery
13. IC Igniter
14. Pickup Coils
15. Neutral Switch
16. Starter Lockout Switch
17. Sidestand Switch
18. Interlock Diodes

Ignition System

Ignition System Troubleshooting

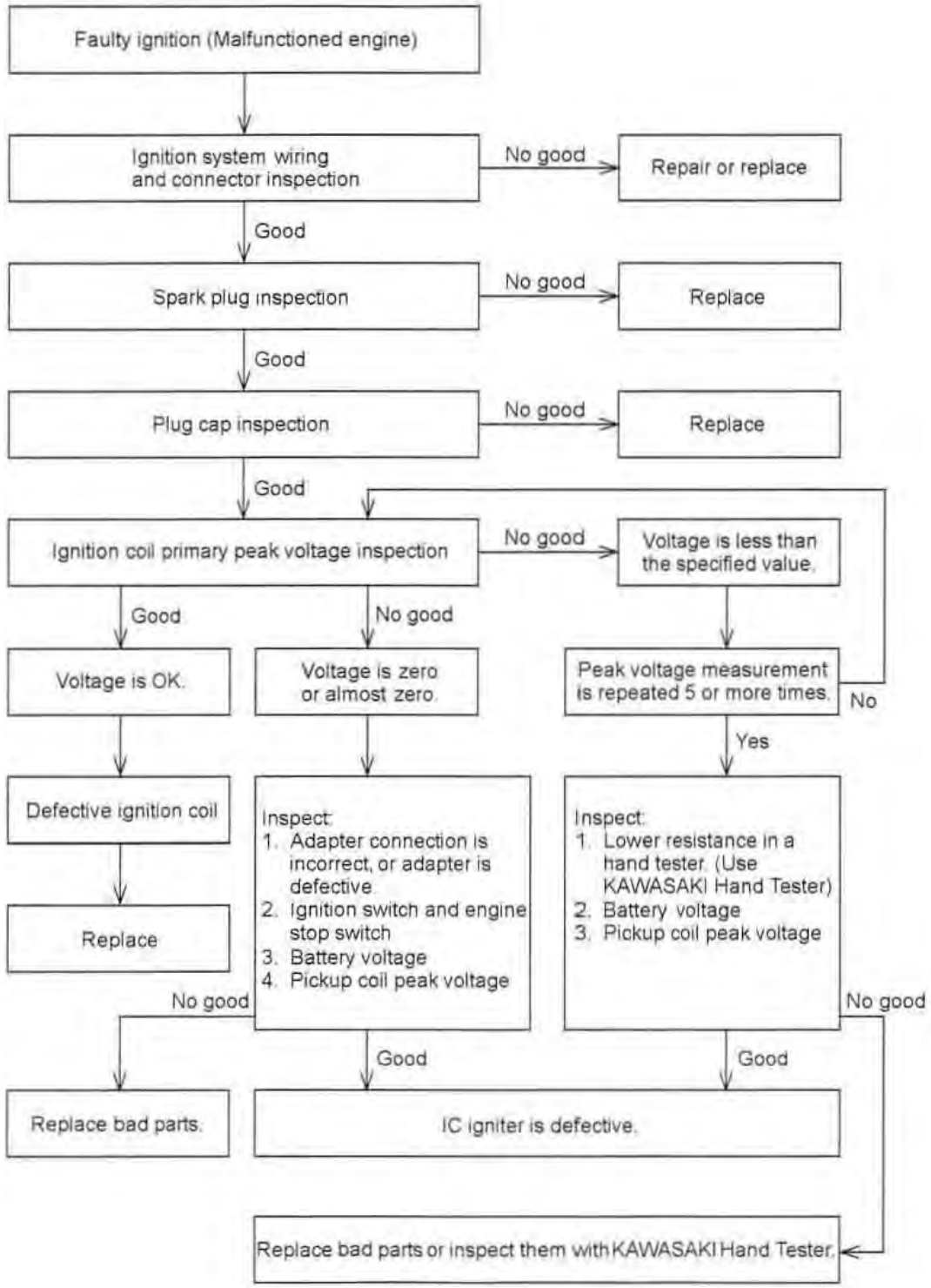

Ignition System

⚠ WARNING

The ignitioin system produces extremely high voltage. Do not touch the spark plugs, ignition coils, or spark plug leads while the engine is running, or you could receive a severe electrical shock.

CAUTION

Do not disconnect the battery leads or any other electrical connections when the ignition switch is on, or while the engine is running. This is to prevent IC igniter damage.
Do not install the battery backwards. The negative side is grounded. This is to prevent damage to the diodes and IC igniter.

Ignition Coil Removal

- Remove the fuel tank (see Fuel System chapter).
- Disconnect the primary leads and remove the mounting nuts [A].
- Pull off the secondary leads [B] from the spark plugs.
  Front [C]

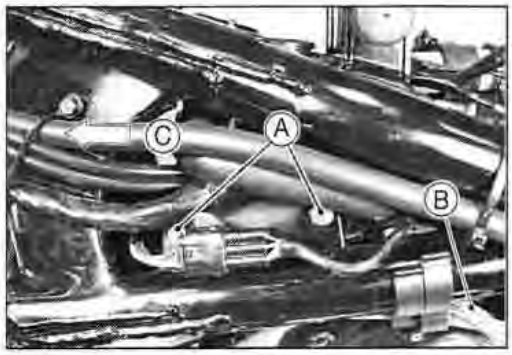

- Take out the ignition coil [A] as shown.



Ignition Coil Installation

- Connect the primary leads to the ignition coil terminals and run the secondary leads according to the Cable, Wire, and Hose Routing section in the General Information chapter.

Ignition Coil Inspection

- Remove the ignition coils (see this chapter).
- Measure the arcing distance with a commercially available coil tester [A] to check the condition of the ignition coil [B].
- Connect the ignition coil (with the spark plug cap left attached at the end of the spark plug lead) to the tester in the manner prescribed by the manufacturer and measure the arcing distance.

Ignition Coil Arcing Distance
Standard: 6 mm or more

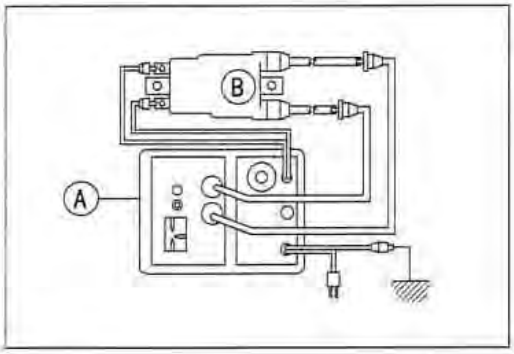

Ignition System

⚠WARNING

To avoid extremely high voltage shocks, do not touch the coil body or leads.

★If the distance reading is less than the specified value, the ignition coil or spark plug caps are defective.

● To determine which part is defective, measure the arcing distance again with the spark plug caps removed from the ignition coil. Remove the caps by turning them counterclockwise.

★If the arcing distance is subnormal as before, the trouble is with the ignition coil itself. If the arcing distance is now normal, the trouble is with the spark plug cap.

★If the coil tester is not available, the coil can be checked for a broken or badly shorted winding with the hand tester (special tool).

NOTE

The hand tester cannot detect layer shorts and shorts resulting from insulation breakdown under high voltage.

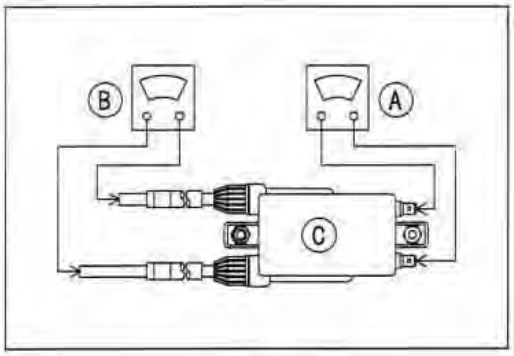

● Measure the primary winding resistance as follows.
Connect the hand tester between the coil terminals.
Set the tester to the × 1 Ω range, and read the tester.
● Measure the secondary winding resistance as follows.
Remove the plug caps by turning them counterclockwise.
Connect the tester between the spark plug leads.
Set the tester to the × 1 kΩ range and read the tester.

Measure primary winding resistance [A].
Measure secondary winding resistance [B].
Ignition Coil [C]

Ignition Coil Winding Resistance

Primary Windings:	**1.9 ~ 2.9 Ω (× 1 Ω)**
Secondary Windings:	**18 ~ 28 kΩ (× 1 kΩ)**

★If the tester does not read as specified, replace the coil.
To install the plug cap, turn it clockwise.

Spark Plug Removal

● Remove the spark plug caps.
● Remove the spark plugs using the 18 mm plug wrench.

Special Tool - Spark Plug Wrench, Hex 18: 57001-1024

Spark Plug Installation

● Insert the spark plug vertically into the plug hole with the plug installed in the plug wrench (special tool) [A].
● Tighten the plugs.

Special Tool - Spark Plug Wrench, Hex 18: 57001-1024

Torque - Spark Plugs: 18 N·m (1.8 kg·m, 13.0 ft·lb)

● Fit the plug caps securely.



Ignition System

Spark Plug Cleaning/Inspection

- Clean the spark plug, preferably in a sandblasting device, and then clean off any abrasive particles. The plug may also be cleaned using a high-flash point solvent and a wire brush or other suitable tool.
- ★ If the spark plug center electrode [A] and/or side electrode [B] are corrected or damaged, or if the insulator [C] is cracked, replace the plug.
- Use the standard spark plug or its equivalent.

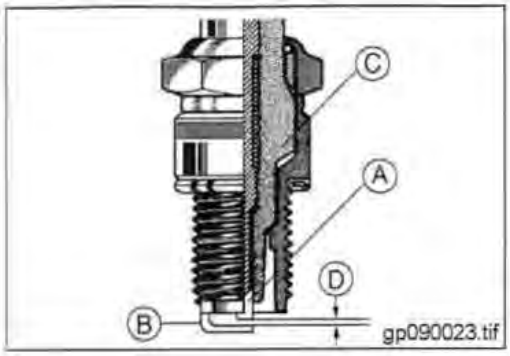

Spark Plug Gap Inspection

- Measure the gap [D] with a wire-type thickness gauge.
- ★ If the gap is incorrect, carefully bend the side electrode with a suitable tool to obtain the correct gap.

Spark Plug Gap: 0.8 ~ 0.9 mm

Ignition Coil Primary Peak Voltage

NOTE

○ *Be sure the battery is fully charged.*

- Remove the fuel tank (see Fuel System chapter).
- Remove all the spark plug caps but do not remove the spark plugs.
- Install new spark plugs into all the spark plug caps, and ground them onto the engine.
- Install a commercially available peak voltage adapter [A] into the hand tester [B].
- Connect the adapter between the ignition coil primary lead terminal and the engine ground with the primary lead left connected.

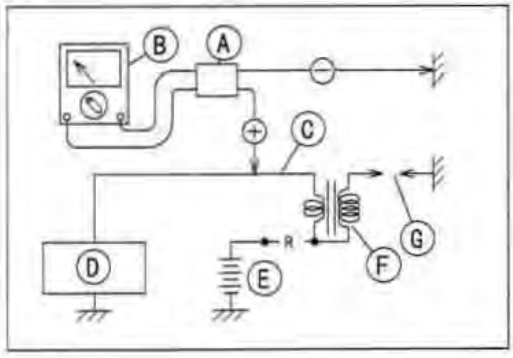

Recommended Tool: Peak Voltage Adapter
Type: KEK-54-9-B
Brand: KOWA SEIKI

○ Raise the main harness and coolant hose, and insert the adapter probe into the terminal of the primary lead [C].
Igniter [D]
Battery [E]
Ignition Coil [F]
New Spark Plugs [G]

Special Tool - Hand Tester: 57001-1394
Hand Tester Range: × DC 250 V

Primary Lead Connections:

	Adapter (R, +)		Adapter (BK, −)
Front Ignition Coil:	BK	—	Ground
Rear Ignition Coil:	BK/G	—	Ground

Ignition System

⚠ WARNING

To avoid extremely high voltage shocks, do not touch the spark plugs or tester connections.

- Turn the ignition switch and the engine stop switch ON.
- Pushing the starter button, turn the engine 4 ~ 5 seconds with the transmission in neutral to measure the primary peak voltage.
- Repeat the measurements 5 or more times for one ignition coil.

Ignition Coil Primary Peak Voltage
Standard: 120 V or more

- Repeat the test for the other ignition coil.

★ If the reading is less than the specified value, check the following:
Ignition Coils (see Ignition Coil Inspection)
Pickup Coils (see Pickup Coil Inspection)

★ If the ignition coils and pickup coils are normal, check the IC igniter (see IC Igniter Inspection).

Ignition Timing Inspection

- Remove the alternator outer cover (see this chapter).
- Remove the timing inspection plug.
- Attach the timing light [A] to the front ignition coil lead in the manner prescribed by the manufacturer.

Special Tool - Timing Light: 57001-1241

- Start the engine and aim the timing light at the ignition timing mark on the alternator rotor.
- Run the engine at the speeds specified and note the alignment of the ignition timing marks.



Ignition Timing

Engine speed r/min (rpm)	Hole notch [A] aligns with:
800 (AR, CA, FG, ST: 1000) and below	F or R mark [B] on alternator rotor

F Mark: For front cylinder
R Mark: For rear cylinder

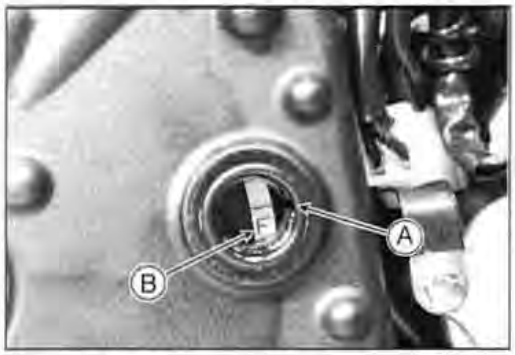

- Repeat the test for the rear cylinder.

★ If the ignition timing is incorrect, check the following:
Pickup Coils (see Pickup Coil Inspection)
IC Igniter (see IC Igniter Inspection)

Pickup Coil Removal

- Remove the alternator outer cover (see this chapter).
- Pull off the pickup coil connector [A] and outside alternator connector [B].

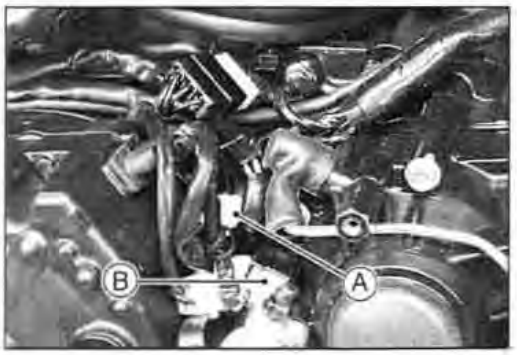

Ignition System

- Remove the alternator cover [A] (see this chapter).
- Unscrew the pickup coil screws and take off the coils [B] with the grommet.

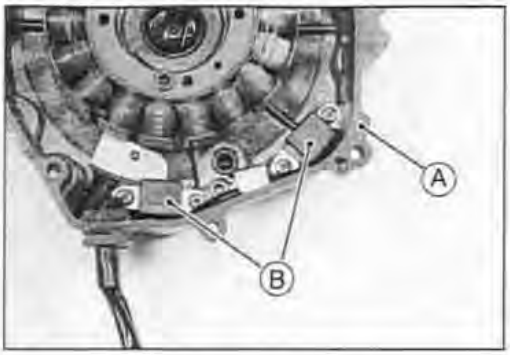

Pickup Coil Installation

- Install the pickup coils as shown.
  Pickup Coil [A] with shorter leads (BK and BK/Y) for #1 (front)
  Pickup Coil [B] with longer leads (BK/W and BK/R) for #2 (rear)
- Apply silicone sealant to the pickup coil lead grommet [C] and fit the grommet into the notch of the alternator cover.
- Pull the alternator leads and pickup coil leads outside the alternator cover, and **reduce slack of leads in the cover as possible** in order to prevent contact with the rotor (see Alternator Outside Stator Installation).
  Alternator Lead Grommet [D]

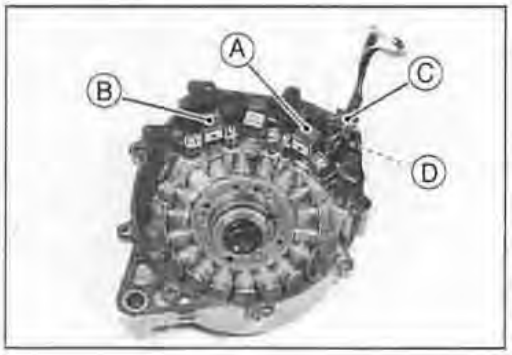

Pickup Coil Inspection

- Remove the alternator outer cover (see this chapter).
- Remove all the spark plug caps but do not remove the spark plugs.
- Disconnect the pickup coil lead connector.
- Connect a commercially available peak voltage adapter [A] to the hand tester [B].

Recommnded Tool: Peak Voltage Adapter
Type: KEK-54-9-B
Brand: KOWA SEIKI

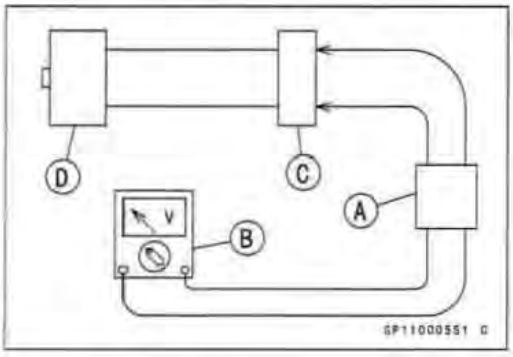

- Insert the adapter probes into the connector [C] of the pickup coil [D] as shown.

Special Tool - Hand Tester: 57001-1394

Connections:

	Adapter (R, +)		Adapter (BK, −)
Front Pickup Coil:	**BK/Y**	—	**BK**
Rear Pickup Coil:	**BK/R**	—	**BK/W**

NOTE

Be sure the battery is fully charged.

Hand Tester Range: × DC 10 V

- Turn the ignition switch and the engine stop switch ON.
- Pushing the starter button, turn the engine 4 ~ 5 seconds with the transmission in neutral to measure the pickup coil peak voltage.
- Repeat the measurements 5 or more times for one pickup coil.

Pickup Coil Peak Voltage
Standard: 2 V or more

- Repeat the test for the other pickup coil.

★ If the reading is less than the specified value, replace the pickup coil.
★ If the peak voltage adapter is not available, the coil can be checked for a broken or badly shorted winding with the hand tester (special tool).

NOTE

Using the peak voltage adapter is a more reliable way to determine the condition of the pickup coil than pickup coil internal resistance measurements.

Ignition System

- Disconnect the pickup coil lead connector.
- Set the hand tester [A] to the × 100 Ω range and connect it to the pickup coil lead connector [B].

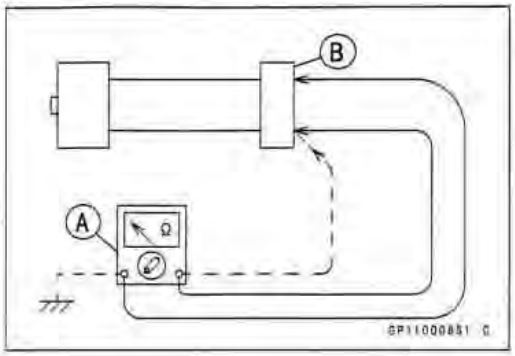

Connections:

	Tester Connections		
Front Pickup Coil:	**BK/Y**	—	**BK**
Rear Pickup Coil:	**BK/R**	—	**BK/W**

★ If there is more resistance than the specified value, the coil has an open lead and must be replaced. Much less than this resistance means the coil is shorted, and must be replaced.

Pickup Coil Resistance: **380 ~ 560 Ω**

- Using the highest resistance range of the tester, measure the resistance between the pickup coil leads and chassis ground.

★ Any tester reading less than infinity (∞) indicates a short, necessitating replacement of the pickup coil assy.

IC Igniter Inspection

- Remove the right side cover (see Frame chapter).
- Remove the coolant reserve tank.
- Pull the connectors out of the IC igniter [A].
- Remove the IC igniter.

Front [B]



- To check the condition of the IC igniter, connect the igniter checker to the IC igniter as shown.

Special Tools - Igniter Checker Assembly: 57001-1378 [A]
Harness Adapter #12: 57001-1397 [B]
Harness Adapter #3: 57001-1383 [C]

IC igniter [D]
Battery [E]

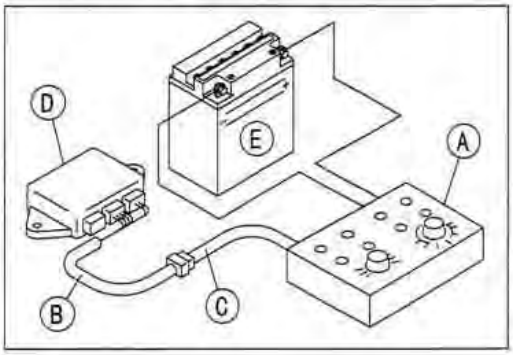

Turn the select knob to "D" position.

NOTE

When using the igniter checker, refer to the manufacturer's instructions.
The igniter checker can detect the simulated dynamic characteristics: igniter response to r.p.m., interlock circuit signal, tachometer signal and engine overspeed limiter signal.
The igniter checker cannot inspect the condition of the CDI unit.

★ If the condition of the IC igniter is abnormal, replace the IC igniter.

★ If the igniter checker is not available, replace the IC igniter with a new one and check ignition coil primary peak voltage again. If the peak voltage is abnormal as before, the trouble is not with the IC igniter. Trouble may be caused by other ignition system parts or engine ti self. If the peak voltage is now normal, the trouble is with the IC igniter. Replace the IC igniter.

IC Igniter Troubleshooting

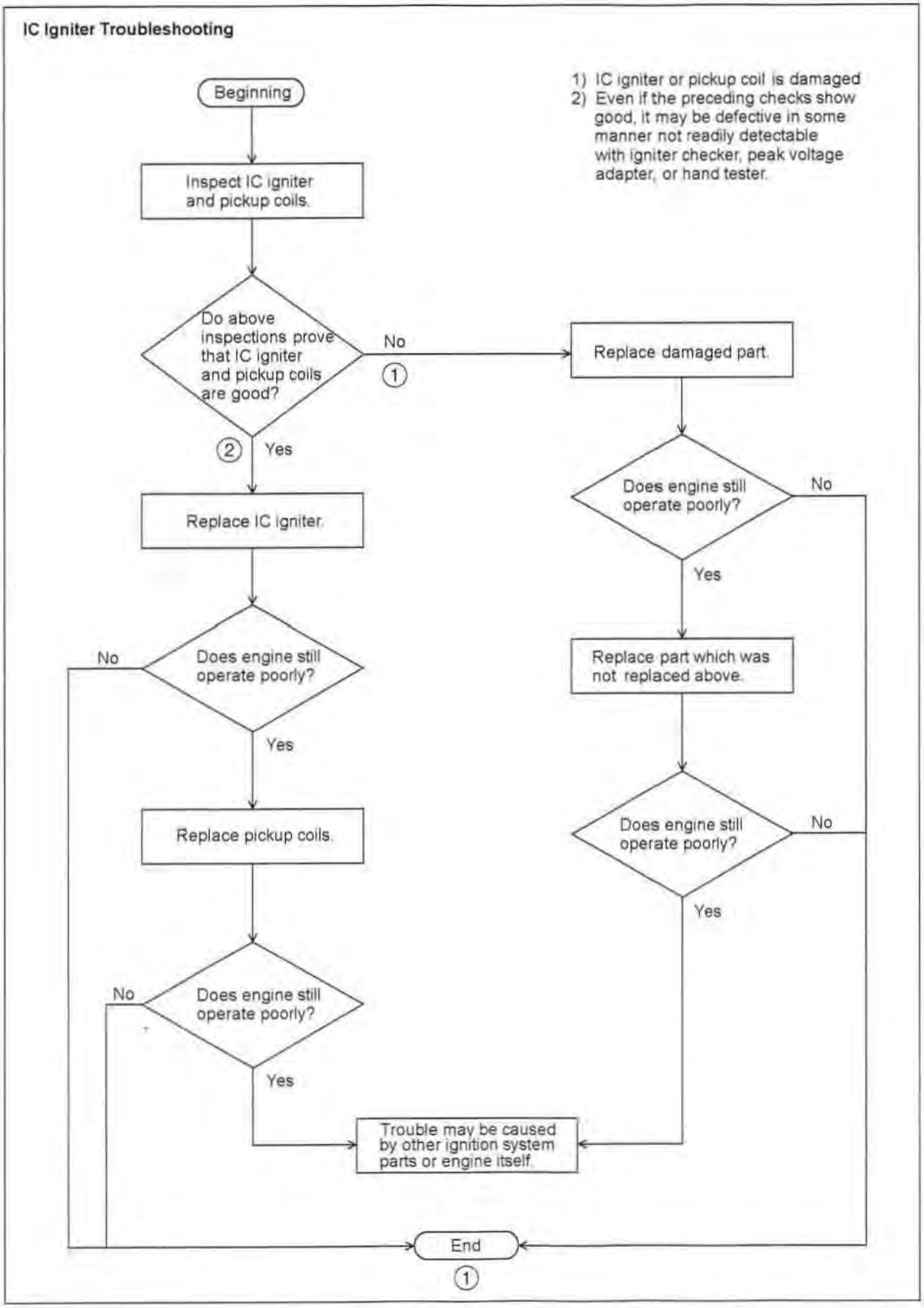

Starter Motor

Removal

- Unscrew the bracket bolts [A] and hang down the regulator/rectifiers [B] with its bracket.

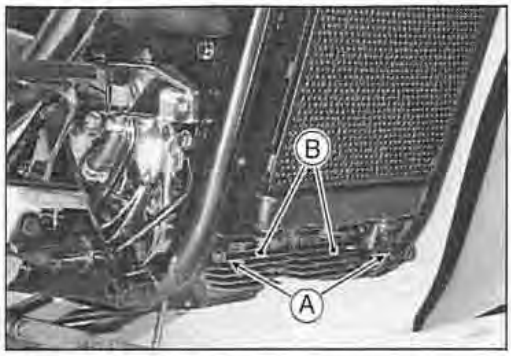

- Remove:
  Starter Motor Terminal Nut and Lead [A]
  Starter Motor Bolts [B]

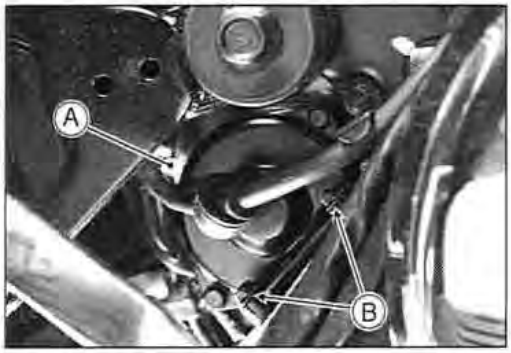

- Pull the starter motor [A] toward the left and remove it.

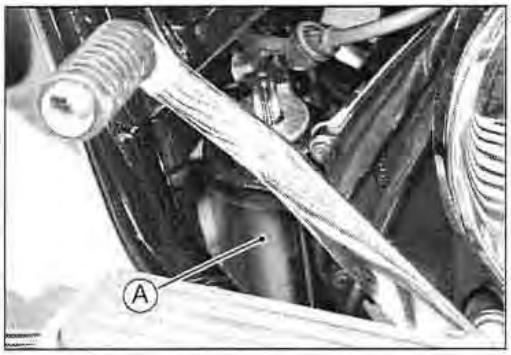

Installation

CAUTION
Do not tap the starter motor shaft or body. Tapping the shaft or body could damage the motor.

- When installing the starter motor, clean the starter motor legs [A] and crankcase [B] where the starter motor is grounded.

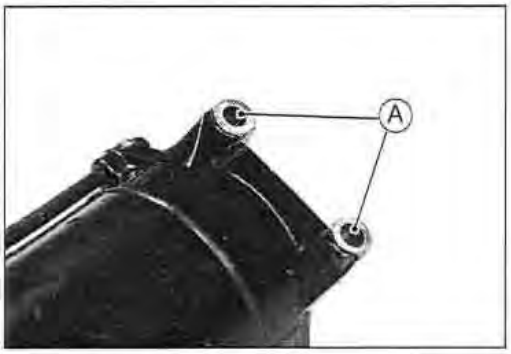

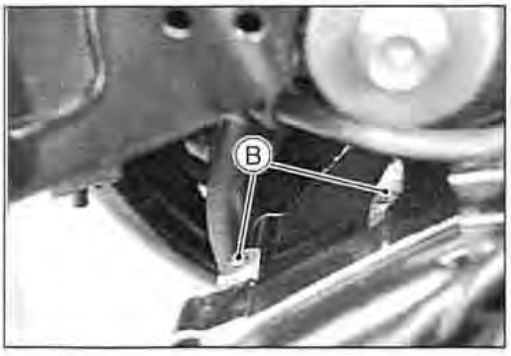

Starter Motor

- Replace the O-ring [A] with a new one.
- Apply a small amount of engine oil to the O-ring.

Torque - Starter Motor Mounting Bolts: 9.8 N·m (1.0 kg·m, 87 in·lb)
Starter Motor Terminal Nut: 4.9 N·m (0.50 kg·m, 43 in·lb)

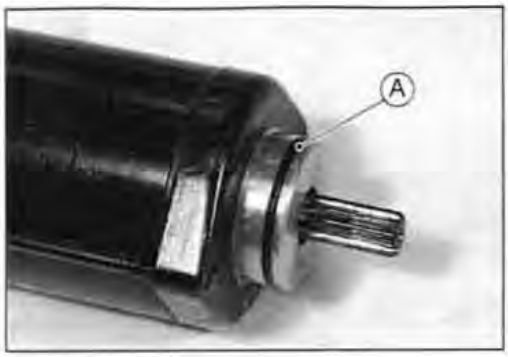

Disassembly

- Remove the starter motor (see this section).
- Take off the starter motor assy bolts [A] and remove both end covers [B] and pull the armature out of the yoke.

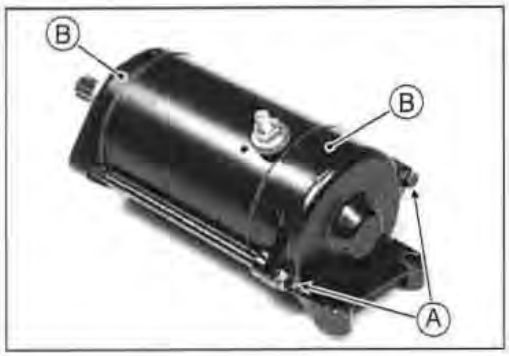

- Take the positive carbon brushes [B] out of the brush holders [A].
- Take off the brush plate [C] with brush wire from the yoke.

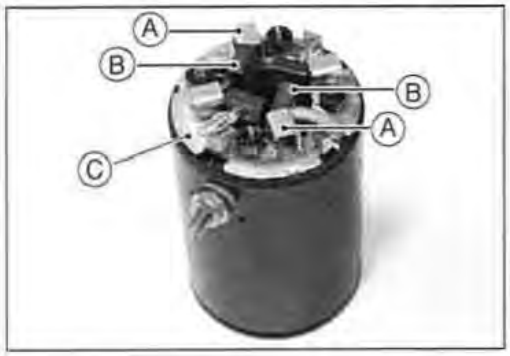

- Unscrew the terminal locknut [B] and remove the terminal bolt [A].
- Take the positive carbon brushes and wire assy [C] out of the yoke.

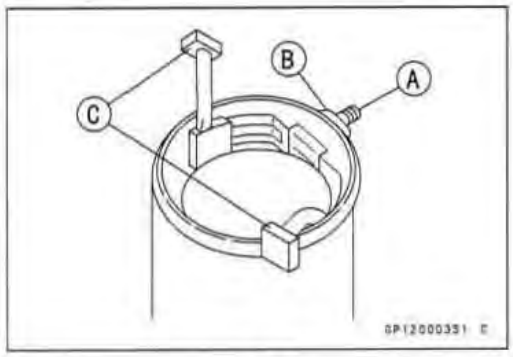

NOTE

Do not remove the negative carbon brushes [A] from the brush plate [B].

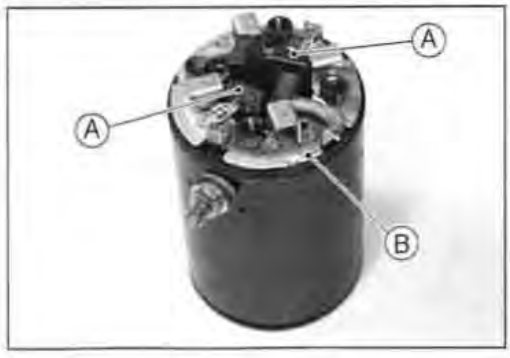

Starter Motor

Assembly

- Holding the springs [A] with plastic washers [B], insert the brushes.
- Fit the brush lead into the holder groove.
- Align the tongue [C] with the terminal bolt [D].

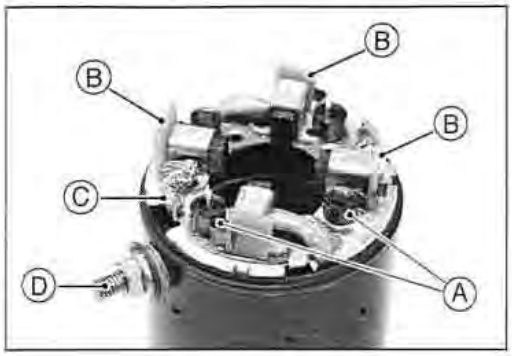

- Put the armature [A] among the brushes, and remove the plastic washers [B].

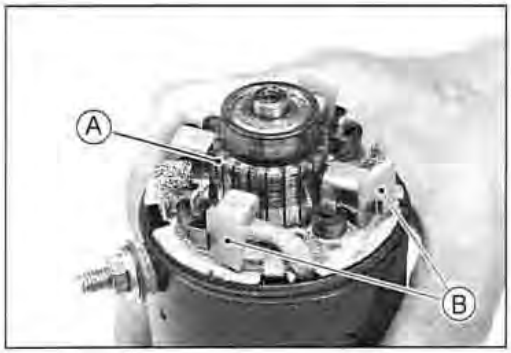

- Fit the tongue [A] of the brush plate into the end cover groove [B].

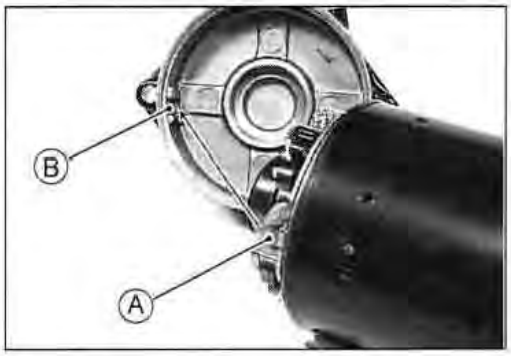

- Apply thin coat of a grease to the oil seal [B] in the left end cover [A].

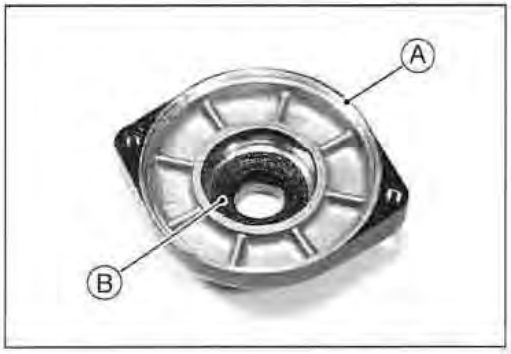

- Apply a thin coat of grease to the left bearing [A].
- Fit shims onto the right end cover.



Starter Motor

○ The line on the yoke should align [A] with the line on the right cover.

Torque - Starter Motor Assy Bolts: 4.9 N·m (0.50 kg·m, 43 in·lb)

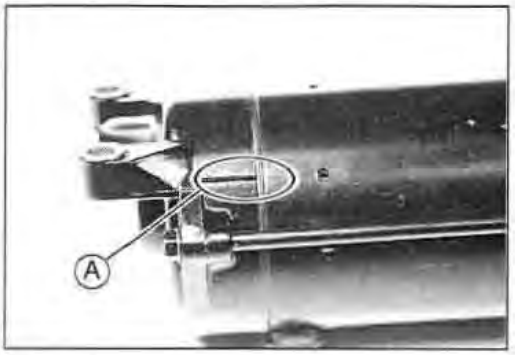

Brush Inspection

● Measure the length [A] of each brush.

★ If any is worn down to the service limit, replace the carbon brush holder assy [B] and the terminal bolt assy [C].

Starter Motor Brush Length

Standard: 12 mm

Service Limit: 8.5 mm

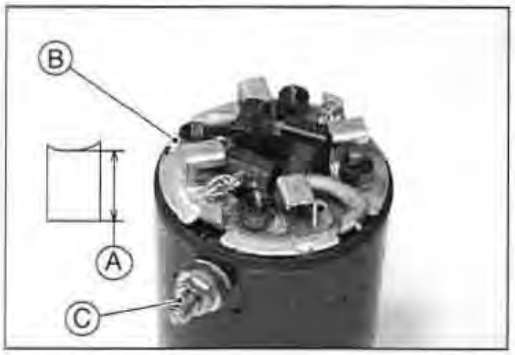

Commutator Cleaning and Inspection

● Smooth the commutator surface [A] if necessary with fine emery cloth [B], and clean out the grooves.

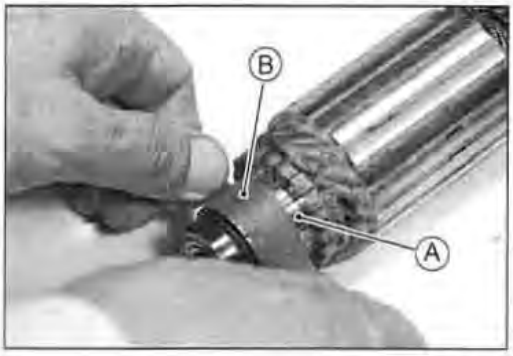

● Measure the diameter [A] of the commutator [B].

★ Replace the starter motor with a new one if the commutator diameter is less than the service limit.

Commutator Diameter

Standard: 28 mm

Service Limit: 27 mm

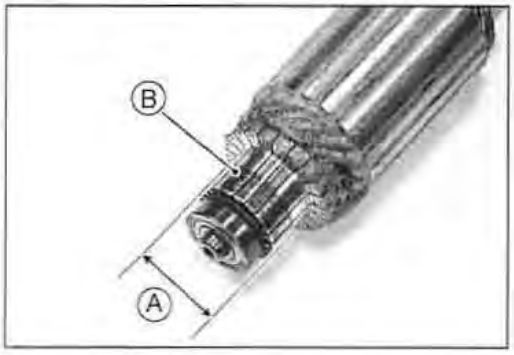

Starter Motor

Armature Inspection

- Using the × 1 Ω hand tester range, measure the resistance between any two commutator segments [A].

★ If there is a high resistance or no reading (∞) between any two segments, a winding is open and the starter motor must be replaced.

- Using the highest hand tester range, measure the resistance between the segments and the shaft [B].

★ If there is any reading at all, the armature has a short and the starter motor must be replaced.

Special Tool - Hand Tester: 57001-1394

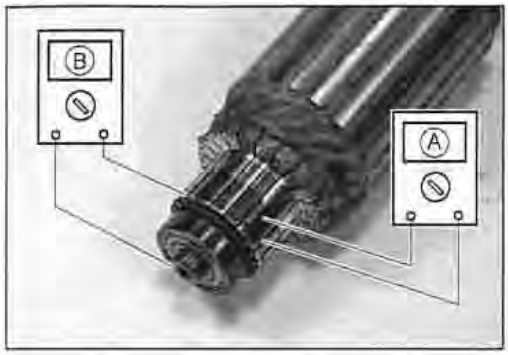

NOTE

Even if the foregoing checks show the armature to be good, it may be defective in some manner not readily detectable with the hand tester. If all other starter motor components and starter motor circuit components check good, but the starter motor still does not turn over or only turns over weakly, replace the starter motor with a new one.

Brush Lead Inspection

- Using the × 1 Ω hand tester range, measure the resistance as follows.
  Terminal Bolt and Positive Brushes [A]
  Brush Plate and Negative Brushes [B]
  Plastic Insulator [C]
- The reading should be zero.

★ If there is not close to zero ohms, the brush lead has an open. Replace the terminal bolt assembly and/or the brush holder assembly.

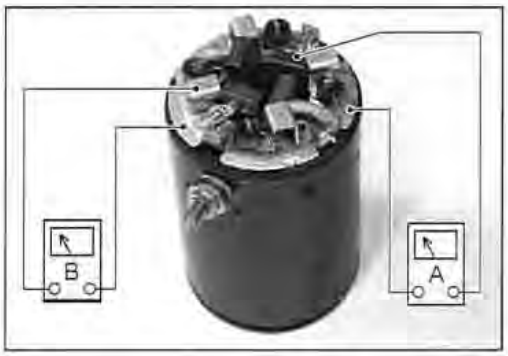

Brush Plate and Terminal Bolt Inspection

- Using the highest hand tester range, measure the resistance as shown.
  Terminal Bolt and Brush Plate [A]
  Terminal Bolt and Negative Brush Holders [B]
  Terminal Bolt and Yoke [C]
- The reading should be infinite (∞ Ω).

★ If there is any reading, the brush holder assembly and/or terminal bolt assembly have a short. Replace the brush holder assembly and the terminal bolt assembly.

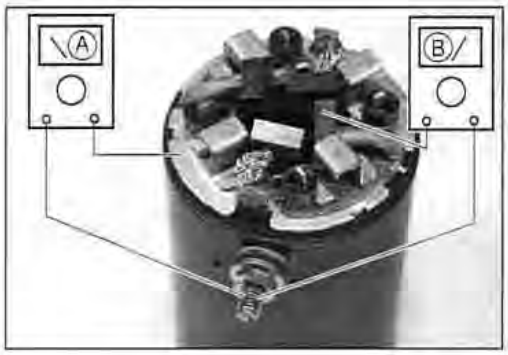

Starter Relay Inspection

- Remove the right side covers (see Frame chapter).
- Remove the coolant reserve tank, then the starter relay.
- Connect the hand tester [A] and 12 V battery [B] to the starter relay [C] as shown.

★ If the relay does not work as specified, the relay is defective. Replace the relay.

Testing Relay

Tester Range:	**× 1 Ω range**
Criteria:	**When battery is connected — 0 Ω**
	When battery is disconnected — ∞ Ω

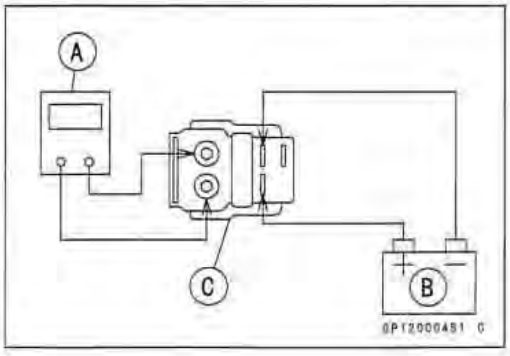

Starter Motor

Electric Starter Circuit

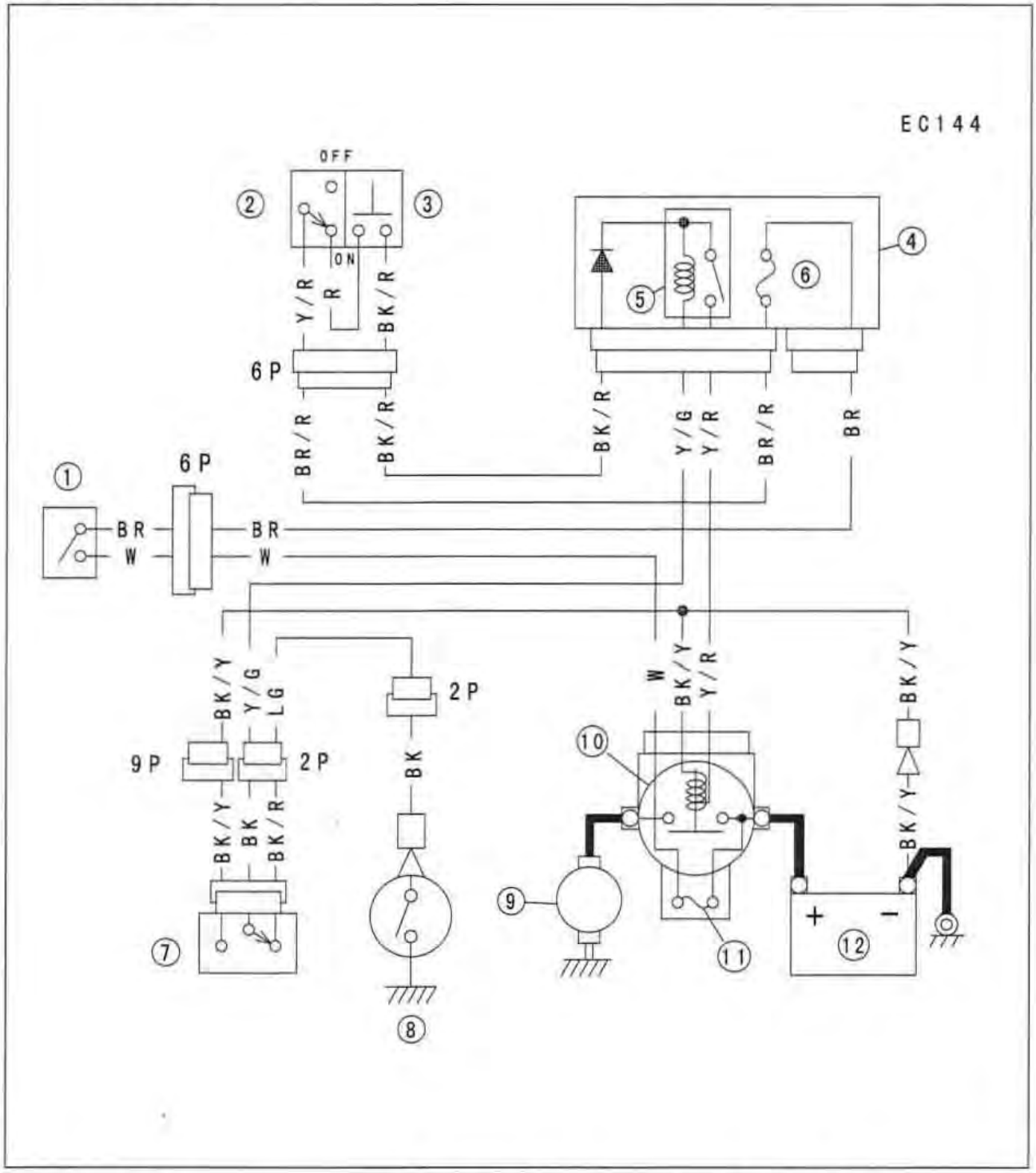

1. Ignition Switch
2. Engine Stop Switch
3. Starter Button
4. Junction Box
5. Starter Circuit Relay
6. Ignition Fuse 10 A
7. Starter Lockout Switch
8. Neutral Switch
9. Starter Motor
10. Starter Relay
11. Main Fuse 30 A
12. MF Battery

Lighting System

US, Canada, and Australia models have a full-time headlight system with a headlight relay in the junction box. In these models, the headlight does not go on when the ignition switch and the engine stop switch are first turned on. The headlight comes on when the engine starts running and stays on even if the engine stalls. The headlight goes out when the ignition switch is turned off. It also goes out while the starter button is depressed.

Headlight Beam Horizontal Adjustment

- Turn the horizontal adjuster [A] on the headlight with a screwdriver in or out until the beam points straight ahead.
- Turn the adjuster clockwise to face the headlight to the left.



Headlight Beam Vertical Adjustment

- Turn the vertical adjuster [B] in the headlight in or out with a screwdriver to adjust the headlight vertically.
- Turn the adjuster clockwise to face the headlight up.

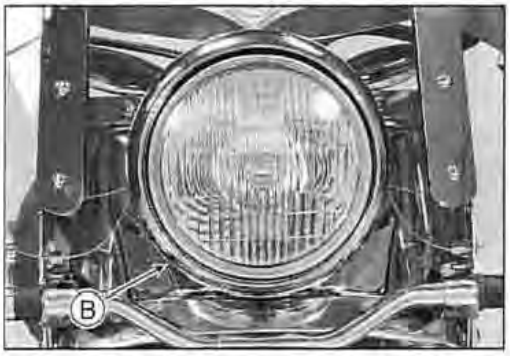

NOTE

- *ON high beam, the brightest points should be slightly below horizontal with the motorcycle on its wheels and the rider seated. Adjust the headlight to the proper angle according to local regulations.*
- *For US model, the proper angle is 0.4 degrees below horizontal. This is 50 mm (2 in.) drop at 7.6 m (25 ft.) measured from the center of the headlight with the motorcycle on its wheels and the rider seated.*

50 mm (2 in.) [A]
Center of Brightest Spot [B]
7.6 m (25 ft.) [C]

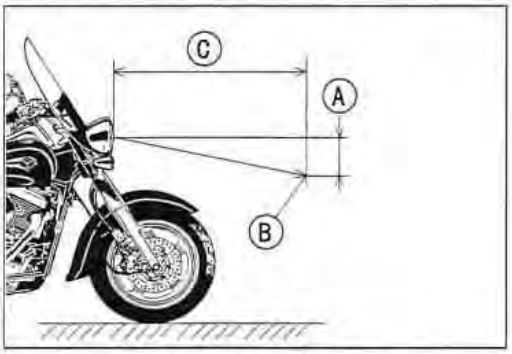

Headlight Bulb Replacement

- Remove the headlight rim screws [A] on both sides.



Lighting System

- Pull the headlight unit and drop it out.
- Pull the headlight connector [A].
- Remove the headlight dust cover [B].
- Push the hook [C] to unlock.

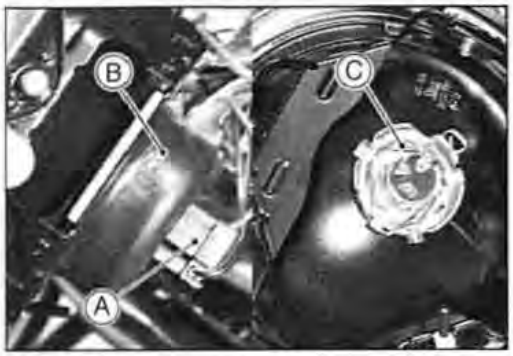

- Take out the bulb [A].



CAUTION

When handling the quartz-halogen bulb [A], never touch the glass portion with bare hands. Always use a clean cloth. Oil contamination from hands or dirty rags can reduce bulb life or cause the bulb to explode.

□ Clean off any contamination that inadvertently gets on the bulb with alcohol or a soap and water solution.

- Replace the headlight bulb.
- Fit the dust cover [A] with the TOP mark [B] upward onto the bulb [C] firmly as shown.
- Tighten:

Torque - Headlight Rim Screws: 1.0 N·m (0.10 kg·m, 9 in·lb)

- After installation, adjust the headlight aim (see this chapter).
  Good [D]
  Bad [E]

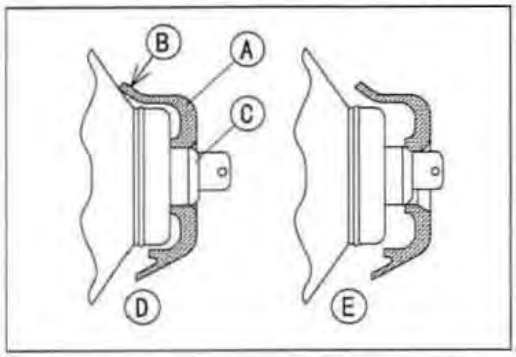

Headlight Body Removal

- Remove the headlight rim screws [A].
- Pull the headlight unit and drop it out.

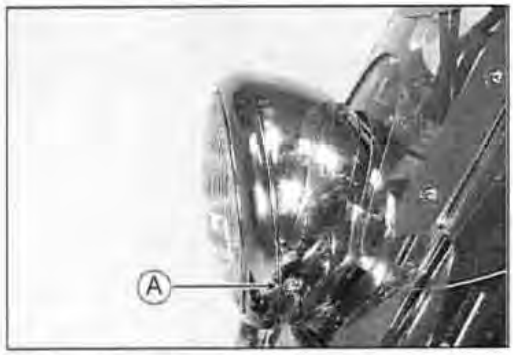

- Disconnect the wiring connectors [A].
- Remove the headlight body bolts and nuts [B], then take off the body [C].

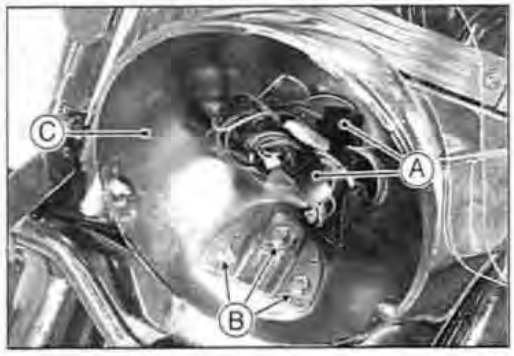

Lighting System

Tail/Brake Light Bulb Replacement

- Take out the screws [A] in the taillight lens.
- Pull the lens off.

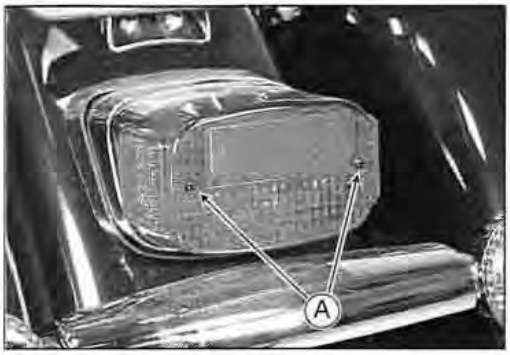

- Push the bulb in [A], turn it counterclockwise [B], and pull it out.
- Replace the bulb with a new one.



- With the front pin [A] up and the rear pin [B] down, insert the new bulb by aligning the front pin with the groove in the walls of the socket [C].
- Push the bulb in, turn it clockwise, and release it. It should lock in position.
- Tighten the lens screws. Be careful not to overtighten them.



Lighting System

Headlight Circuit (Except for Australia, Canada, Malaysia, and U.S.)

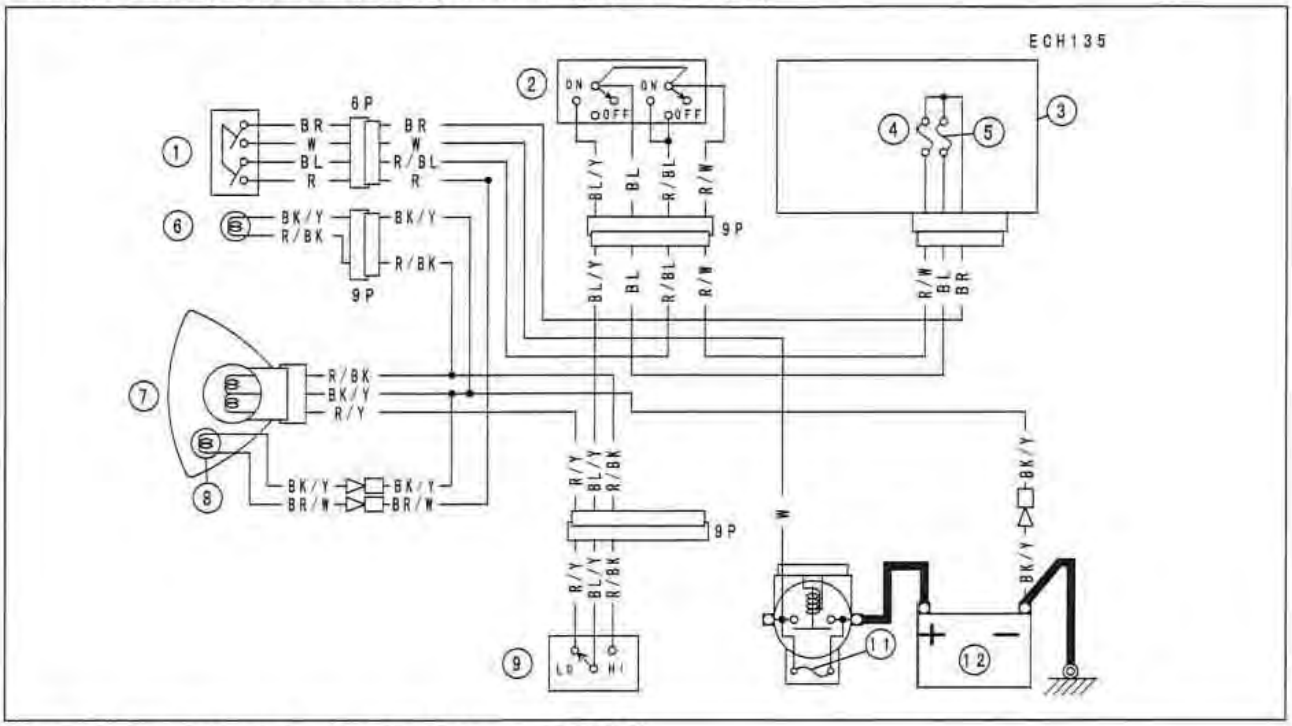

Headlight Circuit (Australia, Canada, Malaysia, and U.S.)

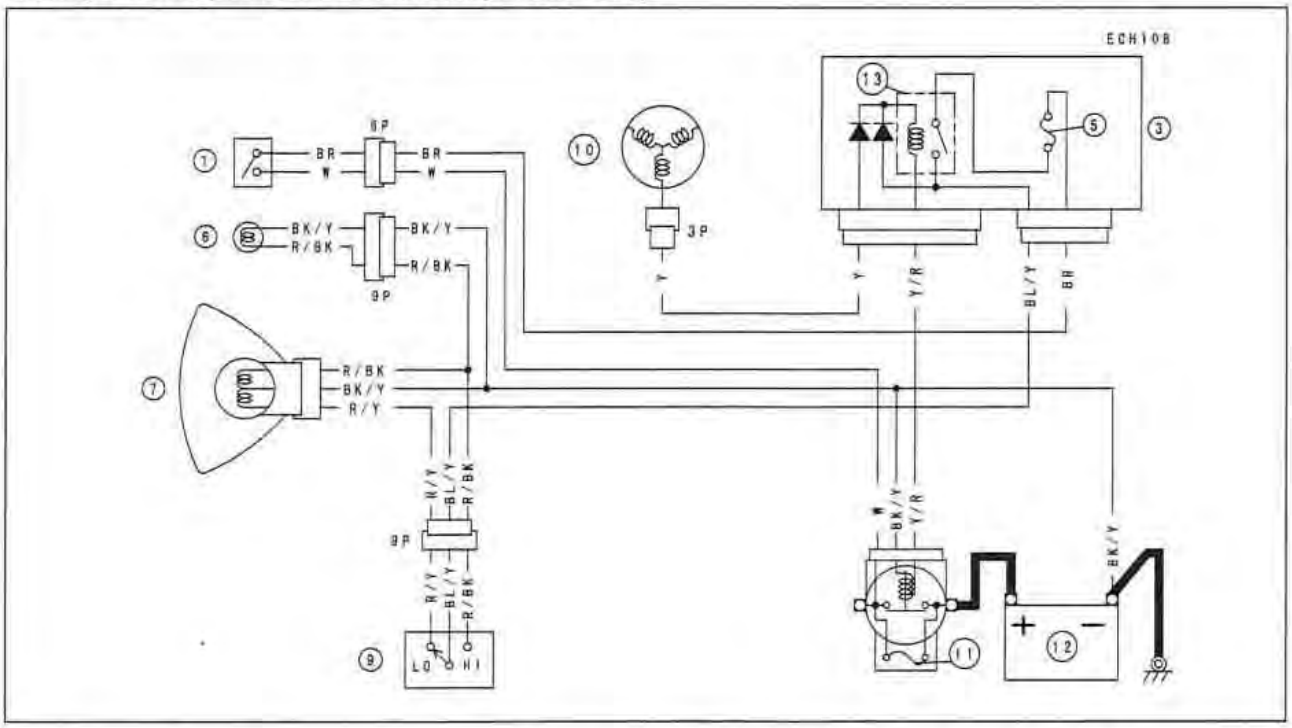

1. Ignition Switch
2. Headlight Switch
3. Junction Box
4. Taillight Fuse 10 A
5. Headlight Fuse 10 A
6. High Beam Indicator Light
7. Headlight
8. City Light
9. Dimmer Switch
10. Outside Alternator
11. Main Fuse 30 A
12. Battery
13. Headlight Relay

Automatic Turn Signal Cancelling System

Automobiles use a turn signal cancelling system actuated by steering wheel turn. But, motorcycles turn with a bank additionally, and so have a smaller steer angle. This makes difficult to adopt an automobile type turn signal cancelling system because of inaccurate operation in motorcycles. So, motorcycles adopt time & distance counting system.

The cancelling system consists of a battery, turn signal control unit, distance sensor, and turn signal switch. When the turn signal switch is pushed onto the right or left, the turn signals start flashing and the control unit starts counting off **8 seconds**. At the end of this time, the control unit starts caluculating distance traveled using pulses from the distance sensor in the speedometer. When the motorcycle has traveled an additional **65 meters**, the control unit shuts off the current and turns off the turn signal lights. The turn signal switch lever is returned to the neutral position by spring force.

★ If the turn signal cancelling system does not function properly, first check all the wiring connections carefully.

- Secondly, inspect the distance sensor.
- Thirdly, inspect the turn signal switch in the left handlebar switch.
- Lastly, check the turn signal control unit.

Turn Signal Cancelling System

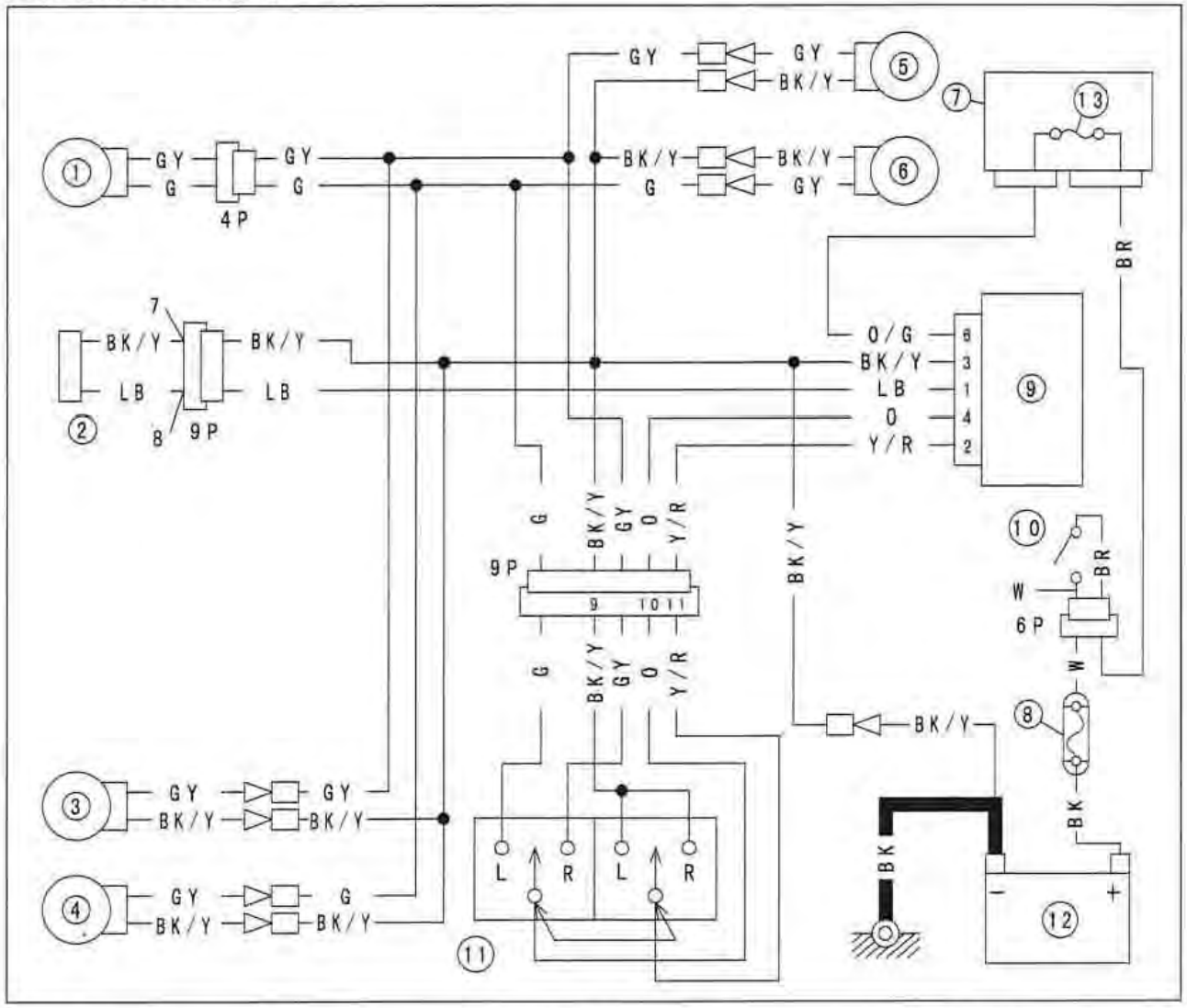

1. Turn Signal Indicator Light
2. Distance Sensor
3. Front Right Turn Signal Light
4. Front Left Turn Signal Light
5. Rear Right Turn Signal Light
6. Rear Left Turn Signal Light
7. Junction Box
8. Main Fuse 30 A
   in Starter Relay
9. Turn Signal Control Unit
10. Ignition Switch
11. Turn Signal Switch
12. Battery
13. Turn Signal Control
    Unit Fuse 10 A

Automatic Turn Signal Cancelling System

Wiring Inspection

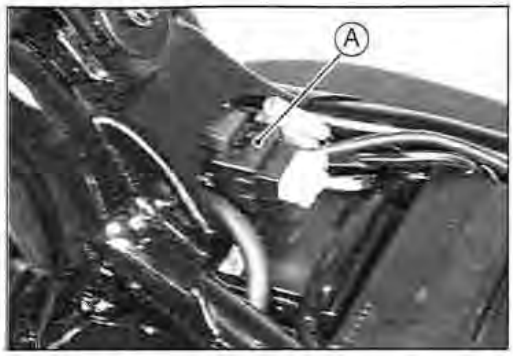

- Connect all the connectors.
- Remove the front seat (see Frame chapter).
- Remove the turn signal control unit [A].
- Pull off the 6-pin connector of the unit, the 9-pin meter connector under the meter unit, and the 9-pin left handlebar switch connector in the head light housing.
- Make sure all connector terminals are clean and tight, and none of them have been bent.

★ Clean the dirty terminals, and straighten slightly-bent terminals.

- Check conductivity of the numbered terminals with the hand tester.

The terminal numbers are shown in the wiring diagram of Turn Signal Cancelling System.

Special Tool - Hand Tester: 57001-1394

Wiring Inspection

Connectors	Tester Connection	Tester Reading (Ω)
Turn Signal Control Unit	1 – 8	0
– Distance Sensor	3 – 7	
Turn Signal Control Unit	2 – 11	
– Left Handlebar Switch	3 – 9	
	4 – 10	

Distance Sensor Inspection

- Remove the meter unit (see this chapter) and disconnect the white 9-pin connector [A] from the speedometer.
- Remove the speedometer cable lower end [B] from the speedometer gear housing of the front wheel.
- Set the hand tester to the 1 Ω range.
- Connect the hand tester [C] across the distance sensor leads (LB and BK/Y leads), and check the continuity as follows.
- Turning [D] the speedometer inner cable slowly, count how many times the sensor shows continuity. The hand tester should show continuity and then open four times per revolution.

1 turn [E]

★ If it does not, replace the speedometer.

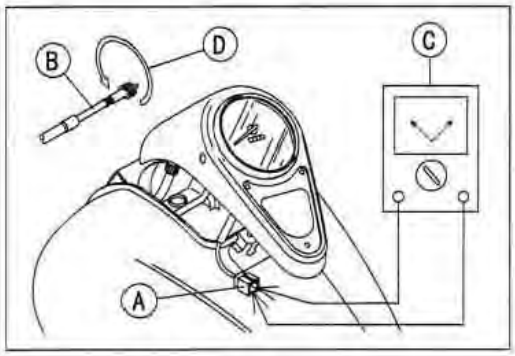

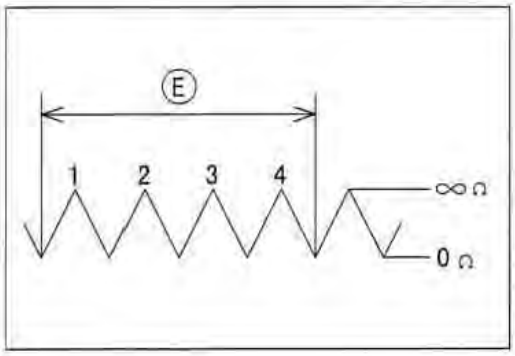

Automatic Turn Signal Cancelling System

Turn Signal Switch Inspection

- Open the headlight housing.
- Unplug the 9-pin connectors that leads to the left handlebar switch.
- Check the turn signal switch connections according to the table.

★ If the switch has an open circuit or a short, it can be disassembled for repair. The contact surfaces may be cleaned, but no internal parts are available for replacement.

★ If any parts are not repairable, the left handlebar switch must be replaced as a unit.

Turn Signal Switch Connections

Color	G	O	GY	BK/Y	Y/R
L (left)	●	●		●	●
OFF (push)					
R (right)		●	●	●	●

Turn Signal Control Unit Inspection

- Remove the front seat (see Frame chapter).
- Connect one 12 V battery and turn signal lights as indicated in the figure, and count how many times the lights flash for one minute.
  Turn Signal Control Unit Connector [A]
  Turn Signal Lights [B]
  12 V Battery [C]

★ If the lights do not flash as specified, replace the turn signal control unit.

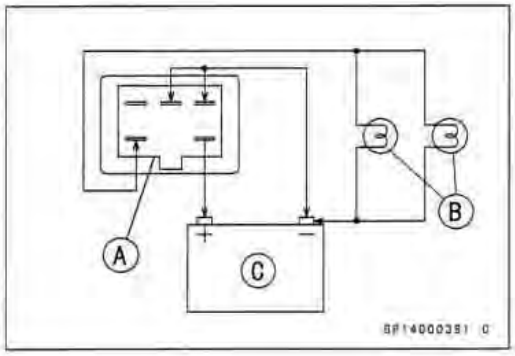

Testing Turn Signal Control Unit Inspection

Load		
The Number of Turn Signal Lights	Wattage (W)	Flashing Times (c/m*)
1**	21 ~ 23	140 ~ 250
2	42 ~ 46	75 ~ 95

(*): Cycle(s) per minute
(**): corresponds to "one light burned out".

NOTE

Even if the foregoing checks show the turn signal control unit to be good, it may be defective in some manner especially for automatic turn signal cancelling operation not readily detectable with above checks. If all other checks are good, replace the turn signal control unit.

Turn Signal Light Bulb Replacement

- Remove the turn signal light screws [A] and take off the lens [B].

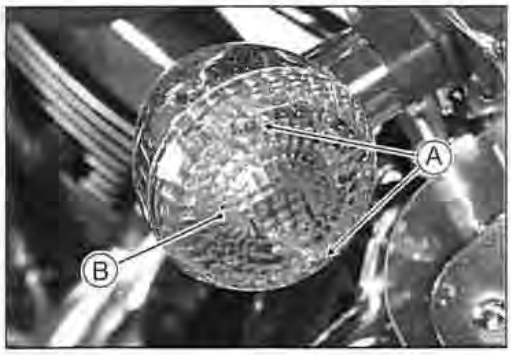

Automatic Turn Signal Cancelling System

- Push the bulb [A] in the socket and turn the bulb counterclockwise [B].
- Replace the bulb.
- With the rear pin [C] up and the front pin [D] down, insert the new bulb by aligning the rear pin with the groove in the walls of the socket [E].

Torque - Turn Signal Light Screws: 1.0 N·m (0.10 kg·m, 9 in·lb)

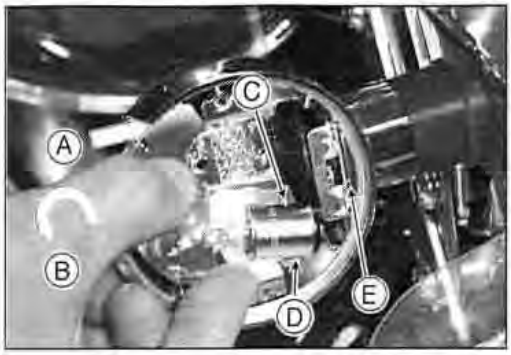

Fuel Pump

The fuel pump [A] operates when the starter button is pushed on or the engine is running.
When fuel level in the float chamber is low, the fuel pump operates to supply fuel into the float chamber. When the fuel reaches a certain level, the fuel pressure rises, and the fuel pump stops.

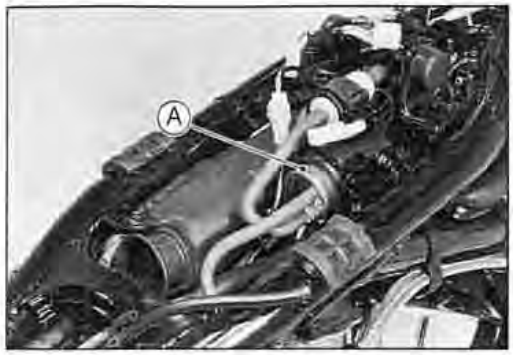

Removal/Installation

- Refer to the fuel system chapter.

Internal Resistance

- Remove the fuel tank (see Fuel System chapter).
- Disconnect the fuel pump connector [A].
- Set the hand tester to the × 1 kΩ range and make the measurements shown in the table.

Special Tool - Hand Tester: 57001-1394

★ If the tester readings are not as specified, replace the fuel pump.
★ If the tester readings are normal, check the fuel pump operation.

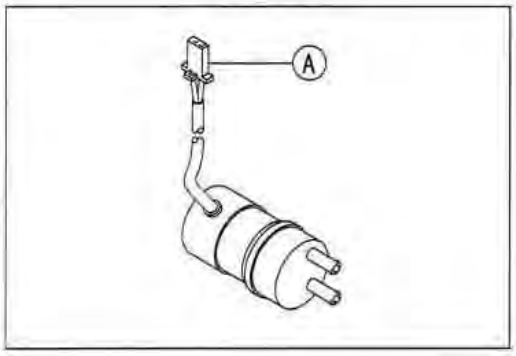

CAUTION

Use only Hand Tester 57001-1394 for this test. An ohmmeter other than the Kawasaki Hand Tester may show different readings.
If a megger or a meter with a large-capacity battery is used, the pump relay will be damaged.

Fuel Pump Internal Resistance

		Tester (+) Lead Connection		
		R	BK	Y
Tester (−) Lead Connection (*)	R	—	∞	∞
	BK	∞	—	∞
	Y	∞	More than 20 kΩ	—

(*): Tester (−) Lead Connection

Operation Check

- Remove the fuel pump with the fuel filter (see Fuel System chapter).
- Prepare a container filled with kerosene.
- Prepare rubber hoses, and connect them to the pump fittings.
- Connect a suitable pressure gauge to the outlet hose as shown.

Fuel Pump [A]
Pressure Gauge [B]
Outlet Hose [C]
Inlet Hose [D]
Fuel Filter [E]
Kerosene [F]
2-Pin Connector [G]
Battery [H]
Auxiliary Leads [J]

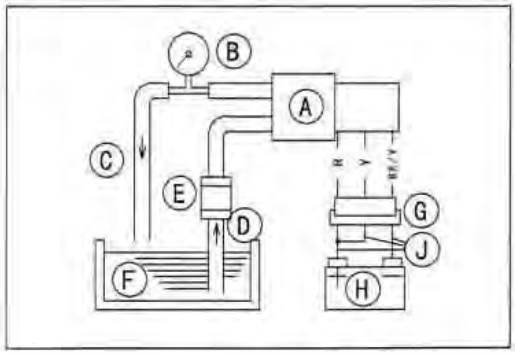

Fuel Pump

- Connect the pump leads to the battery using auxiliary wires as shown.
★ If the pump does not operate, the pump is defective.
★ If the pump operates, close the outlet hose while operating the fuel pump.
- When the pump stops, read the pressure gauge.
★ If the pressure gauge reading is out of the specified pressure, the pump is defective.

Fuel Pump Pressure
Standard: **14 ~ 19 kPa (0.14 ~ 0.19 kg/cm², 2.0 ~ 2.7 psi)**

Fuel Pump Circuit

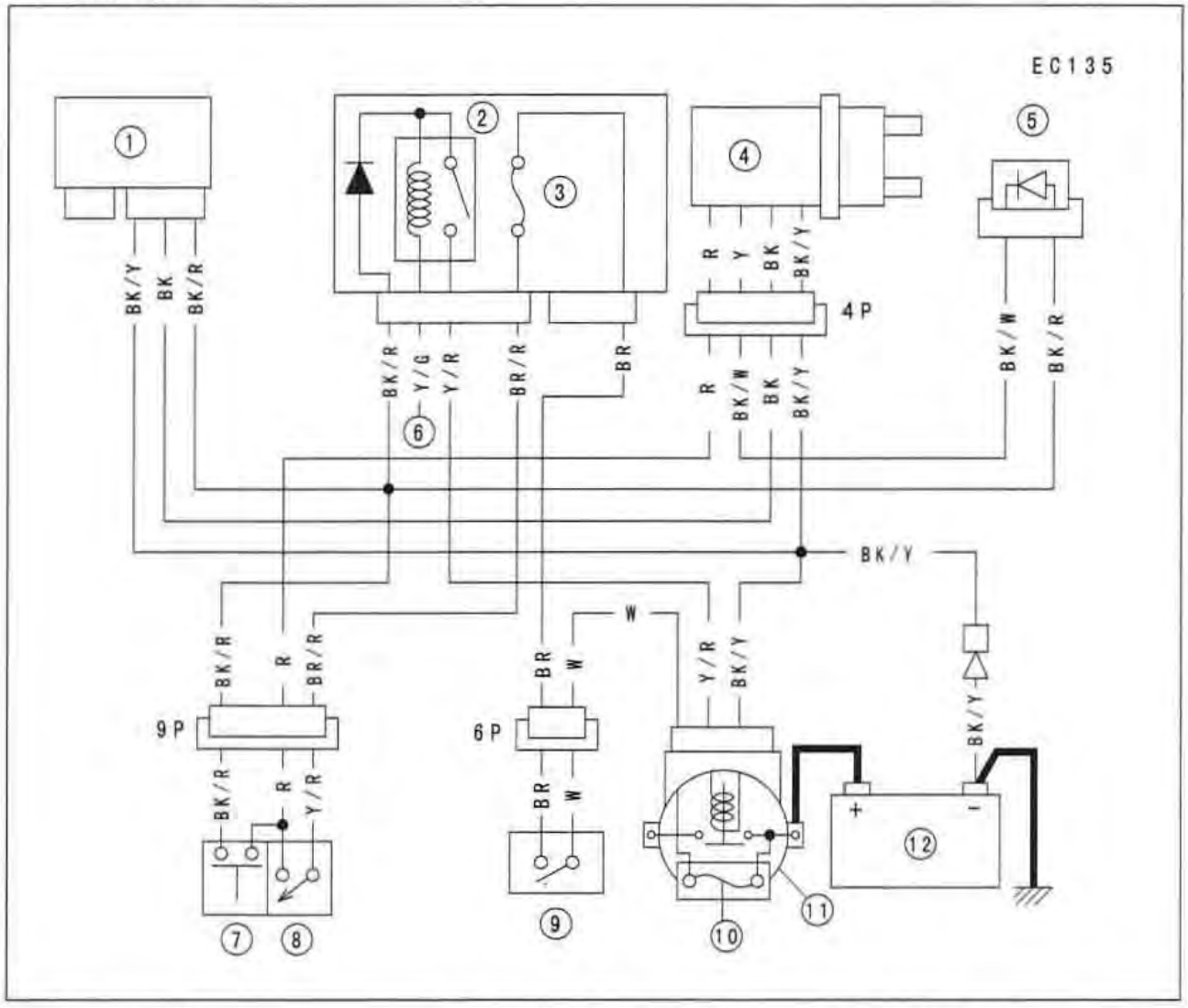

1. IC Igniter
2. Starter Circuit Relay in Junction Box
3. Ignition Fuse 10 A
4. Electric Fuel Pump
5. Fuel Pump Diode
6. Starter Lockout Switch
7. Starter Button
8. Engine Stop Switch
9. Ignition Switch
10. Main Fuse 30 A
11. Starter Relay
12. Battery

Radiator Fan System

⚠ WARNING

The radiator fan is connected directly to the battery. The fan may start even if the ignition switch is off. NEVER TOUCH THE RADIATOR FAN UNTIL THE RADIATOR FAN CONNECTOR IS DISCONNECTED. TOUCHING THE FAN BEFORE THE CONNECTOR IS DISCONNECTED COULD CAUSE INJURY FROM THE FAN BLADES.

Fan System Circuit Inspection

- Disconnect the leads from the radiator fan switch [A].
- Using an auxiliary wire [B], connect the radiator fan switch leads.

★ If the fan rotates, inspect the fan switch.

★ If the fan does not rotate, inspect the following.

Leads and Connectors
Main Fuse and Fan Fuse
Fan Motor
Front [C]

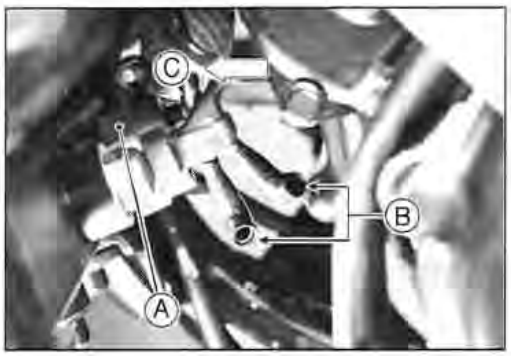

Fan Motor Inspection

- Remove the fuel tank (see Fuel System chapter).
- Disconnect the leads [A] from the radiator fan switch [B].
- Using an auxiliary wire [C], supply battery power to the fan motor.

★ If the fan does not rotate, the fan motor is defective and must be replaced.

Battery [D]

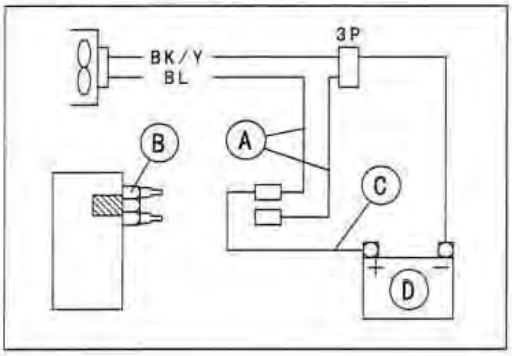

Radiator Fan Circuit

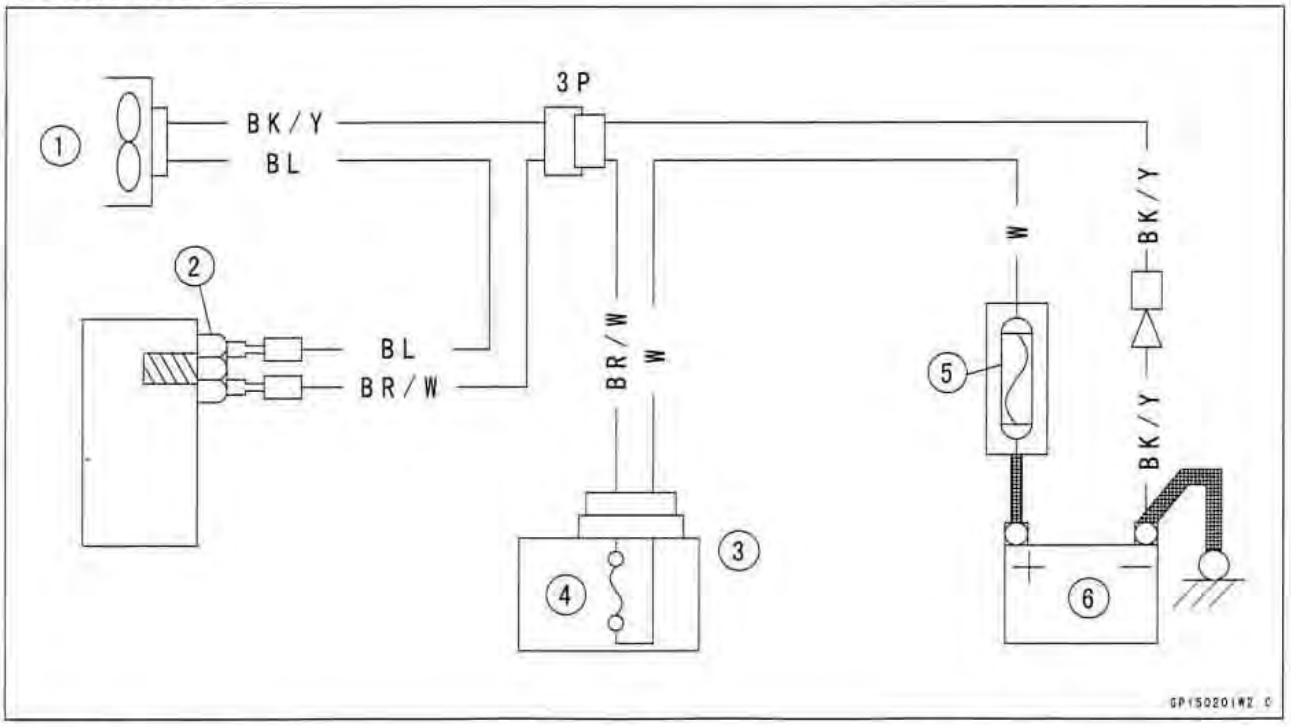

1. Radiator Fan
2. Radiator Fan Switch
3. Junction Box
4. Fan Fuse 10 A
5. Main Fuse 30 A
6. MF Battery

Oil Pressure Warning System

Motorcycle operation with low engine oil level, even if it is higher than the lower level line, will cause oil level change when sudden acceleration, or deceleration, and may lead flicker of the oil pressure warning light because of too rapid response of the oil pressure switch. To cope with this malfunction, the oil pressure light delay unit is adopted, which prevents flicker of the oil pressure warning light by delaying its lighting.

Oil Pressure Warning System

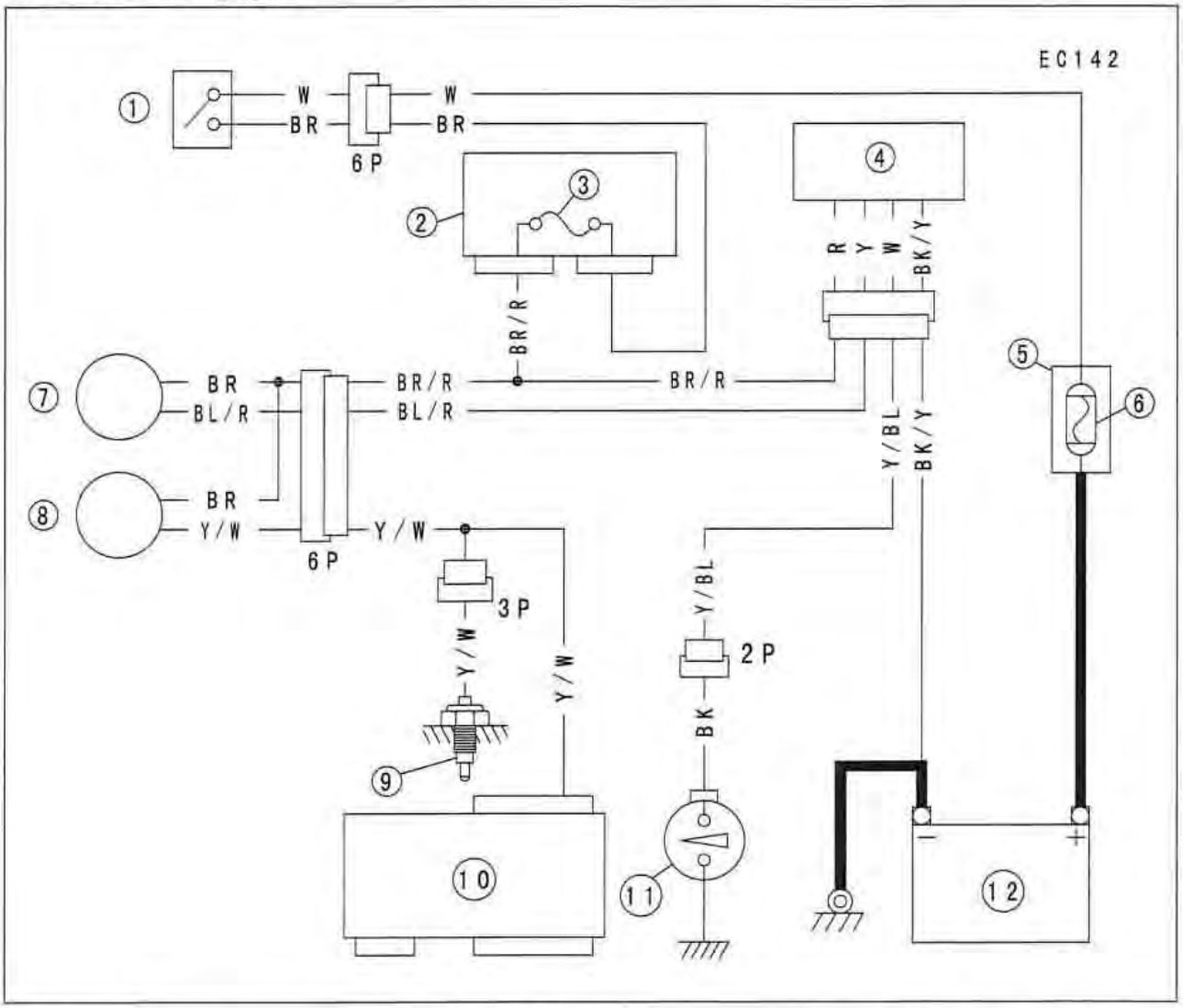

1. Ignition Switch
2. Junction Box
3. Ignition Fuse 10 A
4. Oil Pressure Light Delay Unit
5. Starter Relay
6. Main Fuse 30 A
7. Oil Pressure Warning Light
8. Water Temperature Warning Light
9. Water Temperature Switch
10. IC Igniter
11. Oil Pressure Switch
12. Battery

Oil Pressure Light Delay Unit Inspection

- Remove the right side cover (see Frame chapter).
- Remove the coolant reserve tank [A].
- Pull the connectors out of the oil pressure light delay unit [B].

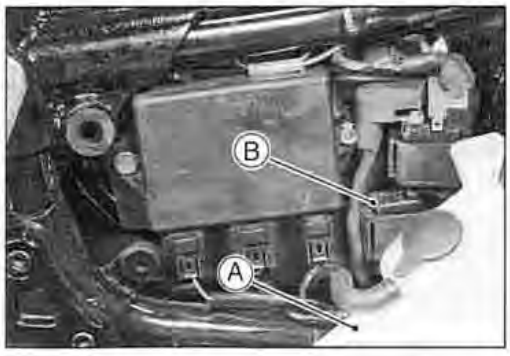

Oil Pressure Warning System

- Disconnect the lead [A] of the oil pressure switch [B] and ground [C] it to the engine, using an auxiliary wire.
- Turn the ignition switch [D] ON.

★ If the oil pressure warning light [E] is lit, replace the oil pressure switch.

★ If the warning light is not lit, check the warning light bulb and wiring.

★ If the light bulb and wiring are good, replace the oil pressure light delay unit [F].

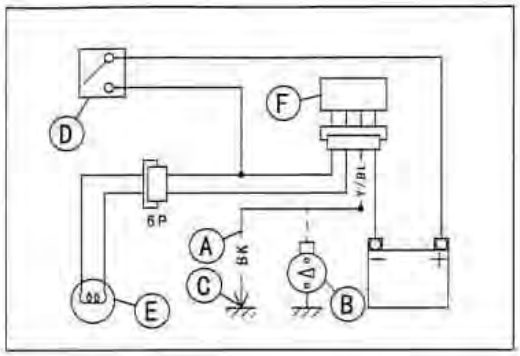

- Turn the ignition switch ON.
- Ground the oil pressure switch lead to the engine, then the oil pressure warning light should be lit with a delay.
- Measure this delay time from grounding of the switch lead to lighting of the warning light.

Lighting Delay Time

Standard: about 3 seconds

★ If the lighting delay time is out of the standard too far, replace the oil pressure light delay unit.

Meter, Gauge

Meter Unit Removal

- Remove the bolt [A], push the meter unit [B] forward a little, and take it off from the fuel tank.

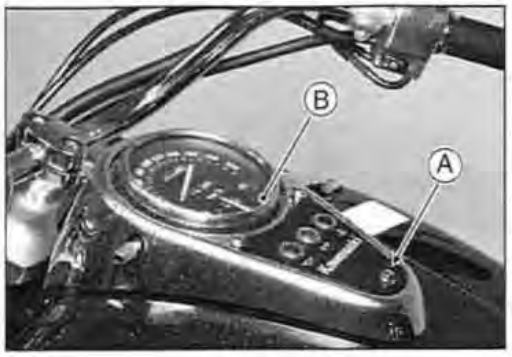

- Remove:
  Connectors [A]
  Speedometer Cable [B]

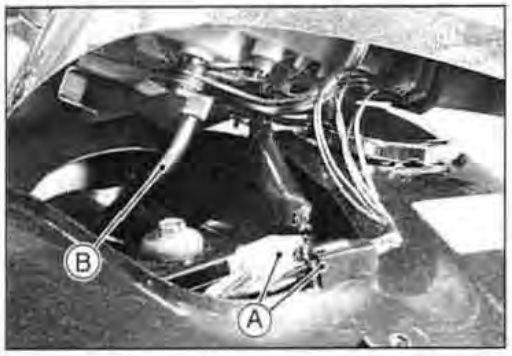

CAUTION

Place the meter so that the face is up. If a meter is left upside down or sideways for any length of time, it will malfunction.

Meter Unit Installation

- Insert the tongue [A] of the meter panel into the damper slit [B] of the fuel tank.

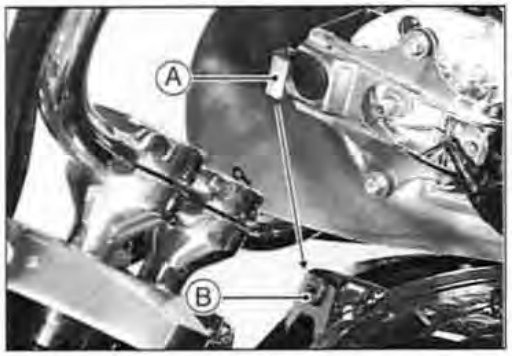

Meter Unit Disassembly

- Remove:
  Meter Unit (see this chapter)
  Screw [A] and Knob [B]
  Nuts [C]
  Speedometer [D]

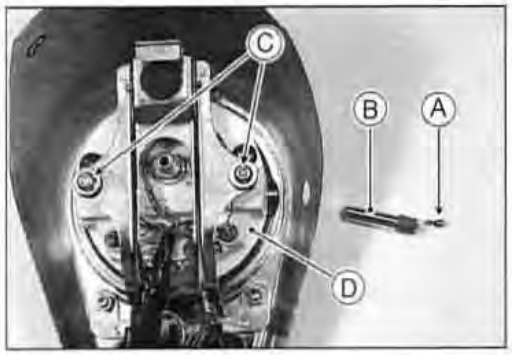

- To remove the wedge-base type bulb [A], pull the bulb out of the socket [B].

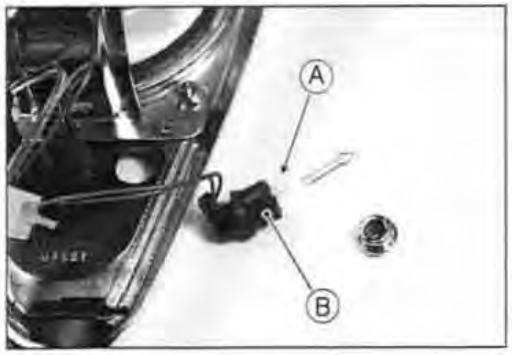

CAUTION

Do not turn the bulb. Pull the bulb out to prevent damage to the bulb. Do not use bulb rated for other than voltage or wattage specified in the wiring diagram.

Meter, Gauge

Meter Unit Assembly

- Install the bulbs in the original positions.

BR, Y/W [A]
G, GY [B]
BR, BL/R [C]

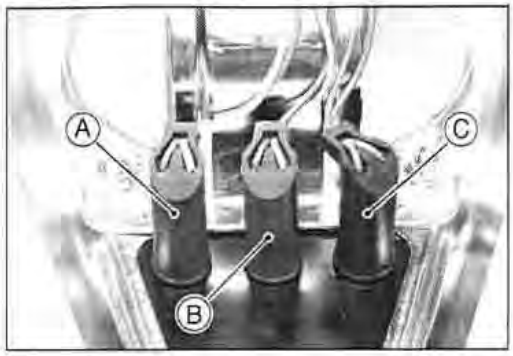

BK/Y, R/BL [A]
R/BK, BK/Y [B]
W/Y [C]
BK/Y [D]
LB [E]
R/BL, BK/Y [F]
LG, BR [G]
BR [H]
BK/Y [J]

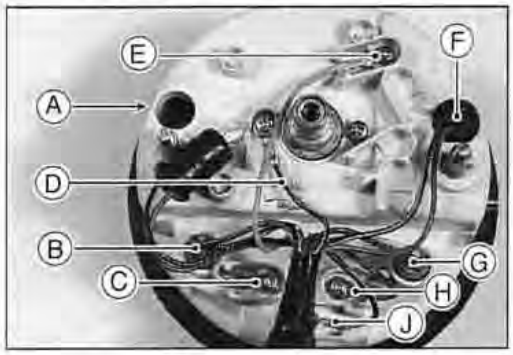

Water Temperature Warning System Inspection

The water temperature warning light goes on when the ignition switch is turned on and goes off soon after the engine starts running to ensure that its circuit functions properly and the warning light bulb has not burned out. The warning light also goes on whenever the coolant temperature rises to **110 ~ 120°C (230 ~ 248°F)** when the motorcycle is in operation. If it stays on, stop the engine and check the coolant level in the reserve tank after the engine cools down.

- Inspect the water temperature warning light and the system wiring (see Wiring Inspection).
- Turn on the ignition switch.
- Disconnect the water temperature switch lead [A], then ground it to the frame or engine using auxiliary lead.

★If the water temperature warning light is lit, inspect the water temperature switch [B] (see Switches and Sensors section) and the IC igniter. Replace the switch or the igniter if damaged.

★If the warning light is not lit, check the warning light bulb and wiring.

Front [C]

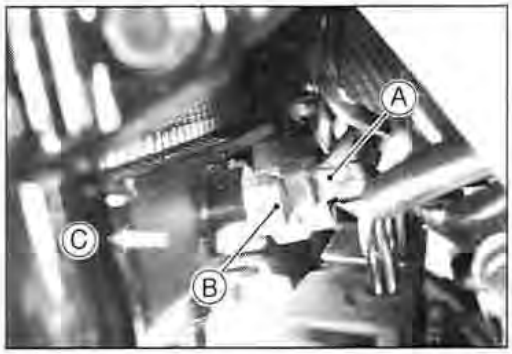

Meter, Gauge

Water Temperature Warning System

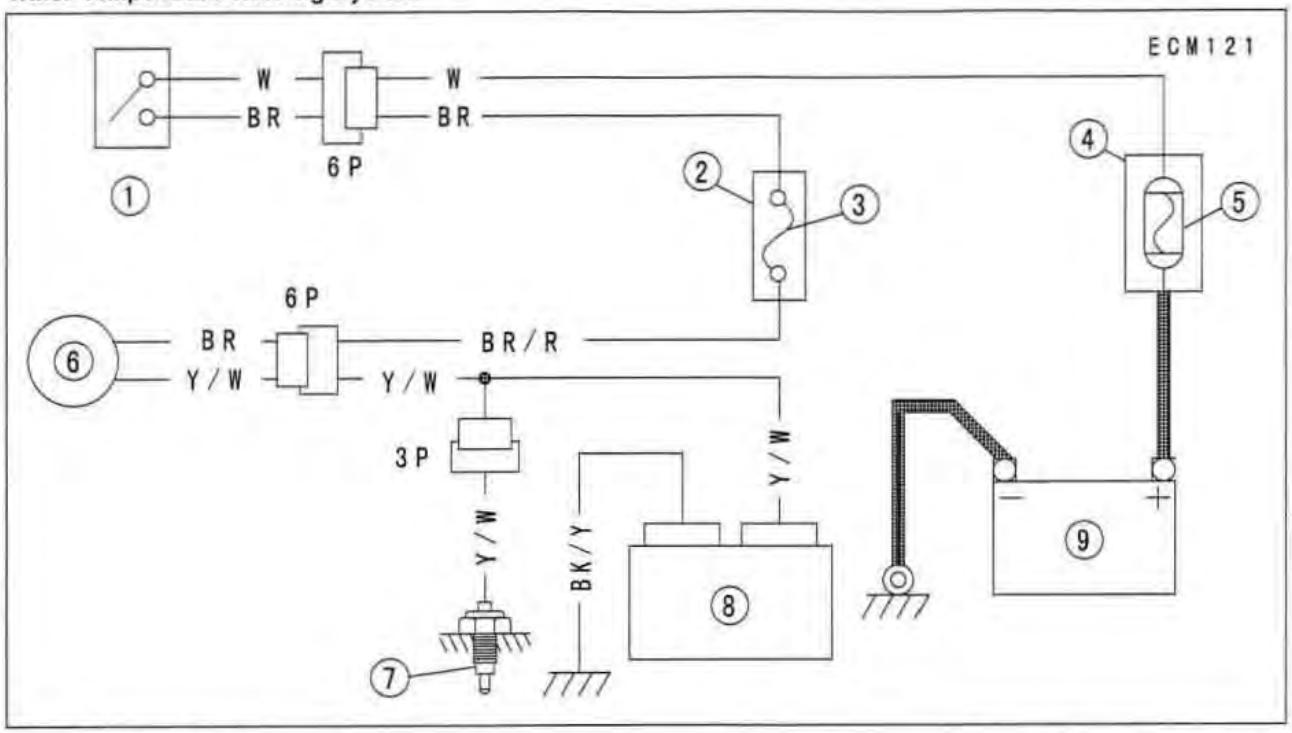

1. Ignition Switch
2. Junction Box
3. Ignition Fuse 10 A
4. Starter Relay
5. Main Fuse 30 A
6. Water Temperature Warning Light
7. Water Temperature Switch
8. IC Igniter
9. Battery

Fuel Gauge Operation Inspection

- Remove the fuel tank (see Fuel System chapter).
- Connect the meter connector [A] (6P white) as shown.
- Prepare an auxiliary wire, and check the operation of the gauge.





Fuel Gauge Operation Check

Ignition Switch Position: ON

Wire Location: Female 2-pin fuel gauge connector [A] (disconnected)

Results: Gauge should read E when connector wires are opened.
Gauge should read F when connector wires are shorted.

★ If the gauge readings are correct, the fuel level sensor is bad (see Fuel Level Sensor Inspection). If these readings are not obtained, the trouble is with the gauge and/or wiring.

- Check the fuel gauge circuit wiring (see Wiring Inspection).

★ If all wiring and components other than the fuel gauge check out good, the gauge is defective.

Meter, Gauge

Fuel Gauge Circuit

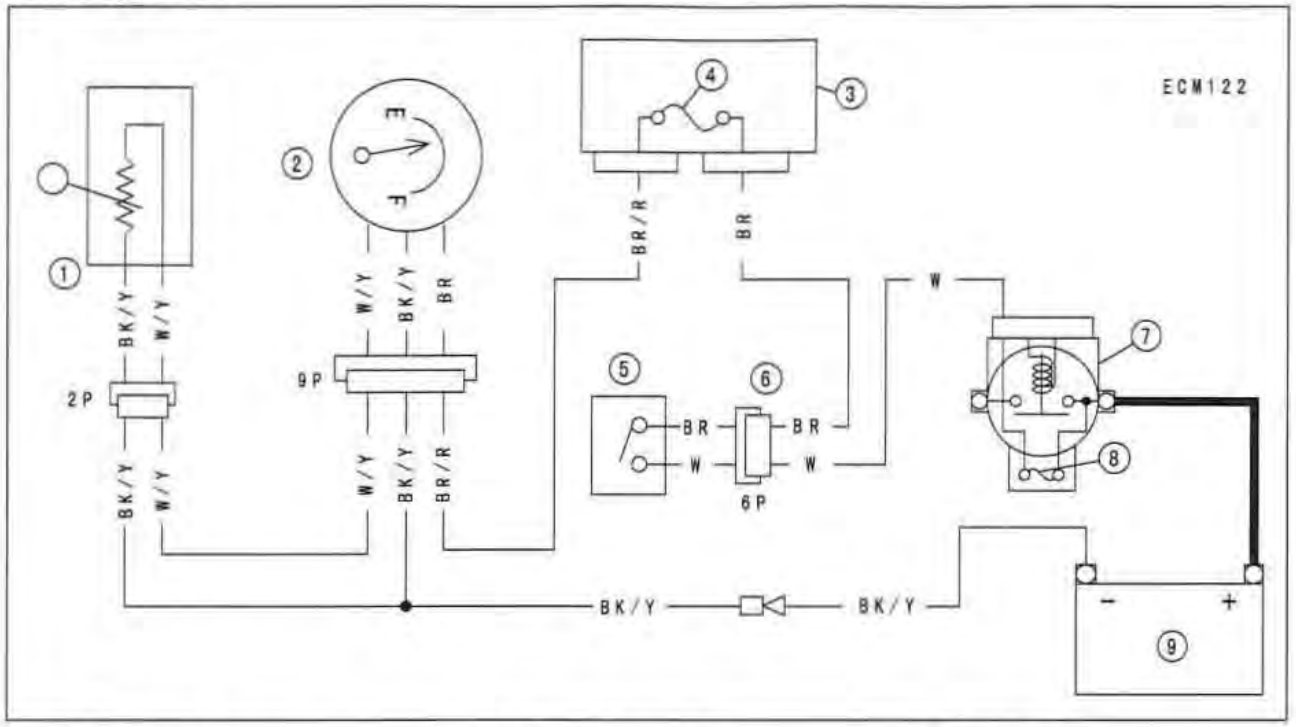

1. Fuel Level Sensor
2. Fuel Gauge
3. Junction Box
4. Ignition Fuse 10 A
5. Ignition Switch
6. Ignition Switch Connector
7. Starter Relay
8. Main Fuse 30 A
9. MF Battery

Switch and Sensors

Front Brake Light Switch Inspection (Periodic Inspection)

- Turn on the ignition switch.
- The brake light should go on when the front brake is applied.

★ If it does not, replace the switch.

Rear Brake Light Switch Adjustment (Periodic Inspection)

- Check the operation of the rear brake light switch by depressing the brake pedal [A]. The brake light should go on after about **15 mm** of the pedal travel [B].

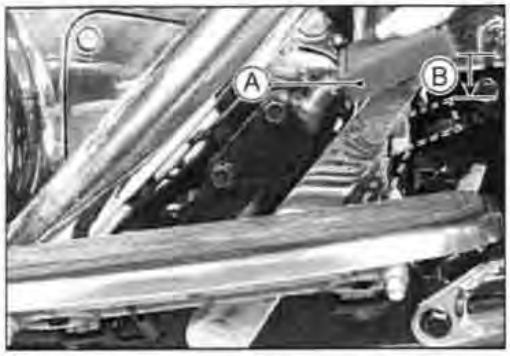

★ If it does not, adjust the brake light switch.

- While holding the switch body, turn the adjusting nut to adjust the switch.

  Switch Body [A]
  Adjusting Nut [B]
  Light sooner as the body rises [C]
  Light later as the body lowers [D]

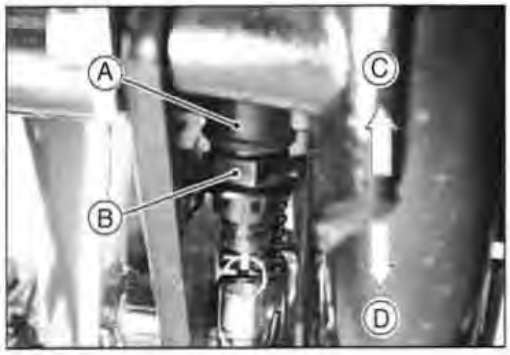

CAUTION

To avoid damaging the electrical connections inside the switch, be sure that the switch body does not turn during adjustment.

Radiator Fan Switch Removal

CAUTION

The fan switch should never be allowed to fall on a hard surface. Such a shock to the part can damage it.

- Drain the coolant (see Coolant Draining).
- Remove:

  Front Guard (see Frame chapter)
  Regulator/Rectifiers (see this chapter)
- Disconnect the fan switch connector.
- Unscrew the radiator fan switch [A].

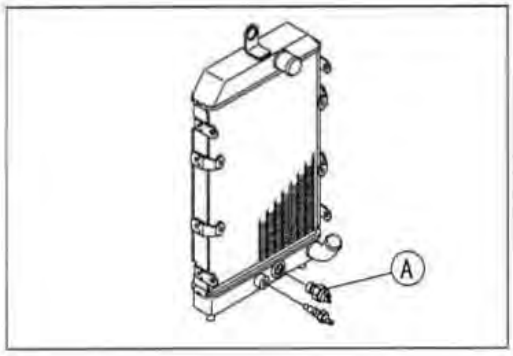

Radiator Fan Switch Installation

Torque - Radiator Fan Switch: 18 N·m (1.8 kg·m, 13.0 ft·lb)

- Fill the coolant and bleed the air from the cooling system (see Coolant Filling in the Cooling System chapter).

Switch and Sensors

Radiator Fan Switch Inspection

- Remove the fan switch from the radiator.
- Suspend the switch [A] in a container of coolant so that the temperature-sensing projection and threaded portion are submerged.
- Suspend an accurate thermometer [B] in the coolant so that the sensitive portions [C] are located in almost the same depth.

NOTE

□ *The switch and thermometer must not touch the container sides or bottom.*

- Place the container over a source of heat and gradually raise the temperature of the coolant while stirring the coolant gently.
- Using the hand tester (special tool), measure the internal resistance of the switch across the terminals at the temperatures shown in the table.

★ If the hand tester does not show the specified values, replace the switch.

Fan Switch Resistance
○Rising temperature:
From OFF to ON at 100 ~ 110°C (212 ~ 230°F)
○Falling temperature:
From ON to OFF at 97 ~ 103°C (203 ~ 217°F)
ON: Less than 0.5 Ω
OFF: More than 1 MΩ

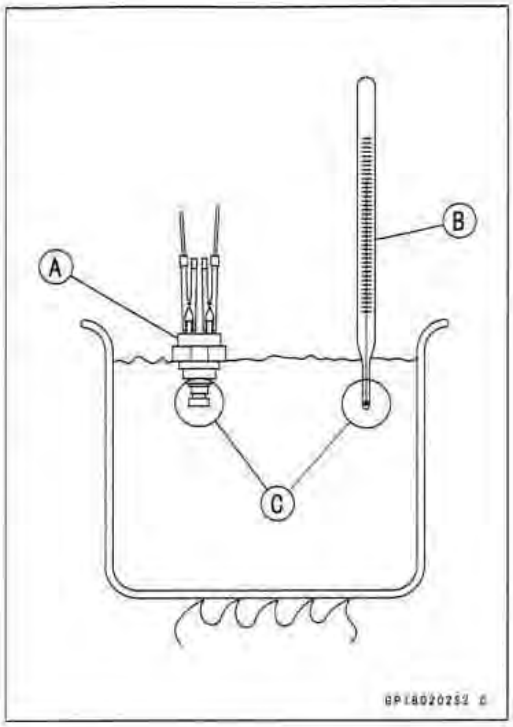

Water Temperature Switch Removal

CAUTION

The water temperature switch should never be allowed to fall on a hard surface. Such a shock to the part can damage it.

- Drain the coolant (see Coolant Draining in the Cooling System chapter).
- Remove:
  Front Guard (see Frame chapter)
  Regulator/Rectifiers (see this chapter)
- Disconnect the switch connector.
- Remove the water temperature switch [A].

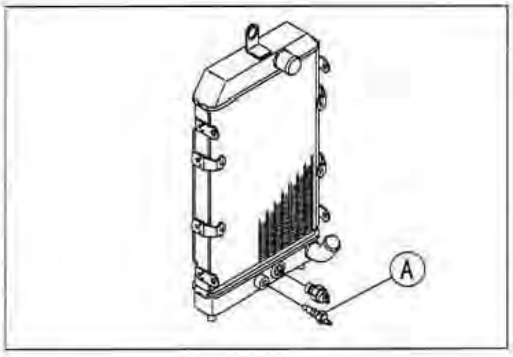

Water Temperature Switch Installation

- Apply silicone sealant to the threads of the water temperature switch.

Torque - Water Temperature Switch: 7.8 N·m (0.80 kg·m, 69 in·lb)

- Fill the engine with coolant and bleed the air from the cooling system (see Coolant Filling).

Switch and Sensors

Water Temperature Switch Inspection

- Remove the water temperature switch.
- Suspend the switch [A] in a container of coolant so that the temperature-sensing projection and threaded portion are submerged.
- Suspend an accurate thermometer [B] in the coolant so that the sensitive portions [C] are located in almost the same depth.

NOTE

○ *The switch and thermometer must not touch the container side or bottom.*

- Place the container over a source of heat and gradually raise the temperature of the water while stirring the water gently.
- Using the hand tester, measure the internal resistance of the switch across the terminal and the body at the temperatures shown in the table.

★ If the hand tester does not show the specified values, replace the switch.

Water Temperature Switch Resistance
ON: 110 ~ 120°C (230 ~ 248°F)
OFF: 108°C (226°F) ~ temperature less than ON temperature

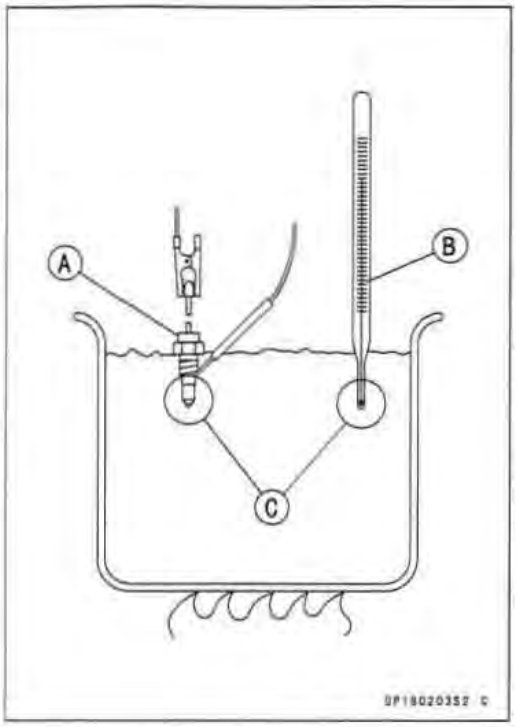

Fuel Level Sensor Inspection

- Remove the fuel tank (see Fuel System chapter).
- Remove the fuel level sensor from the fuel tank.
- Check that the float moves up and down smoothly without binding. It should go down under its own weight.

★ If the float does not move smoothly, replace the sensor.
Float in Full Position [A]
Float in Empty Position [B]
Float Arm Stoppers [C]

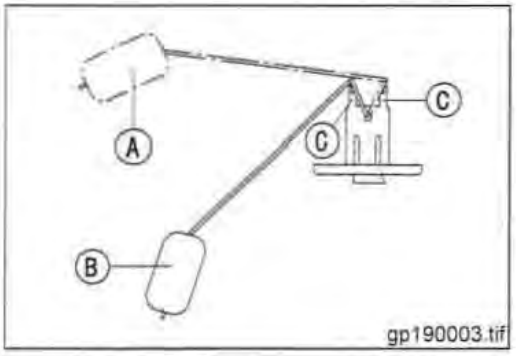

- Using the hand tester, measure the resistance across the terminals in the fuel level sensor lead connector [A].

Special Tool - Hand Tester: 57001-1394

★ If the tester readings are not as specified, or do not change smoothly according as the float moves up and down, replace the sensor.

Fuel Level Sensor Resistance
Standard: **Full position: 4 ~ 10 Ω**
Empty position: 90 ~ 100 Ω

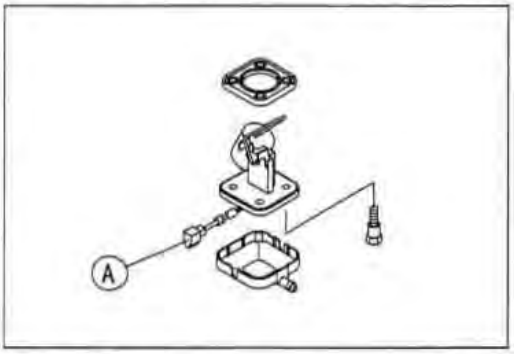

Throttle Sensor Removal/Installation

- Remove the carburetor (see Fuel System chapter).
- Remove the throttle sensor [A] by unscrewing the mounting screws [B].
Inlet Side [C]
- Be sure to adjust the throttle sensor when installing (see Throttle Sensor Adjustment).

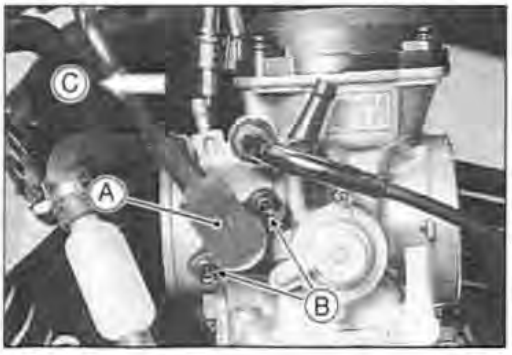

Switch and Sensors

Throttle Sensor Inspection

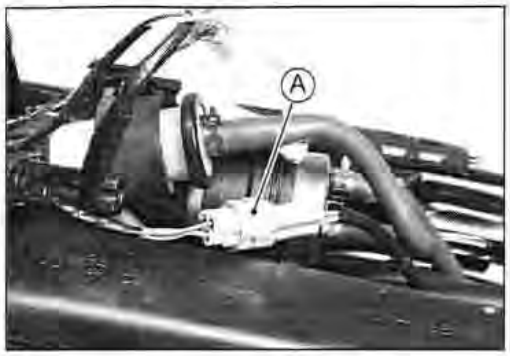

NOTE

○ *Be sure the battery is fully charged.*

- Remove the fuel tank (see Fuel System chapter).
- Prepare an auxiliary fuel tank and connect the fuel hose to the carburetor.
- Start the engine and warm it up thoroughly.
- Check idle speed and stop the engine.

★ If the idle speed is out of the specified range, adjust it.

Idle Speed
Standard: **800 ± 50 r/min (rpm)**
(AR, CA, FG, ST) 1000 ± 50 r/min (rpm)

- Disconnect the throttle sensor connector [A].

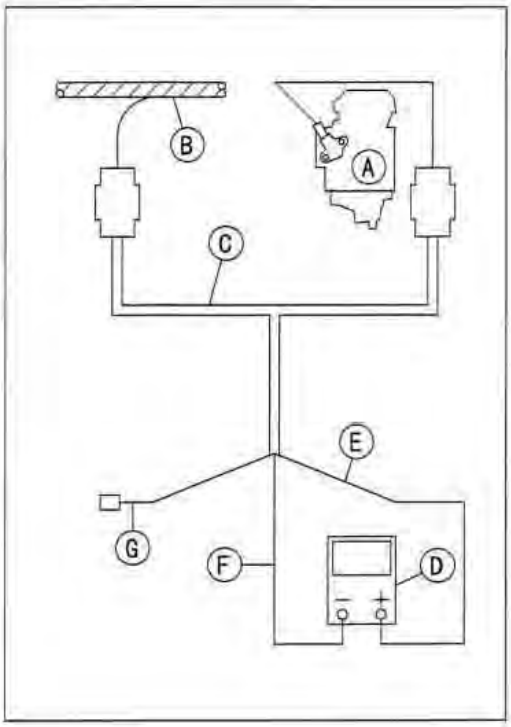

- Connect the throttle sensor setting adapter [C] (special tool) between the carburetor [A] and the main harness [B].
- Connect the hand tester [D] to the setting adapter.
  Hand Tester (+) — Y/W Lead [E]
  Hand Tester (–) — BK/BL Lead [F]
  Vacant Lead [G]

Special Tools - Throttle Sensor Setting Adapter: 57001-1400
Hand Tester: 57001-1394

- Turn on the ignition switch.
- Measure the sensor output voltage with the engine stopped and with the idle throttle opening.

Throttle Sensor Output Voltage
Standard: **0.9 ~ 1.1 V (at idle throttle opening)**

★ If the reading is not within the specified range, adjust the throttle sensor position (see Throttle Sensor Position Adjustment).

★ If the reading is within the specified range, check the sensor output voltage at full throttle opening.

Throttle Sensor Output Voltage
Standard: **4.06 ~ 4.26V (at full throttle opening)**

★ If the reading is not within the specified range, readjust the sensor.

★ If the throttle sensor cannot be adjusted, replace the sensor.

Throttle Sensor Position Adjustment

- Check the throttle sensor output voltage (see Throttle Sensor Inspection).
- If the output voltage is out of the range, adjust it as follows.
- Loosen the throttle sensor mounting screws.
- Adjust the position of the sensor until the output voltage is within the specified range (see Throttle Sensor Inspection).

Junction Box

The junction box [A] has fuses [B], relays, and diodes. The relays and diodes can not be removed.



Junction Box Fuse Circuit Inspection

- Remove the seat (see Frame chapter).
- Remove the turn signal control unit.
- Remove the junction box.
- Pull off the connectors from the junction box.
- Make sure all connector terminals are clean and tight, and none of them have been bent.

★ Clean the dirty terminals, and straighten slightly-bent terminals.

- Check conductivity of the numbered terminals with the hand tester.

★ If the tester does not read as specified, replace the junction box.

Fuse Circuit Inspection

Tester Connection	Tester Reading (Ω)
1 – 1A	0
1 – 2	0
3A – 4	0
6 – 5	0
6 – 10	0
6 – 7	0
6 – 17	0

Tester Connection	Tester Reading (Ω)
1A – 8	∞
2 – 8	∞
3A – 8	∞
6 – 2	∞
6 – 3A	∞
17 – 3A	∞

Starter Circuit/Headlight Relay Inspection

- Remove the junction box.
- Check conductivity of the following numbered terminals by connecting the hand tester and one 12 V battery to the junction box as shown.

★ If the tester does not read as specified, replace the junction box.

Relay Circuit Inspection (with the battery disconnected)

	Tester Connection	Tester Reading (Ω)
Headlight Relay	*7 – 8	∞
	*7 – 13	∞
	(+) (–) *13 – 9	Not ∞**

	Tester Connection	Tester Reading (Ω)
Starter Circuit Relay	9 – 11	∞
	12 – 13	∞
	(+) (–) 13 – 11	∞
	(+) (–) 12 – 11	Not ∞**

(*): US, Canada, Malaysia, and Australia Models only
(**): The actual reading varies with the hand tester used.
(+): Apply tester positive lead.
(–): Apply tester negative lead.

Junction Box

Relay Circuit Inspection (with the battery connected)

Reading	Battery Connection (+) (–)	Tester Connection	Tester Reading (Ω)
Headlight Realy	*9 – 13	*7 – 8	0
Starter Circuit Relay	11 – 12	(+) (–) 13 – 11	Not ∞**

(*): US, Canada, Malaysia, and Australia Models only
(**): The actual reading varies with the hand tester used.
(+): Apply tester positive lead.
(–): Apply tester negative lead.

Diode Circuit Inspection

- Remove the junction box.
- Check conductivity of the following pairs of terminals.

Diode Circuit Inspection

Tester Connection	*13 – 8, *13 – 9, 12 – 11, 12 – 14, 15 – 14, 16 – 14

(*): US, Canada, Malaysia, and Australia Models only

★ The resistance should be low in one direction and more than ten times as much in the other direction. If any diode shows low or high in both directions, the diode is defective and the junction box must be replaced.

NOTE

The actual meter reading varies with the meter or tester used and the individual diodes, but generally speaking, the lower reading should be from zero to one half the scale.

Junction Box

Junction Box Internal Circuit (Australia, Canada, Malaysia, and U.S.)

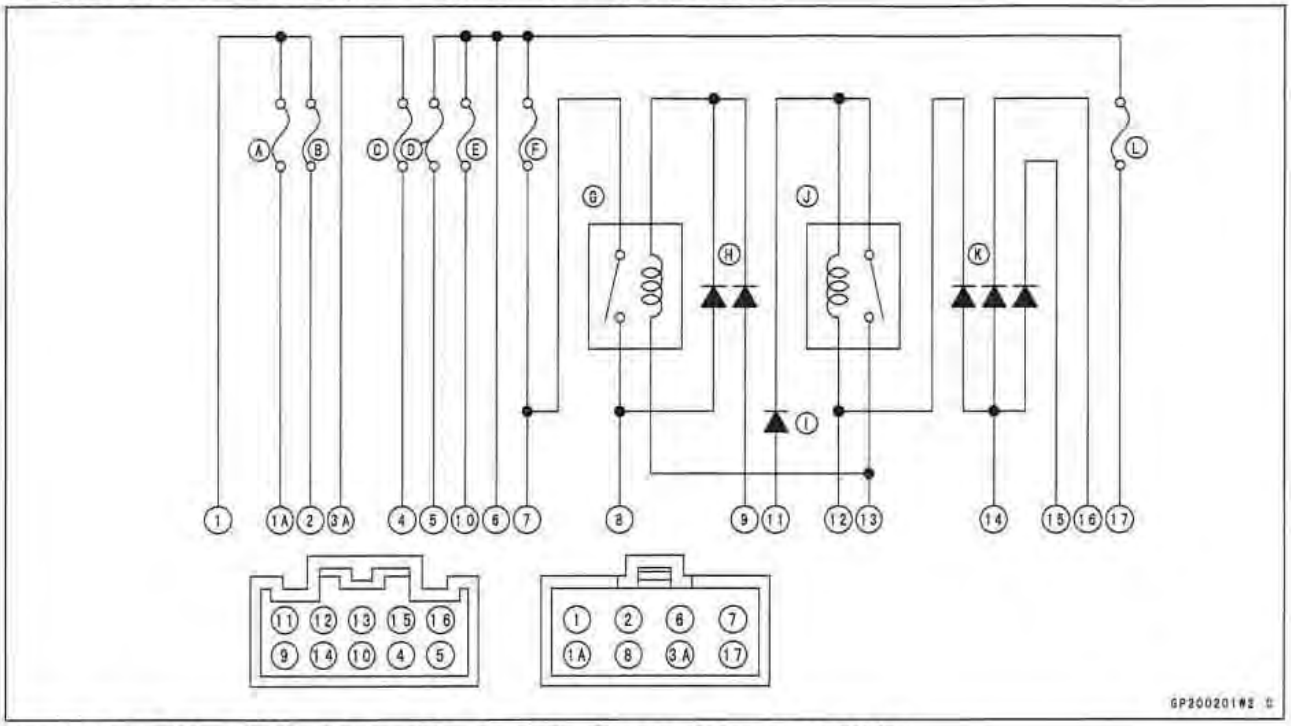

Junction Box Internal Circuit (Except for Australia, Canada, Malaysia, and U.S.)

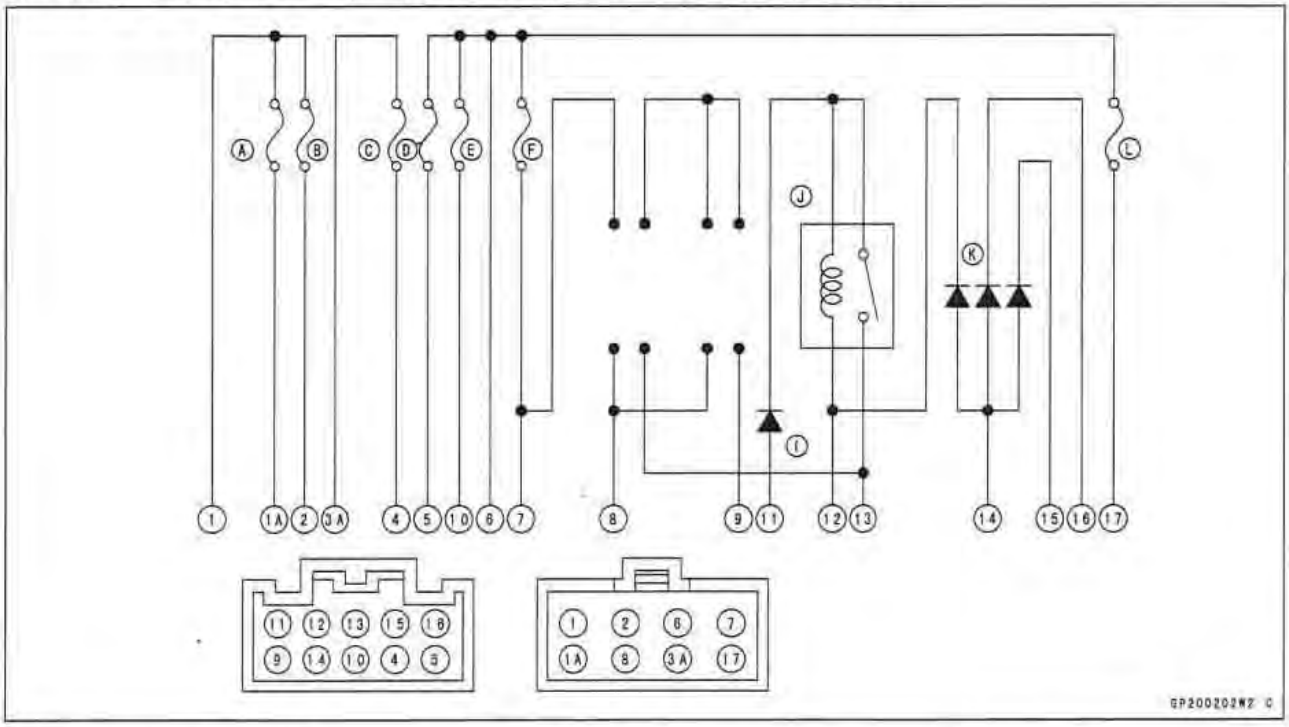

A. Accessory Fuse 10 A
B. Fan Fuse 10 A
C. Turn Signal Fuse 10 A
D. Horn Fuse 10 A
E. Ignition Fuse 10 A
F. Headlight Fuse 10 A
G. Headlight Relay
H. Headlight Diodes
I. Starter Diode
J. Starter Circuit Relay
K. Interlock Diodes
L. Taillight Fuse 10 A

Fuse

Main Fuse Removal

- Remove the right side cover (see Frame chapter).
- Remove the starter relay [A].
- Pull out the main fuse [B] from the starter relay with needle nose pliers.

Front [C]



Junction Box Fuse Removal

- Remove the front seat (see Frame chapter).
- Unlock the hook to lift up the lid [A].
- Pull the fuses [B] straight out of the junction box with needle nose pliers.



Fuse Installation

- If a fuse fails during operation, inspect the electrical system to determine the cause, and then replace it with a new fuse of proper amperage.
- Install the junction box fuses on the original position as specified on the lid.

Fuse Inspection

- Remove the fuse (see Fuse Removal).
- Inspect the fuse element.

★If it is open out, replace the fuse. Before replacing a blown fuse, always check the amperage in the affected circuit. If the amperage is equal to or greater than the fuse rating, check the wiring and related components for a short circuit.

Housing [A]
Fuse Element [B]
Terminals [C]
Blown Element [D]

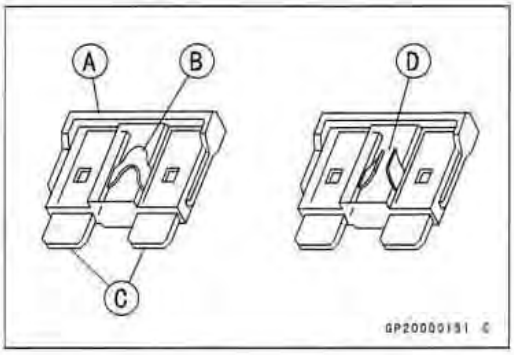

CAUTION

When replacing a fuse, be sure the new fuse matches the specified fuse rating for that circuit. Installation of a fuse with a higher rating may cause damage to wiring and components.

VN1500-G1 Wiring Diagram (Canada, Malaysia, and U.S.)

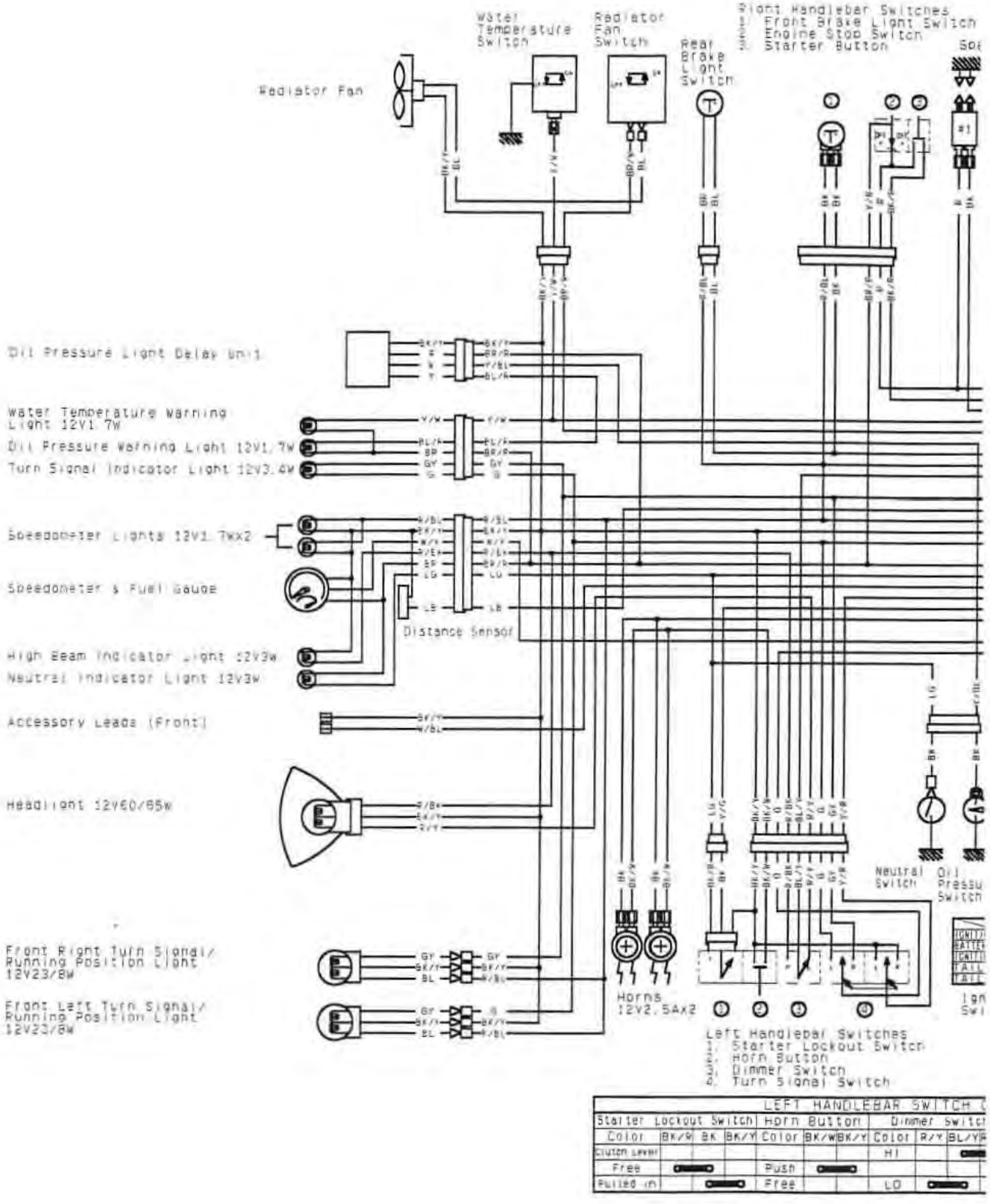

VN1500-G1 Wiring Diagram (Canada, Malaysia, and U.S.)

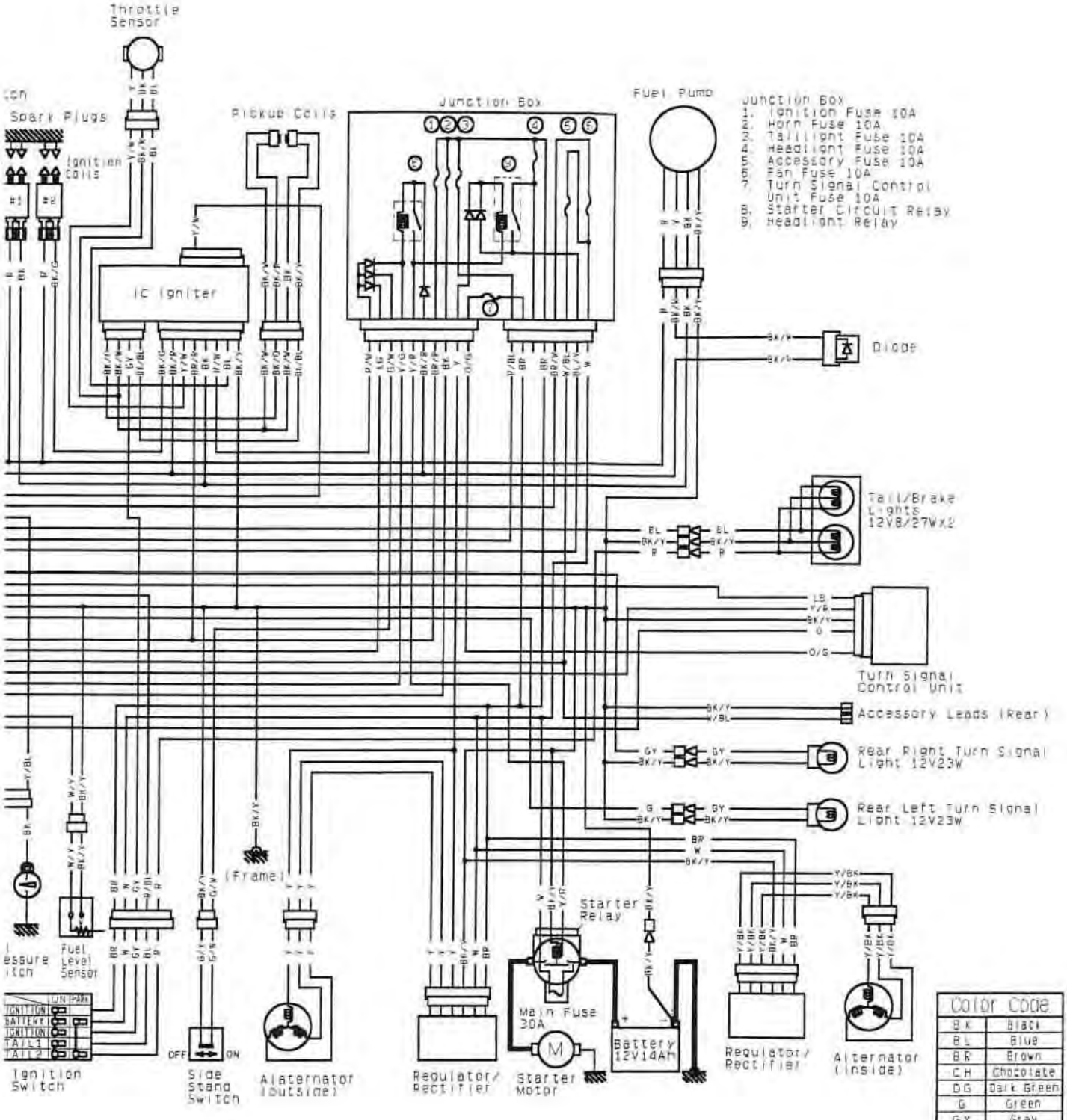

IGNITION SWITCH CONNECTIONS					
	Ignition	Battery	Ignition	Tail	Tail2
Color	BR	W	GY	BL	R
OFF					
ON					
P(PARK)					

RIGHT HANDLEBAR SWITCH CONNECTIONS								
Front Brake Light Switch			Engine Stop Switch			Starter Button		
Color	BK	BK	Color	Y/R	R	Color	R	BK/R
Brake Lever Pulled In			OFF			Free		
			RUN			Push		

(98051-1744A)

VN1500-G1, H1 Wiring Diagram (Except for Australia, Canada, Malaysia, and U.S.)

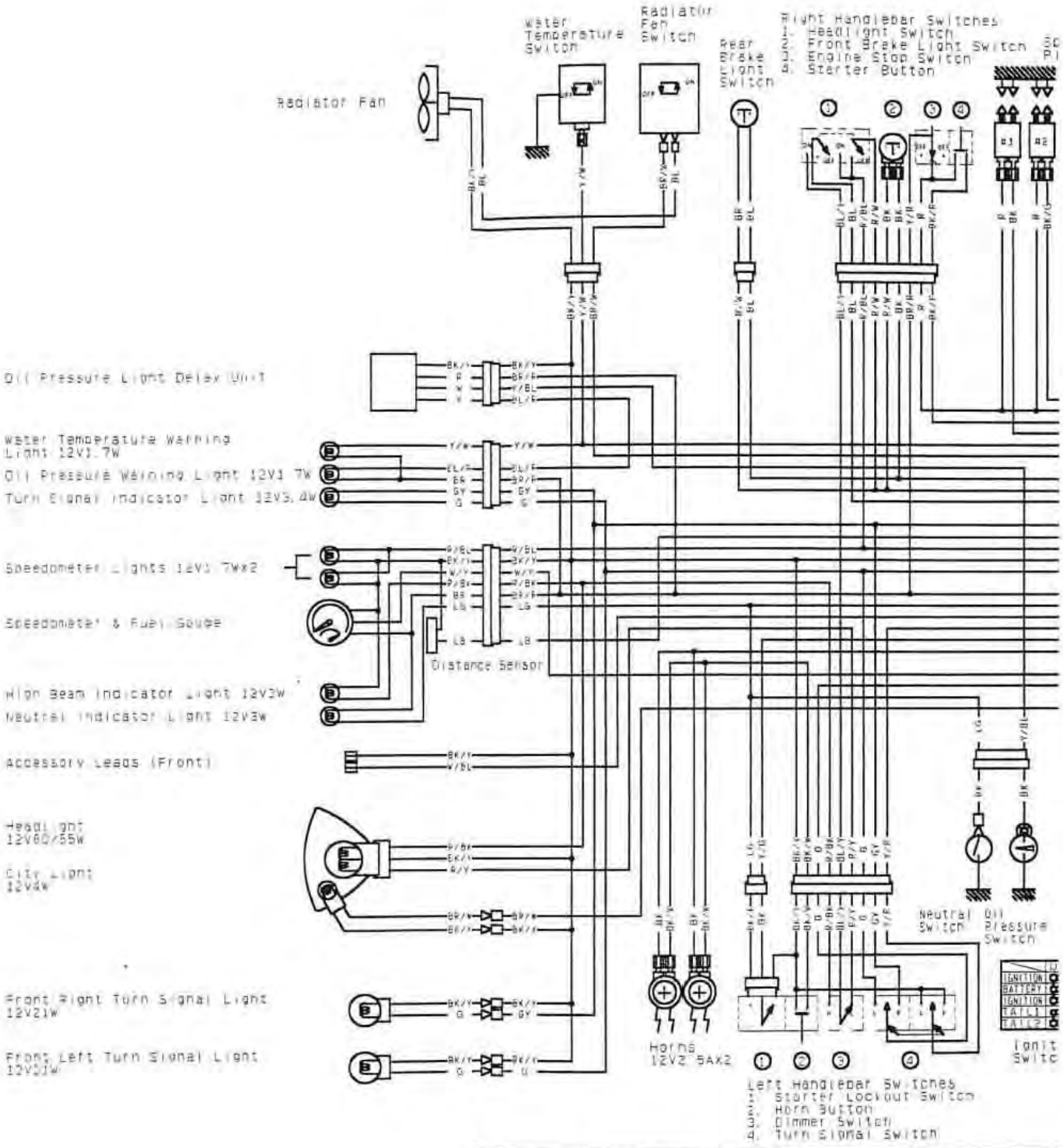

LEFT HANDLEBAR SWITCH CONNECTIONS

Starter lockout Switch			Horn Button		Dimmer Switch			Turn Signal Swi			
Color	BK/P	BK	BK/Y	Color	BK/W	BK/Y	Color	R/Y	BL/Y	R/BK	Color	G	O	GY	B
Clutch Lever							HI				L				
Free				Push							OFF(Push)				
Pulled in				Free			LO				R				
											R&L(Held)				

VN1500-G1, H1 Wiring Diagram (Except for Australia, Canada, Malaysia, and U.S.)

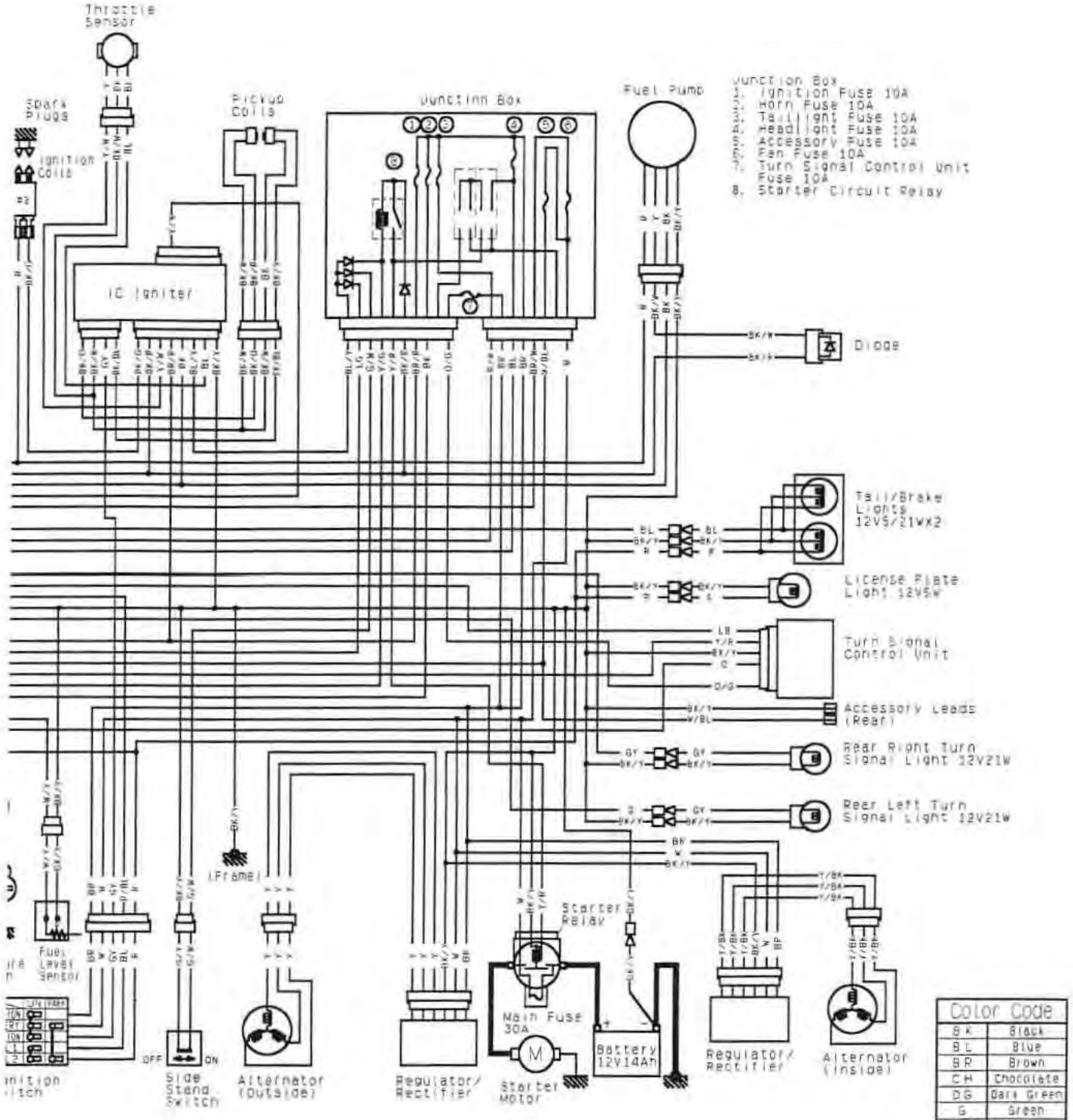

Color Code	
BK	Black
BL	Blue
BR	Brown
CH	Chocolate
DG	Dark Green
G	Green
GY	Gray
LB	Light Blue
LG	Light Green
O	Orange
P	Pink
PU	Purple
R	Red
W	White
Y	Yellow

(95051-17ERA)

Switch			
GY	BK/Y	Y/R	

IGNITION SWITCH CONNECTIONS

	Ignition	Battery	Ignition	Tail	Tail
Color	BR	W	GY	BL	R
OFF					
ON					
P(PARK)					

RIGHT HANDLEBAR SWITCH CONNECTIONS

Headlight Switch					Front Brake Light Switch			Engine Stop Switch			Starter Button		
COLOR	P/EL	P/W	BL/Y	BL	Color	BK	BK	Color	R	Y/R	Color	R	BK/R
OFF								OFF					
					Brake Lever								
					Pulled In						Push		
ON					Free			RUN			Free		

VN1500-G1 Wiring Diagram (Australia)

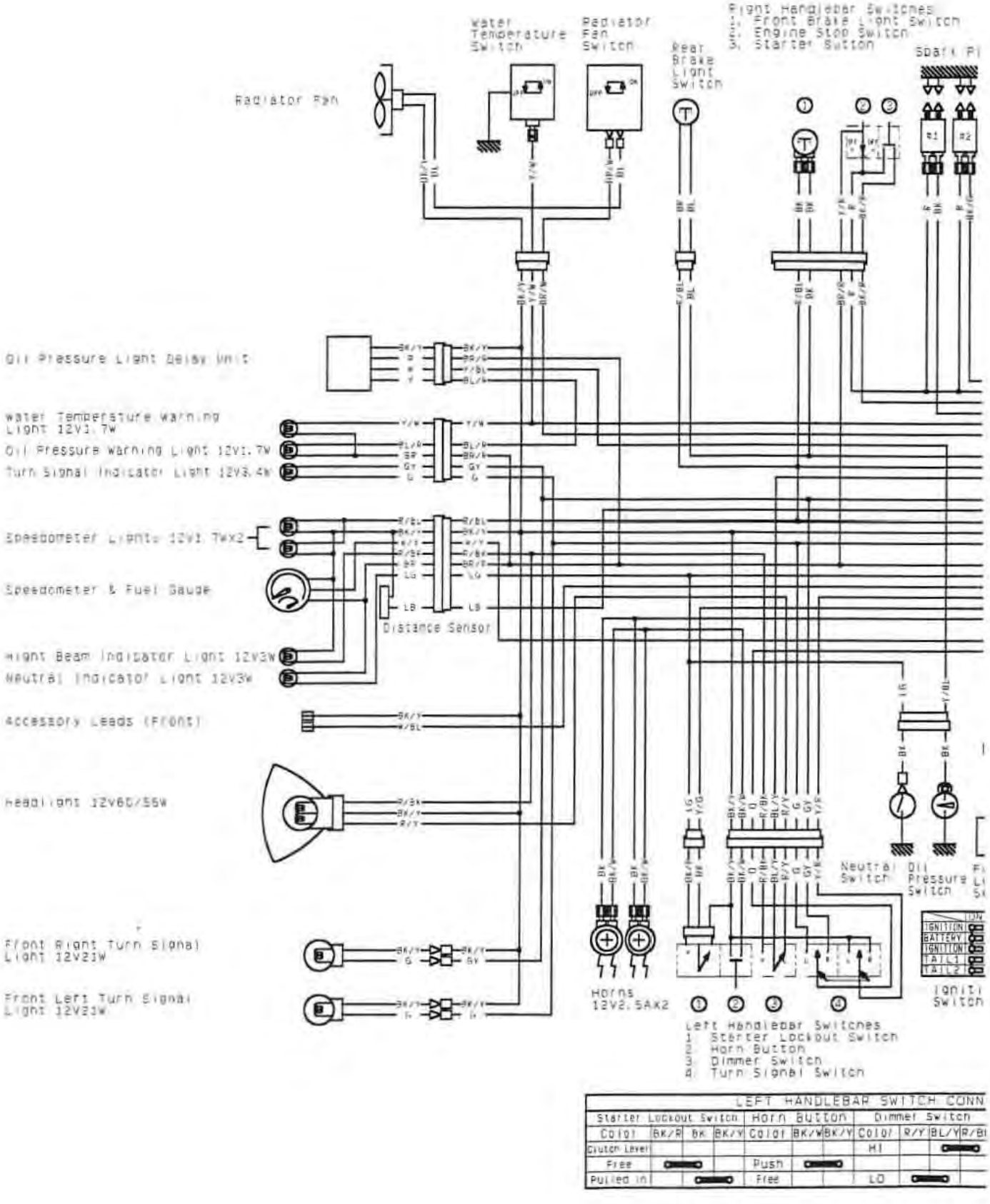

LEFT HANDLEBAR SWITCH CONN										
Starter Lockout Switch				Horn Button			Dimmer Switch			
Color	BK/R	BK	BK/Y	Color	BK/W	BK/Y	Color	R/Y	BL/Y	R/B
Clutch Lever							HI			
Free				Push						
Pulled in				Free			LO			

VN1500-G1 Wiring Diagram (Australia)

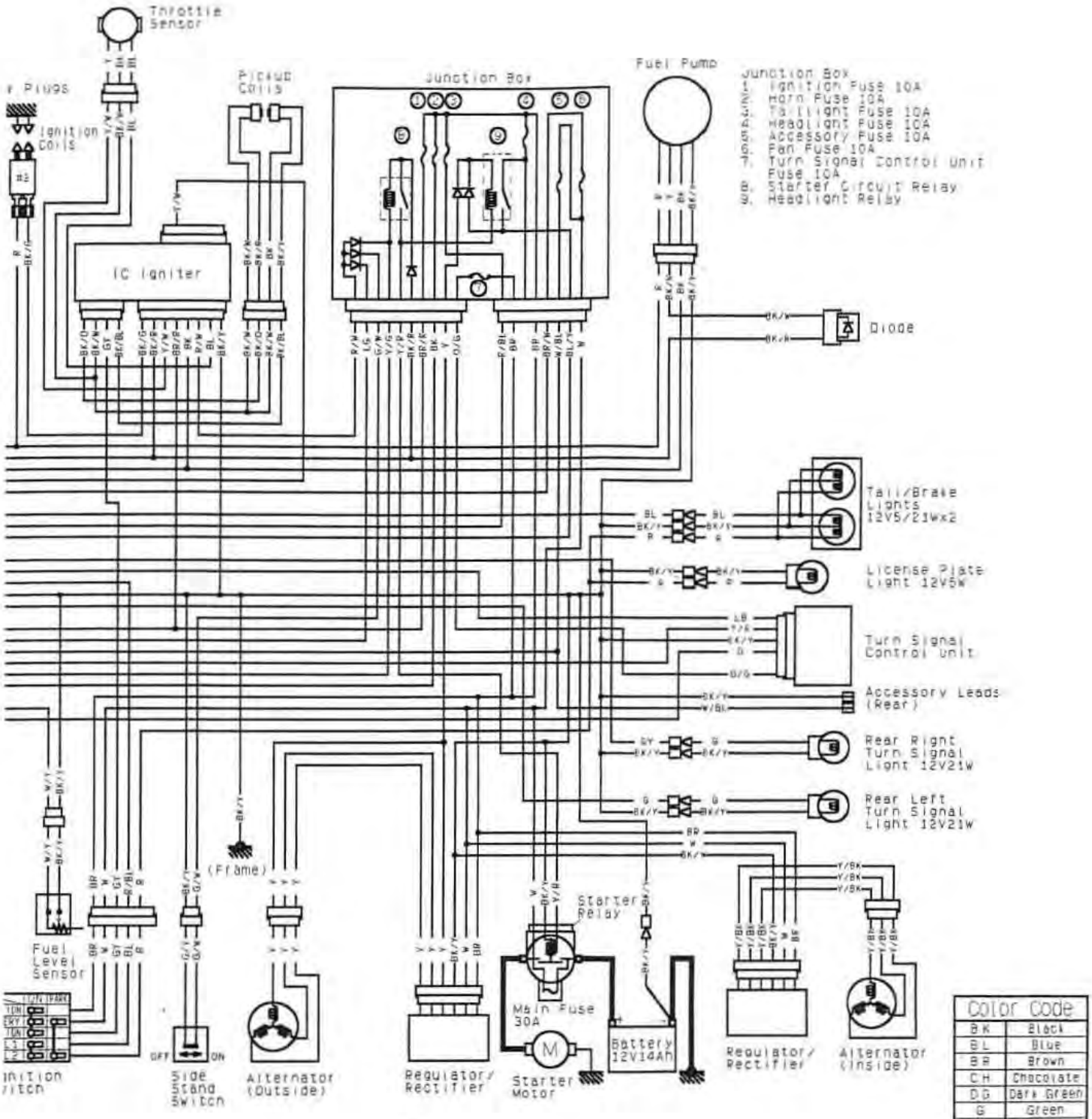

CONNECTIONS						
tch	Turn Signal Switch					
/Y/R/BK	Color	G	O	GY	BK/Y	Y/R
	L					
	OFF(PUSH)					
	R					
	REL(Hold)					

IGNITION SWITCH CONNECTIONS					
	Ignition	Battery	Ignition	Tail	Tail
Color	BR	W	GY	BL	R
OFF					
ON					
P(Push)					

RIGHT HANDLEBAR SWITCH CONNECTIONS								
Front Brake Light Switch			Engine Stop Switch			Starter Button		
Color	BK	BK	Color	Y/R	R	Color	R	BK/R
Brake Lever			OFF			Free		
Pulled In			RUN			Push		

(98051-1747A)

VN1500-G3 Wiring Diagram (U.S.A. Model)

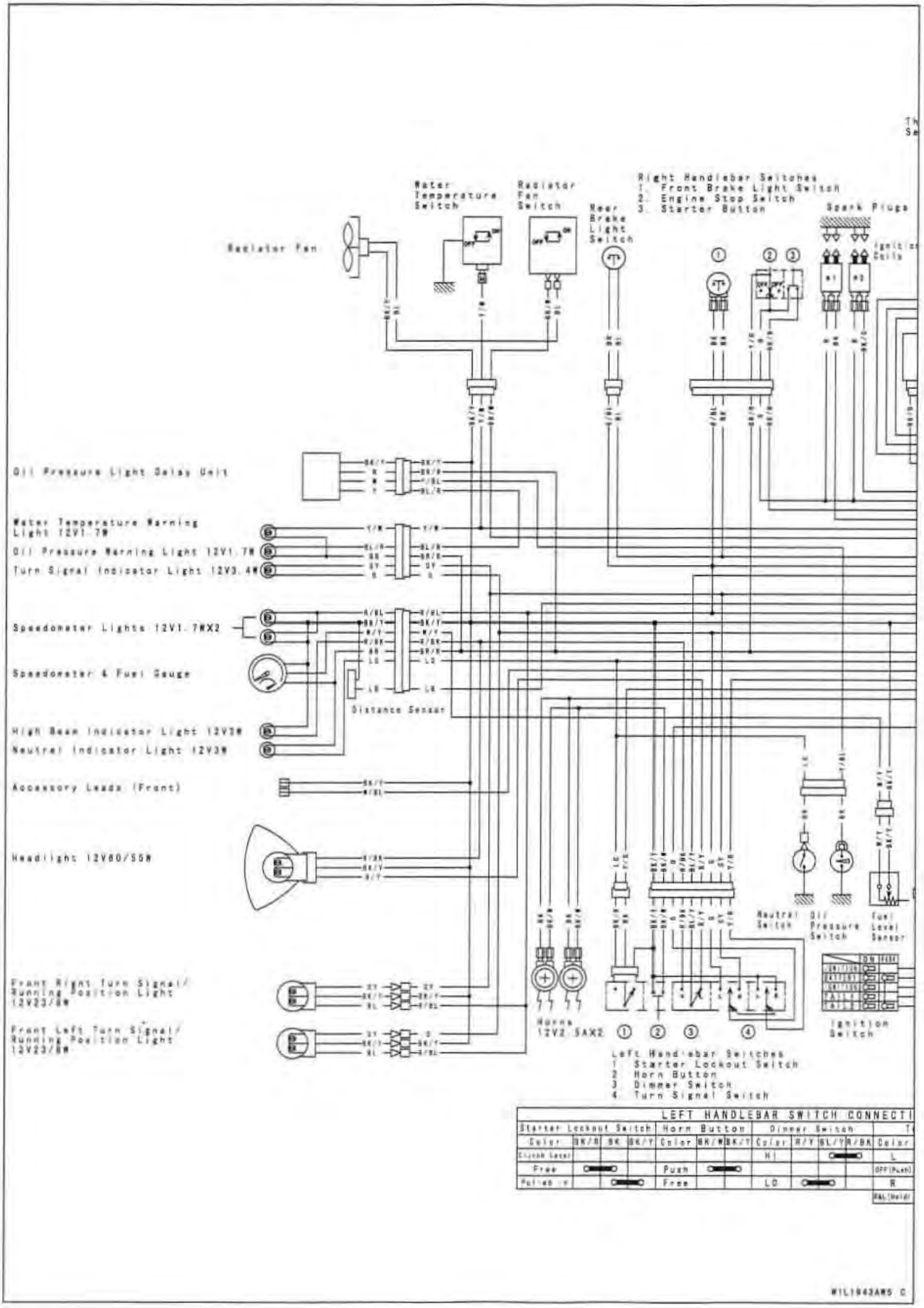

VN1500-G3 Wiring Diagram (U.S.A. Model)

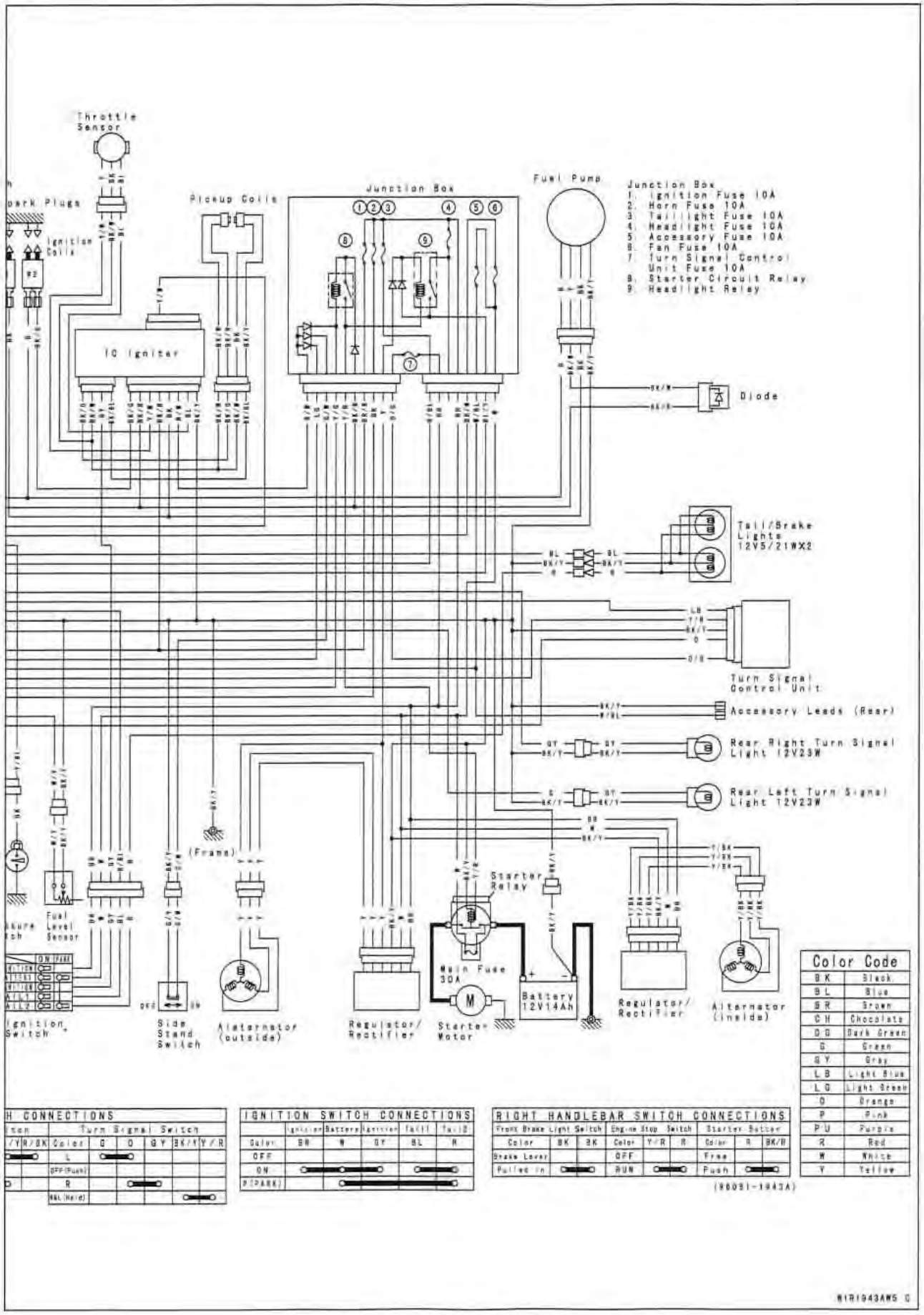

Appendix

Table of Contents

Additional Considerations for Racing 16-2
Carburetor: 16-2
Spark Plug: 16-2
Spark Plug Inspection 16-4
Troubleshooting Guide 16-5
General Lubrication 16-10
Lubrication (Periodic Maintenance) 16-10
Nut, Bolt, and Fastener Tightness 16-11
Tightness Inspection (Periodic Inspection) 16-11
Unit Conversion Table 16-12

Additional Considerations for Racing

This motorcycle has been manufactured for use in a reasonable and prudent manner and as a vehicle only. However, some may wish to subject this motorcycle to abnormal operation, such as would be experienced under racing conditions. KAWASAKI STRONGLY RECOMMENDS THAT ALL RIDERS RIDE SAFELY AND OBEY ALL LAWS AND REGULATIONS CONCERNING THEIR MOTORCYCLE AND ITS OPERATION.

Racing should be done under supervised conditions, and recognized sanctioning bodies should be contacted for further details. For those who desire to participate in competitive racing or related use, the following technical information may prove useful. However, please note the following important notes.

- You are entirely responsible for the use of your motorcycle under abnormal conditions such as racing, and Kawasaki shall not be liable for any damages which might arise from such use.
- Kawasaki's Limited Motorcycle Warranty and Limited Emission Control Systems Warranty specifically exclude motorcycles which are used in competition or related uses. Please read the warranty carefully.
- Motorcycle racing is a very sophisticated sport, subject to many variables. The following information is theoretical only, and Kawasaki shall not be liable for any damages which might arise from alterations utilizing this information.
- When the motorcycle is operated on public roads, it **must** be in its original state in order to ensure safety and compliance with applicable regulations.

Carburetor:

Sometimes an alteration may be desirable for improved performance under special conditions when proper mixture is not obtained after the carburetor has been properly adjusted, and all parts cleaned and found to be functioning properly.

If the engine still exhibits symptoms of overly rich or lean carburetion after all maintenance and adjustments are correctly performed, the main jet can be replaced with a smaller or larger one. A smaller numbered jet gives a leaner mixture and a larger numbered jet a richer mixture.

Spark Plug:

The spark plug ignites the fuel and air mixture in the combustion chamber. To do this effectively and at the proper time, the correct spark plug must be used, and the spark plug must be kept clean and the gap adjusted.

Tests have shown the plug listed in the "General Information" chapter to be the best plug for general use.

Since spark plug requirements change with the ignition and carburetion adjustments and with riding conditions, whether or not a spark plug of the correct heat range is used should be determined by removing and inspecting the plug.

Terminal [A]
Insulator [B]
Cement [C]
Gasket [D]
Center Electrode [E]
Gap [F]
Reach [G]
Side Electrode [H]

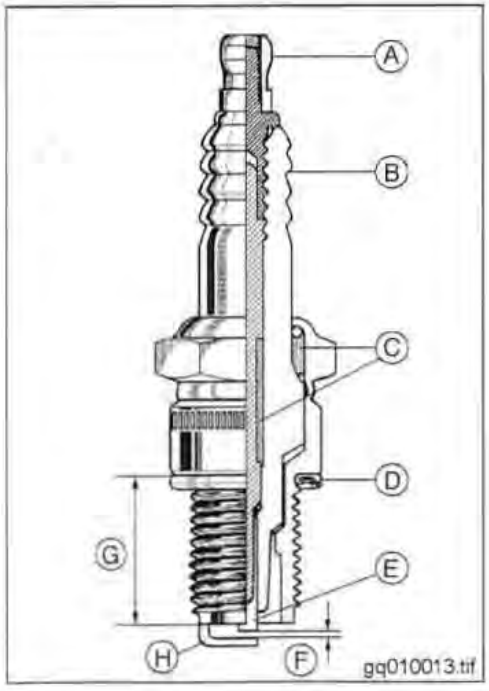

Additional Considerations for Racing

When a plug of the correct heat range is being used, the electrodes will stay hot enough to keep all the carbon burned off, but cool enough to keep from damaging the engine and the plug itself. This temperature is about 400 ~ 800°C (750 ~ 1450°F) and can be judged by noting the condition and color of the ceramic insulator around the center electrode. If the ceramic is clean and of a light brown color, the plug is operating at the right temperature.

A spark plug for higher operating temperatures is used for racing. Such a plug is designed for better cooling efficiency so that it will not overheat and thus is often called a "colder" plug. If a spark plug with too high a heat range is used - that is, a "cold" plug that cools itself too well - the plug will stay too cool to burn off the carbon, and the carbon will collect on the electrodes and the ceramic insulator.

The carbon on the electrodes conducts electricity, and can short the center electrode to ground by either coating the ceramic insulator or bridging across the gap. Such a short will prevent an effective spark. Carbon build-up on the plug can also cause other troubles. It can heat up red-hot and cause preignition and knocking, which may eventually burn a hole in the top of the piston.

Additional Considerations for Racing

Spark Plug Inspection

- Remove the spark plug and inspect the ceramic insulator.

★ Whether or not the right temperature plug is being used can be ascertained by noting the condition of the ceramic insulator around the electrode. A light brown color indicates the correct plug is being used. If the ceramic is black, it indicates that the plug is firing at too low a temperature, so the next hotter type should be used instead. If the ceramic is white, the plug is operating at too high a temperature and it should be replaced with the next colder type.

Carbon Fouling [A]
Oil Fouling [B]
Normal Operation [C]
Overheating [D]

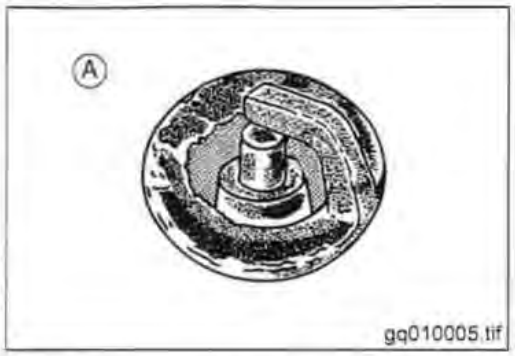

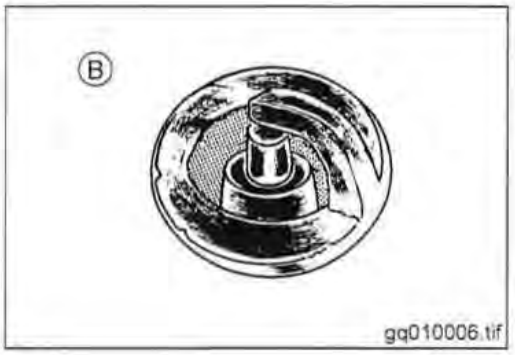

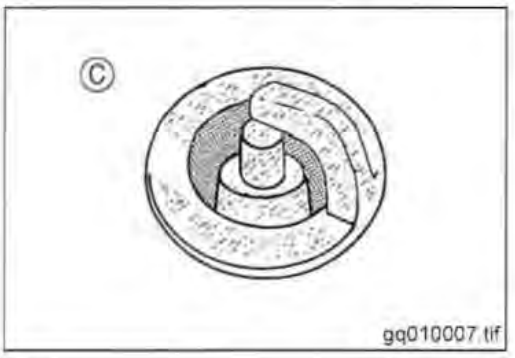

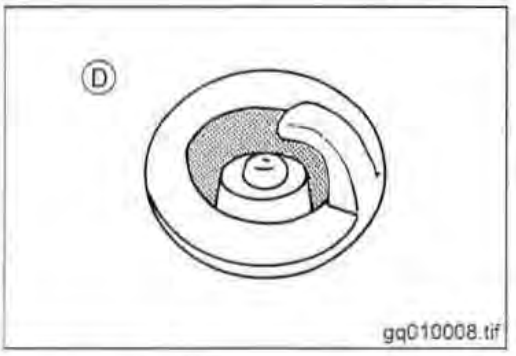

CAUTION

If the spark plug is replaced with a type other than the standard plug, make certain the replacement plug has the same thread pitch and reach (length of threaded portion) and the same insulator type (regular type or projected type) as the standard plug.

If the plug reach is too short, carbon will build up on the plug hole threads in the cylinder head, causing overheating and making it very difficult to insert the correct spark plug later.

If the reach is too long, carbon will build up on the exposed spark plug threads causing overheating, preignition, and possibly burning a hole in the piston top. In addition, it may be impossible to remove the plug without damaging the cylinder head.

Standard Spark Plug Threads

Diameter:	**12 mm**
Pitch:	**1.25 mm**
Reach:	**19 mm**

NOTE

The heat range of the spark plug functions like a thermostat for the engine. Using the wrong type of spark plug can make the engine run too hot (resulting in engine damage) or too cold (with poor performance, misfiring, and stalling).

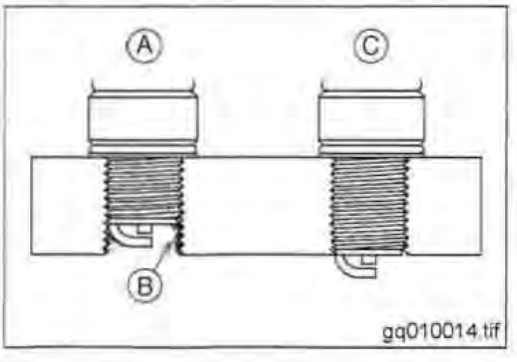

Too short [A]
Carbon builds up here [B]
Correct reach [C]

Troubleshooting Guide

NOTE

This is not an exhaustive list, giving every possible cause for each problem listed. It is meant simply as a rough guide to assist the troubleshooting for some of the more common difficulties.

Engine Doesn't Start, Starting Difficulty:

Starter motor not rotating:
- Starter lockout switch or neutral switch trouble
- Starter motor trouble
- Battery voltage low
- Starter relays not contacting or operating
- Starter button not contacting
- Wiring open or shorted
- Ignition switch trouble
- Engine stop switch trouble
- Fuse blown

Starter motor rotating but engine doesn't turn over:
- Starter clutch trouble

Engine won't turn over:
- Valve seizure
- Rocker arm seizure
- Cylinder, piston seizure
- Crankshaft seizure
- Connecting rod small end seizure
- Connecting rod big end seizure
- Transmission gear or bearing seizure
- Camshaft seizure
- Starter idle gear seizure
- Balancer bearing seizure

No fuel flow:
- No fuel in tank
- Fuel pump trouble
- Fuel tank air vent obstructed
- Fuel filter clogged
- Fuel tap clogged
- Fuel line clogged
- Float valve clogged

Engine flooded:
- Fuel level in carburetor float bowl too high
- Float valve worn or stuck open
- Starting technique faulty
- (When flooded, crank the engine with the throttle fully opened to allow more air to reach the engine.)

No spark; spark weak:
- Ignition switch not on
- Engine stop switch turned off
- Clutch lever not pulled in or gear not in neutral
- Battery voltage low
- Spark plug dirty, broken, or maladjusted
- Spark plug cap or high tension wiring trouble
- Spark plug cap shorted or not in good contact
- Spark plug incorrect
- IC igniter trouble
- Neutral, starter lockout, or sidestand switch trouble
- Pickup coil trouble
- Ignition coil trouble
- Ignition or engine stop switch shorted
- Wiring shorted or open
- Fuse blown

Fuel/air mixture incorrect:
- Pilot screw and/or idle adjusting screw maladjusted
- Pilot jet, or air passage clogged
- Air cleaner clogged, poorly sealed, or missing
- Starter jet clogged

Compression Low:
- Spark plug loose
- Cylinder head not sufficiently tightened down
- Cylinder, piston worn
- Piston ring bad (worn, weak, broken, or sticking)
- Piston ring/groove clearance excessive
- Cylinder head gasket damaged
- Cylinder head warped
- Valve spring broken or weak
- Valve not seating properly (valve bent, worn, or carbon accumulation on the seating surface)
- Compression release cam (KACR) sticks open (Engine stalls when moving off)
- HLA (Hydraulic lash adjuster) damaged (worn, seizure, or spring broken)
- HLA oil passage clogged

Poor Running at Low Speed:

Spark weak:
- Battery voltage low
- Spark plug dirty, broken, or maladjusted
- Spark plug cap or high tension wiring trouble
- Spark plug cap shorted or not in good contact
- Spark plug incorrect
- IC igniter trouble
- Pickup coil trouble
- Ignition coil trouble

Fuel/air mixture incorrect:
- Pilot screw maladjusted
- Pilot jet, or air passage clogged
- Needle jet (air bleed pipe), bleed holes clogged
- Pilot passage clogged
- Air cleaner clogged, poorly sealed, or missing
- Starter plunger stuck open
- Fuel level in carburetor float bowl too high or too low
- Fuel tank air vent obstructed
- Intake manifold loose
- Air cleaner or surge tank duct loose
- Air cleaner O-ring damaged
- Fuel pump trouble

Compression low:
- Spark plug loose
- Cylinder head not sufficiently tightened down
- Cylinder, piston worn
- Piston ring bad (worn, weak, broken, or sticking)
- Piston ring/groove clearance excessive
- Cylinder head warped
- Cylinder head gasket damaged
- Valve spring broken or weak
- Valve not seating properly (valve bent, worn, or carbon accumulation on the seating surface)
- KACR sticks open (Engine stalls when moving off)
- HLA seizure

Backfiring when deceleration:
- Vacuum switch valve broken
- Air suction valve trouble

Other:
- IC igniter trouble
- Carburetor vacuum piston doesn't slide smoothly
- Carburetor vacuum piston diaphragm damage
- Engine oil viscosity too high
- Drive train trouble
- Final gear case oil viscosity too high
- Brake dragging
- Over heating
- Clutch slipping
- Air suction valve trouble
- Vacuum switch valve trouble

Poor Running or No Power at High Speed:

Firing incorrect:
- Spark plug dirty, broken, or maladjusted
- Spark plug cap or high tension wiring trouble
- Spark plug cap shorted or not in good contact
- Spark plug incorrect
- IC igniter trouble
- Pickup coil trouble
- Ignition coil trouble

Fuel/air mixture incorrect:
- Starter plunger stuck open
- Main jet clogged or wrong size
- Jet needle or needle jet worn
- Air jet clogged
- Fuel level in carburetor float bowl too high or too low
- Air bleed pipe bleed holes or needle jet clogged
- Air cleaner clogged, poorly sealed, or missing
- Air cleaner or surge tank duct loose
- Air cleaner O-ring damaged
- Starter plunger stuck open
- Water or foreign matter in fuel
- Intake manifold loose
- Fuel to carburetor insufficient
- Fuel tank air vent obstructed
- Fuel tap clogged
- Fuel line clogged
- Fuel pump trouble

Compression low:
- Spark plug loose
- Cylinder head not sufficiently tightened down
- Cylinder, piston worn
- Piston ring bad (worn, weak, broken, or sticking)
- Piston ring/groove clearance excessive
- Cylinder head gasket damaged
- Cylinder head warped
- Valve spring broken or weak
- Valve not seating properly (valve bent, worn, or carbon accumulation on the seating surface.)
- KACR sticks open (Engine stalls when moving off)
- HLA seizure

Knocking:
- Carbon built up in combustion chamber
- Fuel poor quality or incorrect
- Spark plug incorrect
- IC igniter trouble

Miscellaneous:
- Throttle valve won't fully open
- Carburetor vacuum piston doesn't slide smoothly
- Carburetor vacuum piston diaphragm damaged
- Brake dragging
- Clutch slipping
- Overheating
- Engine oil level too high
- Engine oil viscosity too high
- Drive train trouble
- Final gear case oil viscosity too high
- Air suction valve trouble
- Vacuum switch valve trouble
- Catalytic converters melt down due to muffler overheating (KLEEN)

Overheating:

Firing incorrect:
- Spark plug dirty, broken, or maladjusted
- Spark plug incorrect
- IC igniter trouble

Muffler overheating:
- For KLEEN, do not run the engine even if with only one cylinder misfiring or poor running (Request the nearest service facility to correct it)
- For KLEEN, do not push-start with a dead battery (Connect another full-charged battery with jumper cables, and start the engine using the electric starter)
- For KLEEN, do not start the engine under misfire due to spark plug fouling or poor connection of the spark plug
- For KLEEN, do not coast the motorcycle with the ignition switch off (Turn the ignition switch ON and run the engine)
- IC igniter trouble

Troubleshooting Guide

Fuel/air mixture incorrect:
- Main jet clogged or wrong size
- Fuel level in carburetor float bowl too low
- Inlet manifold loose
- Air cleaner or surge tank duct loose
- Air cleaner poorly sealed, or missing
- Air cleaner O-ring damaged
- Air cleaner clogged

Compression high:
- Carbon built up in combustion chamber
- KACR sticks close

Engine load faulty:
- Clutch slipping
- Engine oil level too high
- Engine oil viscosity too high
- Drive train trouble
- Final gear case oil viscosity too high
- Brake dragging

Lubrication inadequate:
- Engine oil level too low
- Engine oil poor quality or incorrect

Water temperature warning system incorrect:
- Water temperature warning light broken
- Water temperature switch broken

Coolant incorrect:
- Coolant level too low
- Coolant deteriorated
- Wrong coolant mixed ratio

Cooling system component incorrect:
- Radiator fin damaged
- Radiator clogged
- Thermostat trouble
- Radiator cap trouble
- Radiator fan switch trouble
- Fan motor broken
- Fan blade damaged
- Water pump not turning
- Water pump impeller damaged

Over Cooling:

Cooling system component incorrect:
- Radiator fan switch trouble
- Thermostat trouble

Clutch Operation Faulty:

Clutch slipping:
- Friction plate worn or warped
- Steel plate worn or warped
- Clutch spring broken or weak
- Clutch slave cylinder trouble
- Clutch hub or housing unevenly worn
- Clutch master cylinder trouble

Clutch not disengaging properly:
- Clutch plate warped or too rough
- Clutch spring compression uneven
- Engine oil deteriorated
- Engine oil viscosity too high
- Engine oil level too high
- Clutch housing frozen on drive shaft
- Clutch slave cylinder trouble
- Clutch hub nut loose
- Clutch hub spline damaged
- Clutch friction plate installed wrong
- Clutch fluid leakage
- Clutch fluid deteriorated
- Clutch master cylinder primary or secondary cup damaged
- Clutch master cylinder scratched inside
- Air in the clutch fluid line

Gear Shifting Faulty:

Doesn't go into gear; shift pedal doesn't return:
- Clutch not disengaging
- Shift fork bent or seized
- Gear stuck on the shaft
- Gear set lever binding
- Shift return spring weak or broken
- Shift return spring pin loose
- Shift mechanism arm spring broken
- Shift mechanism arm broken
- Shift pawl broken

Jumps out of gear:
- Shift fork ear worn, bent
- Gear groove worn
- Gear dogs and/or dog holes worn
- Shift drum groove worn
- Gear set lever spring weak or broken
- Shift fork guide pin worn
- Drive shaft, output shaft, and/or gear splines worn

Overshifts:
- Gear set lever spring weak or broken
- Shift mechanism arm spring broken

Abnormal Engine Noise:

Knocking:
- IC igniter trouble
- Carbon built up in combustion chamber
- Fuel poor quality or incorrect
- Spark plug incorrect
- Overheating

Piston slap:
- Cylinder/piston clearance excessive
- Cylinder, piston worn
- Connecting rod bent
- Piston pin, piston pin hole worn

Valve noise:
Engine not sufficiently warmed up after HLA installation
HLA damaged (worn, seizure, or spring broken)
HLA aeration due to low oil level
Air in hydraulic lash adjuster
Metal chips or dust jammed in hydraulic lash adjuster
Engine operated in red zone
Valve spring broken or weak
Camshaft bearing portion worn

Other noise:
Connecting rod small end clearance excessive
Connecting rod big end clearance excessive
Piston ring worn, broken, or stuck
Piston seizure, damage
Cylinder head gasket leaking
Exhaust pipe leaking at cylinder head connection
Crankshaft runout excessive
Engine mounts loose
Crankshaft bearing worn
Primary gear worn or chipped
Camshaft chain tensioner trouble
Camshaft chain, sprocket, guide worn
Air suction valve damaged
Vacuum switch valve damaged
Alternator rotor loose
Catalytic converters melt down due to muffler overheating (KLEEN)
Balancer gear worn or chipped
Balancer shaft position maladjusted
Balancer bearing worn
Balancer shaft coupling rubber damper damaged
Water pump chain, sprocket worn

Abnormal Drive Train Noise:

Clutch noise:
Clutch rubber damper weak or damaged
Clutch housing/friction plate clearance excessive
Clutch housing gear worn
Wrong installation of outside friction plate

Transmission noise:
Bearings worn
Transmission gears worn or chipped
Metal chips jammed in gear teeth
Engine oil insufficient

Drive line noise:
Bevel gear bearings worn
Bevel gears worn or chipped
Bevel gears maladjusted
Rear wheel coupling damaged
Insufficient lubricant

Abnormal Frame Noise:

Front fork noise:
Oil insufficient or too thin
Spring weak or broken

Rear shock absorber noise:
Shock absorber damaged

Disc brake noise:
Pad installed incorrectly
Pad surface glazed
Disc warped
Caliper trouble
Master cylinder damaged

Other noise:
Bracket, nut, bolt, etc. not properly mounted or tightened

Oil Pressure Warning Light Goes On:

Engine oil pump damaged
Engine oil screen clogged
Engine oil filter clogged
Engine oil level too low
Engine oil viscosity too low
Camshaft bearing portion worn
Crankshaft bearings worn
Oil pressure switch damaged
Oil pressure switch lead damaged
Relief valve stuck open
O-ring at the oil pipe in the crankcase damaged

Exhaust Smokes Excessively:

White smoke:
Piston oil ring worn
Cylinder worn
Valve oil seal damaged
Valve guide worn
Engine oil level too high

Black smoke:
Air cleaner clogged
Main jet too large or fallen off
Starter plunger stuck open
Fuel level in carburetor float bowl too high

Brown smoke:
Main jet too small
Fuel level in carburetor float bowl too low
Air cleaner or surge tank duct loose
Air cleaner O-ring damaged
Air cleaner poorly sealed or missing

Handling and/or Stability Unsatisfactory:

Handlebar hard to turn:
Cable routing incorrect
Hose routing incorrect
Wiring routing incorrect
Steering stem nut too tight
Steering stem bearing damaged
Steering stem bearing lubrication inadequate
Steering stem bent
Tire air pressure too low

Troubleshooting Guide

Handlebar shakes or excessively vibrates:
- Tire worn
- Swingarm sleeve or pivot bearings worn
- Rim warped, or not balanced
- Wheel bearing worn
- Handlebar clamp bolts loose
- Steering stem head nut loose
- Front, rear axle runout excessive

Handlebar pulls to one side:
- Frame bent
- Swingarm bent or twisted
- Swingarm pivot shaft runout excessive
- Steering maladjusted
- Front fork bent
- Right and left front fork oil level uneven

Shock absorption unsatisfactory:
- (Too hard)
- Front fork oil excessive
- Front fork oil viscosity too high
- Rear shock absorber adjustment too hard
- Tire air pressure too high
- Front fork bent
- (Too soft)
- Tire air pressure too low
- Front fork oil insufficient and/or leaking
- Front fork oil viscosity too low
- Rear shock adjustment too soft
- Front fork, rear shock absorber spring weak
- Rear shock absorber oil leaking

Brake Doesn't Hold:
- Air in the brake line
- Pad or disc worn
- Brake fluid leakage
- Disc warped
- Contaminated pad
- Brake fluid deteriorated
- Primary or secondary cup damaged in master cylinder
- Master cylinder scratched inside

Battery Trouble:

Battery discharged:
- Charge insufficient
- Battery faulty (too low terminal voltage)
- Battery leads making poor contact
- Load excessive (e.g., bulb of excessive wattage)
- Ignition switch trouble
- Alternator trouble
- Wiring faulty
- Regulator/rectifier trouble

Battery overcharged:
- Alternator trouble
- Regulator/rectifier trouble
- Battery faulty

General Lubrication

Lubrication (Periodic Maintenance)

- Before lubricating each part, clean off any rusty spots with rust remover and wipe off any grease, oil, dirt, or grime.
- Lubricate the points listed below with indicated lubricant.

NOTE

Perform the general lubrication in accordance with the Periodic Maintenance Chart or whenever the vehicle has been operated under wet or rainy conditions, or especially after using a high-pressure water spray.

Pivots: Lubricate with Motor Oil.

Sidestand
Rear Brake Rod Joint

Points: Lubricate with Grease.

Sidestand
Throttle Inner Cable Upper Ends [A]
Speedometer Inner Cable*
Brake Pedal
Clutch Lever (Apply silicone grease)
Brake Lever (Apply silicone grease)
(*): Grease the lower part of the inner cable sparingly.

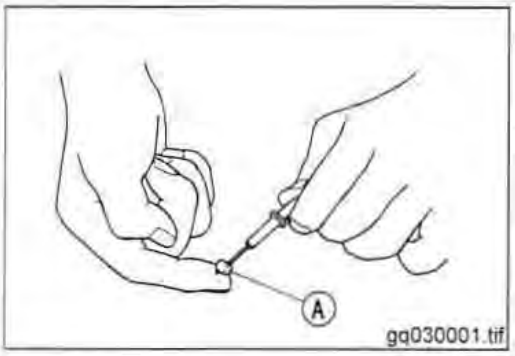

gq030001.tif

Cables: Lubricate with Cable Lubricant.

Choke Cable
Throttle Cables

- Lubricate the cables by seeping the oil between the cable and housing.

The cable may be lubricated by using a commercially available pressure cable lubricator with an aerosol cable lubricant.

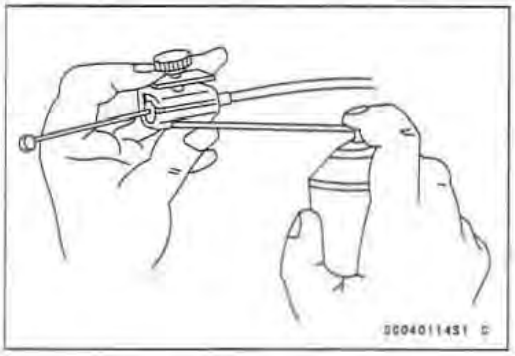
gq030002.tif

- With the cable disconnected at both ends, the cable should move freely [A] within the cable housing.

★ If cable movement is not free after lubricating, if the cable is frayed, or if the cable housing is kinked, replace the cable.

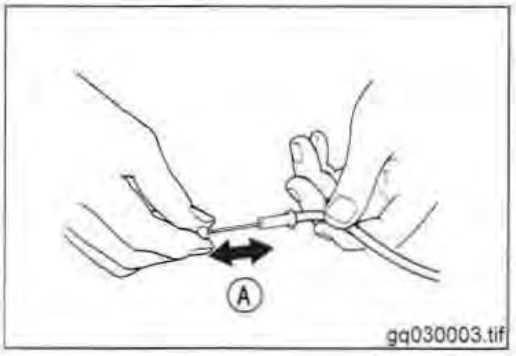

gq030003.tif

Nut, Bolt, and Fastener Tightness

Tightness Inspection (Periodic Inspection)

● Check the tightness of the bolts and nuts listed here accordance with the Periodic Maintenance Chart. Also, check to see that each cotter pin is in place and in good condition.

NOTE

○ *For the engine fasteners, check the tightness of them when the engine is cold (at room temperature).*

★ If there are loose fasteners, retighten them to the specified torque following the specified tightening sequence. Refer to the Torque and Locking Agent section of the General Information chapter for torque specifications. For each fastener, first loosen it by 1/2 turn, then tighten it.

★ If cotter pins are damaged, replace them with new ones.

Nut, Bolt and Fastener to be checked

Wheels:
- Front Axle Nut
- Front Axle Clamp Bolt
- Rear Axle Nut Cotter Pin
- Rear Axle Nut

Final Drive:
- Final Gear Case Mounting Nuts

Brakes:
- Front Master Cylinder Clamp Bolts
- Caliper Mounting Bolts
- Rear Master Cylinder Mounting Bolts
- Rear Caliper Holder Bolt
- Brake Lever Pivot Nut
- Brake Pedal Bolt
- Brake Rod Joint Cotter Pin

Suspension:
- Front Fork Clamp Bolts
- Front Fender Mounting Bolts
- Rear Shock Absorber Mounting Nuts
- Swingarm Pivot Shaft

Steering:
- Stem Head Nut
- Handlebar Clamp Bolts

Engine:
- Throttle Cable Adjuster Locknuts
- Engine Mounting Bolts and Nuts
- Shift Pedal Bolts
- Muffler Mounting Bolts and Nuts
- Muffler Connecting Clamp Bolts
- Exhaust Pipe Holder Nuts
- Clutch Master Cylinder Clamp Bolts
- Clutch Lever Pivot Nut
- Radiator Mounting Bolt
- Clutch Master Cylinder Clamps

Others:
- Sidestand Bolt and Nut
- Footpeg Mounting Bolts
- Downtube Bolts (Right)
- Windshield Bolts
- Saddlebag Bolts

Unit Conversion Table

Prefixes for Units:

Prefix	Symbol	Power
mega	M	× 1 000 000
kilo	k	× 1 000
centi	c	× 0.01
milli	m	× 0.001
micro	μ	× 0.000001

Units of Mass:

kg	×	2.205	=	lb
g	×	0.03527	=	oz

Units of Volume:

L	×	0.2642	=	gal (US)
L	×	0.2200	=	gal (imp)
L	×	1.057	=	qt (US)
L	×	0.8799	=	qt (imp)
L	×	2.113	=	pint (US)
L	×	1.816	=	pint (imp)
mL	×	0.03381	=	oz (US)
mL	×	0.02816	=	oz (imp)
mL	×	0.06102	=	cu in

Units of Force:

N	×	0.1020	=	kg
N	×	0.2248	=	lb
kg	×	9.807	=	N
kg	×	2.205	=	lb

Units of Length:

km	×	0.6214	=	mile
m	×	3.281	=	ft
mm	×	0.03937	=	in

Units of Torque:

N·m	×	0.1020	=	kg·m
N·m	×	0.7376	=	ft·lb
N·m	×	8.851	=	in·lb
kg·m	×	9.807	=	N·m
kg·m	×	7.233	=	ft·lb
kg·m	×	86.80	=	in·lb

Units of Pressure:

kPa	×	0.01020	=	kg/cm^2
kPa	×	0.1450	=	psi
kPa	×	0.7501	=	cm Hg
kg/cm^2	×	98.07	=	kPa
kg/cm^2	×	14.22	=	psi
cm Hg	×	1.333	=	kPa

Units of Speed:

km/h	×	0.6214	=	mph

Units of Power:

kW	×	1.360	=	PS
kW	×	1.341	=	HP
PS	×	0.7355	=	kW
PS	×	0.9863	=	HP

Units of Temperature:

$$\frac{9(°C+40)}{5} - 40 = °F \qquad \frac{5(°F+40)}{9} - 40 = °C$$

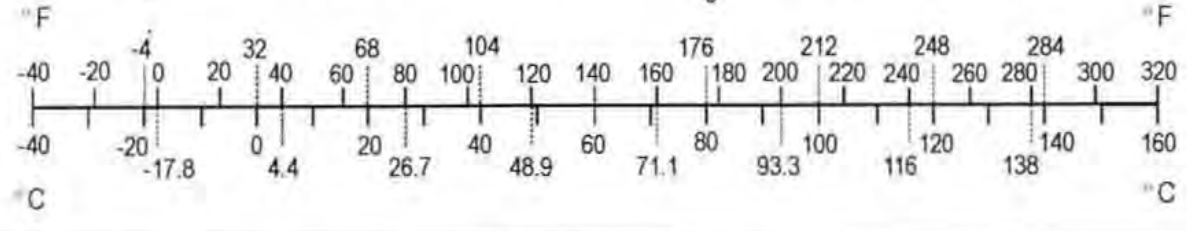

MODEL APPLICATION

Year	Model	Beginning Frame No.
1998	VN1500-G1	VNT50G-000001 (Malaysia) JKBVNAG1□WA000001 (Australia) JKAVNT50GGA000001 (General)
	VN1500-H1	JKAVNT50GHA000001 (Germany, Switzerland, Austria)
1999	VN1500-G1/G1A	JKBVNAG1□XA000001 (US, Canada)
	VN1500-G2	JKBVNAG1□XA010001 (Australia) JKAVNT50GGA010001 (General)
	VN1500-H2	JKAVNT50GHA010001 (Germany, Switzerland, Austria)
2000	VN1500-G2A	JKBVNAG1□YA028001 (US)
2001	VN1500-G3	JKBVNAG1□1A033001 (US)

□ : This digit in the frame number changes from one machine to another.

Kawasaki
KAWASAKI HEAVY INDUSTRIES, LTD.
Consumer Products & Machinery Group
Part No. 99924-1241-02
Printed in Japan