Kawasaki

VN1500



Motorcycle

http://manuals.magnamaniac.com

Service Manual

Quick Reference Guide

General Information	1
Fuel System	2
Cooling System	3
Engine Top End	4
Clutch	5
Engine Lubrication System	6
Engine Removal/Installation	7
Crankshaft/Transmission	8
Wheels/Tires	9
Final Drive	10
Brakes	11
Suspension	12
Steering	13
Frame	14
Electrical System	15
Appendix	16

This quick reference guide will assist you in locating a desired topic or procedure.

- Bend the pages back to match the black tab of the desired chapter number with the black tab on the edge at each table of contents page.
- Refer to the sectional table of contents for the exact pages to locate the specific topic required.

http://manuals.magnamaniac.com

Kawasaki

VN1500

VN1500A:
VULCAN 88 (US and Canada)
VN-15 (Others)
VN1500B:
VULCAN 88 SE (US and Canada)
VN-15 SE (Others)

Motorcycle Service Manual

All rights reserved. No parts of this publication may be reproduced, stored in a retrieval system, or transmitted in any form or by any means, electronic mechanical photocopying, recording or otherwise, without the prior written permission of Quality Assurance Department/Consumer Products Group/Kawasaki Heavy Industries, Ltd., Japan.

No liability can be accepted for any inaccuracies or omissions in this publication, although every possible care has been taken to make it as complete and accurate as possible.

The right is reserved to make changes at any time without prior notice and without incurring an obligation to make such changes to products manufactured previously. See your Motorcycle dealer for the latest information on product improvements incorporated after this publication.

All information contained in this publication is based on the latest product information available at the time of publication. Illustrations and photographs in this publication are intended for reference use only and may not depict actual model component parts.

http://manuals.magnamaniac.com

© Kawasaki Heavy Industries, Ltd., 1987,1990,1991,1993,1995, 1997,1999, Eighth Edition (1) : Mar. 20, 1999 (K)

LIST OF ABBREVIATIONS

A	ampere(s)	lb	pound(s)
ABDC	after bottom dead center	m	meter(s)
AC	alternating current	min	minute(s)
ATDC	after top dead center	N	newton(s)
BBDC	before bottom dead center	Pa	pascal(s)
BDC	bottom dead center	PS	horsepower
BTDC	before top dead center	psi	pound(s) per square inch
°C	degree(s) Celsius	r	revolution
DC	direct current	rpm	revolution(s) per minute
F	farad(s)	TDC	top dead center
°F	degree(s) Fahrenheit	TIR	total indicator reading
ft	foot, feet	V	volt(s)
g	gram(s)	W	watt(s)
h	hour(s)	Ω	ohm(s)
L	liter(s)		

Read OWNER'S MANUAL before operating
http://manuals.magnamaniac.com

EMISSION CONTROL INFORMATION

To protect the environment in which we all live, Kawasaki has incorporated crankcase emission (1) and exhaust emission (2) control systems in compliance with applicable regulations of the United States Environmental Protection Agency and California Air Resources Board. Additionally, Kawasaki has incorporated an evaporative emission control system (3) in compliance with applicable regulations of the California Air Resources Board on vehicles sold in California only.

1. Crankcase Emission Control System
   This system eliminates the release of crankcase vapors into the atmosphere. Instead, the vapors are routed through an oil separator to the intake side of the engine. While the engine is operating, the vapors are drawn into combustion chamber, where they are burned along with the fuel and air supplied by the carburetion system.
2. Exhaust Emission Control System
   This system reduces the amount of pollutants discharged into the atmosphere by the exhaust of this motorcycle. The fuel and ignition systems of this motorcycle have been carefully designed and constructed to ensure an efficient engine with low exhaust pollutant levels.
3. Evaporative Emission Control System
   Vapors caused by fuel evaporation in the fuel system are not vented into the atmosphere. Instead, fuel vapors are routed into the running engine to be burned, or stored in a canister when the engine is stopped. Liquid fuel is caught by a vapor separator and returned to the fuel tank.

The Clean Air Act, which is the Federal law covering motor vehicle pollution, contains what is commonly referred to as the Act's "tampering provisions."

"Sec. 203(a) The following acts and the causing thereof are prohibited...

(3)(A) for any person to remove or render inoperative any device or element of design installed on or in a motor vehicle or motor vehicle engine in compliance with regulations under this title prior to its sale and delivery to the ultimate purchaser, or for any manufacturer or dealer knowingly to remove or render inoperative any such device or element of design after such sale and delivery to the ultimate purchaser.

(3)(B) for any person engaged in the business of repairing, servicing, selling, leasing, or trading motor vehicles or motor vehicle engines, or who operates a fleet of motor vehicles knowingly to remove or render inoperative any device or element of design installed on or in a motor vehicle or motor vehicle engine in compliance with regulations under this title following its sale and delivery to the ultimate purchaser..."

(Continued on next page.)

http://manuals.magnamaniac.com

NOTE

- *The phrase " remove or render inoperative any device or element of design " has been generally interpreted as follows :*
  1. *Tampering does not include the temporary removal or rendering inoperative of devices or elements of design in order to perform maintenance.*
  2. *Tampering could include :*
     a. *Maladjustment of vehicle components such that the emission standards are exceeded.*
     b. *Use of replacement parts or accessories which adversely affect the performance or durability of the motorcycle.*
     c. *Addition of components or accessories that result in the vehicle exceeding the standards.*
     d. *Permanently removing, disconnecting, or rendering inoperative any component or element of design of the emission control systems.*

WE RECOMMEND THAT ALL DEALERS OBSERVE THESE PROVISIONS OF FEDERAL LAW , THE VIOLATION OF WHICH IS PUNISHABLE BY CIVIL PENALTIES NOT EXCEEDING $10,000 PER VIOLATION.

TAMPERING WITH NOISE CONTROL SYSTEM PROHIBITED

Federal law prohibits the following acts or the causing thereof: (1) The removal or rendering inoperative by any person other than for purposes of maintenance, repair, or replacement, of any device or element of design incorporated into any new vehicle for the purpose of noise control prior to its sale or delivery to the ultimate purchaser or while it is in use, or (2) the use of the vehicle after such device or element of design has been removed or rendered inoperative by any person.

Among those acts presumed to constitute tampering are the acts listed below:

- Replacement of the original exhaust system or muffler with a component not in compliance with Federal regulations.
- Removal of the muffler(s) or any internal portion of the muffler(s).
- Removal of the air box or air box cover.
- Modifications to the muffler(s) or air intake system by cutting, drilling, or other means if such modifications result in increased noise levels.

Foreword

This manual is designed primarily for use by trained mechanics in a properly equipped shop. However, it contains enough detail and basic information to make it useful to the owner who desires to perform his own basic maintenance and repair work. A basic knowledge of mechanics, the proper use of tools, and workshop procedures must be understood in order to carry out maintenance and repair satisfactorily. Whenever the owner has insufficient experience or doubts his ability to do the work, all adjustments, maintenance, and repair should be carried out only by qualified mechanics.

In order to perform the work efficiently and to avoid costly mistakes, read the text, thoroughly familiarize yourself with the procedures before starting work, and then do the work carefully in a clean area. Whenever special tools or equipment are specified, do not use makeshift tools or equipment. Precision measurements can only be made if the proper instruments are used, and the use of substitute tools may adversely affect safe operation.

For the duration of your warranty period, especially, we recommend that all repairs and scheduled maintenance be performed in accordance with this service manual. Any owner maintenance or repair procedure not performed in accordance with this manual may void the warranty.

To get the longest life out of your Motorcycle:

- Follow the Periodic Maintenance Chart in the Service Manual.
- Be alert for problems and non-scheduled maintenance.
- Use proper tools and genuine Kawasaki Motorcycle parts. Special tools, gauges, and testers that are necessary when servicing Kawasaki motorcycles are introduced by the Special Tool Manual. Genuine parts provided as spare parts are listed in the Parts Catalog.
- Follow the procedures in this manual carefully. Don't take shortcuts.
- Remember to keep complete records of maintenance and repair with dates and any new parts installed.

How to Use this Manual

In preparing this manual, we divided the product into its major systems. These systems became the manual's chapters. All information for a particular system from adjustment through disassembly and inspection is located in a single chapter.

The Quick Reference Guide shows you all of the product,s systems and assists in locating their chapters. Each chapter in turn has its own comprehensive Table of Contents.

The Periodic Maintenance Chart is located in the General Information chapter. The chart gives a time schedule for required maintenance operations.

If you want spark plug information, for example, go to the Periodic Maintenance Chart first. The chart tells you how frequently to clean and gap the plug. Next, use the Quick Reference Guide to locate the Electrical System chapter. Then, use the Table of Contents on the first page of the chapter to find the Spark Plug section.

Whenever you see these WARNING and CAUTION symbols, heed their instructions! Always follow safe operating and maintenance practices.

WARNING

○This warning symbol identifies special instructions or procedures which, if not correctly followed, could result in personal injury, or loss of life.

CAUTION

○This caution symbol identifies special instructions or procedures which, if not strictly observed, could result in damage to or destruction of equipment.

This manual contains five more symbols (in addition to WARNING and CAUTION) which will help you distinguish different types of information.

http://manuals.magnamaniac.com

NOTE

○This note symbol indicates points of particular interest for more efficient and convenient operation.

- ●Indicates a procedural step or work to be done.
- ○Indicates a procedural sub-step or how to do the work of the procedural step it follows. It also precedes the text of a WARNING, CAUTION, or NOTE.
- ★Indicates a conditional step or what action to take based on the results of the test or inspection in the procedural step or sub-step it follows.
- ☆Indicates a conditional sub-step or what action to take based upon the results of the conditional step it follows.

In most chapters an exploded view illustration of the system components follows the Table of Contents. In these illustrations you will find the instructions indicating which parts require specified tightening torque, oil, grease or a locking agent during assembly.

http://manuals.magnamaniac.com

1

General Information

Table of Contents

Before Servicing 1-2
Model Identification 1-4
General Specifications 1-5
Periodic maintenance Chart 1-7
Torque and Locking Agent 1-8
Cable, Wire and Hose Routing 1-12

http://manuals.magnamaniac.com

Before Servicing

Before starting to service a motorcycle, careful reading of the applicable section is recommended to eliminate unnecessary work. Photographs, diagrams, notes, cautions, warnings, and detailed descriptions have been included wherever necessary. Nevertheless, even a detailed account has limitations, a certain amount of basic knowledge is also required for successful work.

Especially note the following:

(1) Dirt

Before removal and disassembly, clean the motorcycle. Any dirt entering the engine or other parts will work as an abrasive and shorten the life of the motorcycle. For the same reason, before installing a new part, clean off any dust or metal filings.

(2) Battery Ground

Remove the ground (−) lead from the battery before performing any disassembly operations on the motorcycle. When installing, connect the positive (+) lead first, then the negative (−) lead to the battery. This prevents: (a) the possibility of accidentally turning the engine over while partially disassembled. (b) sparks at electrical connections which will occur when they are disconnected. (c) damage to electrical parts.

(3) Installation, Assembly

Generally, installation or assembly is the reverse of removal or disassembly. But if this Service Manual has installation or assembly procedures, follow them. Note parts locations and cable, wire, and hose routing during removal or disassembly so they can be installed or assembled in the same way. It is preferable to mark and record the locations and routing as much as possible.

(4) Tightening Sequence

Generally, when installing a part with several bolts, nuts, or screws, start them all in their holes and tighten them to a snug fit. Then tighten them evenly in a cross pattern. This is to avoid distortion of the part and/or causing gas or oil leakage. Conversely when loosening the bolts, nuts, or screws, first loosen all of them by about a quarter turn and then remove them. Where there is a tightening sequence indication in this Service Manual, the bolts, nuts, or screws must be tightened in the order and method indicated.

(5) Torque

When torque values are given in this Service Manual, use them. Either too little or too much torque may lead to serious damage. Use a good quality, reliable torque wrench.

(6) Force

Common sense should dictate how much force is necessary in assembly and disassembly. If a part seems especially difficult to remove or install, stop and examine what may be causing the problem. Whenever tapping is necessary, tap lightly using a wooden or plastic-faced mallet. Use an impact driver for screws (particularly for the removal of screws held by a locking agent) in order to avoid damaging the screw heads.

(7) Edges

Watch for sharp edges, especially during major engine disassembly and assembly. Protect your hands with gloves or a piece of thick cloth when lifting the engine or turning it over.

(8) High-Flash Point Solvent

A high-flash point solvent is recommended to reduce fire danger. A commercial solvent commonly available in North America is Stoddard solvent (generic name). Always follow manufacturer and container directions regarding the use of any solvent.

(9) Gasket, O-Ring

Do not reuse a gasket or O-ring once it has been in service. The mating surfaces around the gasket should be free of foreign matter and perfectly smooth to avoid oil or compression leaks.

(10) Liquid Gasket, Non-Permanent Locking Agent

Follow manufacturer's directions for cleaning and preparing surfaces where these compounds will be used. Apply sparingly. Excessive amounts may block engine oil passages and cause serious damage. An example of a non-permanent locking agent commonly available in North America is Loctite Lock'n Seal (Blue).

(11) Press

A part installed using a press or driver, such as a wheel bearing, should first be coated with oil on its outer or inner circumference so that it will go into place smoothly.

http://manuals.magnamaniac.com

(12) Ball Bearing and Needle Bearing

Do not remove a ball bearing or a needle bearing unless it is absolutely necessary. Replace any ball or needle bearings that were removed with new ones, as removal generally damages bearings. Install bearings with the marked side facing out applying pressure evenly with a suitable driver. Only press on the race that

forms the press fit with the base component to avoid damaging the bearings. This prevents severe stress on the balls or needles and races, and prevent races and balls or needles from being dented. Press a ball bearing until it stops at the stops in the hole or on the shaft.

(13) Oil Seal and Grease Seal

Replace any oil or grease seals that were removed with new ones, as removal generally damages seals.

When pressing in a seal which has manufacturer's marks, press it in with the marks facing out. Seals should be pressed into place using a suitable driver, which contacts evenly with the side of seal, until the face of the seal is even with the end of the hole. Before a shaft passes through a seal, apply a little high temperature grease on the lips to reduce rubber to metal friction.

(14) Circlip, Retaining Ring, and Cotter Pin

Replace any circlips, retaining rings, and cotter pins that were removed with new ones, as removal weakens and deforms them. When installing circlips and retaining rings, take care to compress or expand them only enough to install them and no more.

(15) Lubrication

Engine wear is generally at its maximum while the engine is warming up and before all the rubbing surfaces have an adequate lubricative film. During assembly, oil or grease (whichever is more suitable) should be applied to any rubbing surface which has lost its lubricative film. Old grease and dirty oil should be cleaned off. Deteriorated grease has lost its lubricative quality and may contain abrasive foreign particles.

Don't use just any oil or grease. Some oils and greases in particular should be used only in certain applications and may be harmful if used in an application for which they are not intended. This manual makes reference to molybdenum disulfide grease (MoS_2) in the assembly of certain engine and chassis parts. Always check manufacturer recommendations before using such special lubricants.

(16) Electrical Wires

All the electrical wires are either single-color or two-color and, with only a few exceptions, must be connected to wires of the same color. On any of the two-color wires there is a greater amount of one color and a lesser amount of a second color, so a two-color wire is identified by first the primary color and then the secondary color. For example, a yellow wire with thin red stripes is referred to as a "yellow/red" wire; it would be a "red/yellow" wire if the colors were reversed to make red the main color.

Wire (cross-section)	Name of Wire Color
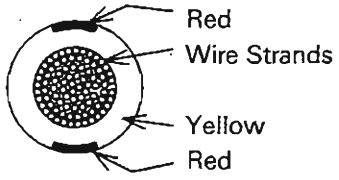	Yellow/Red

(17) Replacement Parts

When there is a replacement instruction, replace these parts with new ones every time they are removed. These replacement parts will be damaged or lose their original function once removed.

(18) Inspection

When parts have been disassembled, visually inspect these parts for the following conditions or other damage. If there is any doubt as to the condition of them, replace them with new ones.

Abrasion	Crack	Hardening	Warp
Bent	Dent	Scratch	Wear
Color change	Deterioration	Seizure	

(19) Specifications

Specification terms are defined as follows:

"Standards": show dimensions or performances which brand-new parts or systems have.

"Service Limits": indicate the usable limits. If the measurement shows excessive wear or deteriorated performance, replace the damaged parts.

http://manuals.magnamaniac.com

Model Identification

VN1500-A1 Right Side View



VN1500-B1 Left Side View



http://manuals.magnamaniac.com

General Specifications

Items	VN1500-A1/A2/A3/A4/A5/A6/A7/A8/A9/A10/A11/A12/A13	VN1500-B1/B2/B3/B4/B5/B6
Dimensions:		
Overall length	2 390 mm, (A)(F) 2 385 mm, (E) 2 410 mm, (I) 2 375 mm,	2 370 mm, (E) 2 410 mm
Overall width	895 mm	←
Overall height	1 190 mm, (A)(E) 1 180 mm	1 210 mm, (E) 1 195 mm
Wheelbase	1 605 mm	1 635 mm, (E) 1 630 mm
Road clearance	150 mm, (A)(E) 135 mm	165 mm, (E) 160 mm
Seat height	720 mm, (A)(E) 750 mm	710 mm, (E) 745 mm
Dry weight	252 kg, (Cal) 252.5 kg, (E) 257 kg, (G) 256 kg	248 kg, (Cal) 248.5 kg (E) 249 kg
Curb weight: Front	126 kg, (Cal) 128 kg	121 kg, (Cal) 121.5 kg
Rear	154 kg, (Cal) 154.5 kg, (E) 157 kg, (G) 156 kg	154 kg, (E) 155 kg
Fuel tank capacity	16 L	12 L
Performance:		
Minimum turning radius	3.0 mm, (A)(E) 2.7 mm	3.0 m
Engine:		
Type	4-stroke, SOHC,2-cylinder	←
Cooling system	Liquid-cooled	←
Bore and stroke	102.0 × 90.0 mm	←
Displacement	1 470mL	←
Compression ratio	9.0 : 1	←
Maximum horsepower	53.0 kW (72 PS) @4 500 r/min (rpm),(US) — (E) 51.5 kW (70 PS) @4 500 r/min (rpm) (F) 50.0 kW (–)@4 500 r/min (rpm)(UTAC's norm) (G) 51.5 kW (70 PS) @4 500 r/min (rpm)(DIN) (W) 34.9 kW (47.5 PS) @3 800 r/min (rpm) A4~(E) 44.9 kW (61 PS) @4 300 r/min (rpm) A4~(G) 44.9 kW (61 PS) @4 300 r/min (rpm)(DIN) A5~(F) 43.5 kW (–) @4 300 r/min (rpm)(UTAC's norm)	←, *1
Maximum torque	123.6 N-m (12.6 kg-m,91 ft-lb) @3 000 r/min (rpm) (F) —,(US) — (G) 123.6 N-m (12.6 kg-m,91 ft-lb) @3 000 r/min (rpm)(DIN) (W) 105.9 N-m (10.8 kg-m,78.1 ft-lb) @2 300 r/min (rpm) A4~(E) 112.8 N-m (11.5 kg-m,83.2 ft-lb) @3 300 r/min (rpm) A4~(G) 112.8 N-m (11.5 kg-m,83.2 ft-lb) @3 300 r/min (rpm)(DIN)	←, *2
Carburetor system	Carburetors, Keihin CVK36 × 2	←
Starting system	Electric starter	←
Ignition system	Battery and coil (transistorized)	←
Timing advance	Electronically advanced	←
Ignition timing	5° BTDC @800 r/min (rpm)	←, (W) 5° BTDC @900 r/min (rpm)
Spark plug	NGK DPR7EA-9 or ND X22EPR-U9 (A)(I)(U) NGK DPR7EA-9 or ND X22EPR-U9 A11~ : (U) NGK DPR7EA-9 or ND X22EPR-U9	←
Cylinder numbering method	Front to Rear, 1-2	←
Firing order	1-2	←
Valve timing:		
Inlet Open	22° BTDC	←
Close	66° ABDC	←
Duration	268°	←
Exhaust Open	66° BBDC	←
Close	26° ATDC	←
Duration	272°	←
Lubrication system	Forced lubrication (wet sump)	←
Engine oil: Grade	SE, SF, or SG class	←
Viscosity	SAE 10W-40, 10W-50, 20W-40, 20W-50	←
Capacity	3.5 L	←

http://manuals.magnamaniac.com

Items	VN1500-A1/A2/A3/A4/A5/A6/A7/A8/A9/A10/A11/A12/A13	VN1500-B1/B2/B3/B4/B5/B6
Drive Train:		
Primary reduction system:		
Type	Gear	←
Reduction ratio	1.517 (85/56)	←
Clutch type:	Wet multi disc	←
Transmission:		
Type	4-speed, constant mesh, return shift	←
Gear ratios: 1st	2.500 (40/16)	←
2nd	1.590 (35/22), A11~1.375 (33/24)	←
3rd	1.192 (31/26), A11~1.035 (29/28)	←
4th	0.965 (28/29), A11~0.781 (25/32)	←
Final drive system:		
Type	Shaft	←
Reduction ratio	2.619 (15/21×33/9)	←
Overall drive ratio	3.838, A11~3.105 @Top gear	←
Final gear case oil:		
Type	API GL-5 Hypoid gear oil	←
	SAE90 (above 5°C)	←
	SAE80 (below 5°C)	←
Capacity	220 mL	←
Frame:		
Type	Tubular, double cradle	←
Caster (rake angle)	31°	33°, (E) 32.5°
Trail	128 mm	138 mm, (E) 132 mm
Front tire: Type	Tubeless	Tube
Size	100/90-19 57H	←
Rear tire: Type	Tubeless	Tube
Size	150/90-15 74H or 150/90-15 M/C 74H	←or 150/90B15 M/C 74H
Front suspension:		
Type	Telescopic fork	←
Wheel travel	150 mm	←
Rear suspension:		
Type	Swingarm	←
Wheel travel	100 mm	←
Brake type: Front	Single disc	←
Rear	Single disc	←
Electrical Equipment:		
Battery	12 V 20 Ah	←
Headlight: Type	Semi-sealed beam	←
Bulb	12 V 60/55 W (quartz-halogen)	←
Tail/brake light	12 V 87/27 W×2, (A)(E) 12 V 5/21 W×2	←
Alternator: Type	Three-phase AC	←
Rated output	25 A @6 000 r/min (rpm), 14 V	←

Specifications are subject to change without notice, and may not apply to every country.

(A) : Australian Model
(Au) : Austrian Model
(Cal) : California Model
(E) : European Model
(F) : French Model
(Fi) : Finnish Model
(G) : West German Model
(I) : Italian Model
(Sd) : Swedish Model
(U) : U.S.A. Model
(UK) : UK Model
(W) : Switzerland Model

*1 (Au)(W) 34.9 kW (47.5 PS) @3 800 r/min (rpm)
(E) 51.5 kW (70 PS) @5 000 r/min (rpm)
(G) 51.5 kW (70 PS) @5 000 r/min (rpm)(DIN)
B4~ (E) 45.7 kW (–) @5 000 r/min (rpm)(UTAC's norm)
B4~ (G) 47.1 kW (64 PS) @5 000 r/min (rpm)(DIN)
B4~ (I)(Sd)(UK) 47.1 kW (64 PS) @5 000 r/min (rpm)
B5~ (Fi) 47.1 kW (64 PS) @5 000 r/min (rpm)
(US) —

*2 (Au)(W) 105.9 N-m (10.8 kg-m,78.1 ft-lb) @2 300 r/min (rpm)
(E) 127.5 Nm (13.0 kg-m,94.0 ft-lb) @3 000 r/min (rpm)
(G) 127.5 Nm (13.0 kg-m,94.0 ft-lb) @3 000 r/min (rpm)(DIN)
B4~ (G) 117.7 N-m (12.0 kg-m,86.8 ft-lb) @3 300 r/min (rpm)(DIN)
B4~ (I)(Sd)(UK) 117.7 N-m (12.0 kg-m,86.8 ft-lb) @3 300 r/min (rpm)
B5~ (Fi) 117.7 N-m (12.0 kg-m,86.8 ft-lb) @3 300 r/min (rpm)
(US) —

http://manuals.magnamanuals.com

Periodic Maintenance Chart (Other than US and Canada)

The scheduled maintenance must be done in accordance with this chart to keep the motorcycle in good running condition. **The initial maintenance is vitally important and must not be neglected.**

FREQUENCY / OPERATION	Whichever comes first ➡ / Every ⬇	*ODOMETER READING							
		1 000km (600 mile)	6 000km (4 000 mile)	12 000km (7 500 mile)	18 000km (12 000 mile)	24 000km (15 000 mile)	30 000km (20 000 mile)	36 000km (24 000 mile)	
Spark plug – clean and gap†			●	●	●	●	●	●	
Air suction valve – check †			●	●	●	●	●	●	
Air cleaner element – clean † #				●		●		●	
Throttle grip play – check†		●		●		●		●	
Idle speed – adjust		●		●		●		●	
Carburetor synchronization – check†				●		●		●	
Engine oil – change #	6 months	●	●	●	●	●	●	●	
Oil filter – replace		●		●		●		●	
Oil screen – clean		●		●		●		●	
Radiator hoses, connections – check†		●							
Coolant – change	2 years					●			
Final gear case oil level – check†				●		●		●	
Final gear case oil – change		●						●	
Propeller shaft joint – lubricate				●				●	
Clutch slave cylinder piston seal – replace	4 years								
Brake lining or pad wear – check† #			●	●	●	●	●	●	
Brake/clutch fluid level – check†	month	●	●	●	●	●	●	●	
Brake/clutch fluid – change	2 years					●			
Brake/clutch master cylinder cup and dust seal – replace	4 years								
Caliper piston seal and dust seal – replace	4 years								
Brake light switch – check†		●	●	●	●	●	●	●	
Steering – check†		●	●	●	●	●	●	●	
Steering stem bearing – lubricate	2 years					●			
Front fork oil – change	2 years					●			
Rear shock absorber oil leak – check †				●		●		●	
Front fork oil leak – check†				●		●		●	
Tire wear – check†			●	●	●	●	●	●	
Spoke tightness and rim runout – check† (VN1500B)		●	●	●	●	●	●	●	
Swingarm pivot – lubricate				●				●	
Battery electrolyte level – check†	6 month		●	●	●	●	●	●	
General lubrication – perform				●		●		●	
Nut, bolt, and fastener tightness – check†		●		●		●		●	

\# : Service more frequently when operating in severe conditions; dusty, wet, muddy, high speed, or frequent starting/stopping.

* : For higher odometer readings, repeat at the frequency interval established here.

† : Replace, add, adjust, clean, or torque if necessary.

http://manuals.magnamaniac.com

Periodic Maintenance Chart (Us and Canada)

The scheduled maintenance must be done in accordance with this chart to keep the motorcycle in good running condition. **The initial maintenance is vitally important and must not be neglected.**

OPERATION \ FREQUENCY	Whichever comes first ➡ Every ⬇	*ODOMETER READING 800 km	5 000 km	10 000 km	15 000 km	20 000 km	25 000 km	30 000 km	
Carburetor synchronization – check †		●	●	●	●	●	●	●	
Idle speed -- adjust		●	●	●	●	●	●	●	
Throttle grip play -- check †		●		●		●		●	
Spark plug -- clean and gap †			●	●	●	●	●	●	
Air suction valve – check †			●	●	●	●	●	●	
Air cleaner element -- clean		●		●		●		●	
Air cleaner element -- replace	5 cleanings					●			
Fuel system -- check †				●		●		●	
Evaporative emission control system (CA) – check †		●	●	●	●	●	●	●	
Battery electrolyte level -- check †	month	●	●	●	●	●	●	●	
Brake light switch -- check †		●	●	●	●	●	●	●	
Brake pad wear – check †			●	●	●	●	●	●	
Brake/clutch fluid level -- check †	month	●	●	●	●	●	●	●	
Brake/clutch fluid -- change	2 years					●			
Steering – check †		●	●	●	●	●	●	●	
Final gear case oil level -- check †				●		●		●	
Final gear case oil – change		●						●	
Propeller shaft joint -- lubricate				●				●	
Nut, bolt, fastener tightness – check †		●		●		●		●	
Spoke tightness and rim runout -- check † (VN1500-B only)		●	●	●	●	●	●	●	
Tire wear -- check †			●	●	●	●	●	●	
Engine oil -- change	year	●		●		●		●	
Oil filter – replace		●		●		●		●	
Oil screen -- clean		●		●		●		●	
General lubrication -- perform			●	●	●	●	●	●	
Front fork oil -- change								●	
Swingarm pivot -- lubricate				●				●	
Coolant -- change	2 years							●	
Radiator hoses, connections -- check †	year	●		●		●		●	
Steering stem bearing – lubricate	2 years					●			
Brake/clutch master cylinder cup and dust seal -- replace	2 years								
Caliper piston seal and dust seal -- replace	2 years								
Clutch slave cylinder piston seal -- replace	2 years								
Brake/clutch hose and pipe – replace	4 years								
Fuel hose -- replace	4 years								

http://manuals.magnamaniac.com

* : For higher odometer readings, repeat at the frequency interval established here.

† : Replace, add, adjust, clean, or torque if necessary.

(CA): California vehicle only

Torque and Locking Agent

The following tables list the tightening torque for the major fasteners, and the parts requiring use of a non-permanent locking agent or liquid gasket.
Letters used in the "Remarks" column mean:
L : Apply a non-permanent locking agent to the threads.
SS : Apply silicone sealant to the threads.
M : Apply molybdenum disulfide lubricant (grease or oil) to the threads and seated surface, or washer.
O : Apply oil to the threads, seated surface, or washer.
S : Tighten the fasteners following the specified torque.
St : Stake the fastener to prevent loosening.

Fastener	Torque			Remarks
	N-m	kg-m	ft-lb	
Cooling System:				
Cooling Fan Switch	7.8	0.80	69 in-lb	
Bleed Valve	7.8	0.80	69 in-lb	
Water Pump Impeller Bolt	8.8	0.90	78 in-lb	Left-handed Threads
Water Pump Cover	9.8	1.0	87 in-lb	
Engine Top End:				
Rocker Case Cover Bolts	8.8	0.90	78 in-lb	
Rocker Shaft	25	2.5	18.0	
Rocker Case Bolts and Nuts : 12 mm	78	8.0	58	S
8 mm	25	2.5	18.0	S
6 mm	8.8	0.90	78 in-lb	S
Cylinder Head Nuts	25	2.5	18.0	
Cylinder Nut	25	2.5	18.0	
Oil Pipe Banjo Bolts	12	1.2	104 in-lb	
Camshaft Sprocket Bolts	15	1.5	11.0	L
Spark Plug Retainer	12	1.2	104 in-lb	
Chain Tensioner Bolts	—	—	—	L
Clutch:				
Clutch Lever Pivot Nut	5.9	0.60	52 in-lb	
Master Cylinder Clamp Bolts	8.8	0.90	78 in-lb	
Clutch Hose Banjo Bolts	25	2.5	18.0	
Clutch Slave Cylinder Bolts	8.8	0.90	78 in-lb	L
Bleed Valve	7.8	0.80	69 in-lb	
RH Engine Cover Damper Bolts	9.8	1.0	87 in-lb	L
Clutch Hub Nut	145	15.0	110	O
Clutch Pipe Joint	18	1.8	13.0	
Engine Lubrication System:				
Crankcase Oil Nozzle	2.9	0.30	26 in-lb	
Oil Pressure Relief Valve	20	2.0	14.5	L
Oil Pressure Switch	15	1.5	11.0	SS
Engine Drain Plug	20	2.0	14.5	
Oil Filter	18	1.8	13.0	
Oil Screen Plug	20	2.0	14.5	
Oil Pipe Banjo Bolts	12	1.2	104 in-lb	

http://manuals.mognamaniac.com

Fastener	Torque			Removark
	N-m	kg-m	ft-lb	
Engine Removal/Installation:				
Engine Mounting Bolts	44	4.5	33	
Engine Mounting Bracket Bolts	24	2.4	17.5	
Right Down Tube Mounting Bolts	44	4.5	33	
Crankshaft/Transmission:				
Crankcase Bolts: 10 mm	39	4.0	29	S
8 mm	21	2.1	15.0	S
6 mm	8.8	0.90	78 in-lb	
External Shift Mechanism Return Spring Bolt	21	2.1	15.0	L
Gear Positioning Lever Bolt	8.8	0.90	78 in-lb	
Connecting Rod Big End Cap Nuts	59	6.0	43	
Primary Gear Bolt	145	15.0	110	
Alternator Rotor Bolt	59	6.0	43	
Camshaft Chain Guide Holder Bolts	–	–	–	L
Starter Clutch Bolt	93	9.5	69	
Starter Clutch Coupling Bolt	15	1.5	11.0	L
Balancer Gear Bolt	93	9.5	69	
Shift Drum Bearing Holder Screw	–	–	–	L
Neutral Switch	15	1.5	11.0	
Rear-right Stud Tap End	–	–	–	L
Wheels/Tires:				
Front Axle Nut	88	9.0	65	
Front Axle Clamp Bolt	29	3.0	22	
Rear Axle Nut	110	11.0	80	
Air Valve Nuts	1.5	0.15	13 in-lb	
Final Drive:				
Front Bevel Gear Case Bolts:				
6 mm	8.8	0.90	78 in-lb	
8 mm	25	2.5	18.0	
Damper Cam Nut	225	23	165	O
Drive Gear Nut	265	27	195	
Neutral Switch	15	1.5	11.0	L
Oil Pipe Banjo Bolts	12	1.2	104 in-lb	
Driven Gear Assembly Mounting Bolts	25	2.5	18.0	
Driven Gear Bolt	120	12.1	88	
Final Gear Case Mounting Nuts	29	3.0	22	
Pinion Gear Nut	120	12.0	87	St
Final Gear Case Cover Bolts:				
8 mm	23	2.3	16.5	L
10 mm	34	3.5	25	L
Final Gear Case Studs	–	–	–	L
Drain Bolt	8.8	0.90	78 in-lb	
Pinion Bearing Retainer	245	25	180	Left-handed Threads
Retainer Stop Screw	16	1.6	11.5	L

http://manuals.magnamaniac.com

Fastener	Torque			Remarks
	N-m	kg-m	ft-m	
Brakes :				
Brake Lever Pivot Nut	5. 9	0. 60	52 in-lb	
Front Master Cylinder Clamp Bolts	8. 8	0. 90	78 in-lb	
Brake Hose Banjo Bolts	25	2. 5	18. 0	
Caliper Mounting Bolts	32	3. 3	24	
Bleed Valves	7. 8	0. 80	69 in-lb	
Disc Mounting Bolts	27	2. 8	20	
Rear Master Cylinder Mounting Bolts	23	2. 3	16. 5	
Caliper Holder Bolt	64	6. 5	47	
Brake Pedal Link Clamp Bolts	25	2. 5	18. 0	
Suspension :				
Front Fork Clamp Bolts: Upper	20	2. 0	14. 5	
Lower	52	5. 3	38	
Front Fork Drain Bolts	—	—	—	L
Front Fork Bottom Allen Bolts	20	2. 0	14. 5	L
Swing Arm Pivot Shaft	98	10. 0	72	
Front Axle Clamp Bolt	29	3. 0	22	
Rear Shock Absorber Mounting Nuts	30	3. 1	22	
Steering :				
Handlebar Clamp Bolts	59	6. 0	43	
Weight Mounting Screws	—	—	—	L
Steering Stem Head Bolt	39	4. 0	29	
Steering Stem Locknut	5	0. 50	43 in-lb	
Frame :				
Right Down Tube Mounting Bolts	44	4. 5	33	
Engine Mounting Bracket Bolts	24	2. 4	17. 5	
Brake Pedal Link Clamp Bolts	25	2. 5	18. 0	
Electrical System :				
Alternator Rotor Bolts	59	6. 0	43	
Spark Plugs	18	1. 75	12. 5	
Cooling Fan Switch	7. 8	0. 80	69 in-lb	
Neutral Switch	15	1. 5	11. 0	
Oil Pressure Switch	15	1. 5	11. 0	

http://manuals.magnamaniac.com

The table below, relating tightening torque to thread diameter, lists the basic torque for the bolts and nuts. Use this table for only the bolts and nuts which do not require a specific torque value. All of the values are for use with dry solvent-cleaned threads.

General Fasteners

Threads dia. (mm)	Torque		
	N-m	kg-m	ft-lb
5	3.4 – 4.9	0.35 – 0.50	30 – 43 in-lb
6	5.9 – 7.8	0.60 – 0.80	52 – 69 in-lb
8	14 – 19	1.4 – 1.9	10.0 – 13.5
10	25 – 34	2.6 – 3.5	19.0 – 25
12	44 – 61	4.5 – 6.2	33 – 45
14	73 – 98	7.4 – 10.0	54 – 72
16	115 – 155	11.5 – 16.0	83 – 115
18	165 – 225	17.0 – 23	125 – 165
20	225 – 325	23 – 33	165 – 240

http://manuals.magnamaniac.com

Cable, Wire, and Hose Routing

Wiring Routing

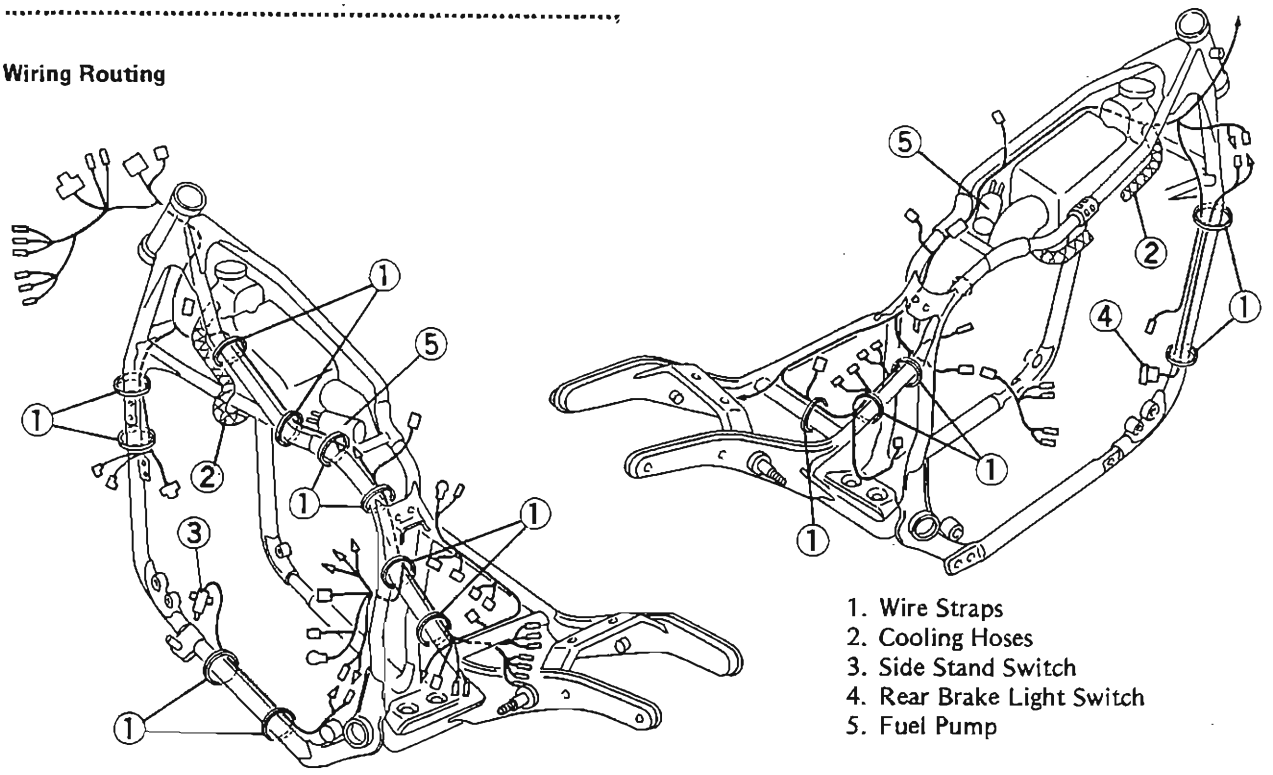

1. Wire Straps
2. Cooling Hoses
3. Side Stand Switch
4. Rear Brake Light Switch
5. Fuel Pump

(VN1500-B)

(VN1500-A)

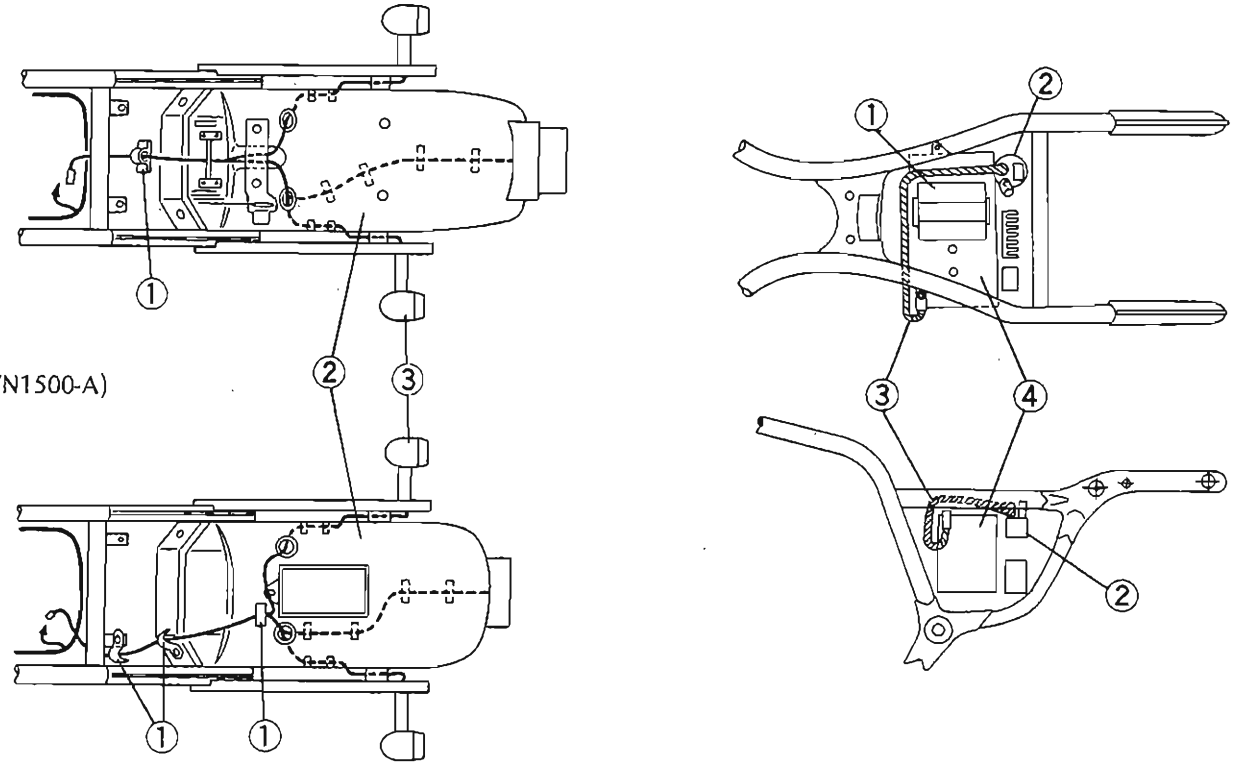

1. Wire Clamps
2. Rear Fender Rear Section
3. Rear Turn Signal Light

1. Junction Box
2. Starter Relay
3. Battery (+) Wire
4. Battery

http://manuals.magnamaniac.com

Cable, Hose and Wire Routing

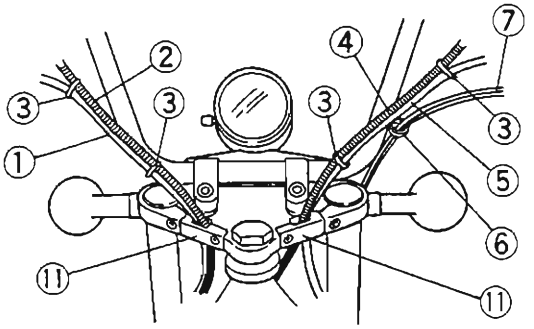

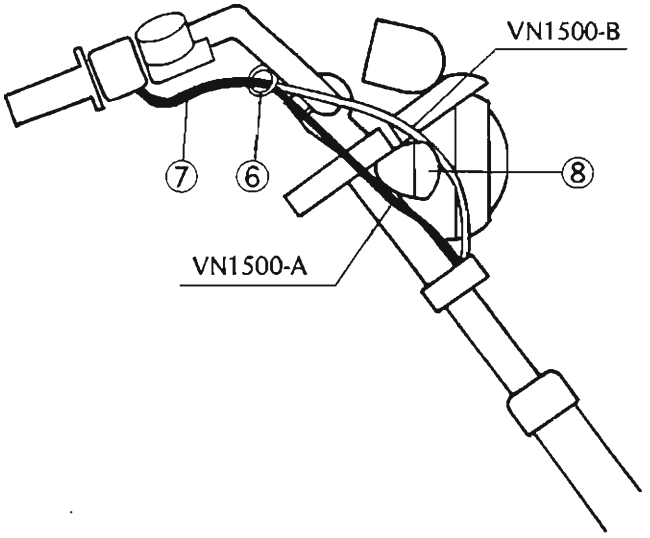

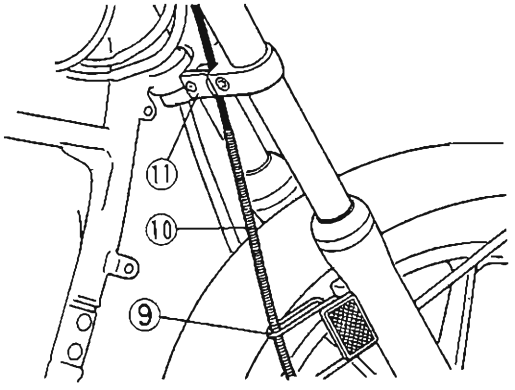

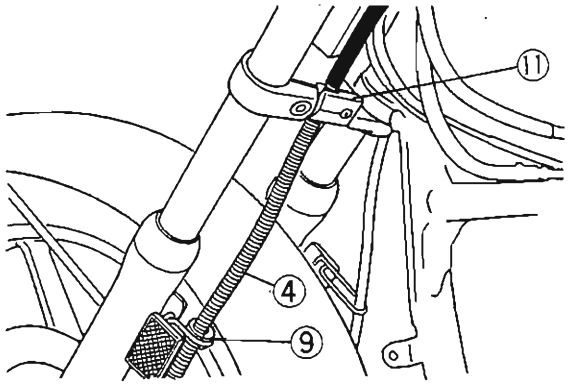

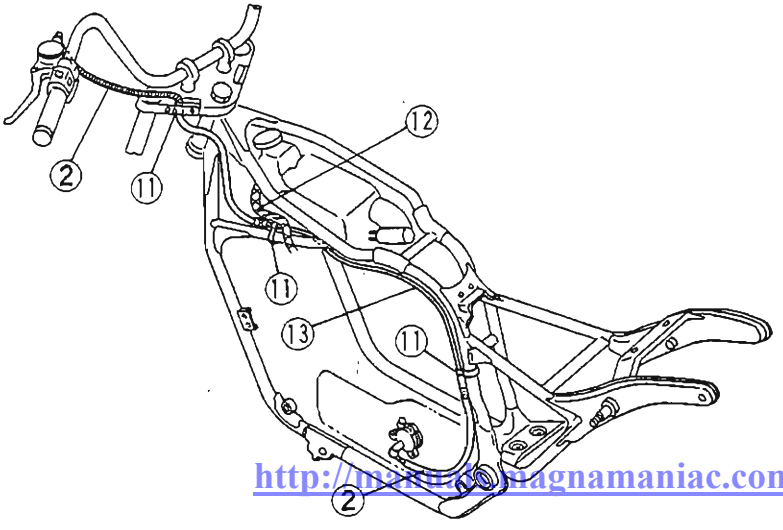

http://manuals.magnamaniac.com

1. Left Switch Housing Wire
2. Clutch Hose
3. Wire Straps
4. Brake Hose
5. Right Switch Housing Wire
6. Cable Guide
7. Throttle Cables
8. Turn Signal Light or Headlight Stay
9. Cable or Hose Guide
10. Speedometer Cable
11. Clamps
12. Cooling Hose
13. Clutch Pipe

Carburetor Hose Routing

(Canadian Model)

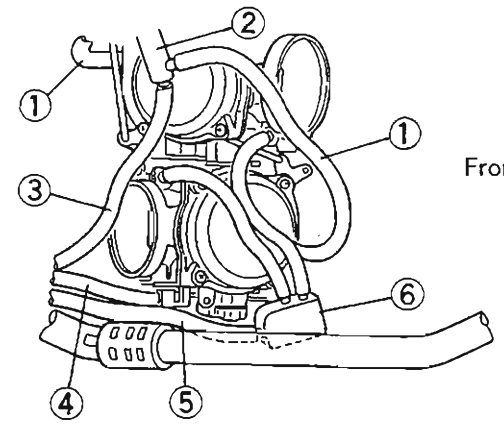

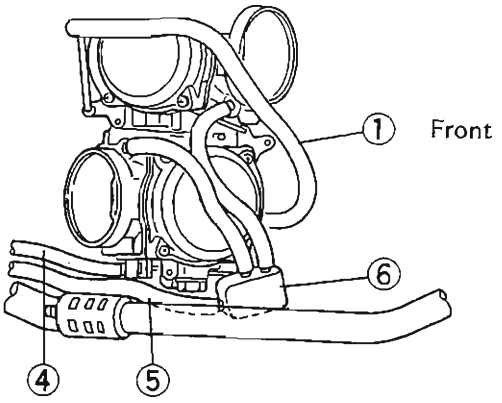

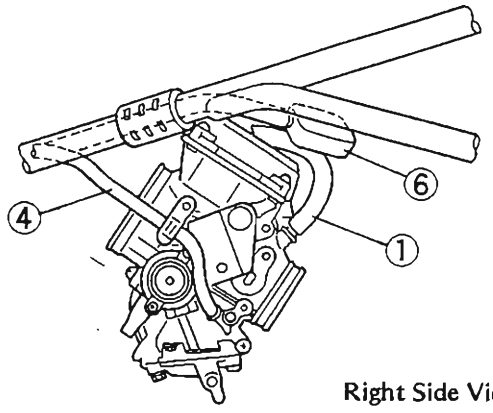

Right Side View

1. Vacuum Hose
2. Vacuum Hose Fitting
3. Vacuum Hose (To Rear Vacuum Switch Valve)
4. Vacuum Hose (To IC Igniter)
5. Air Breather Hose
6. Air Breather Hose Fitting
7. Vacuum Pulse Hose (To Liquid/Vapor Separator)
8. Vacuum Hose (To Front Vacuum Switch Valve)
9. Front Vacuum Switch Valve
10. Choke Knob
11. Air Breather Hose (To Canister)
12. Purge Hose (Between the surge tank and the canister)

(US. California Model)

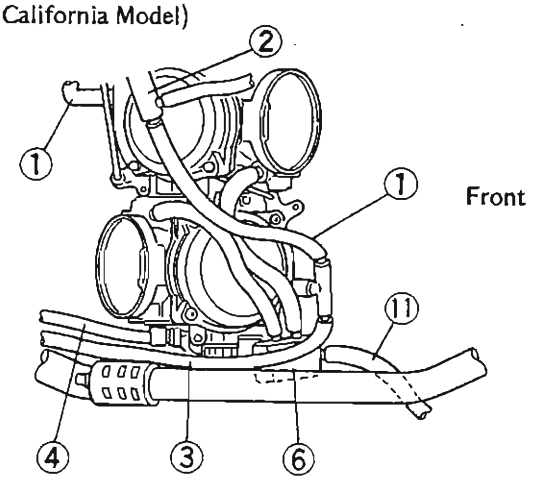

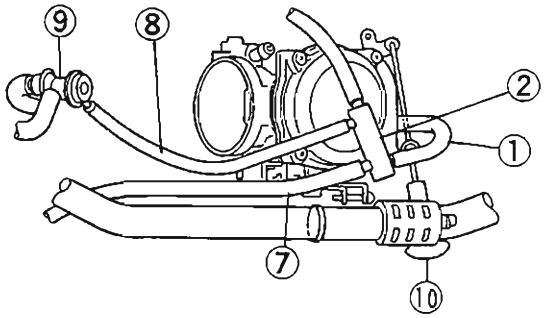

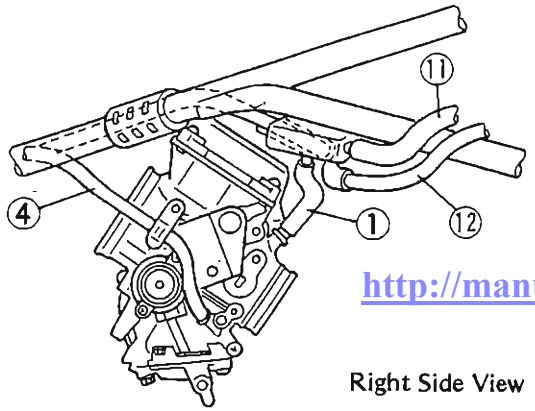

Right Side View

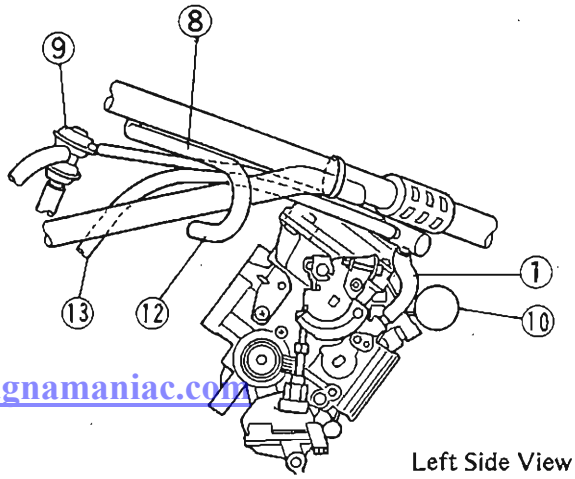

Left Side View

http://manuals.magnamaniac.com

Hose Routing

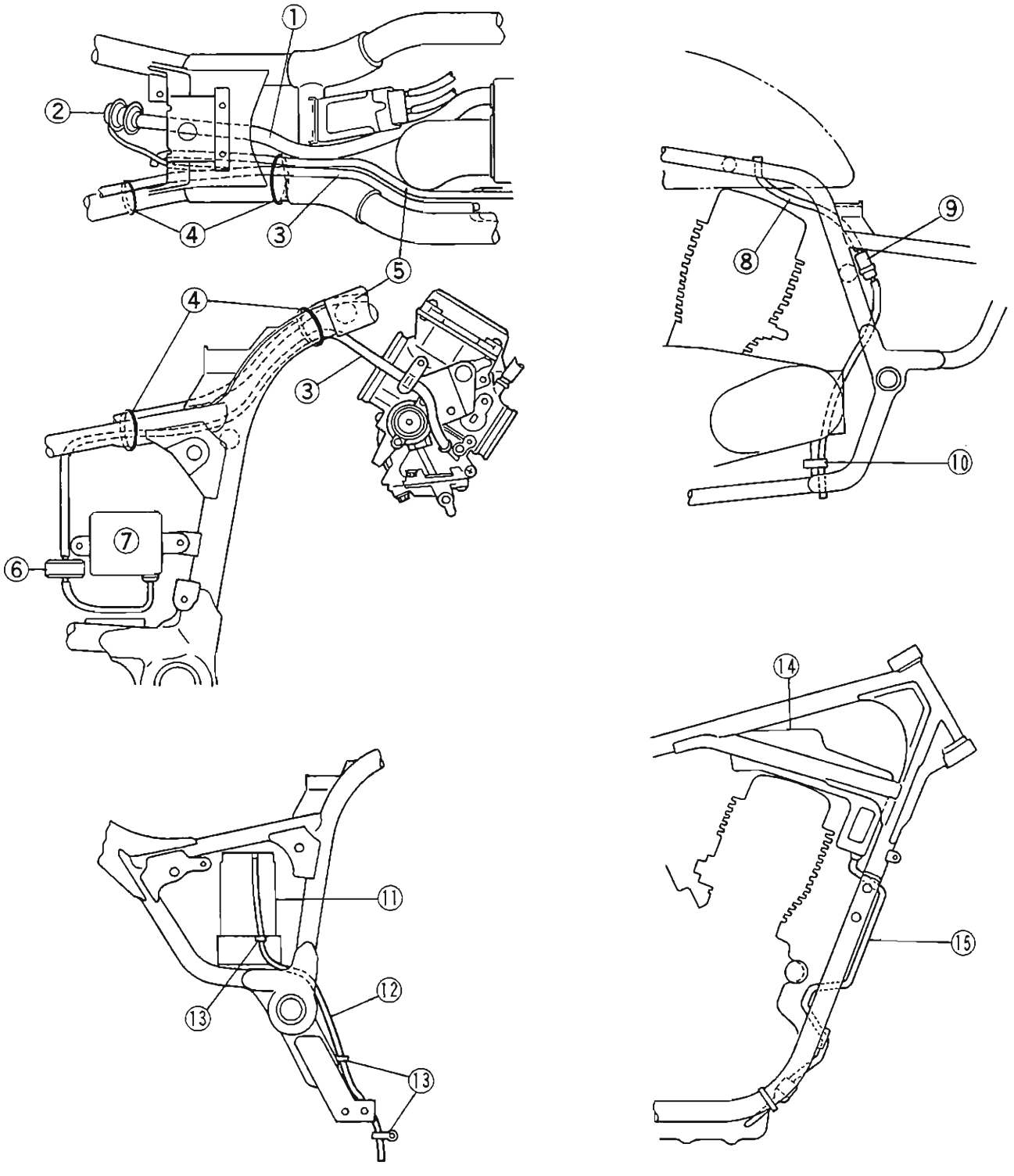

1. Clean Air Hose
2. Rear Vacuum Switch Valve
3. Vacuum Hose
4. Hose Straps
5. Air Breather Hose
6. Air Filter
7. IC Igniter
8. Breather
9. Check Valve (VN1500-A)
10. Hose Guide
11. Battery
12. Battery Vent Hose
13. Hose Guides
14. Surge Tank
15. Drain Hose

http://manuals.magnamaniac.com

Evaporative Emission Control System Hose Routing

(VN1500-A)

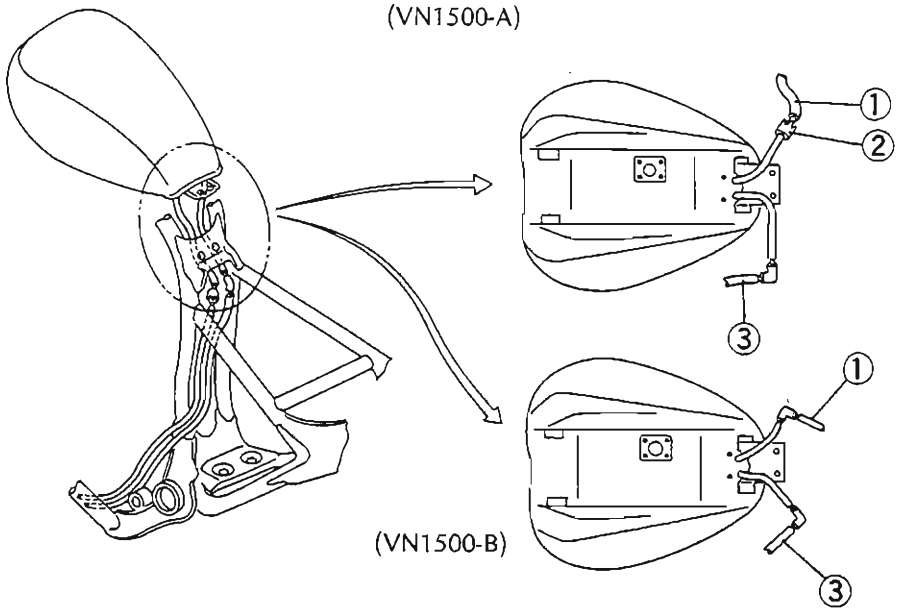

(VN1500-B)

1. Breather Hose
2. Check Valve
3. Return Hose (Red)

1. Front Vacuum Switch Valve
2. Wire or Hose Straps
3. Liquid/Vapor Separator
4. Battery
5. Ignition Coil (Front)
6. Ignition Coil (Rear)
7. Return Hose
8. Breather Hose
9. Starter Motor Wire

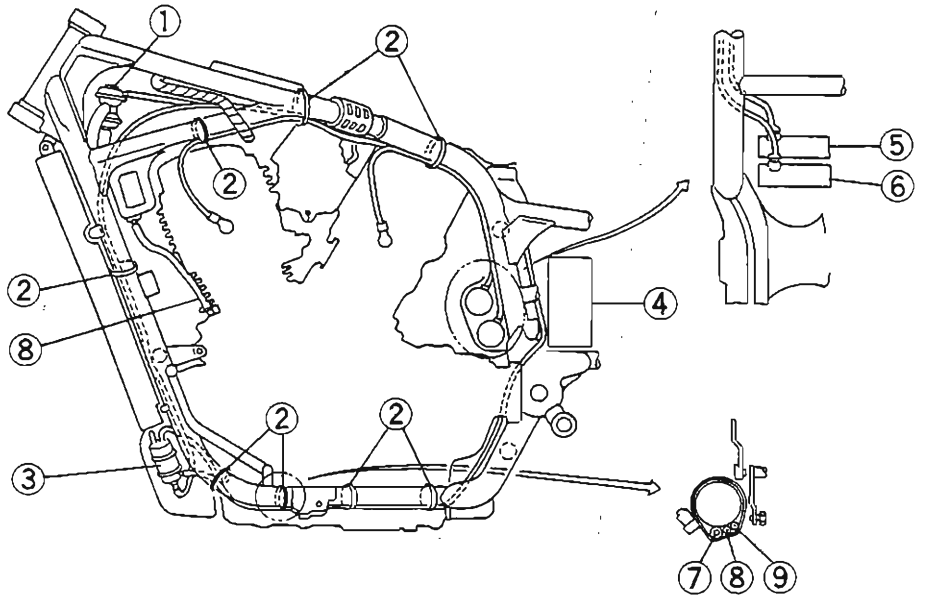

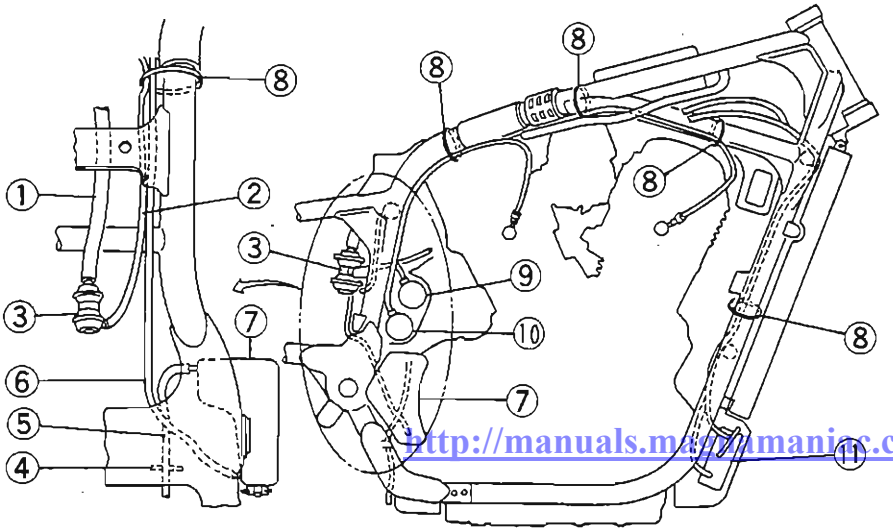

http://manuals.motormaniac.com

1. Clean Air Hose
2. Vacuum Hose
3. Rear Vacuum Switch Valve
4. Hose Guide
5. Vent Tube
6. Reservoir Tank Tube
7. Reservoir Tank
8. Wire or Hose Straps
9. Ignition Coil (Front)
10. Ignition Coil (Rear)
11. Canister

Evaporative Emission Control System Hose Routing

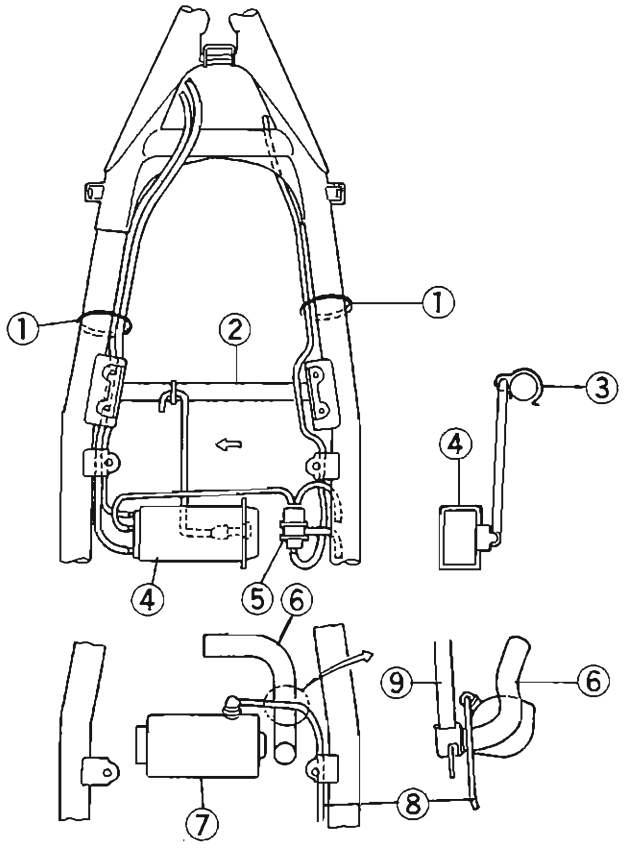

1. Hose Steps
2. Engine Bracket
3. Hose Clamp
4. Canister
5. Liquid/Vapor Separator
6. Cooling Hose
7. Starter Motor
8. Starter Motor Wire
9. Radiator

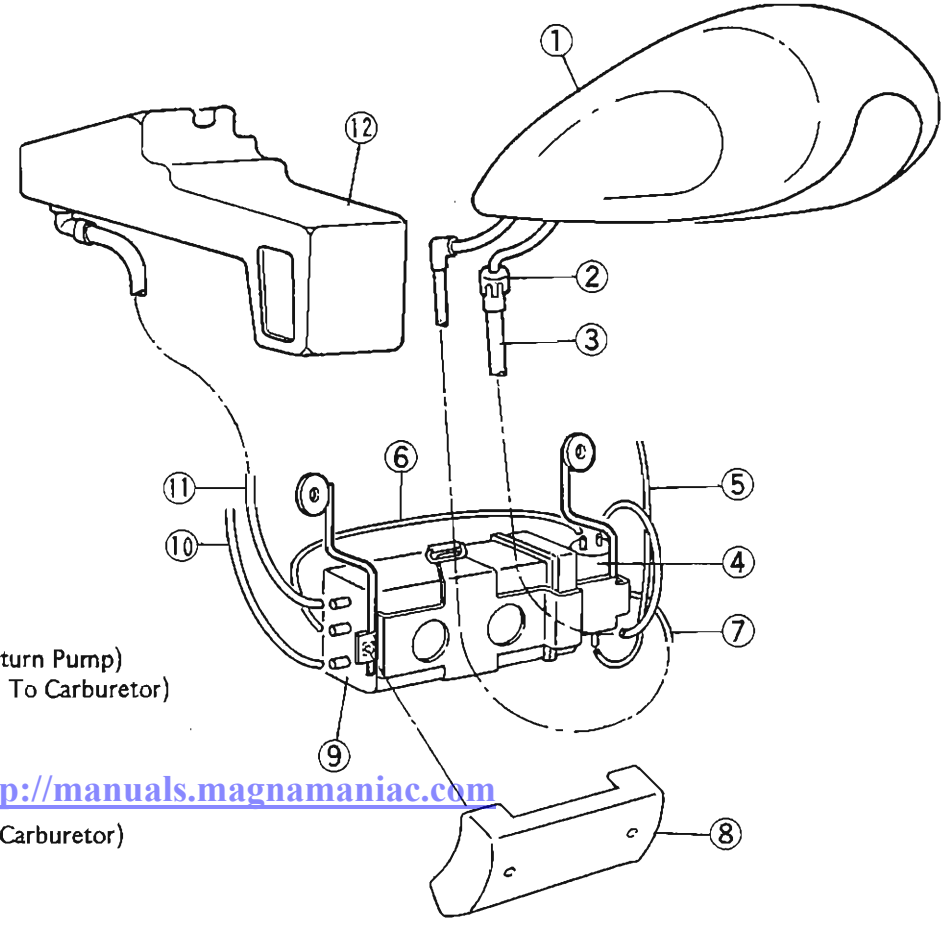

1. Fuel Tank
2. Check Valve (VN1500-A)
3. Breather Hose (Blue)
4. Liquid/Vapor Separator (Return Pump)
5. Vacuum Pulse Hose (White: To Carburetor)
6. Breather Hose (Blue)
7. Return Hose (Red)
8. Cover
9. Canister
10. Breather Hose (Yellow: To Carburetor)
11. Purge Hose (Green)
12. Surge Tank

http://manuals.magnamaniac.com

Engine Top End Hose Routing

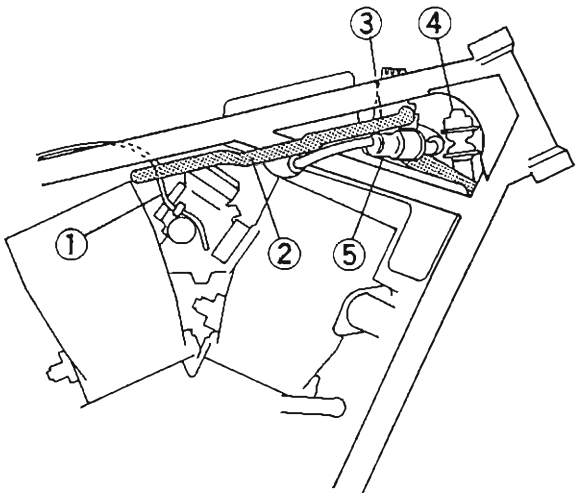

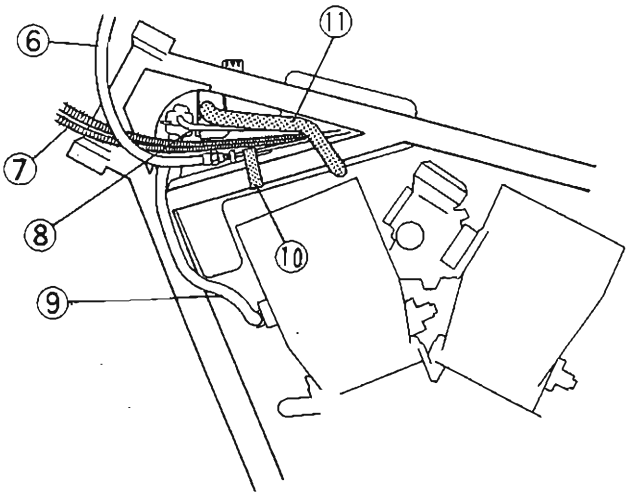

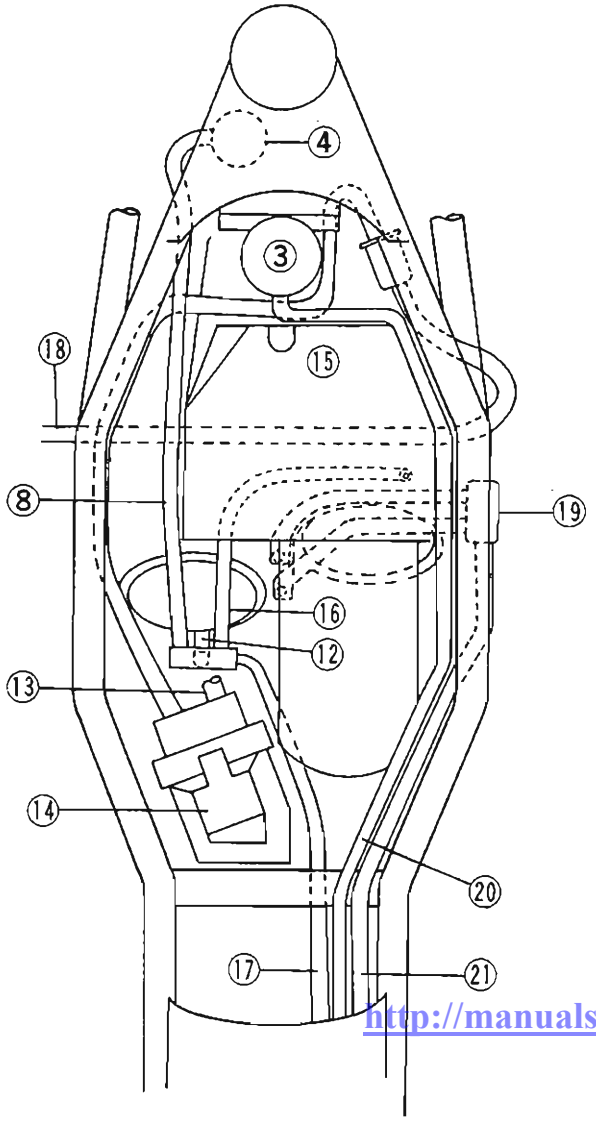

1. Vacuum Hose (IC Igniter)
2. Cooling Hose
3. Thermostat Housing
4. Front Vacuum Switch Valve
5. Fuel Filter
6. Clutch Hose
7. Throttle Cables
8. Vacuum Hose (To Front Vacuum Switch Valve)
9. Clean Air Hose
10. Clutch Hose Strap
11. Cooling Hose
12. Vacuum Hose (Front Carburetor)
13. Fuel Hose (To Carburetor)
14. Fuel Pump
15. Surge Tank
16. Vacuum Hose (Rear Carburetor)
17. Vacuum Hose (To Rear Vacuum Switch Valve)
18. Fuel Hose (To Fuel Pump)
19. Air Breather Hose Fitting
20. Reservoir Tank Tube
21. Air Breather Hose

http://manuals.magnamanac.com

Fuel System

Table of Contents

2

Exploded View 2-2
Specifications 2-5
Special Tools 2-5
Throttle Grip and Cables 2-6
  Throttle Cable Adjustment 2-6
Carburetors 2-7
  Idle Speed Adjustment 2-7
  High Altitude Performance Adjustment (US model) 2-7
  Fuel System Cleanliness Inspection 2-7
  Carburetor Synchronization 2-8
  Service Fuel Level Adjustment 2-8
  Carburetor Removal 2-9
  Carburetor Installation 2-10
  Carburetor Separation 2-11
  Carburetor Combination 2-11
  Carburetor Disassembly 2-12
  Carburetor Assembly 2-12
  Carburetor Inspection 2-14
Fuel Pump 2-14
  Removal 2-14
  Installation Notes 2-15
Fuel Filter 2-15
  Removal 2-15
  Installation Notes 2-15
  Inspection 2-15
Air Cleaner 2-15
  Element (Housing) Removal 2-15
  Element Cleaning 2-16
  Air Cleaner Housing Installation 2-16
  Air Cleaner Duct Installation 2-17
Surge Tank 2-17
  Surge Tank Removal 2-17
Evaporative Emission Control System (US California Vehicle only) 2-17
  Parts Removal/Installation Notes 2-17
  Hose Inspection 2-17
  Separator Inspection 2-17
  Separator Operation Test 2-18
  Canister Inspection 2-18

http://manuals.magnamaniac.com

Exploded View

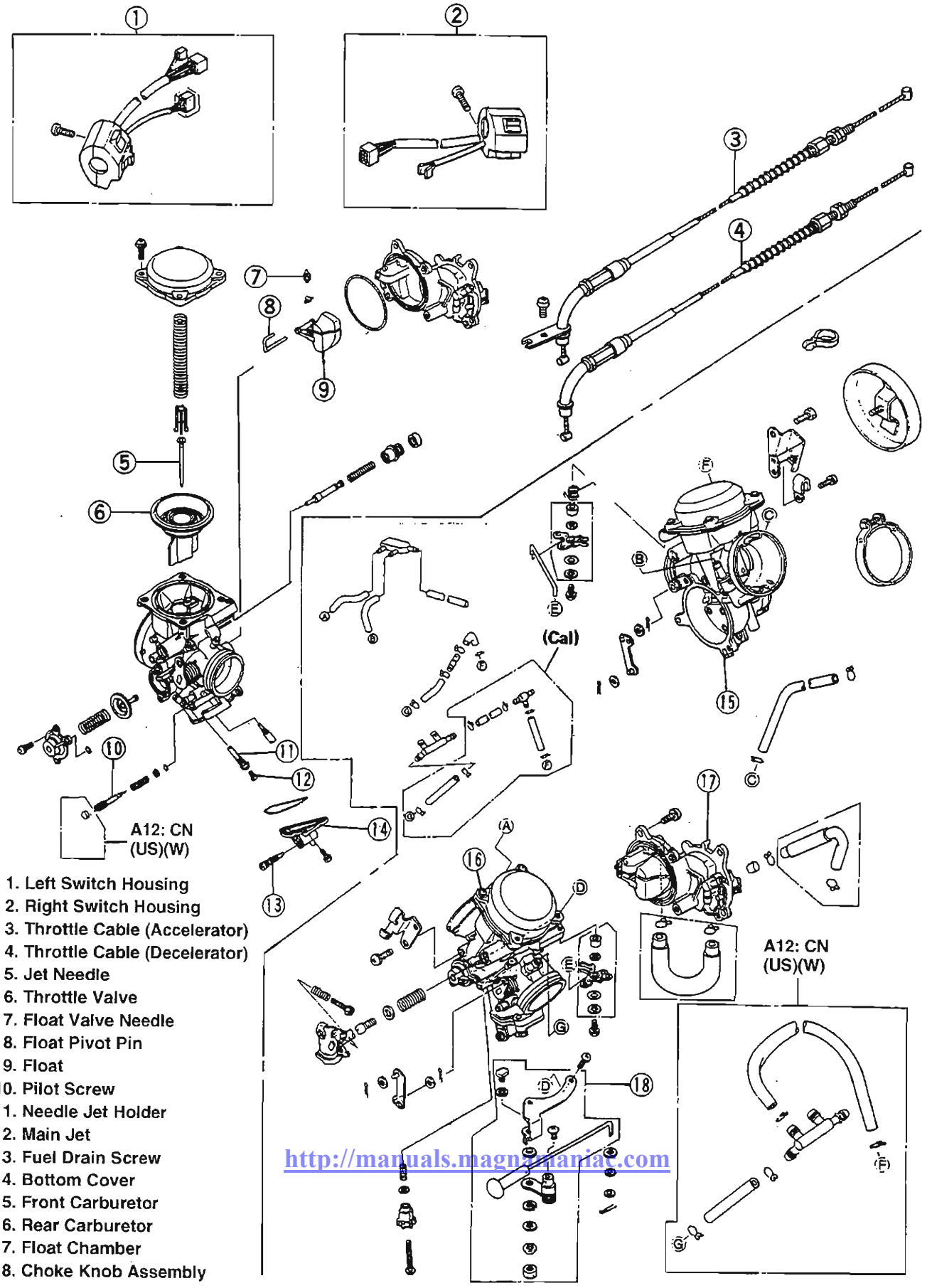

1. Left Switch Housing
2. Right Switch Housing
3. Throttle Cable (Accelerator)
4. Throttle Cable (Decelerator)
5. Jet Needle
6. Throttle Valve
7. Float Valve Needle
8. Float Pivot Pin
9. Float
10. Pilot Screw
11. Needle Jet Holder
12. Main Jet
13. Fuel Drain Screw
14. Bottom Cover
15. Front Carburetor
16. Rear Carburetor
17. Float Chamber
18. Choke Knob Assembly

http://manuals.magnamania.com

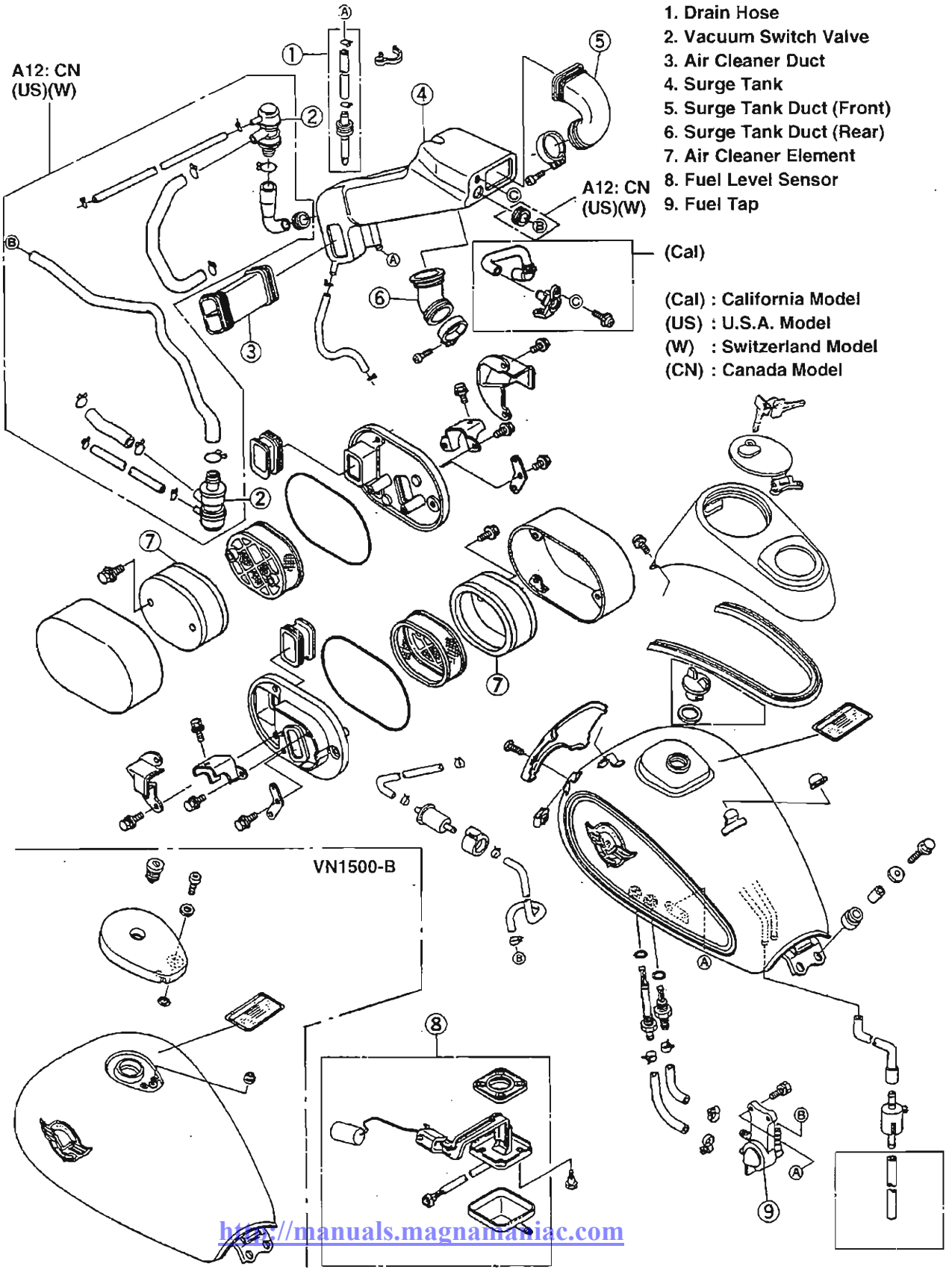

1. Drain Hose
2. Vacuum Switch Valve
3. Air Cleaner Duct
4. Surge Tank
5. Surge Tank Duct (Front)
6. Surge Tank Duct (Rear)
7. Air Cleaner Element
8. Fuel Level Sensor
9. Fuel Tap

(Cal) : California Model
(US) : U.S.A. Model
(W) : Switzerland Model
(CN) : Canada Model

http://manuals.magnamaniac.com

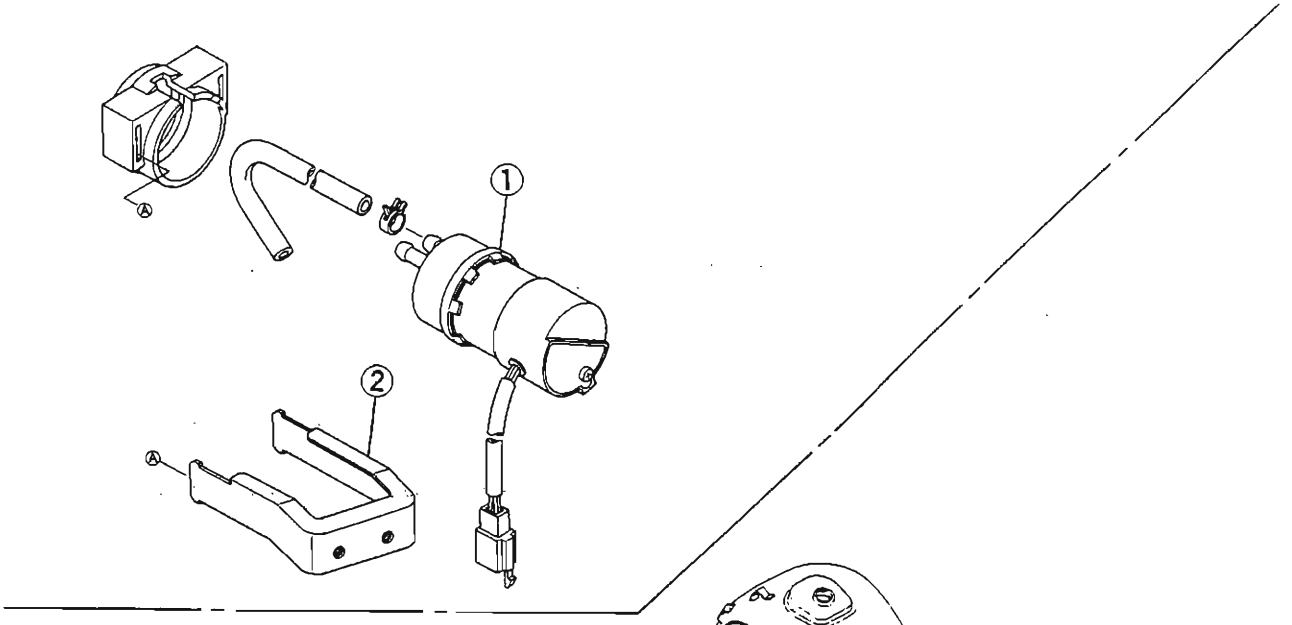

Evaporative Emission Control System
(California Model)

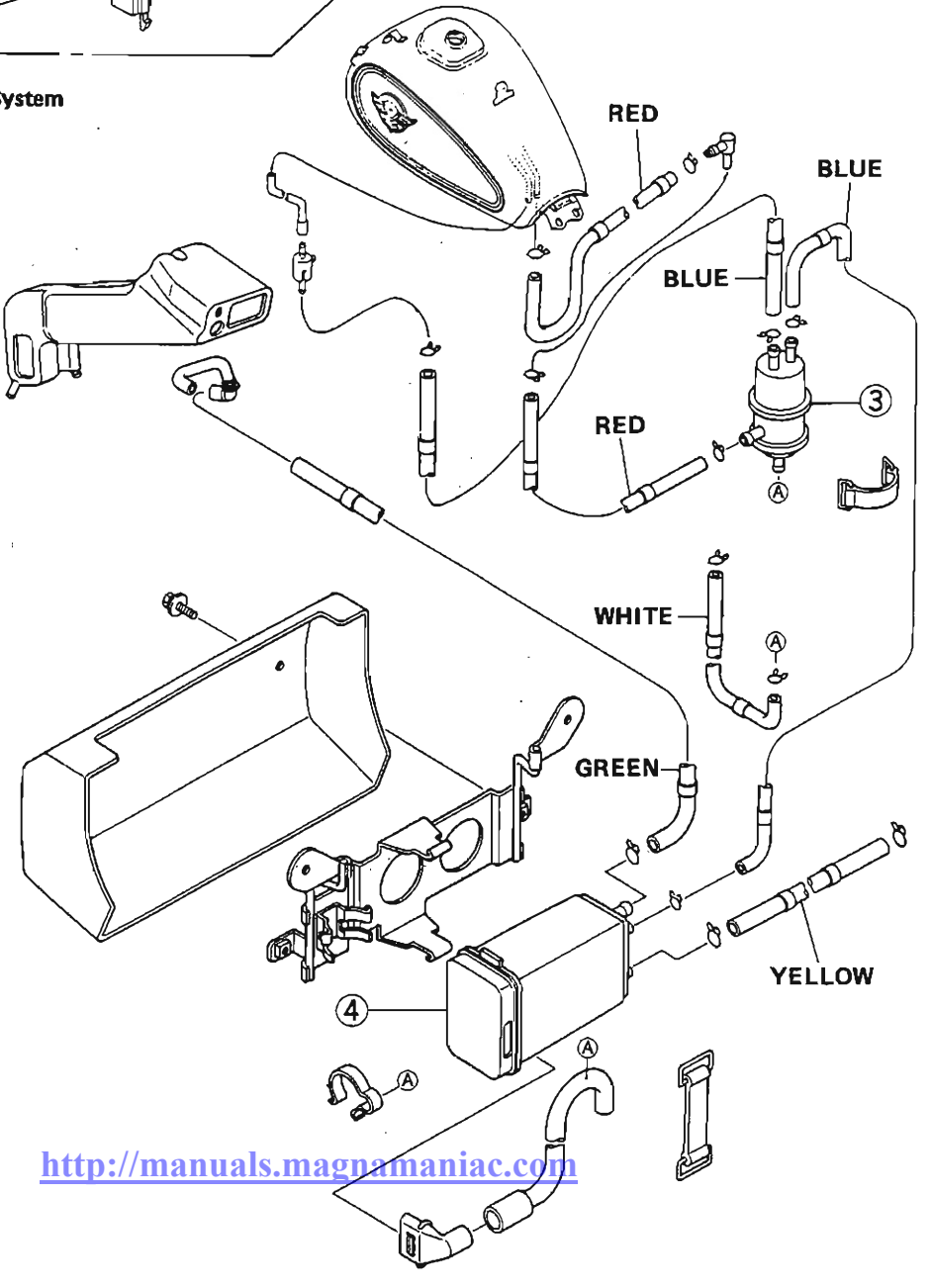

1. Fuel Pump
2. Bracket
3. Liquid/Vapor Separator
4. Canister

http://manuals.magnamaniac.com

Specifications

Item		Standard	
Throttle Grip : Throttle grip free play		2—3 mm	
Carburetors :		VN1500-A	VN1500-B
Make, type		Keihin, CVK36	←
Main jet:	Front	#112,(Cal) #118	#130
	Rear	#112,(US)(C) #115,(Cal) #118	#132
Jet needle:	Front	N53S,(Cal) N53U, (W) N67F	N36P,(Cal)N36R,(W)N77D
	Rear	N67A,(US)(C) N53T, (Cal) N53V, (W) N67G	N36Q,(Cal)N36S,(W)N77D
Pilot screw		1 1/2 turns out, A3~(FG) ,A4~(EU): 2 1/4 turns out,(US)(W)—	←
Service fuel level:	Front	2. 2 ± 1 mm	←
	Rear	4. 2 ± 1 mm	←
Idle speed		750—850 r/min (rpm)	←
			(W) 850—950 r/min (rpm)
Synchronization vacuum		Less than 2.7 kPa (2 cm Hg)	←

(US) : U.S.A. Model
(C) : Canada Model
(Cal) : California Model
(FG) : Germany Model
(Swi) : Switzerland Model
(EU) : Europe Model

Special Tools

Fuel Level Gauge: 57001-1017

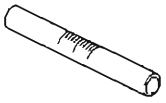

http://manuals.magnamaniac.com

Throttle Grip and Cables

Throttle Cable Adjustment

●Check throttle grip free play.

Throttle Grip Free Play

Standard: 2 – 3 mm

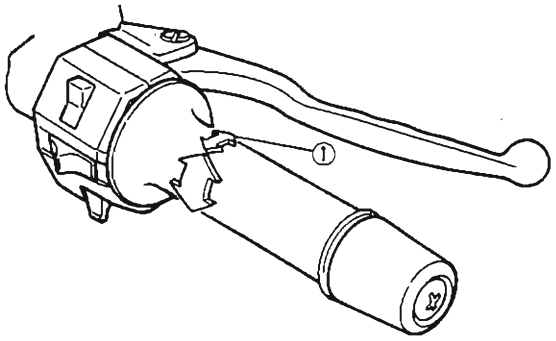

1. Throttle Grip Free Play

★If the free play is incorrect, adjust the throttle cables.

●Loosen the locknuts, and screw both throttle cable adjusters in completely at the upper ends of the throttle cables so as to give the throttle grip plenty of play.

●While holding the throttle grip stop against the stopper inside, turn out the decelerator cable adjuster stopping at the point where the grip just begins to be turned back from the completely stopped position. Tighten the locknut.

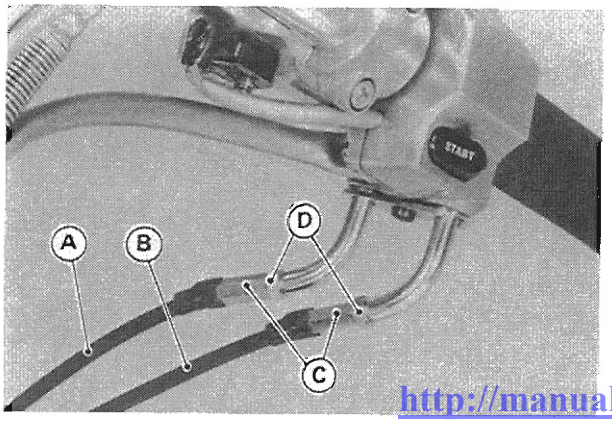

A. Accelerator Cable
B. Decelerator Cable
C. Adjusters
D. Locknuts

●Turn the accelerator cable adjuster until 2 – 3 mm of throttle grip play is obtained. Tighten the locknut.

★If the throttle cables cannot be adjusted by using the cable adjusters at the upper ends of the throttle cables, use the adjusters at the lower ends of the cables.

●Remove the fuel tank mounting bolts and move the tank toward the rear.

●First give the throttle grip plenty of play at the upper ends of the throttle cables as mentioned above. Tighten the locknuts.

●Loosen the locknuts, and screw both throttle cable adjusting nuts in fully at the lower ends of the throttle cables so as to give the throttle grip plenty of play.

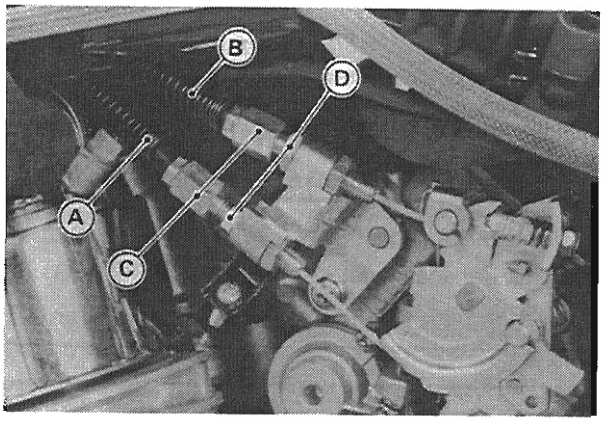

A. Accelerator Cable
B. Decelerator Cable
C. Adjusting Nuts
D. Locknuts

●Turn out the decelerator cable adjusting nut in the same way with the adjuster at the upper end of the decelerator cable making sure that the throttle grip is not turned back at all. Tighten the locknut.

●Turn the accelerator cable adjusting nut until the correct throttle grip free play is obtained.

●Check the following.

○Start the engine.

○Turn the handlebar from side to side while idling the engine.

☆If the speed varies, the throttle cable may be poorly routed or it may be damaged.

○Correct any problem before operating the motorcycle.

http://manuals.magnamaniac.com

WARNING

○**Operation with an improperly adjusted, incorrectly routed, or damaged cable could result in an unsafe riding condition.**

Carburetors

Idle Speed Adjustment

●Start the engine and warm it up thoroughly.
●Turn the handlebar from side to side while idling the engine.
★If idle speed varies, the throttle cables may be poorly routed or they may be damaged.
●Correct any problem before operating the motorcycle.

WARNING

○**Operation with an improperly adjusted, incorrectly routed, or damaged cable could result in an unsafe riding condition.**

●Check idle speed with a tachometer.

Idle Speed

Standard: 750 – 850 r/min (rpm)
Ⓦ 850 – 950 r/min (rpm)

Ⓦ : Swiss Model (VN1500-B)

●Turn the idle adjusting screw until idle speed is correct.

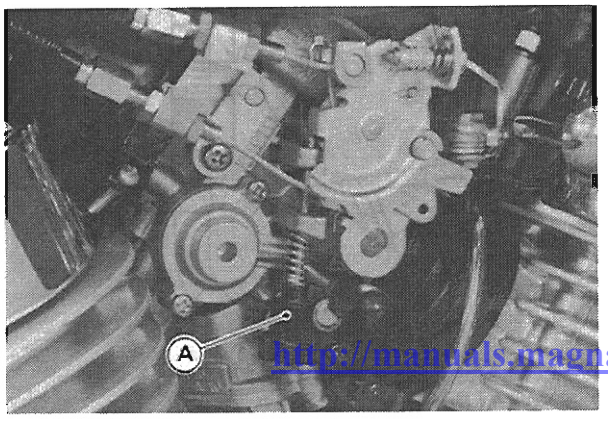

A. Idle Adjusting Screw

High Altitude Performance Adjustment (US model)

○To improve the EMISSION CONTROL PERFORMANCE of vehicles operated above **4000 feet**, Kawasaki recommends the following Environmental Protection Agency (EPA) approved modification.
●Change the main jet and pilot jet for high altitude use.

High Altitude Carburetor Specifications

Main Jet	**VN1500-A**		
	Front	**:**	**#110 (Cal) #115**
	Rear	**:**	**#112 (Cal) #115**
	VN1500-B		
	Front	**:**	**#128**
	Rear	**:**	**#130**
Pilot Jet			**#40**

Fuel System Cleanliness Inspection

WARNING

○**Gasoline is extremely flammable and can be explosive under certain conditions. Turn the ignition switch OFF. Do not smoke. Make sure the area is well ventilated and free from any source of flame or sparks; this includes any appliance with a pilot light.**

●Connect a suitable hose to the fitting at each carburetor bottom cover.
●Run the lower ends of the hoses into a suitable container.
●Turn out each drain plug a few turns and drain the float chambers.

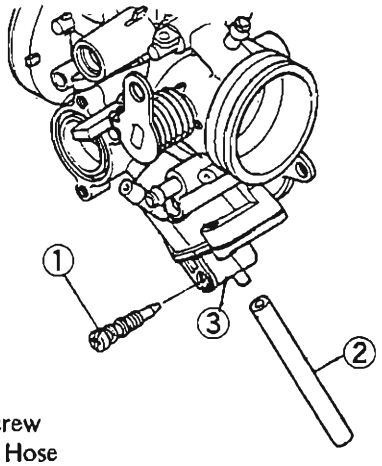

1. Drain Screw
2. Suitable Hose
3. Bottom Cover

http://manuals.magnamaniac.com

●Check to see if water or dirt comes out.
●Tighten the drain plugs.
★If any water or dirt appeared during the above inspection, clean the fuel system.

Carburetor Synchronization

●Warm up the engine.
●Check idle speed and adjust if necessary.
●Attach a commercially available vacuum gauge to the vacuum hose fittings on the carburetors.

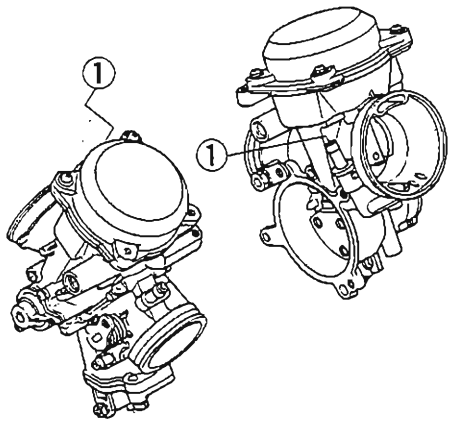

1. Vacuum Hose Fittings

●Start the engine and let it idle to measure the engine intake vacuum.
★If the intake vacuum difference between the cylinders exceeds the limit, synchronize the carburetors.

Carburetor Synchronization Vacuum

Less than 2.7 kPa (2 cmHg) difference between two carburetors

●With the engine idling, turn the adjuster bolt to synchronize the butterfly valves.
○When the adjuster bolt is **turned in**, the rear cylinder vacuum increases. When the bolt is **backed out**, the rear cylinder vacuum decreases.

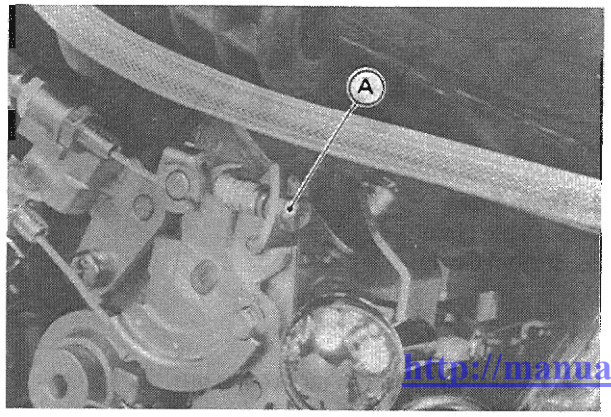

A. Adjuster Bolt

★If proper carburetor synchronization cannot be obtained by using the adjusting bolt, check for dirt or blockage, and then check the pilot screw settings.
●Check the carburetor synchronization again.

NOTE

○*Do not turn the pilot screws carelessly during carburetors synchronization. You may cause poor running at low engine speed.*

●Check idle speed.

Service Fuel Level Adjustment

NOTE

○*Carburetor fuel level cannot be checked with the carburetors removed. If there is any doubt, check the fuel level before removing the carburetors.*

WARNING

○**Gasoline is extremely flammable and can be explosive under certain conditions. Turn the ignition switch OFF. Do not smoke. Make sure the area is well ventilated and free from any source of flame or sparks; this includes any appliance with a pilot light.**

●Secure the motorcycle in a true vertical position.
○When the engine has been removed, set it on a flat surface with the carburetors installed. Put the fuel tank on a bench, and connect the fuel tap to the carburetors using a suitable hose.
●Prepare a fuel hose.
●Connect a fuel level gauge (special tool) to the carburetor bottom cover with the hose.
●Hold the gauge vertically against the side of the carburetor body so that the "zero" line is at the upper edge of the coasting enricher mounting screw.

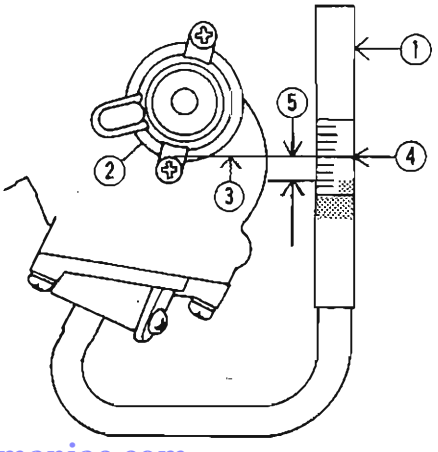

1. Fuel Level Gauge: 57001-1017
2. Coasting Enricher
3. Upper Edge of the Screw
4. "Zero" Line

http://manuals.magnamaniac.com

●Turn the fuel tap to the ON or RES position to feed fuel to the carburetor, then turn out the carburetor drain plug a few turns.
●Read the fuel level in the gauge and compare it to the specification. Screw in the carburetor drain plug.

Service Fuel Level

From the upper edge of the coasting enricher mounting lower screw.

Front	:	**below 1.2 – 3.2 mm**
Rear	:	**below 3.2 – 5.2 mm**

★If the fuel level is incorrect, remove the carburetors and separate them (see Carburetor Separation).
●To adjust the fuel level, bend the tang on the float arm to change the float height.

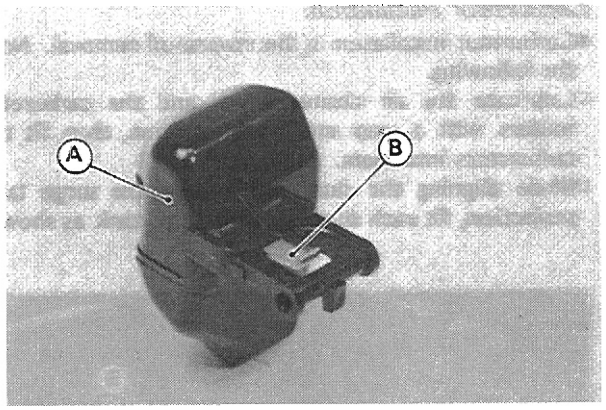

A. Float B. Tang

○Increasing the float height lowers the fuel level and decreasing the float height raises the fuel level.

Fuel Level Adjustment

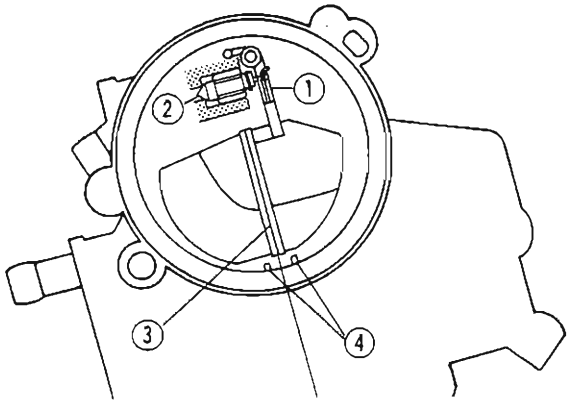

1. Float Tang
2. Float Valve
3. Float Mating Edge
4. Chamber Ribs

NOTE

○*Do not push the needle rod in during the float height measurement.*

Carburetor Removal

WARNING

○**Gasoline is extremely flammable and can be explosive under certain conditions. Turn the ignition switch OFF. Do not smoke. Make sure the area is well ventilated and free from any source of flame or sparks; this includes any appliance with a pilot light.**

●First remove the following.
Seat
Fuel Tank
Drain the fuel from the carburetor.
Loosen the throttle cable adjuster.
●Then remove the following from the left side.
Throttle Cable Holder Screw
Surge Tank Duct Clamp Screw (Loosen)
Carburetor Holder Clamp Screw (Loosen)
Vacuum Hose

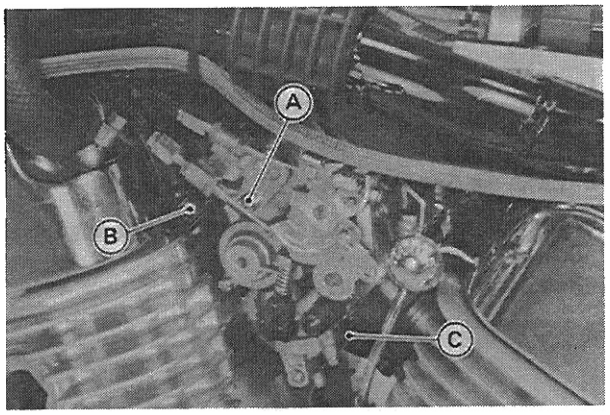

A. Throttle Cable Holder Screw
B. Surge Tank Duct Clamp Screw
C. Carburetor Holder Clamp Screw

●Then remove the following from the right side.
Carburetor Cover
Carburetor Cover Bracket
Surge Tank Duct Clamp Screw (Loosen)
Carburetor Holder Clamp Screw (Loosen)
Vacuum Hose

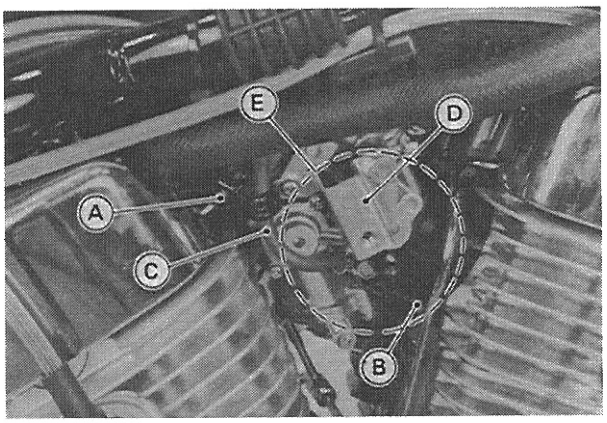

A. Surge Tank Duct Clamp Screw
B. Carburetor Holder Clamp Screw
C. Vacuum Hose
D. Carburetor Cover Bracket
E. Carburetor Cover

http://manuals.magnamac.com

●Then remove the follwoing from the upper end.
Clean Air System Hose
Fuel Pump and Pull the output hose from the carburetor.
Fuel Pump Wire Connector
Surge Tank Duct (Front Carburetor)

WARNING

○**Fuel spilled from the fuel pump is hazardous.**

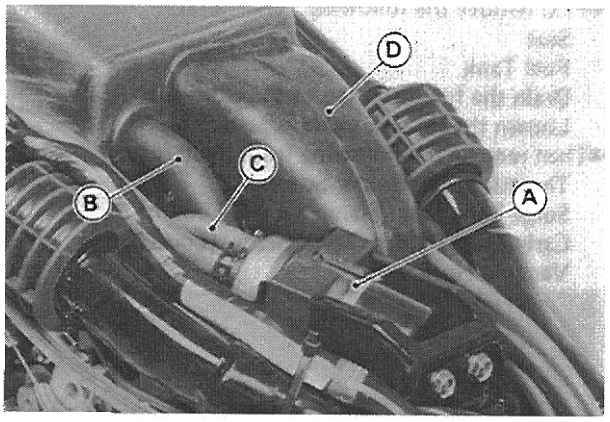

A. Fuel Pump
B. Clean Air System Hose
C. Output Hose
D. Surge Tank Duct

●Push the surge tank with the thermostat hosing toward the front.
●Remove the carburetors as shown.

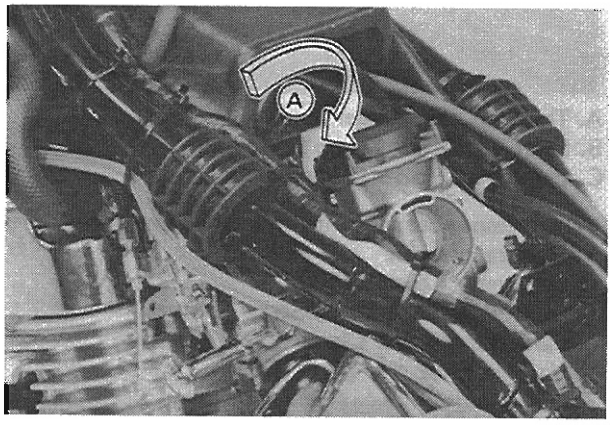

A. Turn the carburetor assembly clockwise.

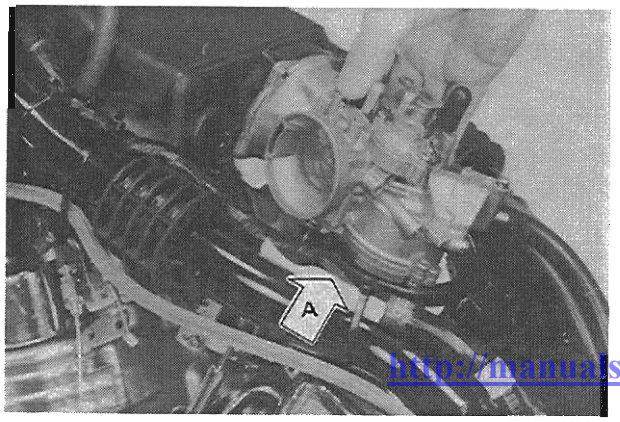

A. Take the carburetor set out from between the cylinder heads.

WARNING

○**If dirt or dust is allowed to pass through into the carburetors, the throttle may become stuck, possibly causing an accident.**

CAUTION

○**If dirt gets through into the engine, excessive engine wear and possibly engine damage will occur.**

Carburetor Installation

●Carburetor installation is the reverse of removal. Note the following.
○Lubricate the air cleaner ducts and the carburetor holders with a soap and water solution, then fit the carburetors into them.
○While aligning the duct notch onto the surge tank projection, fit each duct into the surge tank as shown.

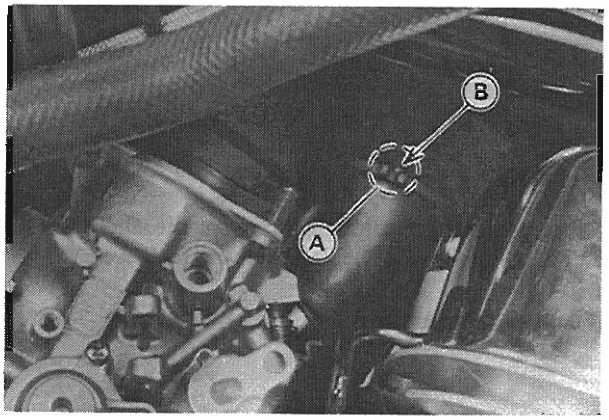

A. Notch
B. Surge Tank Projection

CAUTION

○**Keep the hoses free of obstruction.**

●After installing the carburetors, perform the following.
○Check fuel leakage from the carburetors.

WARNING

○**Fuel spilled from the carburetors is hazardous.**

http://manuals.magnamaniac.com

○Adjust the following items if necessary.
Idle Speed
Carburetor Synchronization
Throttle Cables

Carburetor Separation

●Remove the front carburetor.
○Remove the following parts.
Choke Rod Mounting Plate Screws
Choke Rod

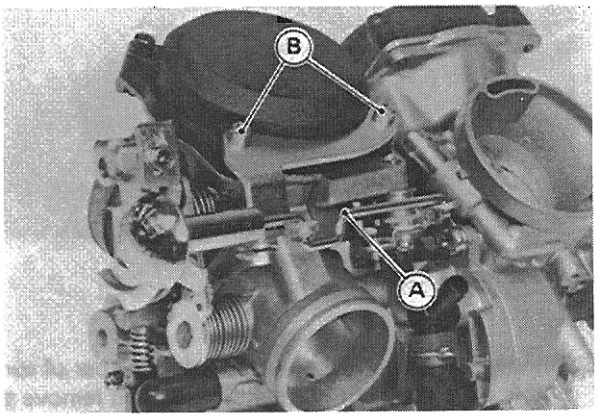

A. Choke Rod B. Screws

Rear Carburetor Choke Rod Pivot Screw
Choke Link Rod

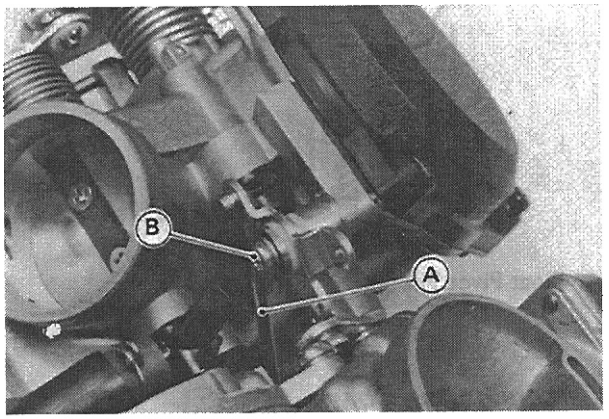

A. Choke Link Rod B. Choke Rod Pivot Screw

Throttle Link Rod Cotter Pin and Plastic Washer

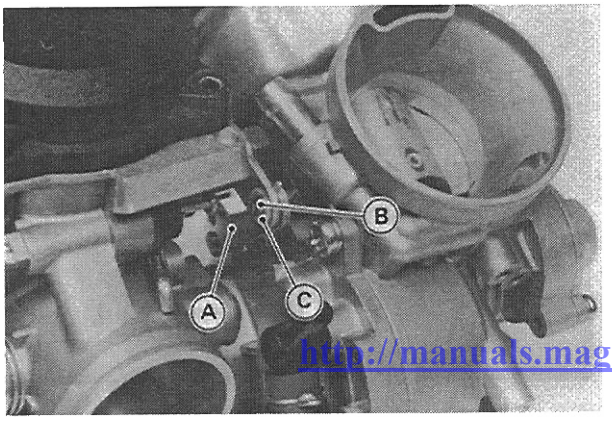

A. Throttle Link Lever C. Plastic Washer
B. Cotter Pin

Front Carburetor Float Chamber Screws (3)

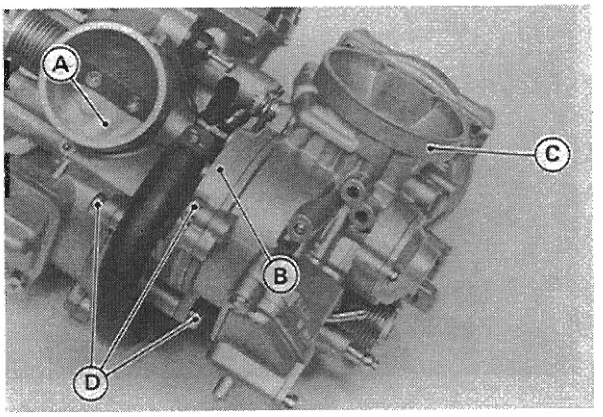

A. Rear Carburetor C. Front Carburetor
B. Float Chamber D. Screws

○Remove the rear carburetor float chamber screws and separate the rear carburetor.

Carburetor Combination

●Installation is reverse of removal. Note the following.
●Fit the front carburetor to the float chamber as shown.

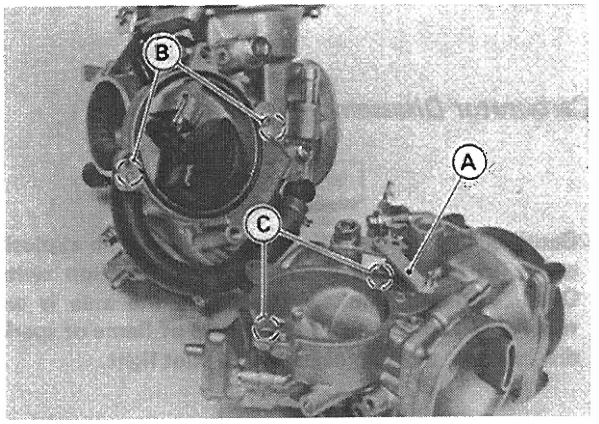

A. Throttle Link Lever C. Notches
B. Projections

http://manuals.magnamaniac.com

○Connect the choke link rods and install the plastic washer and the throttle link lever cotter pin.

○Install the rear carburetor starter plunger lever as shown.

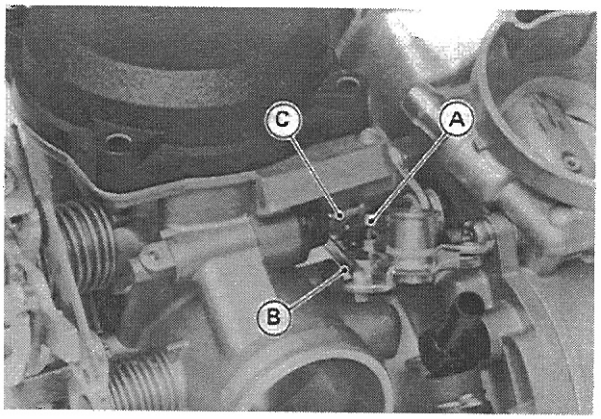

A. Starter Plunger Lever C. Starter Plunger
B. Choke Link Rod

○Install the choke rod to the carburetor.

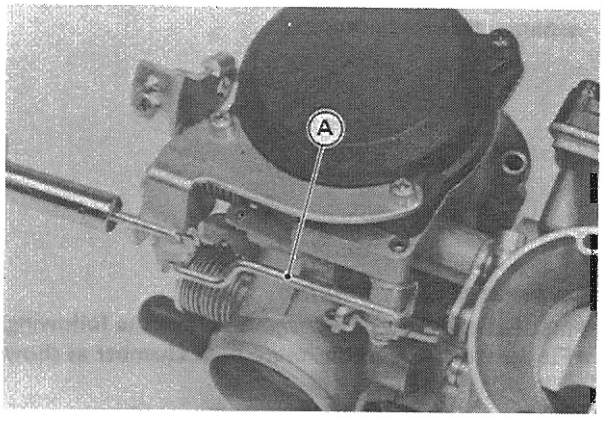

A. Choke Rod

Carburetor Disassembly

WARNING

○**Gasoline is extremely flammable and can be explosive under certain conditions. Turn the ignition switch OFF. Do not smoke. Make sure the area is well ventilated and free from any source of flame or sparks; this includes any appliance with a pilot light.**

CAUTION

○**During carburetor disassembly, be careful not to damage the diaphragm. Never use a sharp edge to remove the diaphragm.**

●Remove the pilot screw plug as follows:
○Punch a hole in the plug and pry it out with an awl or other suitable tool.

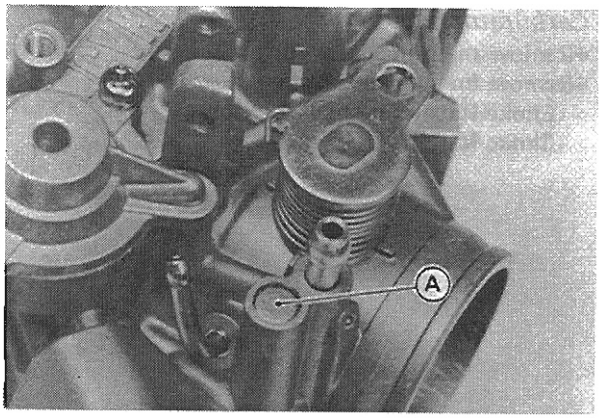

A. Pilot Screw Plug

○Turn in the pilot screw and count the number of turns until it seats fully but not tightly, and then remove the screw. Use this number of turns to set the screw to its original position during assembly.
●While prying out the float pivot pin with an awl or other suitable tool, pull it out with needle nose pliers.

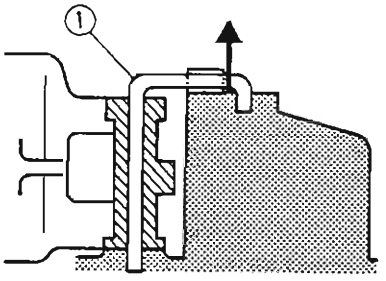

1. Float Pivot Pin

Carburetor Assembly

●Note the following
●Install the float on the carburetor.
○Tap the float pivot pin lightly, to press it evenly into the float chamber body as shown.

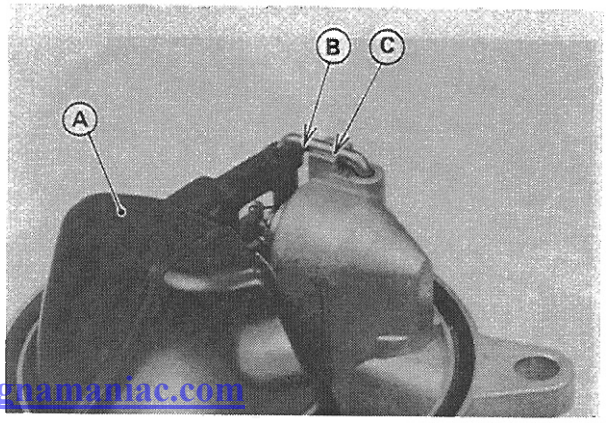

A. Float
B. Do not tap here.
C. Tap the pin as far as it will go.

http://manuals.magnamaniac.com

○Replace the float chamber and bottom cover O-rings with new ones when installing.
●Install the front carburetor onto the **F** marked chamber and the rear carburetor onto the **R** marked chamber respectively.

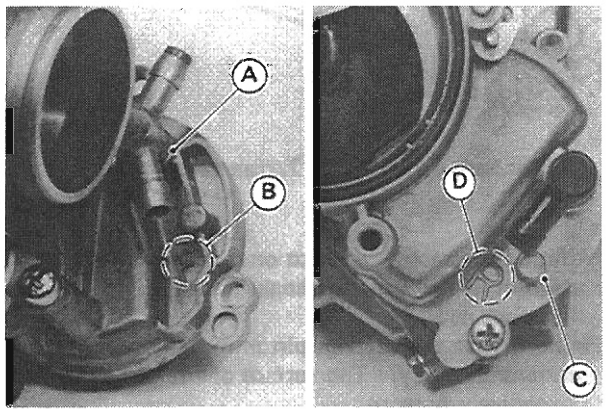

A. Front Carburetor
B. F Mark
C. Rear Carburetor
D. R Mark

○Keep dirt or other foreign material from entering into the float chamber.

CAUTION

○If dirt gets into the float chamber, the float valve may become stuck open, causing carburetor overflow and requiring carburetor cleaning.

CAUTION

○Do not force the needle jet holder (air bleed pipe) and main jet or overtighten them. They could be damaged requiring replacement.

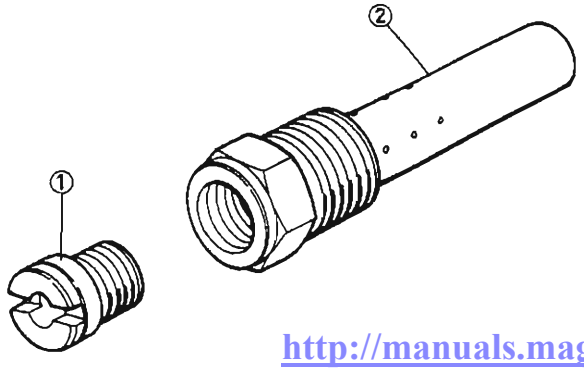

1. Main Jet
2. Needle Jet Holder

●Turn in the pilot screw fully but not tightly, and then back it out the same number of turns counted during disassembly.
○A carburetor has different "turns out" of the pilot screw for each individual unit. When setting the pilot screw, use the "turns out" determined during disassembly. Use the specifications in this manual only if the original number is unknown.
●For the US and Switzerland models, install the pilot screw plug as follows:
○Install a new plug in the pilot screw hole, and apply a small amount of a bonding agent to the circumference of the plug to fix the plug.

CAUTION

Do not apply too much bonding agent to the plug, or the pilot screw itself may be fixed.

Plug Installation

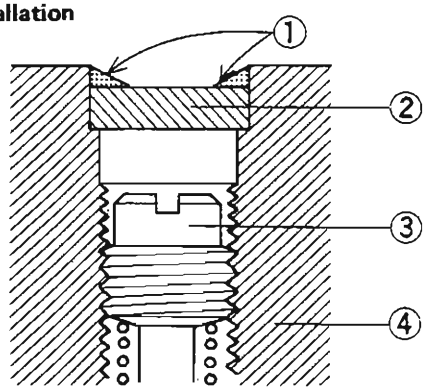

1. Apply a bonding agent.
2. Plug
3. Pilot Screw
4. Carburetor Body

●Install the O-ring in the coasting enricher system cover so that the flat side faces in.

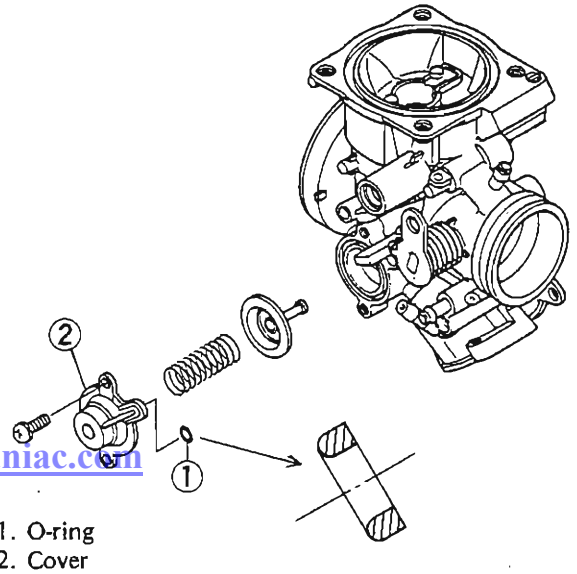

1. O-ring
2. Cover

http://manuals.magnamaniac.com

Carburetor Inspection

WARNING

○Gasoline is extremely flammable and can be explosive under certain conditions. Turn the ignition switch OFF. Do not smoke. Make sure the area is well ventilated and free from any source of flame or sparks; this includes any appliance with a pilot light.

●Move the choke lever to check that the starter plungers move smoothly and return by spring tension.
★If the starter plungers do not work properly, replace the carburetor.
●Turn the throttle lever to check that the throttle butterfly valves move smoothly and return by spring tension.
★If the throttle valves do not move smoothly, replace the carburetors.
●Check that the O-rings and diaphragms are in good condition.
O-rings for Drain Plug and Coasting Enricher
Diaphragms for Vacuum Piston and Coasting Enricher
★If any of the O-rings or diaphragms are not in good condition, replace them.
●Check the plastic tip of the float valve needle. It should be smooth, without any grooves, scratches, or other damage.

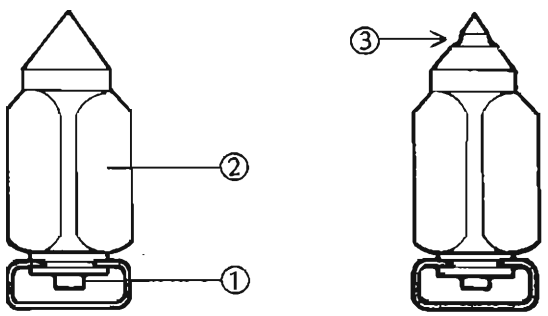

1. Rod
2. Valve Needle
3. Valve Needle Wear

★If the plastic tip is damaged, replace the needle.
★If it does not spring out, replace the needle.
●Check the tapered portion of the pilot screw for wear or damage.

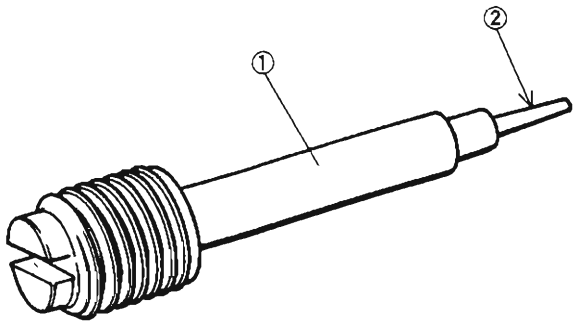

1. Pilot Screw
2. Tapered Portion

★If the pilot screw is worn or damaged on the tapered portion, it will prevent the engine from idling smoothly. Replace it.
●Check that the vacuum piston moves smoothly in the carburetor body. The surface of the piston must not be excessively worn.
★If the vacuum piston does not move smoothly, or if it is very loose in the carburetor body, replace both the body and the vacuum piston.
●Check the inlet vacuum passage for the coasting enricher system, if backfiring occurs too often.
★If the passage is clogged, blow it clear with compressed air.

Fuel Pump

Removal

●Remove the fuel tank.

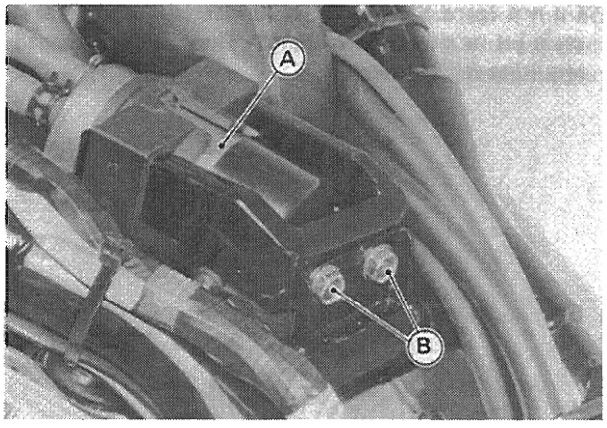

A. Fuel Pump
B. Pump Bolts

http://manuals.magnamaniac.com

●Remove the bolts and take the fuel pump out of the frame.
●Disconnect the pump wire connector.
●Pull the fuel hoses off the fuel pump.

WARNING

○Gasoline is extremely flammable and can be explosive under certain conditions. Turn the ignition switch OFF. Do not smoke. Make sure the area is well ventilated and free from any source of flame or sparks; this includes any appliance with a pilot light.
○Be prepared for fuel spillage.

Installation Notes

●Connect the fuel hoses to the pump fittings as shown.

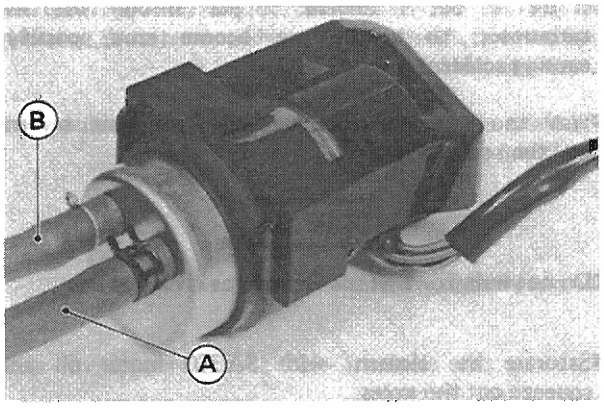

A. Fuel Hose from Filter
B. Fuel Hose to Carburetors

●Be sure to route the hoses so they will not be kinked or stretched.

Fuel Filter

Removal

●Remove the fuel tank.
●Remove the RH frame top tube cover.
●Pull the filter off the hose.

WARNING

○Gasoline is extremely flammable and can be explosive under certain conditions. Turn the ignition switch OFF. Do not smoke. Make sure the area is well ventilated and free from any source of flame or sparks; this includes any appliance with a pilot light.
○Be prepared for fuel spillage.

http://manuals.magnamaniac.com

Installation Notes

●Install the fuel filter so that the arrow on it shows the fuel flow from the fuel tank to the fuel pump.

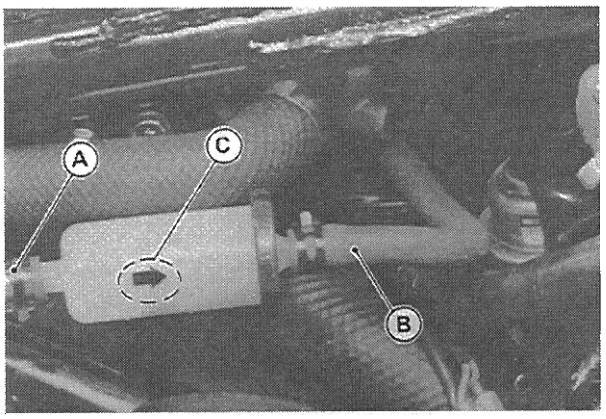

A. Fuel Hose from Tank C. Arrow
B. Fuel Hose to Pump

●Be sure to route the hoses so they will not be kinked or stretched.

Inspection

●Visually inspect the fuel filter.
★If the filter is clear with no signs of dirt or other contamination, it is OK and need not be replaced.
★If the filter is dark or looks dirty, replace it. Also, check the rest of the fuel system for contamination.

Air Cleaner

Element (Housing) Removal

●Remove the following parts.
Seat
Fuel Tank
Frame Top Tube Cover
Radiator Cover
●Remove the air cleaner housing mounting bolts.

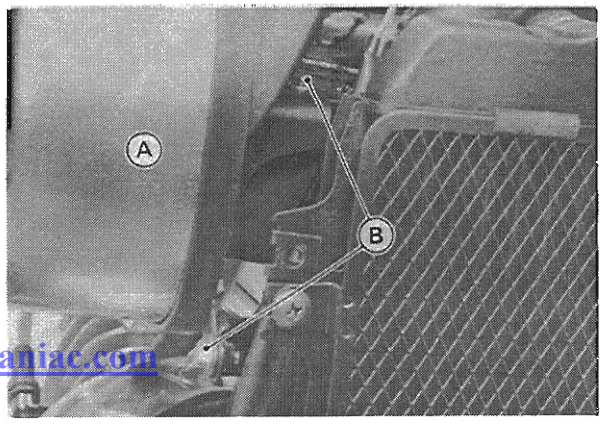

A. Air Cleaner Housing B. Bolts

●Remove the screws and take the inner cover off the housing (VN1500-B Only).

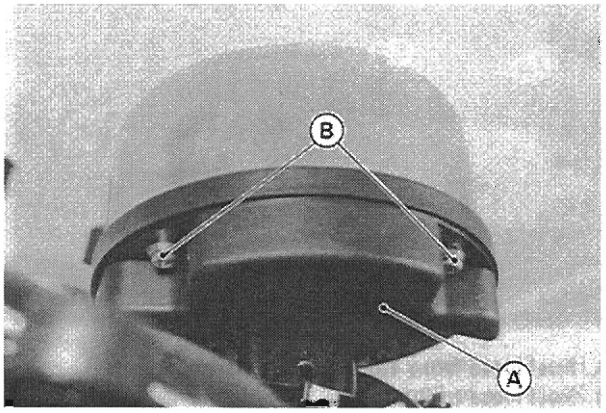

A. Inner Cover B. Screws

●Remove the air cleaner cover by taking out the cover bolts.

VN1500-A

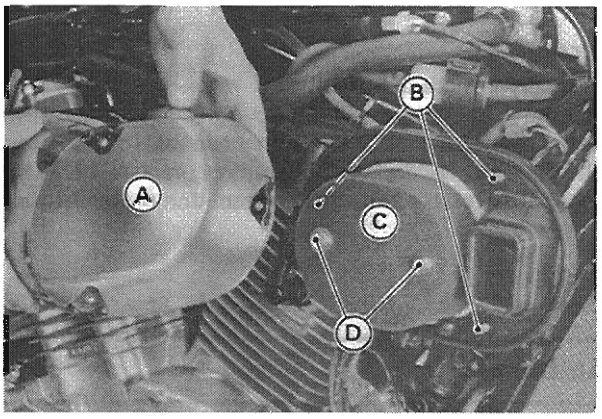

A. Cover C. Element
B. Cover Bolts D. Element Bolts

VN1500-B

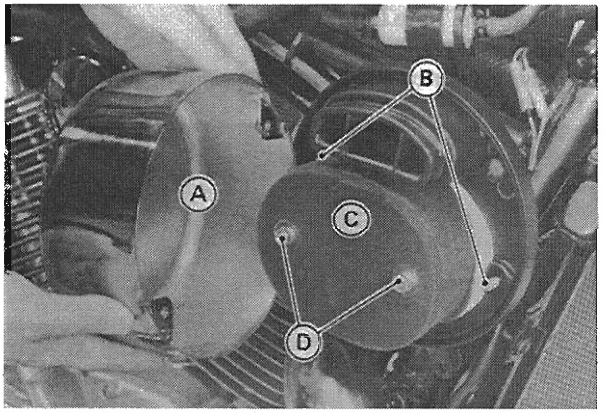

A. Cover C. Element
B. Cover Bolts D. Element Bolts

●Remove the bolts to remove the element.
●Remove the other side element in the same manner.

Element Cleaning

WARNING

○**Clean the element in a well-ventilated area, and take care that there is no spark or flame anywhere near the working area; this includes any appliance with a pilot light. Because of the danger of highly flammable liquids, do not use gasoline or low flash-point solvents to clean the element. A fire or explosion could result.**

●Remove the air cleaner element.

WARNING

○**If dirt or dust is allowed to pass through into the carburetors, the throttle may become stuck, possibly causing accident.**

●Wash the element in a bath of high flash-point solvent and then squeeze it dry.

CAUTION

○**Do not wring or twist the element as it may tear.**

●Saturate the element with SAE30 motor oil and squeeze out the excess.
●Wrap the element in a clean dry cloth and squeeze it as dry as possible.

Air Cleaner Housing Installation

●Note the following.
○The right and left air cleaner housing are identical. Use the marked R for the right side and L for the left side.

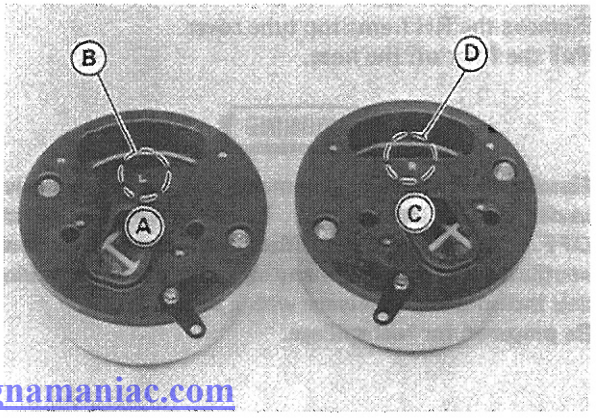

A. LH Housing C. RH Housing
B. "L" Mark D. "R" Mark

http://manuals.magnamaniac.com

Air Cleaner Duct Installation

●Note the following.

○Install the air cleaner duct with its side marked "UPPER" facing upwards.

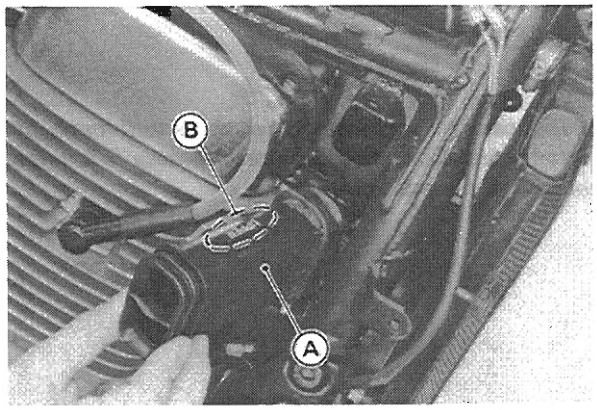

A. Duct B. "UPPER" Mark

○Lubricate the air cleaner duct ends with a soap and water solution, then fit the duct into the surge tank or air cleaner housing.

Surge Tank

Surge Tank Removal

●Remove the air cleaner housing.

●Remove the thermostat housing.

●Unconnect the air cleaner duct upper end.

●Remove the surge tank from the frame.

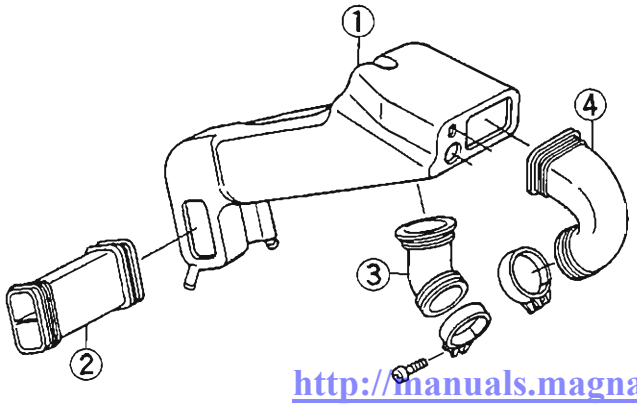

1. Surge Tank
2. Air Cleaner Duct
3. Surge Tank Duct (Rear)
4. Surge Tank Duct (Front)

http://manuals.magnamanuac.com

Evaporative Emission Control System (US California Vehicle only)

The Evaporative Emission Control System routes fuel vapors from the fuel system into the running engine or stores the vapors in a canister when the engine is stopped. Although no adjustments are required, a thorough visual inspection must be made at the intervals specified by the Periodic Maintenance Chart.

Parts Removal/Installation Notes

WARNING

○**Gasoline is extremely flammable and can be explosive under certain conditions. Turn the ignition switch OFF. Do not smoke. Make sure the area is well ventilated and free from any source of flame or sparks; this includes any appliance with a pilot light.**

CAUTION

○**If gasoline, solvent, water or any other liquid enters the canister, the canister's vapor absorbing capacity is greatly reduced. If the canister does become contaminated replace it with a new one.**

●To prevent gasoline from flowing into or out of the canister, hold the separator perpendicular to the ground.

●Connect the hoses according to the diagram of the system. Make sure they do not get pinched or kinked.

Hose Inspection (Periodic Inspection)

●Check that the hoses are securely connected.

●Replace any kinked, deteriorated or damaged hoses.

Separator Inspection

●Disconnect the hoses from the liquid/vapor separator, and remove the separator from the motorcycle.

●Visually inspect the separator for cracks and other damage.

★If the separator has any cracks or is badly damaged, replace it with a new one.

Separator Operation Test

WARNING

○**Gasoline is extremely flammable and can be explosive under certain conditions. Turn the ignition switch OFF. Do not smoke. Make sure the area is well ventilated and free from any source of flame or spark; this includes any appliance with a pilot light.**

●Connect the hoses to the separator, and install the separator on the motorcycle.
●Disconnect the breather hose from the separator, and inject about **20 mL** of gasoline into the separator through the hose fitting.
●Disconnect the fuel return hose from the fuel tank.
●Run the open end of the return hose into the container level with the tank top.
●Start the engine, and let it idle.
★If the gasoline in the separator comes out of the hose, the separator works well. If it does not, replace the separator with a new one.

Canister Inspection

●Remove the canister, and disconnect the hoses from the canister.
●Visually inspect the canister for cracks and other damage.
★If the canister in cracked or badly damaged, replace it with a new one.

NOTE

○*The canister is designed to work well through the motorcycle's life without any maintenance if it is used under normal conditions.*

Evaporative Emission Control System

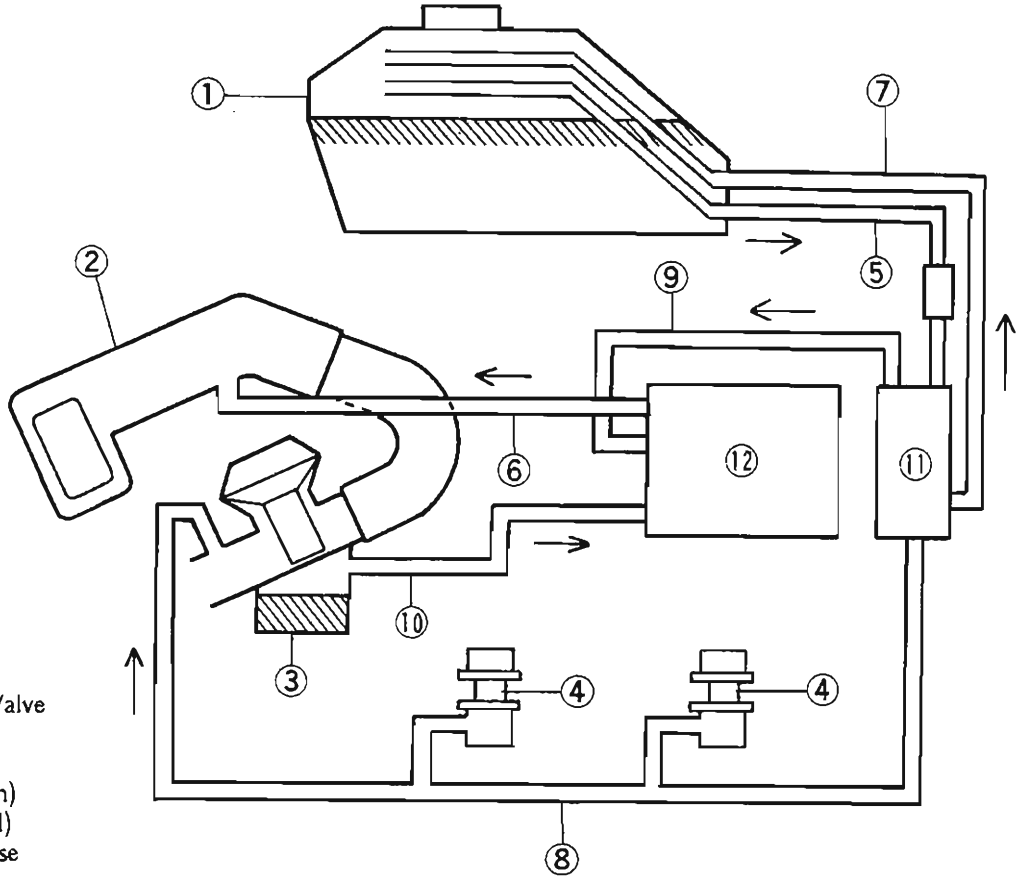

1. Fuel Tank
2. Surge Tank
3. Rear Carburetor
4. Vacuum Switch Valve
5. Breather Hose (Blue)
6. Purge Hose (Green)
7. Return Hose (Red)
8. Vacuum Pulse Hose (White)
9. Breather Hose (Blue)
10. Breather Hose (Yellow)
11. Separator : return pump
12. Canister

http://manuals.magnamaniac.com

Cooling System

3

Table of Contents

Exploded View 3-2
Specifications 3-3
Coolant Flow Chart 3-3
Coolant 3-4
- Coolant Level Inspection 3-4
- Coolant Draining 3-4
- Coolant Filling 3-5
- Pressure Testing 3-6

Water Pump 3-6
- Visual Leak Inspection 3-6
- Water Pump, Mechanical Seal Removal 3-6
- Water Pump, Mechanical Seal Installation 3-7

Radiator and Cooling Fan 3-7
- Removal 3-7
- Installation 3-9
- Radiator Inspection 3-9
- Radiator Cap Inspection 3-9

Thermostat 3-10
- Removal 3-10
- Installation 3-11
- Inspection 3-11

Thermostat Fan Switch 3-12
- Removal 3-12
- Installation Note 3-12
- Inspection 3-12

http://manuals.magnamaniac.com

Exploded View

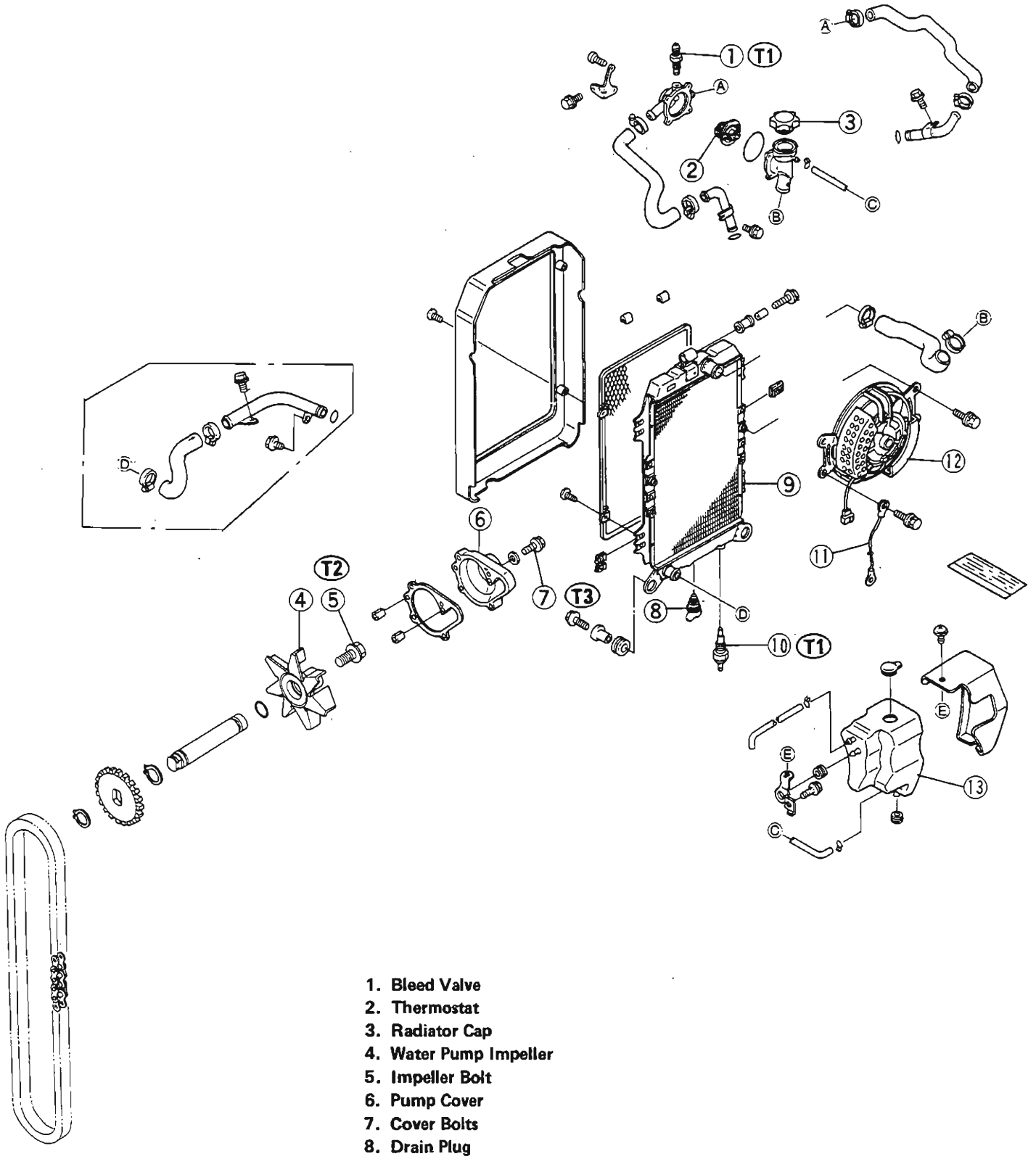

1. Bleed Valve
2. Thermostat
3. Radiator Cap
4. Water Pump Impeller
5. Impeller Bolt
6. Pump Cover
7. Cover Bolts
8. Drain Plug
9. Radiator
10. Cooling Fan Switch
11. Ground Wire
12. Cooling Fan
13. Reservoir Tank

T1: 7.8 N-m (0.80 kg-m, 69 in-lb)
T2: 8.8 N-m (0.90 kg-m, 78 in-lb)
T3: 9.8 N-m (1.0 kg-m, 87 in-lb)

http://manuals.magnamaniac.com

Specifications

Item	Standard
Coolant:	
Type	Permanent type of antifree (soft water and ethylene glycol plus corrosion and rust inhibitor chemicals for aluminum engines and radiators)
Mixed ratio	Soft water 50%, coolant 50%
Freezing point	–35°C (–31°F)
Total amount	2.3 L
Radiator:	
Radiator cap relief pressure	93 – 123 kPa (0.95 – 1.25 kg/cm², 14 – 18 psi)
Thermostat:	
Valve opening temperature	80 – 84°C (176 – 183°F)
Valve full opening lift	More than 8 mm @95°C (203°F)

Coolant Flow Chart

When the engine is cold, the thermostat is closed, so that the coolant flow restricted through the small hole on the thermostat (air hole), causing the engine to warm up more quickly.

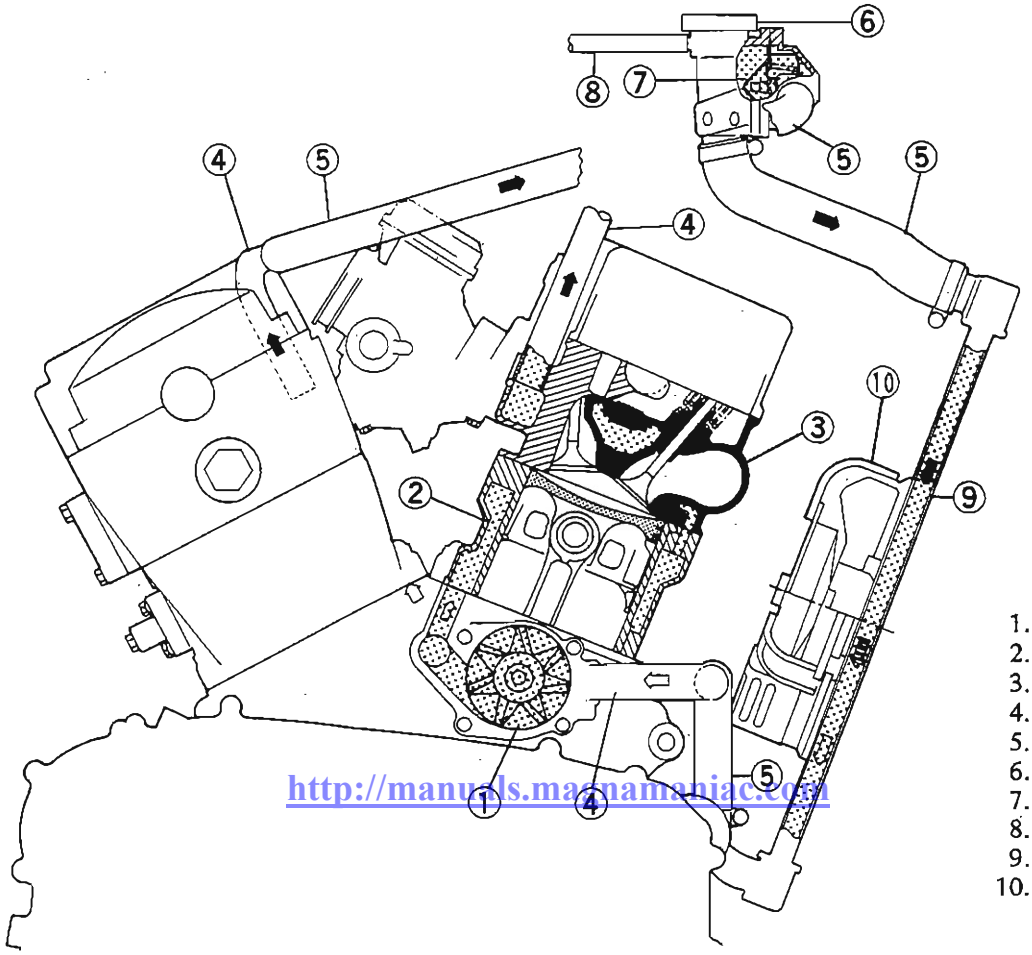

1. Water Pump
2. Water Jacket
3. Cylinder Head
4. Water Pipe
5. Water Hose
6. Radiator Cap
7. Thermostat
8. Reservoir Tank Tube
9. Radiator
10. Cooling Fan

http://manuals.mamamaniac.com

Coolant

Coolant Level Inspection

NOTE

○*Check the level when the engine is cold (room or ambient temperature).*

●Support the motorcycle perpendicular to the ground.
●Check the coolant level in the reservoir tank.
★If the coolant level is lower than the LOW mark, add coolant to the FULL mark.
○Remove the reservoir tank cover and open the tank cap.

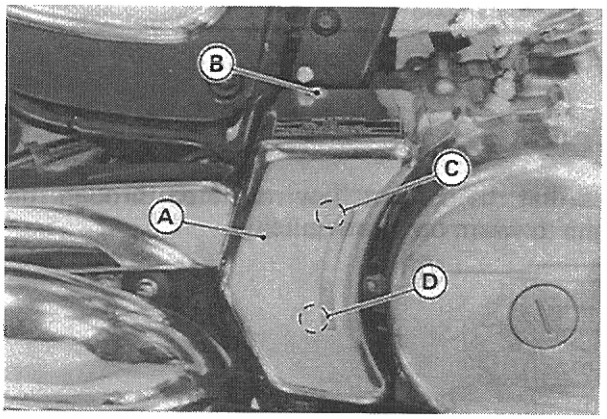

A. Cover
B. Screw
C. Full Mark
D. Low Mark

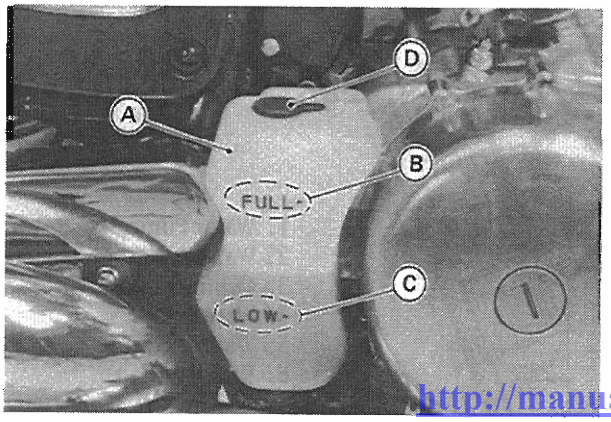

A. Reservoir Tank
B. FULL Mark
C. LOW Mark
D. Tank Cap

CAUTION

○For refilling, add the specified mixture of coolant and soft water. Adding water alone dilutes the coolant and degrades its anticorrosion properties.
○The diluted coolant can attack the aluminum engine parts. In an emergency, soft water can be added. But the diluted coolant must be returned to the correct mixture ratio within a few days.
○If coolant must be added often, or the reservoir tank has run completely dry; there is probably leakage in the cooling system. Check the system for leaks.

Coolant Draining

WARNING

○To avoid burns, do not remove the radiator cap or try to change the coolant when the engine is still hot. Wait until it cools down.
○Coolant on tires will make them slippery and can cause an accident and injury. Immediately wipe up or wash away any coolant that spills on the frame, engine, or other painted parts.
○Since coolant is harmful to the human body, do not drink it.

●Remove the following.
Seat
Fuel Tank
Radiator Cover

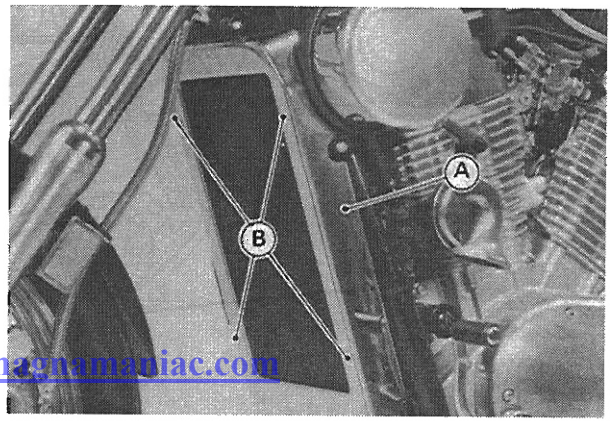

A. Radiator Cover
B. Screws

http://manuals.magnamaniac.com

○Place a suitable container beneath the radiator.
Coolant Drain Plug

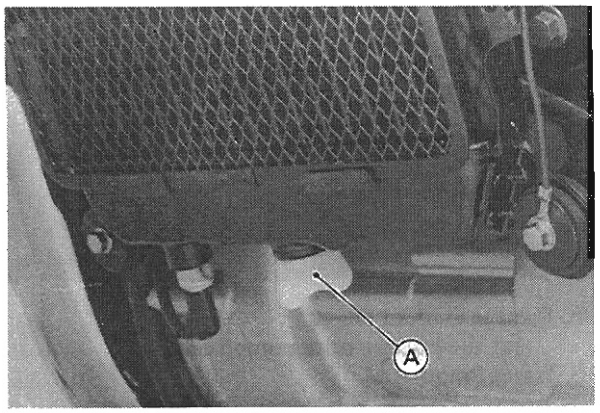

A. Drain Plug

Radiator Cap (Loosen)

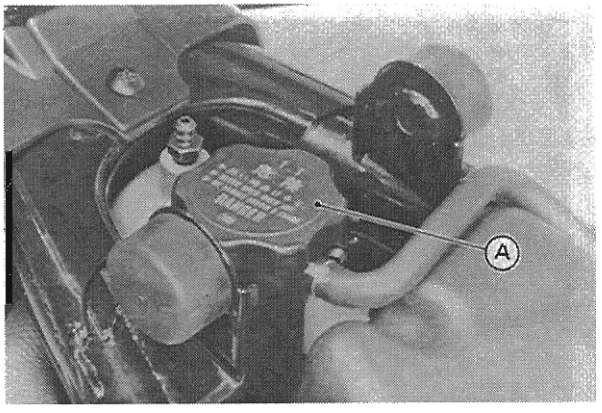

A. Radiator Cap

●Drain the coolant from the radiator.
●Remove the reservoir tank cover and take the tank off the frame.
●Pour the coolant into a suitable container.

Coolant Filling

●Tighten the drain plug at the bottom of the radiator securely.
●Fill the radiator up to the radiator filler neck with coolant, and install the radiator cap.

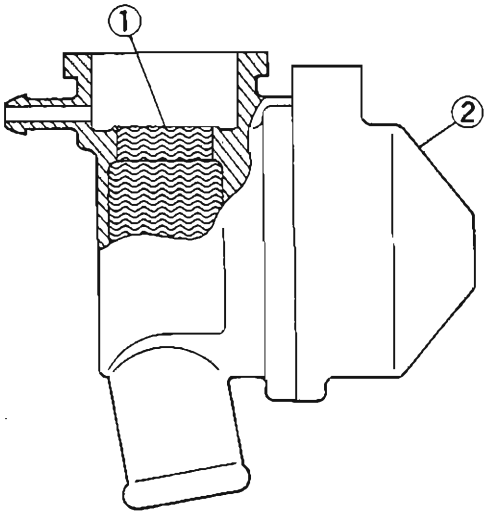

1. Coolant Level
2. Thermostat Housing

NOTE

○*Pour in the coolant slowly so that it can expel the air from the engine and radiator.*

●Fill the reservoir tank up to the FULL mark with coolant, and install the cap.

CAUTION

○**Soft or distilled water must be used with the antifreeze (see below for antifreeze) in the cooling system.**
○**If hard water is used in the system, it causes scale accumulation in the water passages, and considerably reduces the efficiency of the cooling system.**

Water and Coolant Mixture Ratio (Recommended)

Soft Water	:	**50%**
Coolant	:	**50%**
Freezing Point	:	**−35°C (−31°F)**

NOTE

○*Choose a suitable mixture ratio by referring to the coolant manufacturer's directions.*

●Start the engine, warm it up thoroughly until the radiator fan turns on and then stop the engine.
●Check the coolant level in the reservoir tank after the engine cools down.
★If the coolant level is lower than the LOW mark, add coolant up to the FULL mark.

http://manuals.magnamaniac.com

CAUTION

○**Do not add more coolant above the FULL mark.**

Pressure Testing

●Remove the radiator cap, and install a cooling system pressure tester on the radiator filler neck.

NOTE

○*Wet the cap sealing surfaces with water or coolant to prevent pressure leaks.*

●Build up pressure in the system carefully until the pressure reaches 123 kPa (1.25 kg/cm^2, 18 psi).

CAUTION

○**During pressure testing, do not exceed the pressure for which the system is designed. The maximum pressure is 123 kPa (1.25 kg/cm^2, 18 psi).**

●Watch the gauge for at least 6 seconds.

★If the pressure holds steady, the system is all right.

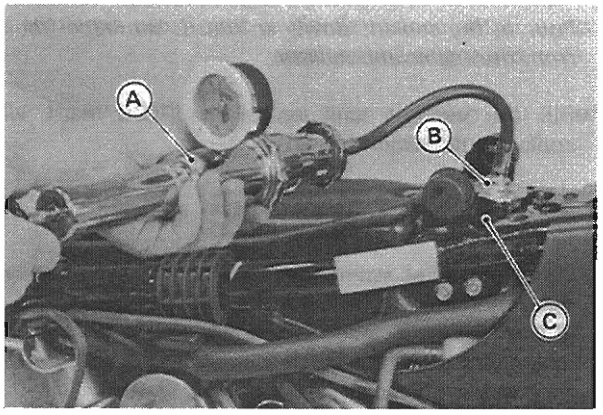

A. Pressure Tester
B. Adapter
C. Radiator Cap

★If the pressure drops soon, check for leaks.

Water Pump

Visual Leak Inspection

●Check the drainage outlet passage at the bottom of the water pump body for coolant leaks. Pump removal is not required.

★If the mechanical seal is damaged, the coolant leaks through the seal and drains through the passage. Replace the water pump unit.

http://manuals.magnamaniac.com

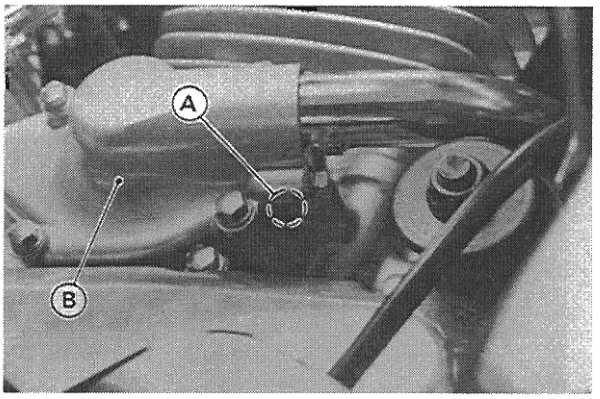

A. Drainage Outlet Passage
(at the bottom of the pump body)
B. Water Pump

Water Pump, Mechanical Seal Removal

●Remove the following parts.
Radiator Cover (see Radiator Removal)
Radiator Lower Bolts (see Radiator Removal)
Water Pipe

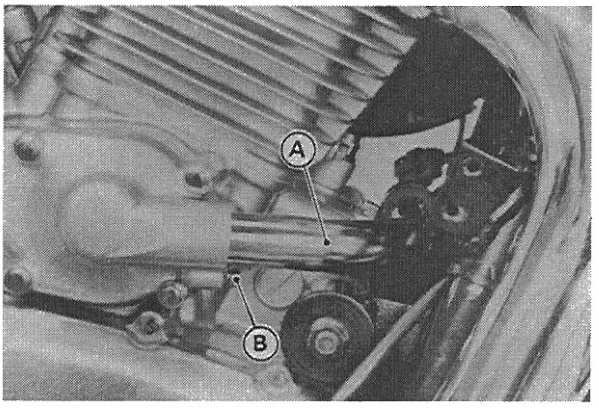

A. Water Pipe
B. Bolt

Water Pump Cover

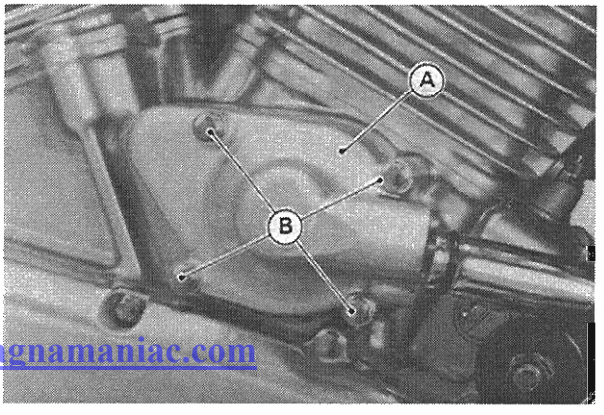

A. Water Pump Cover
B. Cover Bolts

Impeller Bolt

NOTE

○*The impeller bolt has left-handed threads, therefore it must be turned clockwise to remove.*

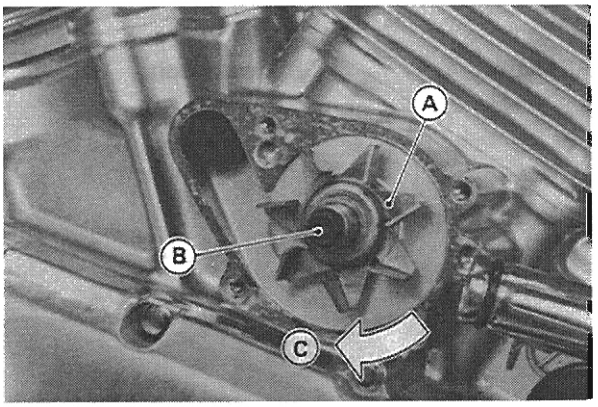

A. Impeller
B. Bolt
C. Direction of rotation

●Pry the mechanical seal flange off with a small chisel.

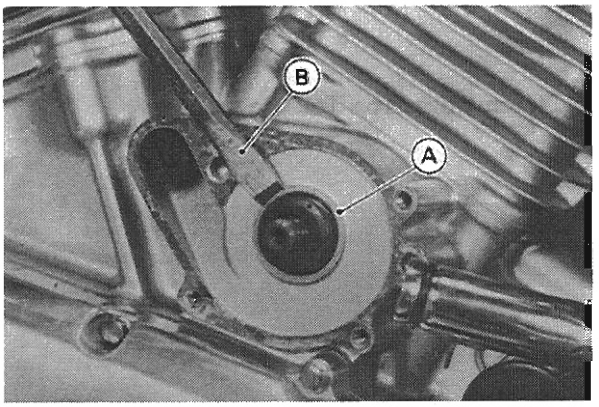

A. Flange
B. Chisel

●Pull the mechanical seal out of the crankcase with pliers. Discard the removed mechanical seal.

CAUTION

○**Be careful not to damage the water pump shaft and O-ring, and the inner sealing surface of the crankcase.**

Water Pump, Mechanical Seal Installation

●Note the following.

NOTE

○*Since the replacement mechanical seal has an adhesive coated body, do not apply liquid gasket to the exterior surface of the body.*

○Press the new mechanical seal into the hole by using a suitable socket until it bottoms out.

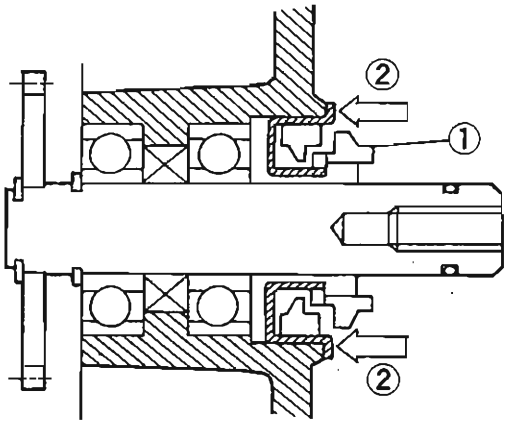

1. Mechanical Seal
2. Tap Here

○Apply a little coolant to the sliding surface to give the mechanical seal initial lubrication.
○Tighten the impeller bolt to the specified torque (see Exploded View).
○Replace the pump cover gasket with new ones.
○The water pump cover rear bolts have aluminum washers.

Radiator and Cooling Fan

http://manuals.magnamaniac.com

Removal

●Remove the following.
Radiator Cover

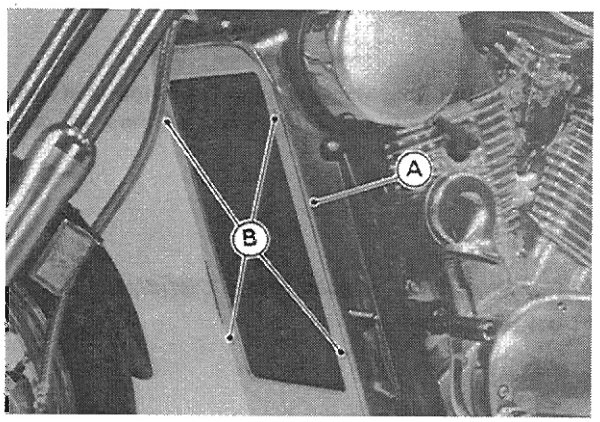

A. Radiator Cover B. Screws

Coolant (Draining)
Cooling Fan Switch Connector

WARNING

○The cooling fan is connected directly to the battery. The cooling fan may start even if the ignition switch is off. NEVER TOUCH THE COOLING FAN UNTIL THE COOLING FAN CONNECTOR IS DISCONNECTED. TOUCHING THE FAN BEFORE THE CONNECTOR IS DISCONNECTED COULD CAUSE INJURY FROM THE FAN BLADES.

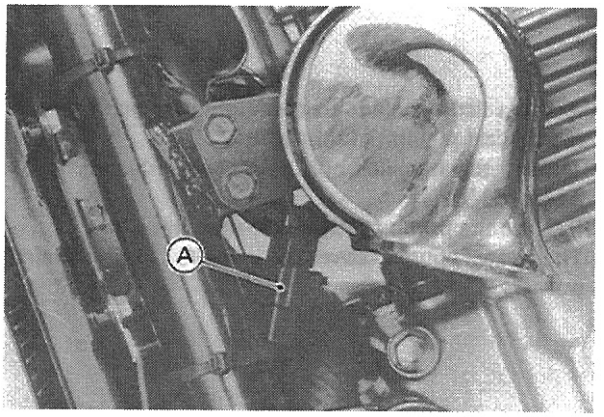

A. Fan Switch Connector

Cooling Fan Switch
Radiator Lower Bolts

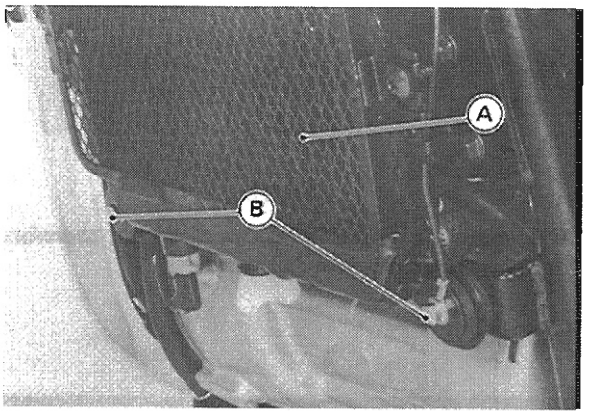

A. Radiator B. Lower Bolts

Radiator Upper Bolt

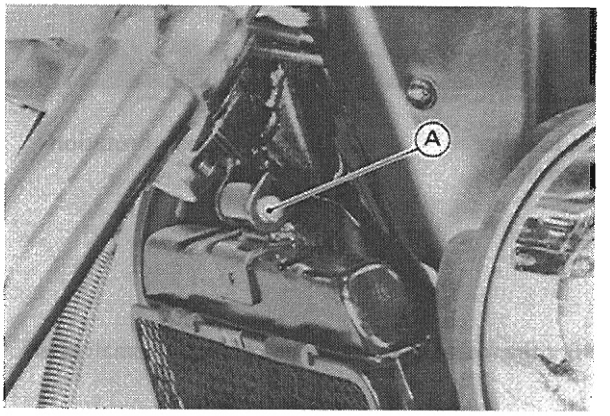

A. Upper Bolt

Left and Right Top Tube Covers

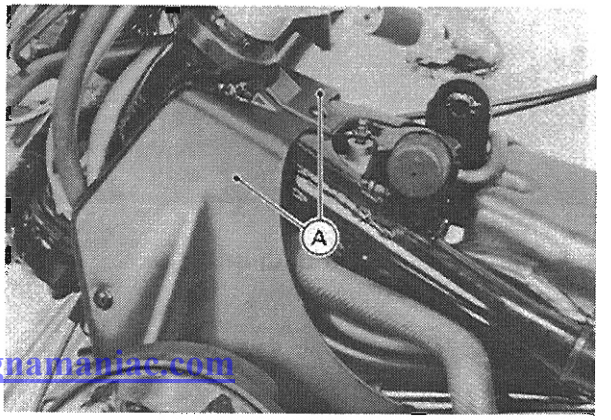

A. Top Tube Covers

http://manuals.magnamaniac.com

Radiator Hoses

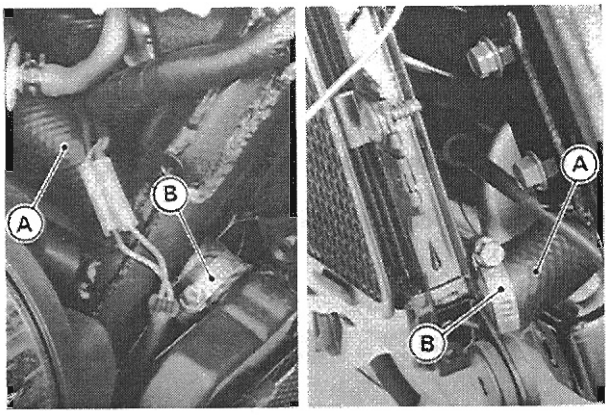

A. Radiator Hoses B. Clamps

Fan Mounting Bolts

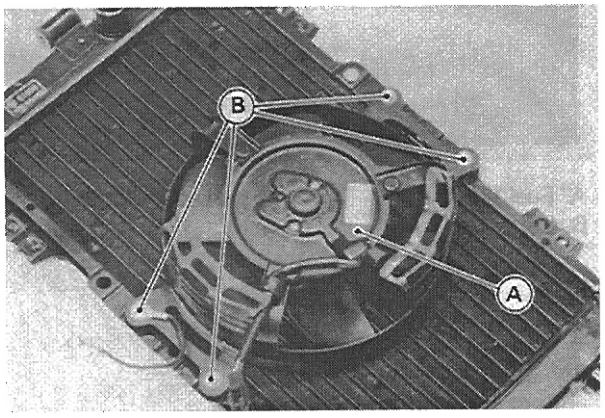

A. Fan B. Mounting Bolts

Installation

●Be sure to attach the ground wire to the fan mounting bolt.

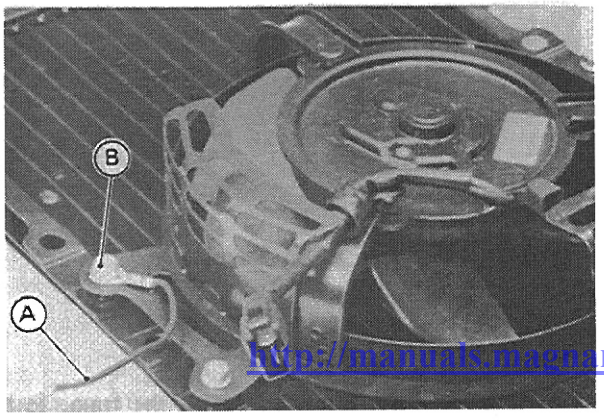

A. Ground Wire B. Mounting Bolt

Radiator Inspection

●Check the radiator core.

★If there are obstructions to air flow, remove them.

★If the corrugated fins are deformed, carefully straighten them.

★If the air passages of the radiator core are blocked more than 20% by unremovable obstructions or irreparably deformed fins, replace the radiator with a new one.

CAUTION

○**When cleaning the radiator with a steam cleaner, be careful of the following to prevent radiator damage.**

1) Keep the steam gun away more than 0.5 m from the radiator core.

2) Hold the steam gun perpendicular to the core surface.

3) Run the steam gun horizontally following the core fin direction. Running it vertically may damage the fins.

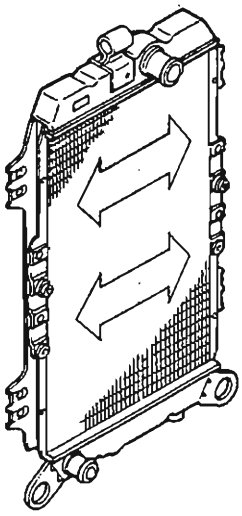

Radiator Cap Inspection

●Check the condition of the top and bottom valve seals of the radiator cap.

★If either of them shows visible damage, replace the cap.

http://manuals.magnamaniac.com

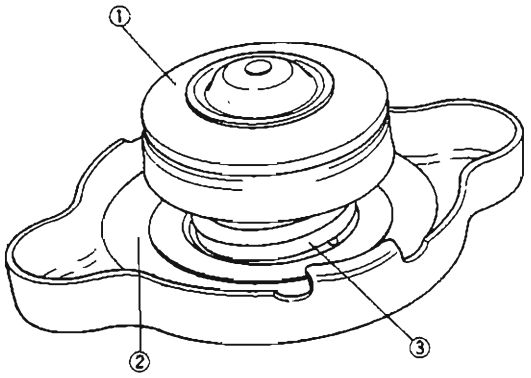

1. Bottom Valve Seal
2. Top Valve Seal
3. Valve Spring

●Install the cap on a cooling system pressure tester.

NOTE

○*Wet the cap sealing surfaces with water or coolant to prevent pressure leaks.*

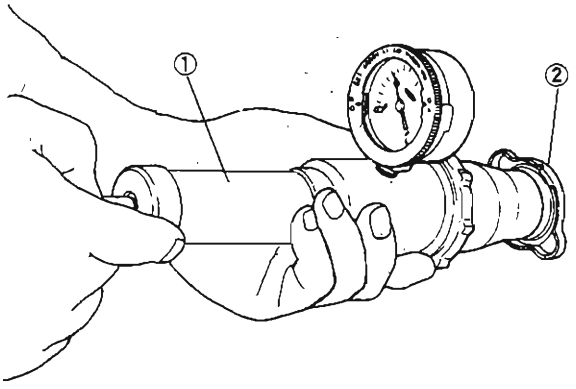

1. Pressure Tester
2. Radiator Cap

●Watching the pressure gauge, pump the pressure tester to build up the pressure until the relief valve opens: the gauge hand flicks downward. Stop pumping at once. The relief valve must open within the specified range in the table below and the gauge hand must remain within the same range at least 6 seconds.

Radiator Cap Relief Pressure

Standard: 93 – 123 kPa
(0.95 – 1.25 kg/cm², 14 – 18 psi)

★If the cap cannot hold the specified pressure, or if it holds too much pressure, replace it with a new one.

Thermostat

Removal

●Remove the following.
Fuel Tank
Coolant : about 200 mL (Draining)
Fuel Filter
Thermostat Housing Bolts

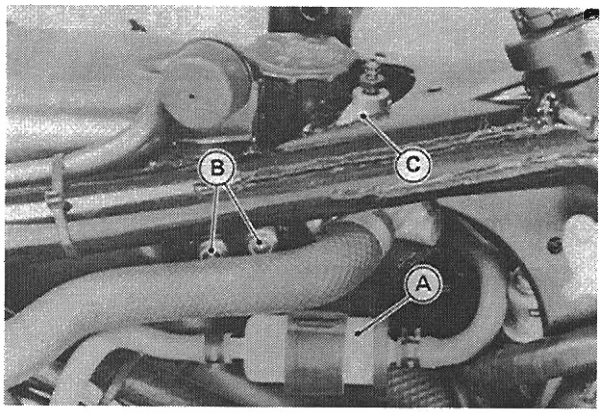

A. Fuel Filter
B. Bolts
C. Thermostat Housing

Cooling Hoses (LH and Lower)

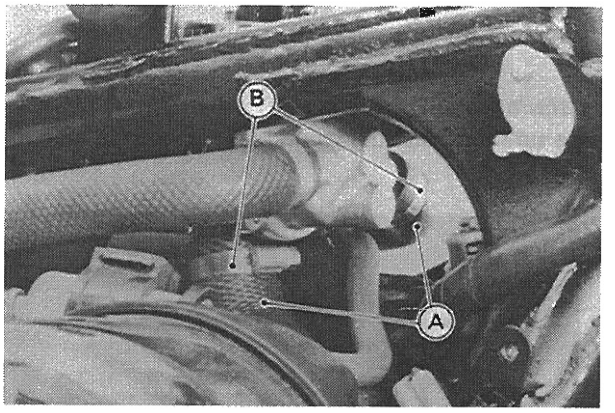

A. Hoses
B. Clamps

http://manuals.magnamaniac.com

●Pull the thermostat housing out of the frame to the right.
●Remove the thermostat from its housing.

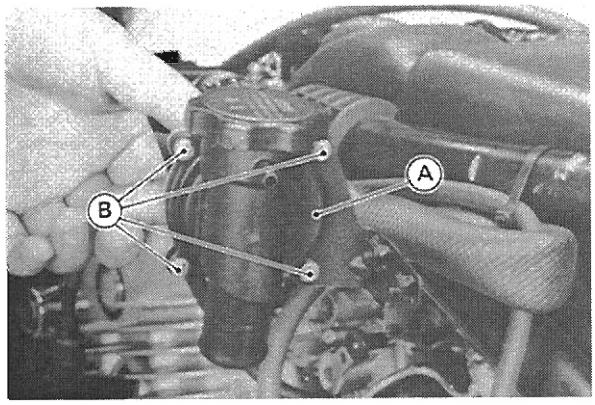

A. Thermostat Housing B. Screws

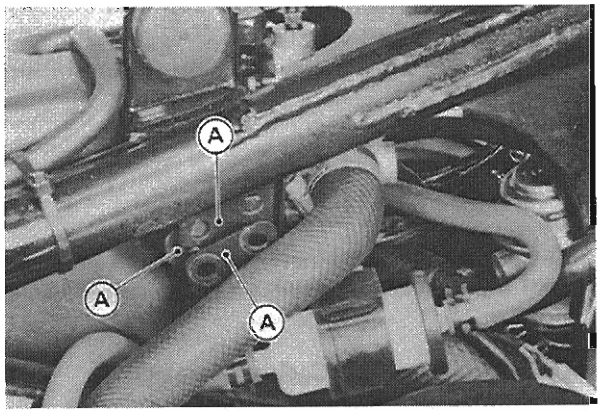

A. Brackets

Installation

●Install the thermostat noting the following.

○Install the thermostat in the housing so that the air hole is on top.

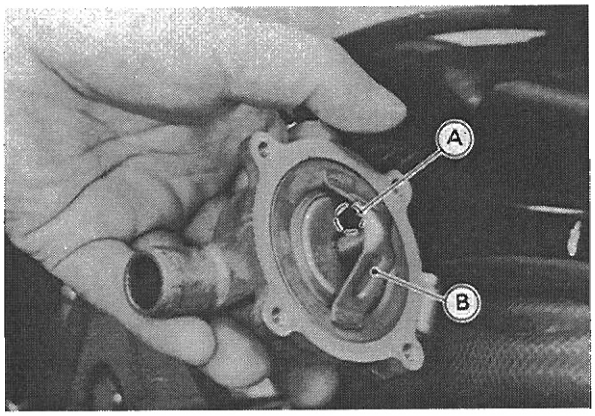

A. Air Hole B. Thermostat

○Be sure to install the O-ring in the housing.

○Install the fuel filter bracket with thermostat housing onto the frame bracket.

Inspection

●Remove the thermostat, and inspect the thermostat valve at room temperature.

★If the valve is open, replace the valve with a new one.

●To check valve opening temperature, suspend the thermostat in a container of water and raise the temperature of the water.

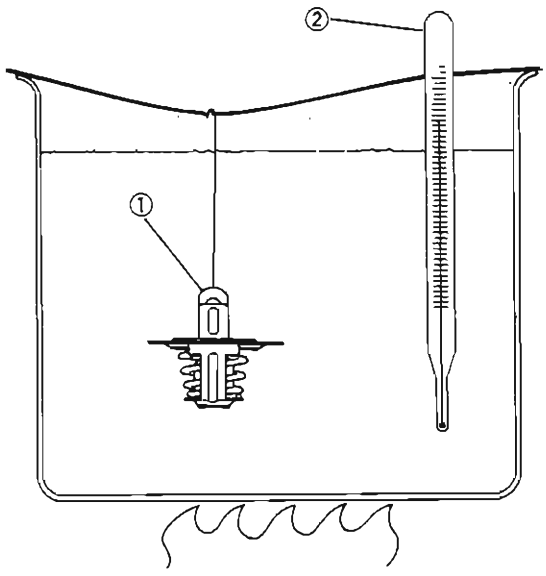

1. Thermostat 2. Thermometer

★If the measurement is out of the service limit range, replace the thermostat.

http://manuals.magnamaniac.com

Thermostat Valve Opening Temperature

80 – 84°C (176 – 183°F)

Thermostatic Fan Switch

Removal

CAUTION

○**The fan switch should never be allowed to fall on a hard surface. Such a shock to these parts can damage them.**

●Drain the coolant (see Coolant Draining).
●Remove the fan switch connector.
●Remove the fan switch.

Installation Note

●Tighten the fan switch to the specified torque (see Exploded View).

Inspection

Refer to the Electrical System chapter.

http://manuals.magnamaniac.com

Engine Top End

Table of Contents

4

Exploded View 4-2
Specifications 4-6
Special Tools 4-7
Sealant 4-7
Clean Air System
(US and Switzerland models) 4-8
Air Suction Valve Inspection 4-8
Vacuum Switch Valve Test 4-8
Camshaft Chain Tensioner 4-8
Removal 4-8
Installation 4-9
Rocker Case Cap 4-10
Removal 4-10
Installation 4-10
Rocker Shafts, Rocker Arms, Rocker Case . . . 4-10
Removal 4-10
Installation 4-11
HLA (Hydraulic Lash Adjuster) 4-12
HLA Removal 4-12
HLA Installation 4-12
HLA Air Bleeding 4-12
Inspection 4-13
Camshafts 4-13
Removal 4-13
Installation (Including Chain
Timing Procedure) 4-13
Camshaft Sprocket Assembly 4-14
Camshaft, Rocker Case Wear 4-14
Camshaft Chain Wear 4-15
KACR (Kawasaki Automatic
Compression Release) 4-15
Removal 4-15
Installation 4-15
Inspection 4-15
Cylinder Head 4-16
Cylinder Compression Measurement . . . 4-16
Removal 4-16
Installation 4-16
Valves 4-16
Valve Clearance Adjustment 4-16
Valve Removal 4-17
Valve Installation 4-17
Valve Guide Removal 4-17
Valve Guide Installation 4-17
Valve Face Contact Inspection 4-18
Valve Seat Outside Diameter 4-18
Valve Seat Width Inspection 4-18
Valve Seat Repair (Valve Lapping) 4-18
Measuring Valve-to-Guide Clearance
(Wobble Method) 4-20
Cylinders, Pistons 4-21
Cylinder Removal 4-21
Cylinder Installation 4-21
Piston Removal 4-22
Piston Installation 4-22
Cylinder Wear 4-23
Piston Wear 4-23
Piston Ring,
Piston Ring Groove Wear 4-23
Piston Ring End Gap 4-23
Muffler 4-24
Removal (for VN1500-A) 4-24
Installation 4-25
Removal (for VN1500-B) 4-25
Installation 4-26

http://manuals.magnamaniac.com

Exploded View

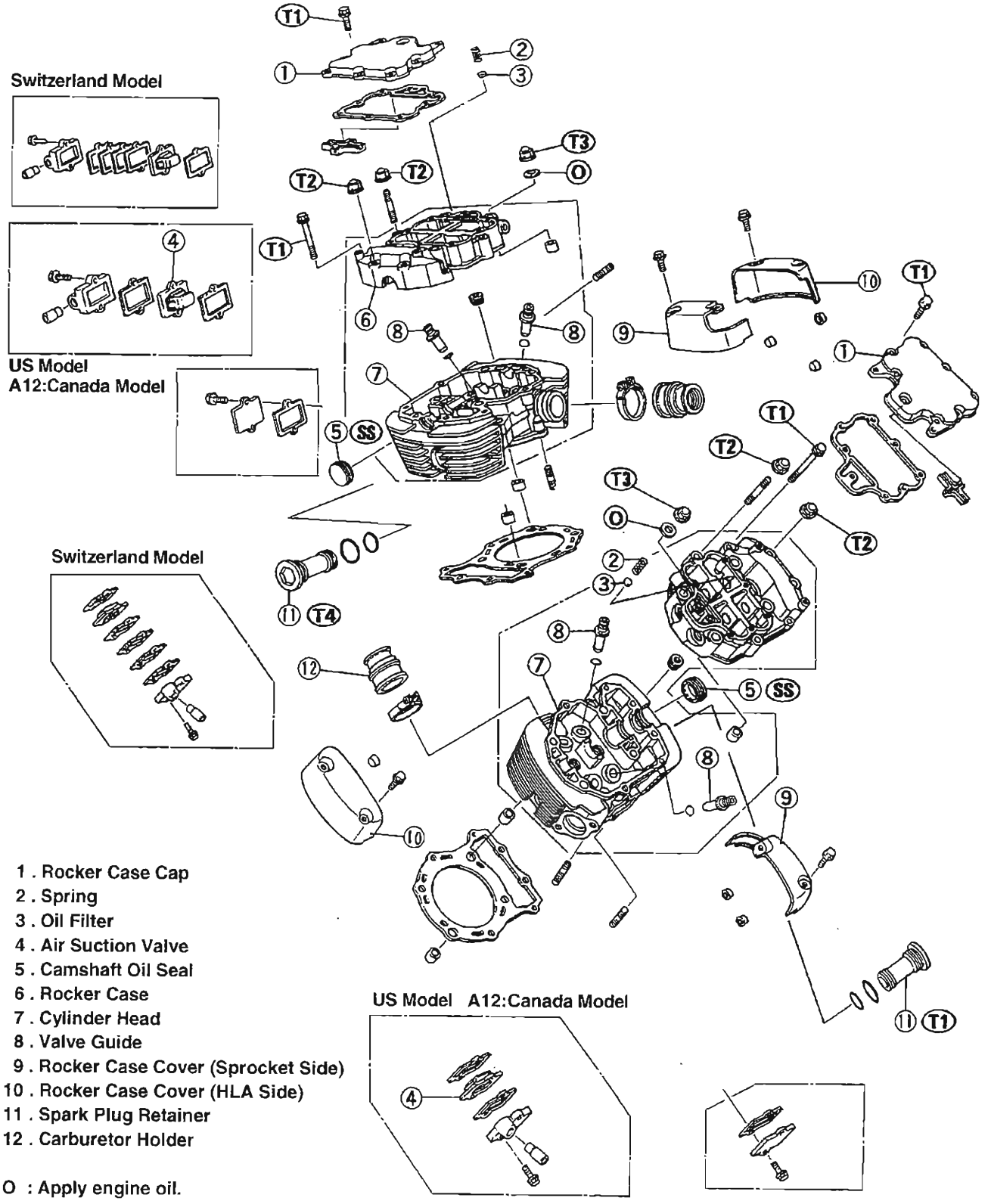

1 . Rocker Case Cap
2 . Spring
3 . Oil Filter
4 . Air Suction Valve
5 . Camshaft Oil Seal
6 . Rocker Case
7 . Cylinder Head
8 . Valve Guide
9 . Rocker Case Cover (Sprocket Side)
10 . Rocker Case Cover (HLA Side)
11 . Spark Plug Retainer
12 . Carburetor Holder

O : Apply engine oil.
SS : Apply silicone sealant.
T1 : 8.8 N-m (0.90 kg-m, 78 in-lb)
T2 : 25 N-m (2.5 kg-m, 18.0 ft-lb)
T3 : 78 N-m (8.0 kg-m, 58 ft-lb)
T4 : 12 N-m (1.2 kg-m, 104 in-lb)

http://manuals.magnamaniac.com

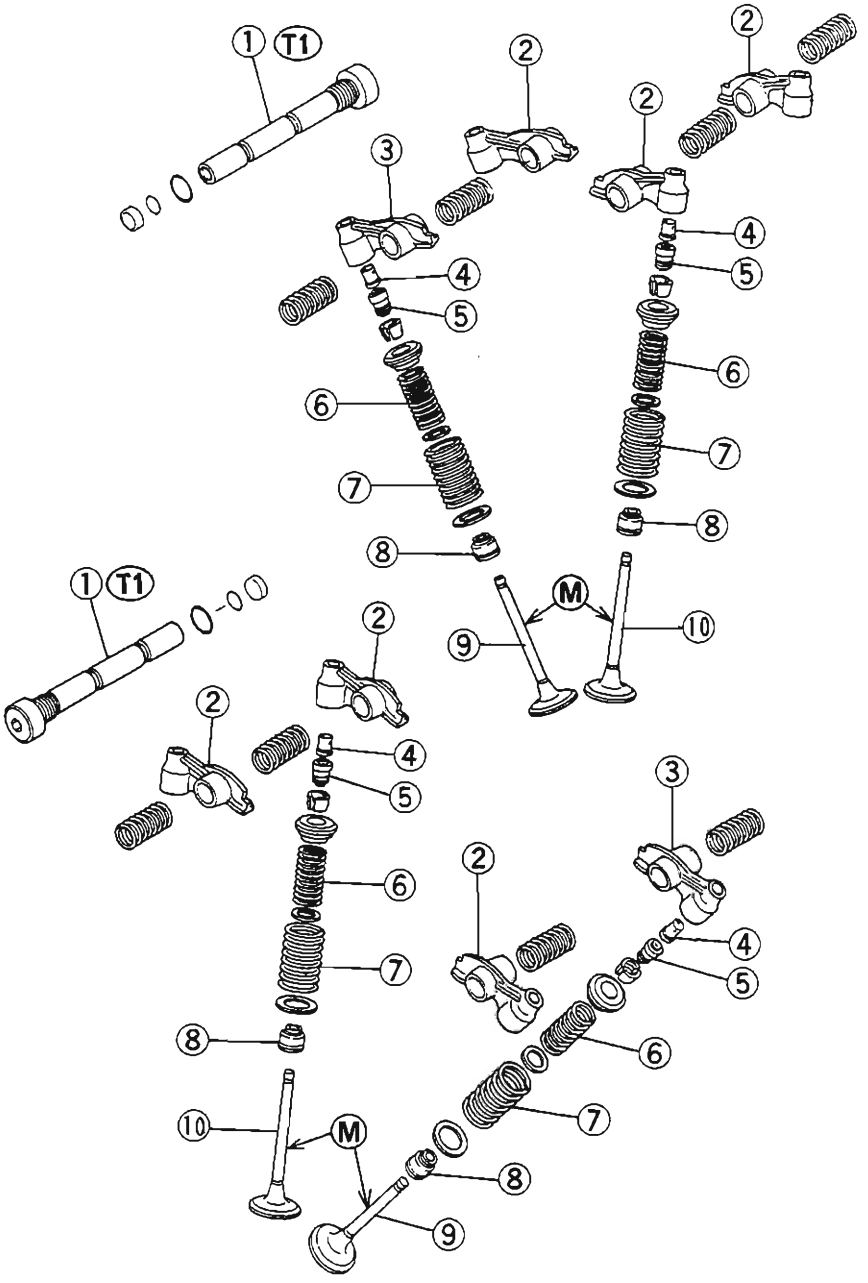

1. Rocker Shaft
2. Rocker Arm (x 3/1 Cylinder)
3. Rocker Arm (x 1/1 Cylinder)
4. Oil Chamber
5. Hydraulic Lash Adjuster
6. Valve Spring (Inner)
7. Valve Spring (Outer)
8. Oil Seal
9. Valve Stem (Exhaust)
10. Valve Stem (Intake)

http://manuals.magnamaniac.com

M : Apply molybdenum disulfide grease.
T1 : 25 N-m (2.5 kg-m, 18.0 ft-lb)

1. Cylinder
2. Drain Plug
3. Piston
4. Camshaft Chain
5. Camshaft Sprocket
6. Camshaft
7. KACR (Automatic Compression Release)
8. Camshaft Chain Tensioner

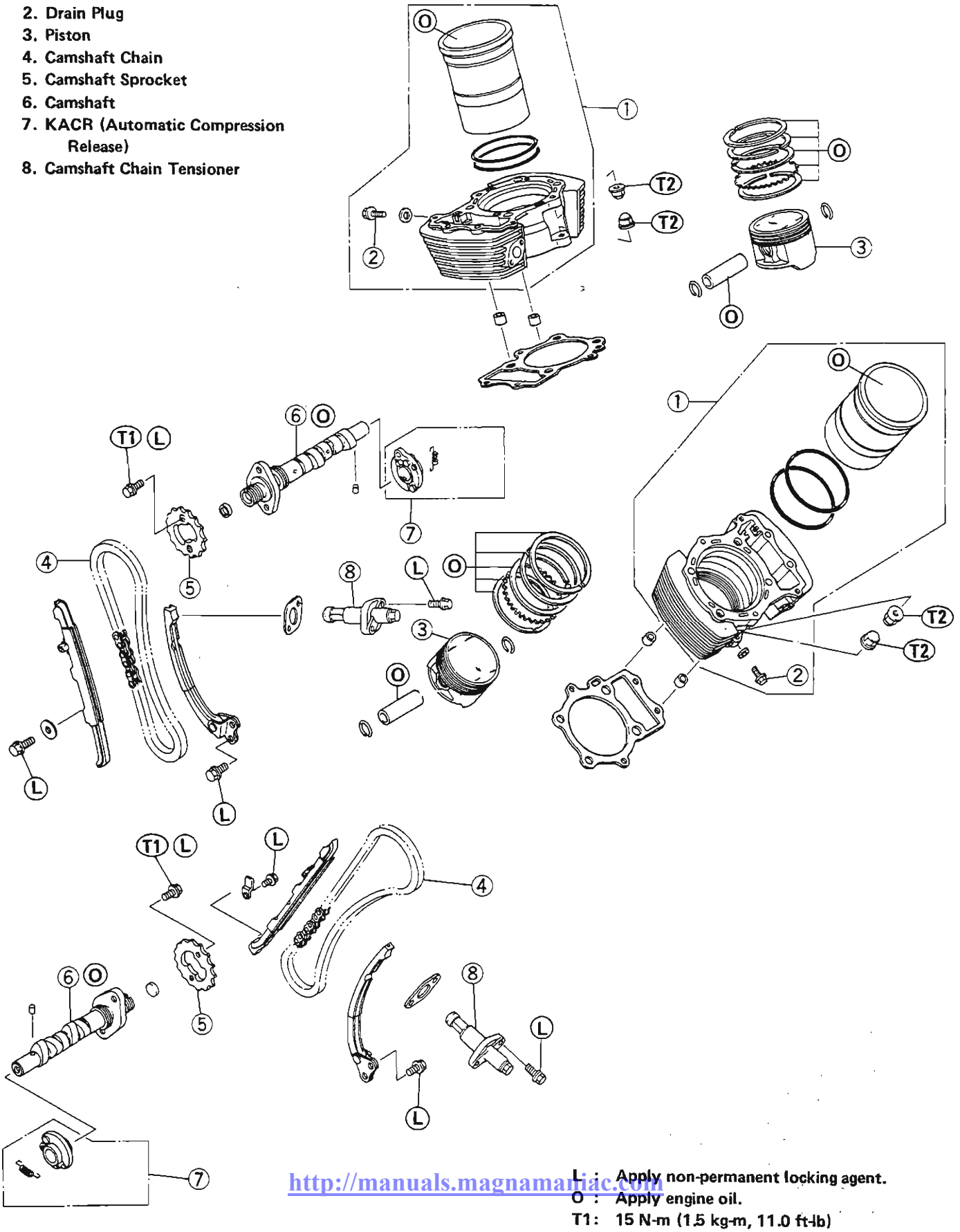

http://manuals.magnamaniac.com

L : Apply non-permanent locking agent.
O : Apply engine oil.
T1 : 15 N-m (1.5 kg-m, 11.0 ft-lb)
T2 : 25 N-m (2.5 kg-m, 18.0 ft-lb)

1. Nut
2. Exhaust Pipe Holder
3. Exhaust Gasket
4. Exhaust Pipe (Left)
5. Exhaust Pipe (Right)
6. Gasket
7. Power Chamber
8. Muffler (Left)
9. Muffler (Right)

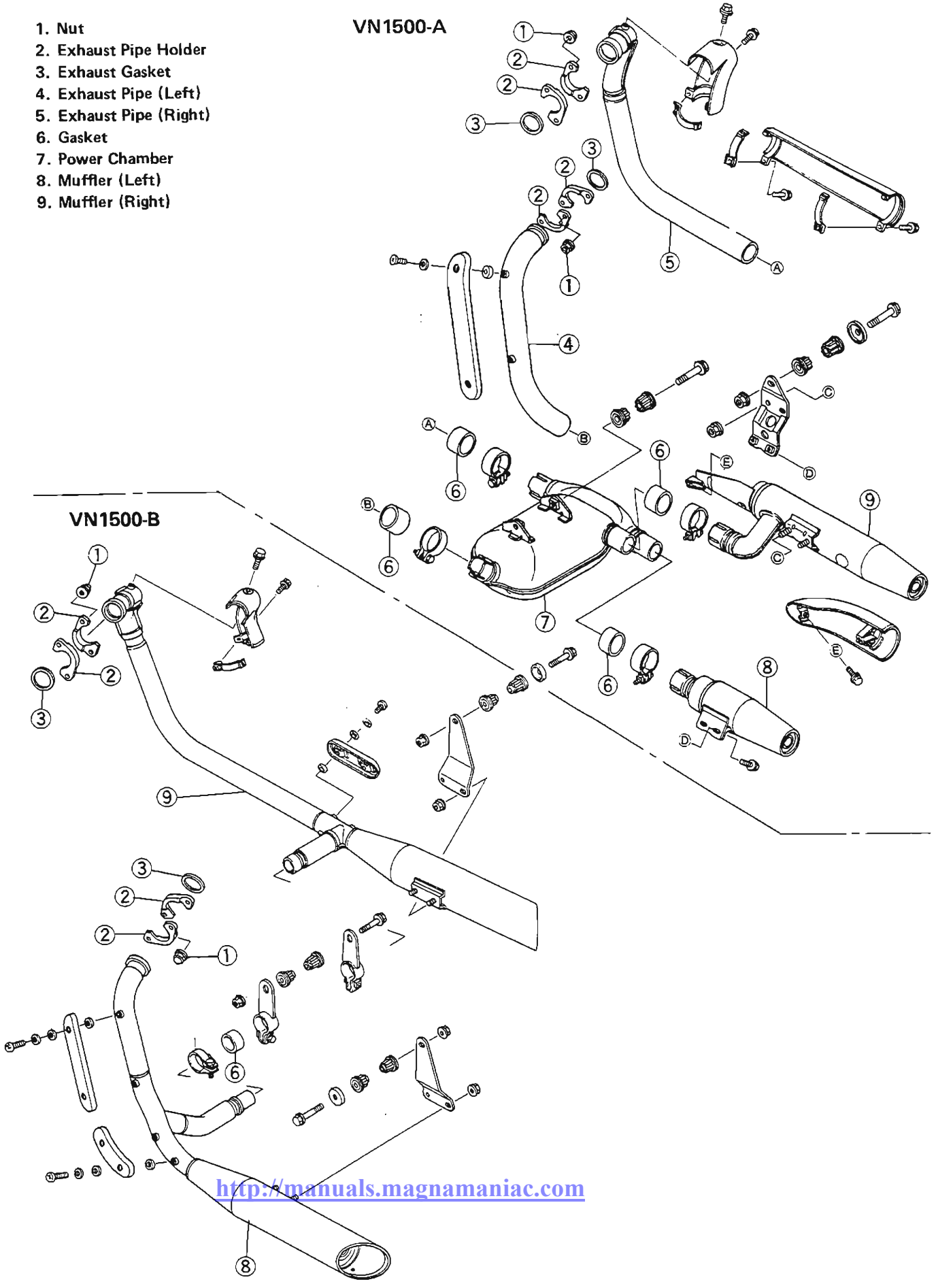

http://manuals.magnamaniac.com

Specifications

Item		Standard	Service Limit
Clean Air System (US and Switzerland models):			
Vacuum switch valve closing pressure: Open → Close		35 – 43 kPa (260 – 320 mmHg)	– – –
Camshaft, Camshaft Chain:			
Cam height:	Inlet	33.812 – 33.912 mm	33.71 mm
	Exhaust	33.494 – 33.594 mm	33.39 mm
Camshaft, rocker case clearance		0.020 – 0.062 mm	0.15 mm
Camshaft journal diameter		24.959 – 24.980 mm	24.93 mm
Camshaft bearing inside diameter		25.000 – 25.021 mm	25.08 mm
Camshaft chain 20-link length		127.0 – 127.4 mm	128.9 mm
Cylinder Head:			
Cylinder compression pressure usable range @300 r/min (rpm) by electric starter		Front cylinder: 345 ~ 590 kPa (3.5 ~ 6 kg/cm², 50 ~ 85 psi) Rear cylinder: 685 ~ 1080 kPa (7.0 ~ 11 kg/cm², 110 ~ 156 psi)	– – –
Cylinder head warp		– – –	0.05 mm
Valves:			
Valve clearance		Non-adjustable	
Valve head thickness:	Inlet & Exhaust	1.0 mm	0.5 mm
Valve stem bend		0.02 mm TIR	0.05 mm TIR
Valve stem diameter:	Inlet	6.965 – 6.980 mm	6.95 mm
	Exhaust	6.955 – 6.970 mm	6.94 mm
Valve guide inside diameter		7.000 – 7.015 mm	7.08 mm
Valve/valve guide clearance (Wobble method):	Inlet	0.05 – 0.12 mm	0.27 mm
	Exhaust	0.08 – 0.16 mm	0.30 mm
Valve spring free length:	Inner	37.8 mm	36.2 mm
	Outer	42.3 mm	40.7 mm
Valve seating surface:			
Width		0.5 – 1.0 mm	– – –
Outside diameter:	Inlet	31.9 – 32.1 mm	– – –
	Exhaust	28.9 – 29.1 mm	– – –
Valve seat cutting angle:	Inlet & Exhaust	32°, 45°, 55°	– – –
Cylinder, Pistons:			
Cylinder inside diameter		102.000 – 102.012 mm	102.10 mm
Piston diameter		101.942 – 101.957 mm	101.79 mm
Piston/cylinder clearance		0.043 – 0.070 mm	– – –
Oversize, piston and rings		+0.5 mm	– – –
Piston ring/groove clearance:			
	Top	0.03 – 0.07 mm	0.17 mm
	Second	0.02 – 0.06 mm	0.16 mm
Piston ring thickness:	Top	0.97 – 0.99 mm	0.90 mm
	Second	1.17 – 1.19 mm	1.10 mm
Piston ring groove width:	Top	1.02 – 1.04 mm	1.12 mm
	Second	1.21 – 1.23 mm	1.31 mm
Piston ring end gap:	Top	0.3 – 0.4 mm	0.7 mm
	Second	0.40 – 0.55 mm	0.9 mm
	Oil	0.3 – 0.9 mm	1.2 mm

http://manuals.magnamaniac.com

Valve Head

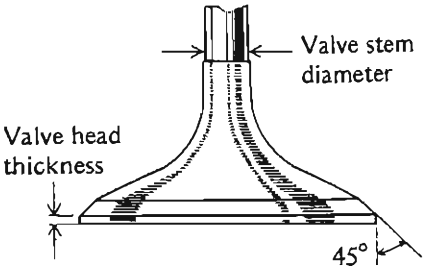

Valve Stem Bend

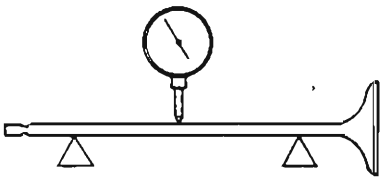

Cam Height Measurement

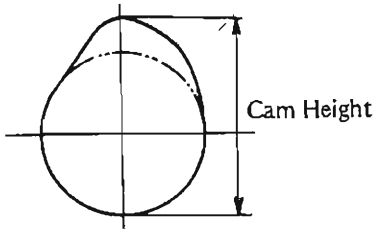

Special Tools

Valve Spring Compressor Assembly: 57001-241
Adapter: 57001-242

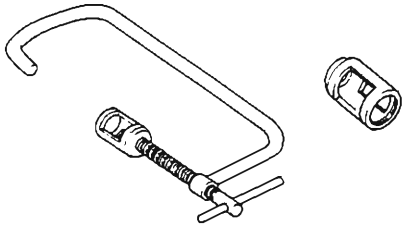

Piston Pin Puller Assembly: 57001-910
Adapter: 57001-1211

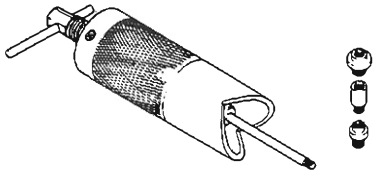

Valve Seat Cutter 45°-φ35: 57001-1116
Valve Seat Cutter 32°-φ35: 57001-1121
Valve Seat Cutter 32°-φ38.5: 57001-1122
Valve Seat Cutter 55°-φ35: 57001-1247



Valve Guide Reamer: 57001-162



Valve Guide Arbor: 57001-163

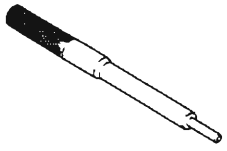

Valve Seat Cutter Holder: 57001-1126

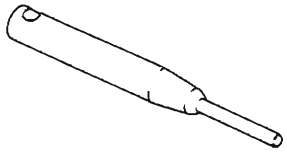

Bar: 57001-1128

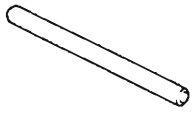

Hexagonal Wrench: 57001-1210

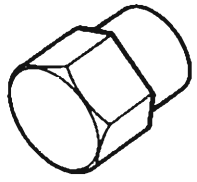

Sealant

Kawasaki Bond (Silicone Sealant): 56019-120

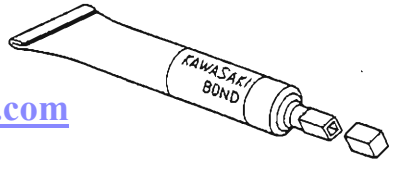

http://manuals.magnamaniac.com

Clean Air System (US and Switzerland models)

Air Suction Valve Inspection

●Visually inspect the reeds for cracks, folds, warps, heat damage, or other damage.

★If there is any doubt as to the condition of the reed, replace the air suction valve as an assembly.

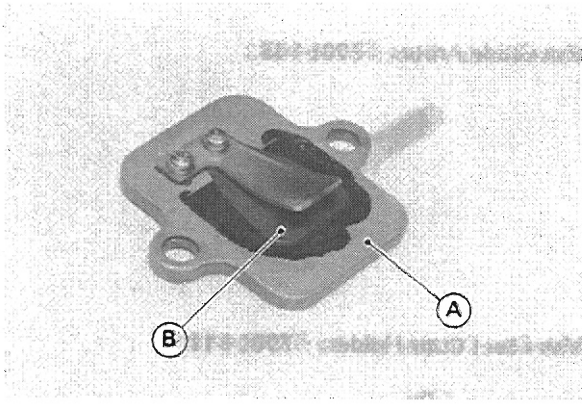

A. Valve Holder B. Reed

●Check the reed contact areas of the valve holder for grooves, scratches, any signs of separation from the holder, or heat damage.

★If there is any doubt as to the condition of the reed contact areas, replace the air suction valve as an assembly.

●If any carbon or other foreign particles have accumulated between the reed and the reed contact area, wash the valve assembly clean with high flash-point solvent.

CAUTION

○**Do not scrape off the deposits with a scraper as this could damage the rubber, requiring replacement of the suction valve assembly.**

Vacuum Switch Valve Test

●Check the vacuum switch valve by blowing air into the air hose fitting.

○When the vacuum applied to the vacuum hose fitting of the valve is low, the vacuum switch valve is opened and air flows through the air hose fittings.

○When the vacuum rises gradually and reaches a certain level, the valve is closed and air does not flow.

★If the vacuum switch valve does not operate as described, replace the valve.

Vacuum Switch Valve Operation

1. During Cruising (Open Throttle)

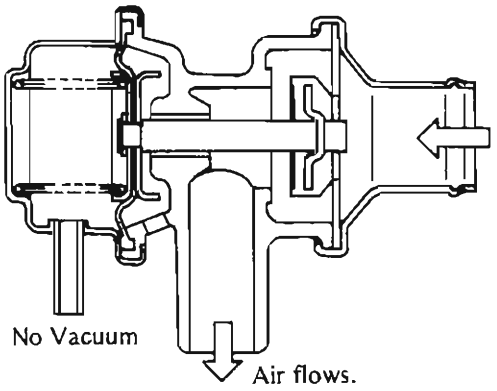

2. During Engine Braking

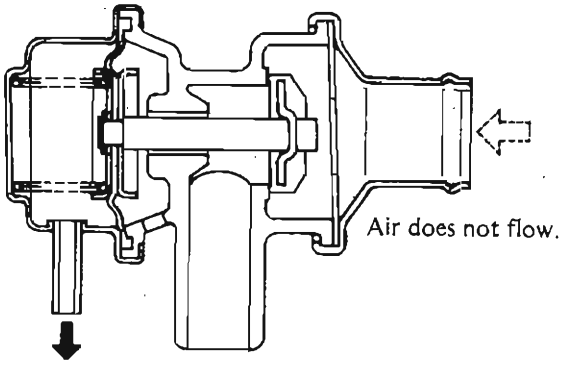

Vacuum Switch Valve Closing Pressure

Open → Close: 35 – 43 kPa (260 – 320 mmHg)

Camshaft Chain Tensioner

Removal

●Remove the camshaft chain tensioner cap bolt and take off the copper washer and the spring.

●Remove the mounting bolts and take off the camshaft chain tensioner.

http://manuals.mageminc.com

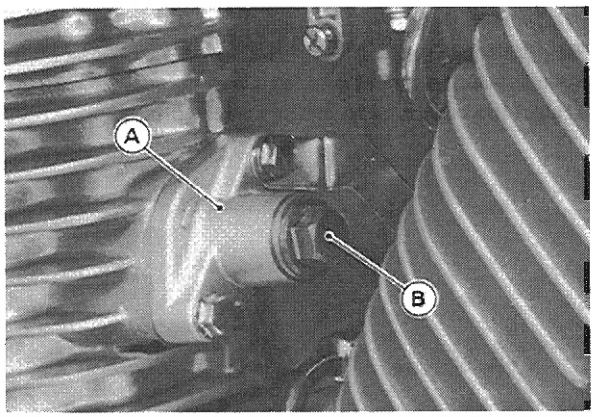

A. Chain Tensioner B. Cap Bolt

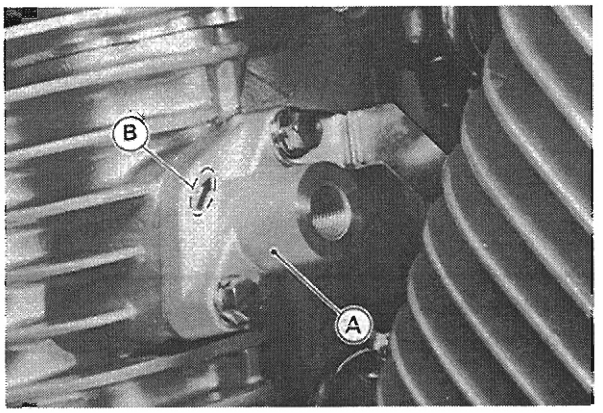

A. Tensioner Body B. Arrow Mark

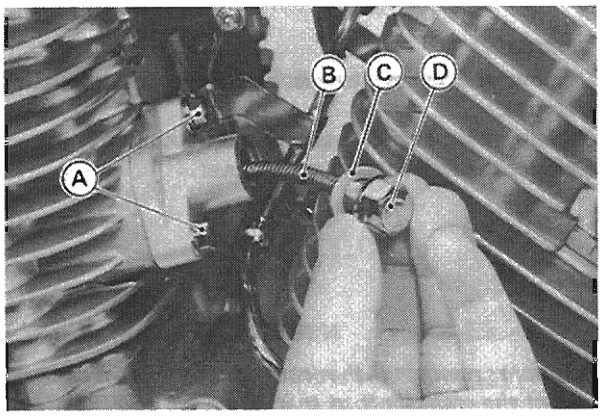

A. Mounting Bolts C. Copper Washer
B. Spring D. Cap Bolt

CAUTION

This is a non-return type cam chain tensioner. The push rod does not return to its original position once it moves out to take up cam chain slack. Observe all the rules listed below:

○When removing the tensioner, do not take out the mounting bolts only halfway. Retightening the mounting bolts from this position could damage the tensioner and the camshaft chain. Once the bolts are loosened, the tensioner must be removed and reset as described in "Chain Tensioner Installation."

○Do not turn over the crankshaft while the tensioner is removed. This could upset the cam chain timing, and damage the valves.

○Release the stopper and push into the rod.

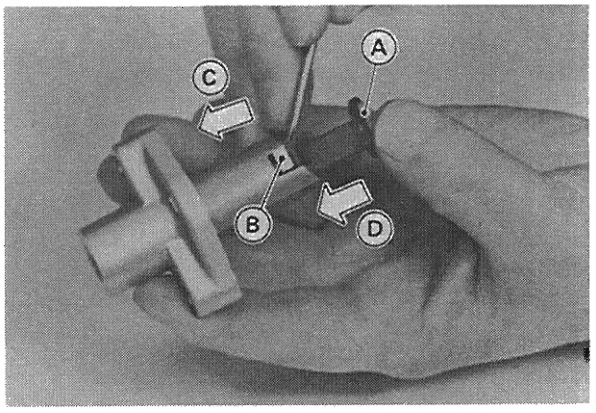

A. Push Rod C. Push
B. Stopper D. Push into the rod.

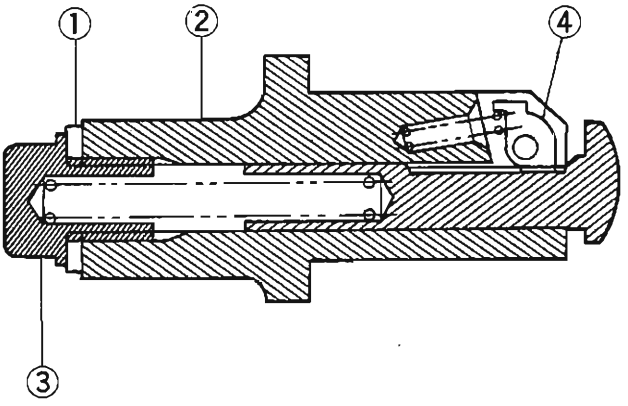

1. Gasket 3. Cap Bolt
2. Chain Tensioner 4. Stopper

Installation

●Installation is the reverse of removal. Note the following.

○Install the tensioner body with the arrow on it pointing upwards.

http://manuals.magnamaniac.com

○Tighten the tensioner mounting bolts to the specified torque (see Exploded View).
○Tighten the cap bolt to the specified torque (see Exploded View).

Rocker Case Cap

Removal

●Remove the engine (see Engine Removal/Installation chapter).
●Remove the bolts and take off the cover from the rocker case.
●Remove the bolts and take the cap from the rocker case.

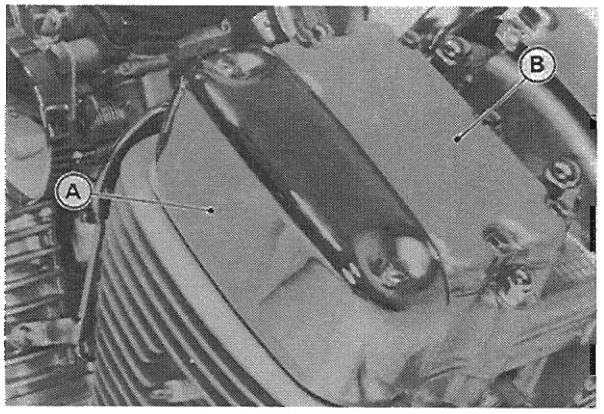

A. Rocker Case Cover B. Rocker Case Cap

●Take out the oil filter springs and oil filters if necessary.

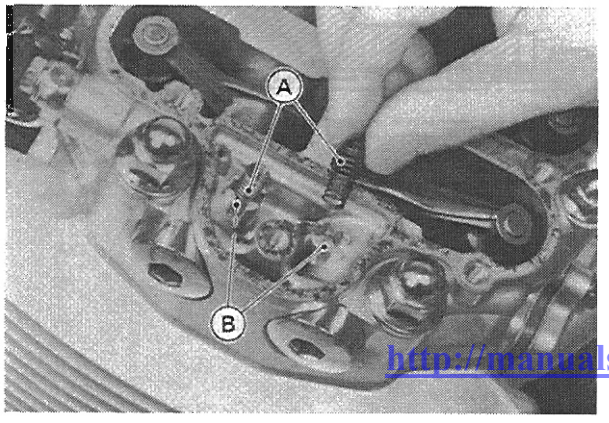

A. Springs B. Oil Filters

Installation

●Note the following.
○Replace the cap gasket with a new one.
○Tighten the cap bolts to the specified torque.

Rocker Shafts, Rocker Arms, Rocker Case

Removal

●Remove the engine (see Engine Removal Installation chapter).
●Remove the rocker case covers and the cap.
●Remove the alternator outer cover.

NOTE

○*Before removing the rocker shaft or rocker arm, turn the crankshaft so that its piston is at TDC of the compression stroke.*

●Remove the oil pipe banjo bolt.
●Remove the water pipe.
●Remove the camshaft chain tensioner (see Camshaft Chain Tensioner Removal).

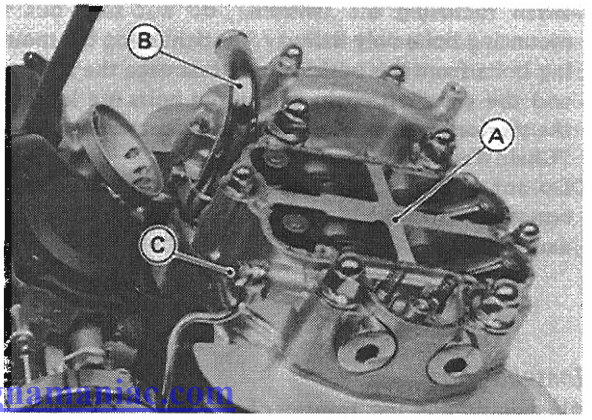

A. Rocker Case C. Oil Pipe Banjo Bolt
B. Water Pipe

http://manuals.magnamanic.com

●Remove the rocker case bolts and nuts.
●Using the pry points, take the rocker case out of the cylinder head.

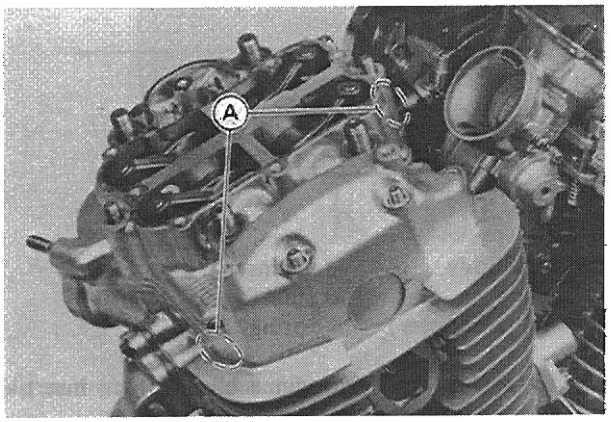

A. Pry Points

●Remove the rocker shafts and take the rocker arms out of the rocker case.

NOTE

○*The camshaft chain tunnel side exhaust rocker arm is different from the others.*

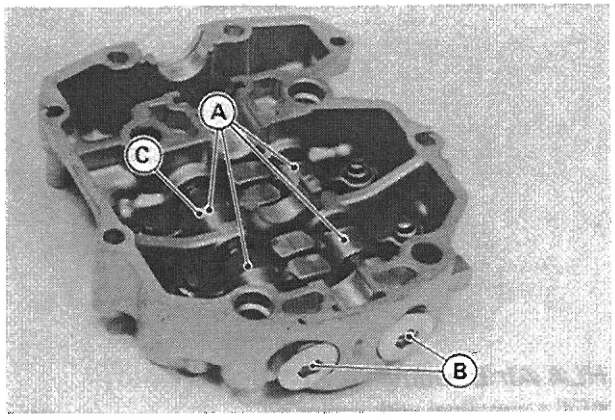

A. Rocker Arms
B. Rocker Shafts
C. Different Rocker Arm

●Take out the oil filters if necessary.
●Remove the lash adjuster if necessary (see HLA Removal).

Installation

●Note the following.
○Install the rocker arms and retainer springs on each rocker shaft as shown.

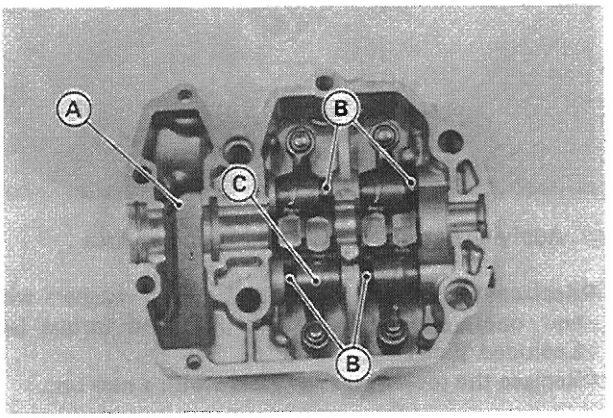

A. Camshaft Chain Tunnel
B. Springs
C. Different Rocker Arm

○Before installing the rocker shaft, be sure the O-rings are in place.
○Tighten the rocker shafts to the specified torque (see Exploded View).
○Apply silicone sealant to the mating surface of the rocker case and the camshaft oil seal.
○Apply engine oil to the both sides of rocker case Nut Washers.
○Fit the rocker case to the cylinder head while holding up the lash adjuster end of the rocker arms.
○Tighten the rocker case bolts and nuts temporarily following the tightening sequence, and then torque them to the specified torque.

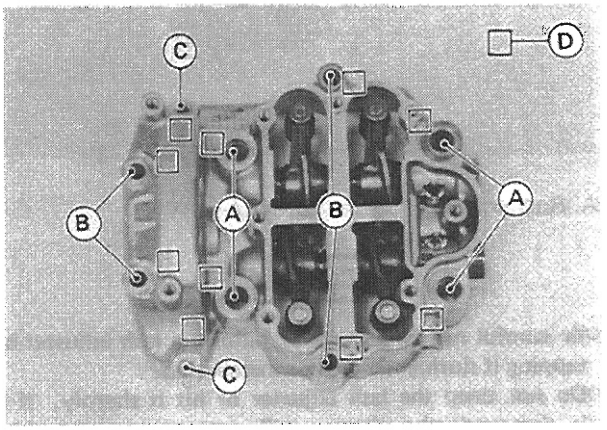

A. ϕ12 mm Nuts
B. ϕ8 mm Bolts
C. ϕ6 mm Bolts
D. Number of Tightening Sequence

http://manuals.magnamaniac.com

○After installing the rocker case, fill the oil chamber with engine oil.

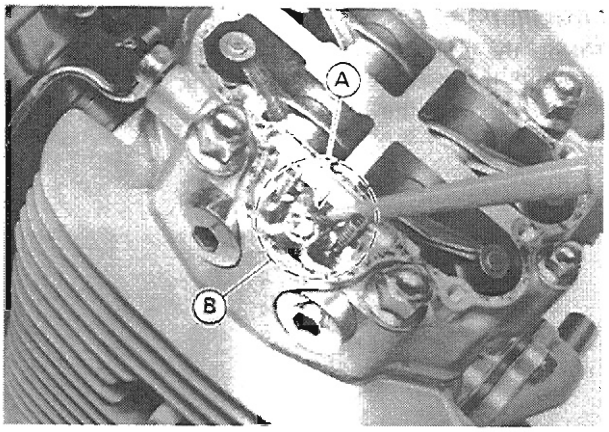

A. Apply engine oil. B. Oil Chamber Area

○Replace the oil pipe banjo bolt copper washers with new ones, and tighten to the specified torque (see Exploded View).
○Replace the rocker case cap gasket with a new one.

HLA (Hydraulic Lash Adjuster)

HLA Removal

●Remove the rocker case.
●Remove the rocker arms.
●Pull the HLA out of the rocker arms.

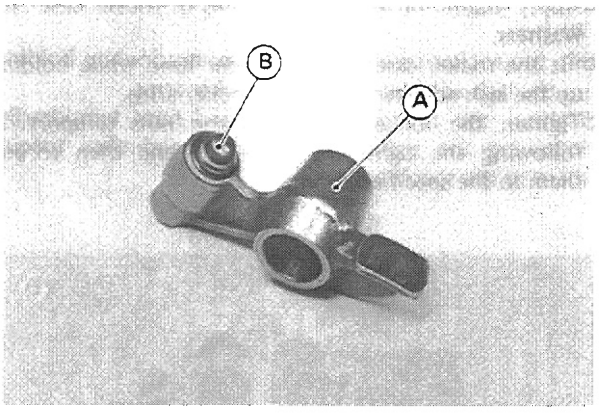

A. Rocker Arm B. HLA

CAUTION

○Be careful not to damage or deform a lash adjuster by tapping it during removal or installation.
○Do not drop the lash adjuster or hit it sharply. If it is damaged, the plunger will not operate smoothly.

HLA Installation

●Note the following.
○Check that the HLA plunger is not damaged.
☆If the plunger does damage, replace the HLA.

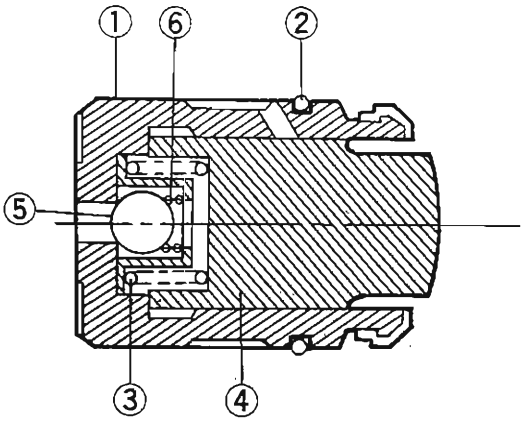

1. HLA Body
2. O-ring
3. Spring (Plunger)
4. Plunger
5. Steel Ball
6. Spring (Ball)

○Fill a rocker arm with engine oil and then insert the HLA into the rocker arm.

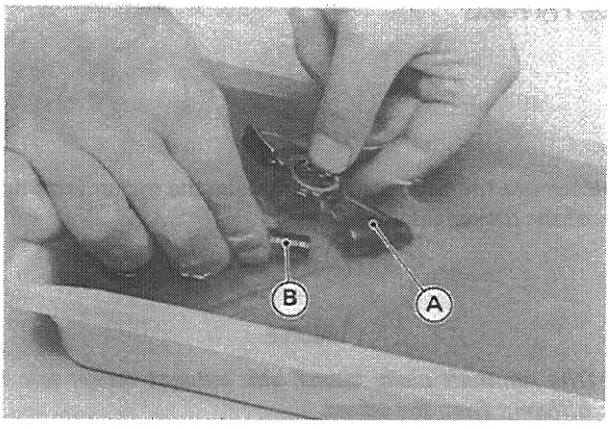

A. Rocker Arm B. HLA

HLA Air Bleeding

●Fill a container with engine oil.
●Prepare a pin and cut the needle of it to 2.1 ~ 2.3 mm length. Grind the cutting edge of the needle to smooth it.
●Push in the steel ball of the HLA with the needle of the pin and move the plunger up and down in the oil bath.

CAUTION

○Do not push in the steel ball more than 2.1 ~ 2.3 mm. Over-stroke of the steel ball may cause the damage of the HLA.

http://manuals.magnamaniac.com

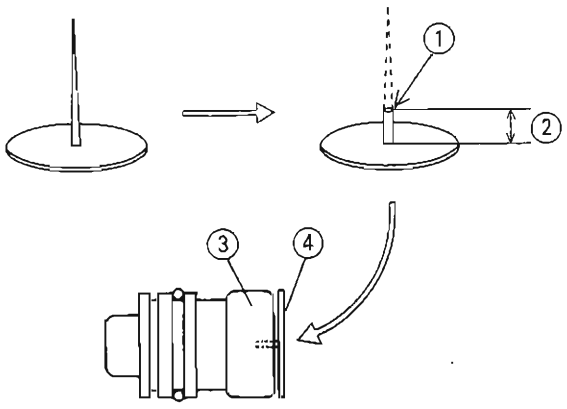

1. Cut and grind the needle.
2. 2.1 ~ 2.3 mm
3. HLA
4. Pin

Inspection

●Remove the rocker arm.
●Pull the HLA out of the rocker arm.
●Press the plunger of the HLA with your fingers.
★If the plunger is into the HLA body, repeat the air bleeding operation and then press the plunger.
☆If the plunger is into the HLA body again, replace the HLA.

Camshafts

Removal

●Remove the rocker case cap.
●Remove the rocker case.
●Remove the camshaft with the KACR and separate it.
○Remove the camshaft oil seal.

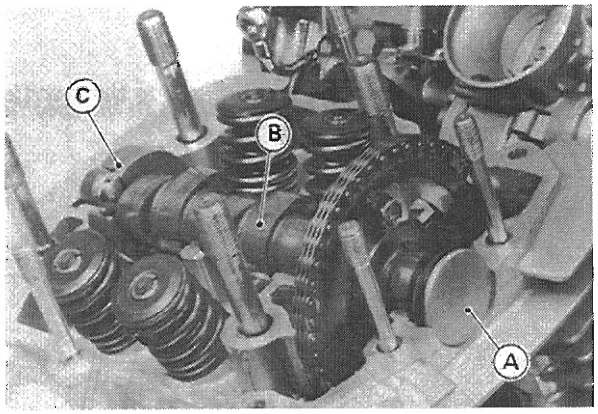

A. Oil Seal
B. Camshaft
C. KACR

Installation (Including Chain Timing Procedure)

●Note the following.
○The front and rear camshafts are different. The rear camshaft has a groove.

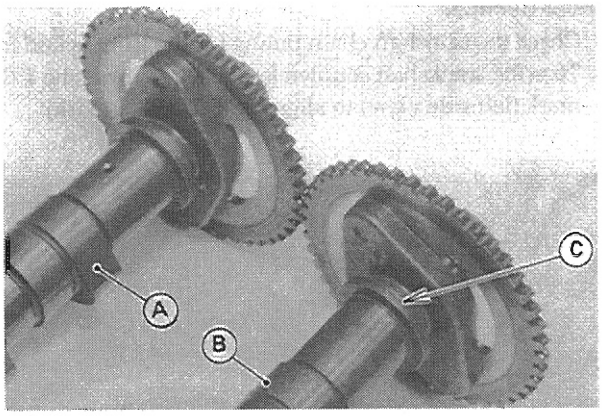

A. Front Camshaft
B. Rear Camshaft
C. Groove

○Apply clean engine oil to all cam parts and journals.
○Fit the KACR Unit on to the camshaft.

Front Cylinder

○Position the crankshaft at front cylinder piston TDC.

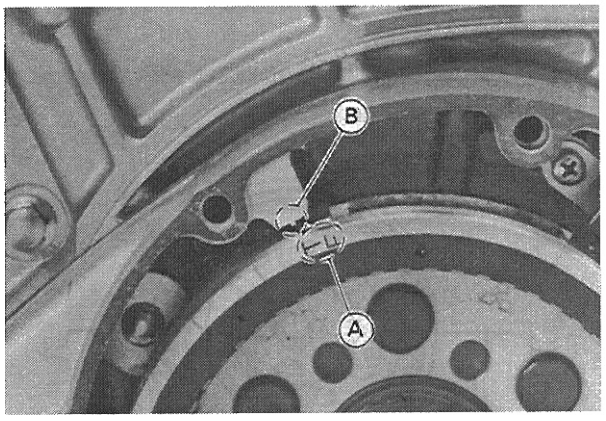

A. TDC Mark (Front Cylinder)
B. Timing Mark

○Engage the camshaft chain sprocket with the camshaft chain as shown.

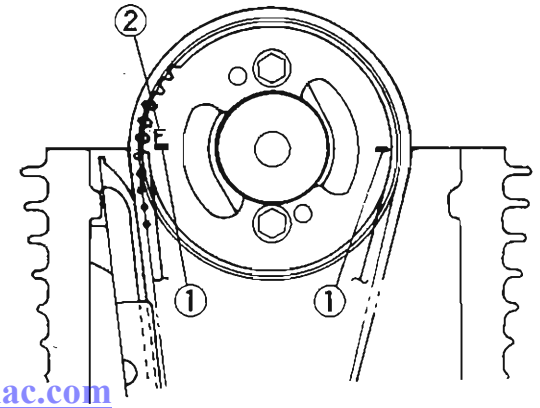

1. Timing Marks
2. F mark

http://manuals.magnamaniac.com

Rear Cylinder

○Check the camshaft chain timing for the front cylinder.

○Turn the crankshaft counterclockwise 310° from the T/F mark (left side view) to align the T/R (TDC mark).

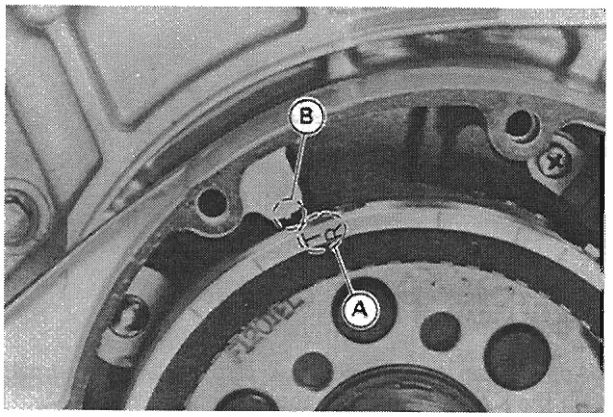

A. TDC Mark (Rear Cylinder) B. Timing Mark

○Engage the camshaft chain sprocket with the camshaft chain as shown.

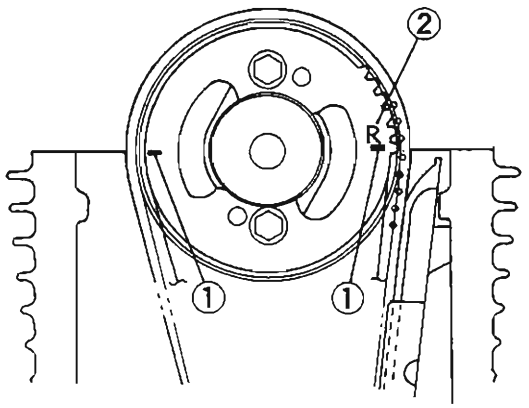

1. Timing Marks
2. R Mark

CAUTION

○The crankshaft may be turned while the camshaft is removed, but always pull the chain taut while turning the crankshaft. This avoids kinking the chain on the lower (crankshaft) sprocket. A kinked chain could damage both the chain and the sprocket.

Camshaft Sprocket Assembly

●Note the following.

○Use the sprocket marked **F** for the front cylinder camshaft and **R** for the rear cylinder camshaft.

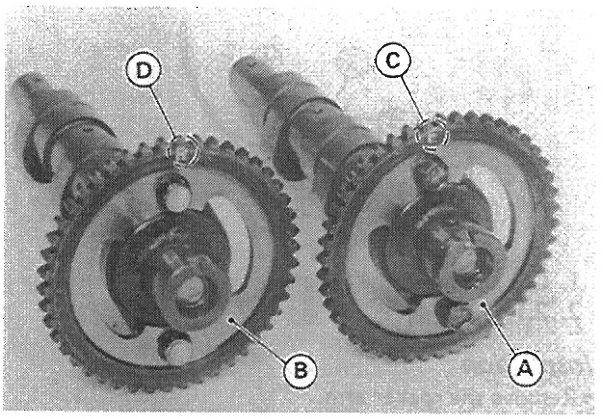

A. Front Camshaft Sprocket C. **F** Mark
B. Rear Camshaft Sprocket D. **R** Mark

○Apply a non-permanent locking agent to the camshaft sprocket bolts and tighten them to the specified torque (see Exploded View).

○If the camshafts are replaced with new ones, apply a thin coat of a molybdenum disulfide grease to all cam parts and journals.

Camshaft, Rocker Case Wear

●Note the following.

○Measure each clearance between the camshaft and the rocker case using plastigage (press gauge).

NOTE

○*Tighten the rocker case bolts and nuts to the specified torque (see Exploded View).*

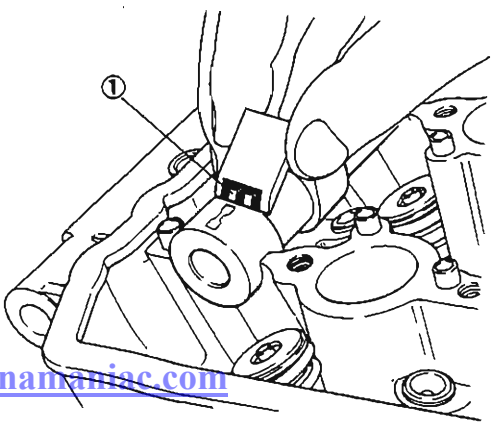

1. Plastigage Width

http://manuals.magnamaniac.com

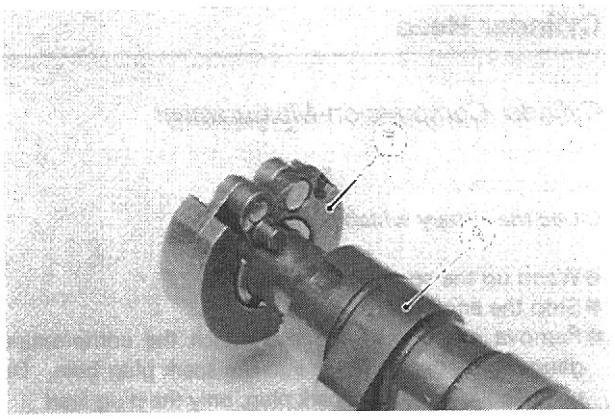

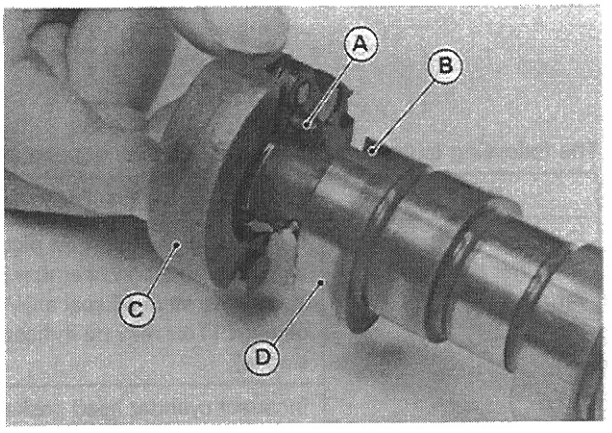

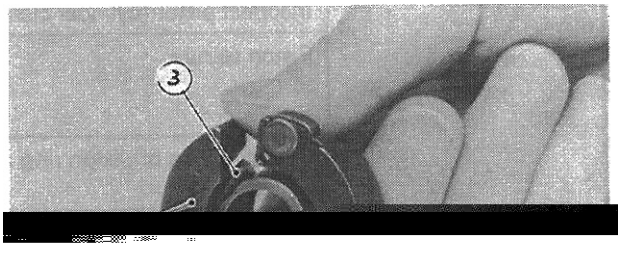

http://manuals.magnamaniac.com

http://manuals.magnamaniac.com

http://manuals.magnamaniac.com

http://manuals.magnamaniac.com

http://manuals.magnamaniac.com

http://manuals.magnamaniac.com

http://manuals.magnamaniac.com

http://manuals.magnamaniac.com

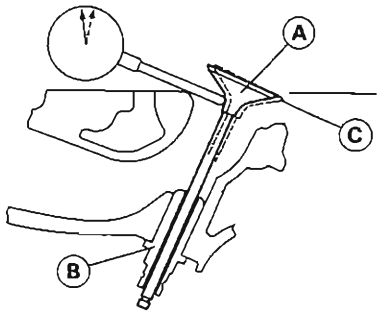

New Valve [A]
Valve Guide [B]
Move the Valve [C]

Cylinders, Pistons

Cylinder Removal

- Remove the cylinder head.
- Pull out the camshaft chain guide (inlet side).
- Remove the coolant drain plug to drain the coolant.

A. Drain Plug
B. Cylinder Nut
C. Camshaft Chain Guide

- Remove the cylinder nuts.
- Take the cylinder off the crankcase.

Cylinder Installation

http://manuals.magnamaniac.com

- Note the following.

○Replace the cylinder base gasket with a new one, and engage the gaskets with the crankcase water holes.

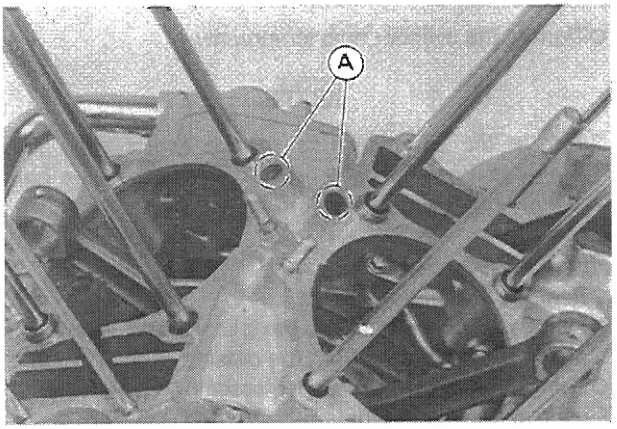

A. Water Holes

○Position the crankshaft at TDC.
○Apply engine oil to the cylinder bore, piston ring, and piston skirt.
○Slip the cylinder block onto the piston.
○Use the cylinder's marked **F** for the front and **R** for the rear.

A. Front Cylinder
B. Rear Cylinder
C. **F** Mark
D. **R** Mark

○The front and rear camshaft chain guides are not identical.
Use the marked **F** for the front cylinder and **R** for the rear cylinder.

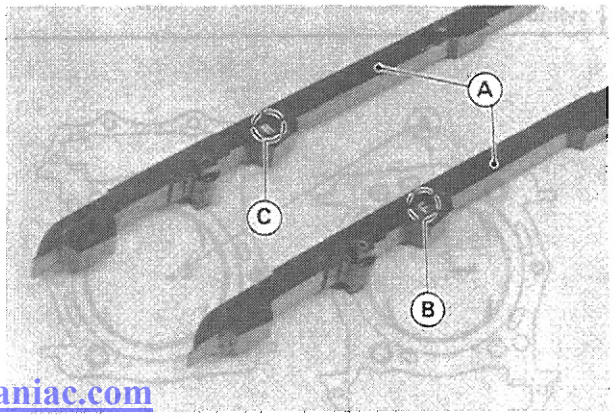

A. Camshaft Chain Guides
B. **F** Mark
C. **R** Mark

○Tighten the cylinder nuts temporarily.

NOTE

○*Torque the cylinder nuts to the specification (see Exploded View) after tightening the rocker case bolts and nuts to the specified torque.*

Piston Removal

●Remove the cylinder block.
●Place a clean cloth under the pistons and remove the piston pin snap rings from the outside of each piston.
○Using the piston pin puller assembly (special tool), remove the piston pins.

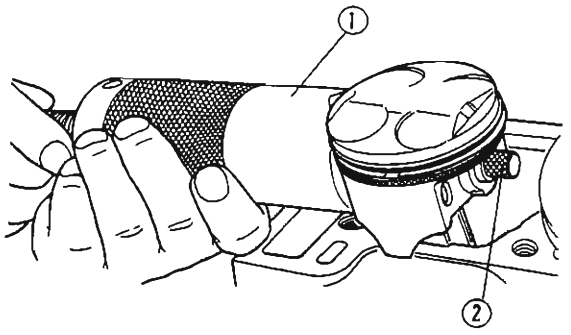

1. Piston Pin Puller Assembly: 57001-910
2. Adapter

Piston Installation

NOTE

○*If a new piston or cylinder is used, check piston to cylinder clearance (see Specifications), and use new piston ring.*

●The arrow [A] on each piston head must point forward.

CAUTION

Do not reuse snap rings, as removal weakens and deforms them. They could fall out and score the cylinder wall.

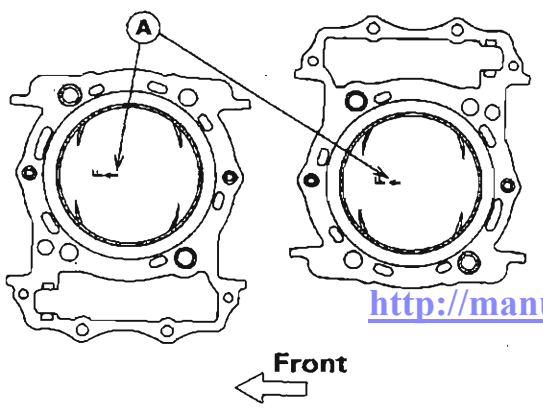

●The piston ring openings must be positioned as shown in the figure. The openings of the oil ring steel rails must be about 30 ~ 45° of angle from the opening of the top ring.

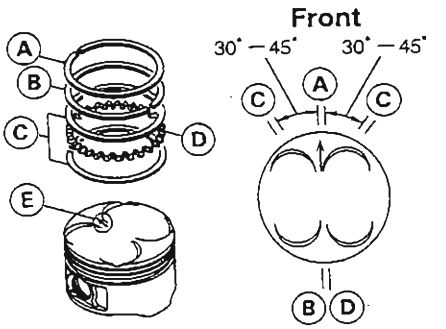

Top Ring [A]
Second Ring [B]
Oil Ring Steel Rails [C]
Oil Ring Expander [D]
Arrow [E]

NOTE

○*The oil ring rails have no "top" or "bottom".*

●Install the oil ring expander [A] in the bottom piston ring groove so the ends [B] but together.
●Install the oil ring steel rails, one above the expander and one below it.
○Spread the rail with your thumbs, but only enough to fit the rail over the piston.
○Release the rail into the bottom piston ring groove.

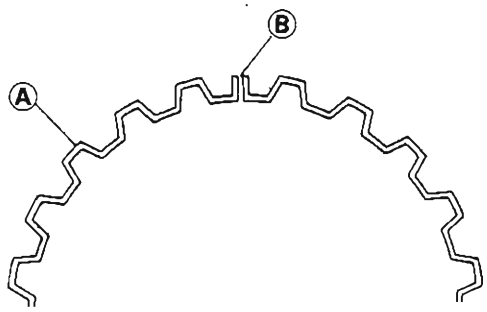

●Do not mix up the top ring and second ring.
●Install the second ring [A] so that the "RN" mark faces up.
●Install the top ring [B] so that the "R" mark faces up.

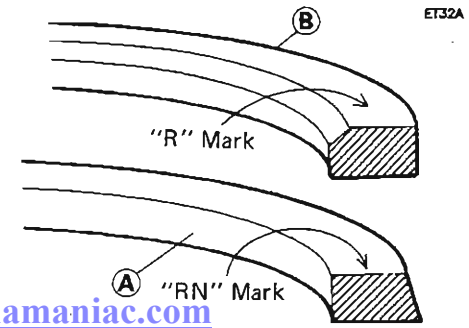

http://manuals.magnamaniac.com

Cylinder Wear

● Measure the cylinder inside diameter taking a side-to-side and a front-to-back measurement at each of the 3 positions (total of 6 measurements) shown below.

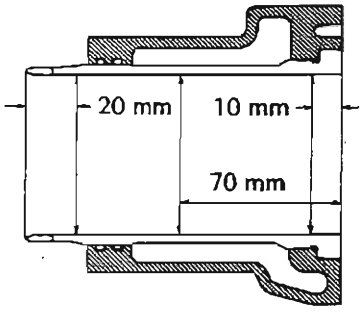

Cylinder Inside Diameter

Standard:	**102.000 – 102.012 mm**
Service Limit:	**102.10 mm**

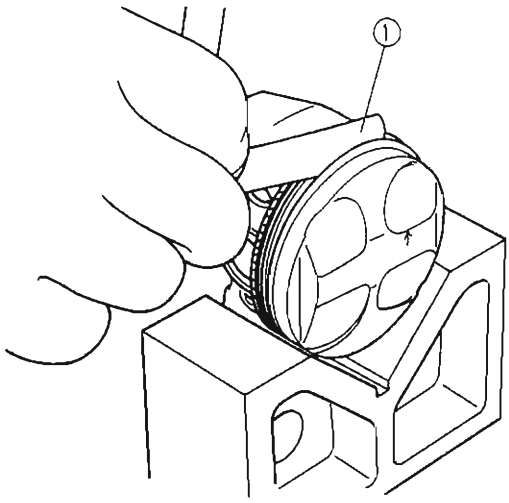

1. Thickness Gauge

Piston Wear

● Measure the piston outside diameter 5 mm up from the bottom of the piston at a right angle to the direction of the piston pin.

Piston Outside Diameter

Standard:	**101.942 – 101.957 mm**
Service Limit:	**101.79 mm**

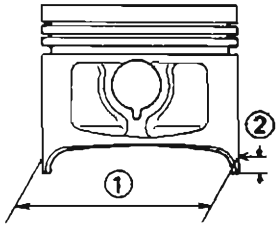

1. Piston Outside Diameter
2. 5 mm up from the bottom

Piston Ring End Gap

● Place the piston ring inside the cylinder, using the piston to locate the ring squarely in place. Set it close to the bottom of the cylinder, where cylinder wear is low.

● Measure the gap between the ends of the ring with a thickness gauge.

Piston Ring End Gap

	Standard	Service Limit
Top	**0.3 – 0.4 mm**	**0.7 mm**
Second	**0.40 – 0.55 mm**	**0.9 mm**
Oil	**0.3 – 0.9 mm**	**1.2 mm**

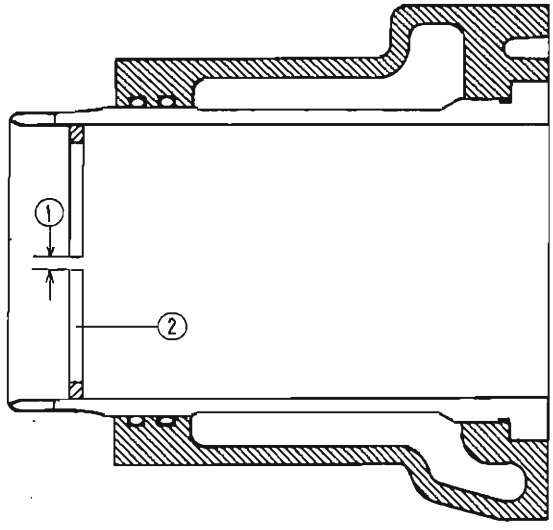

1. Gap
2. Piston Ring

Piston Ring, Piston Ring Groove Wear

● Check for uneven groove wear by inspecting the ring seating.

★ The rings should fit perfectly parallel to the groove surfaces. If not, the piston must be replaced.

● With the piston rings in their grooves, make several measurements with a thickness gauge to determine piston ring/groove clearance.

Piston Ring Groove Clearance

	Standard	Service Limit
Top	**0.03 – 0.07 mm**	**0.17 mm**
Second	**0.02 – 0.06 mm**	**0.16 mm**

http://manuals.magnamaniac.com

Muffler

Removal (for VN1500-A)

●Remove the following.
Front Muffler Cover

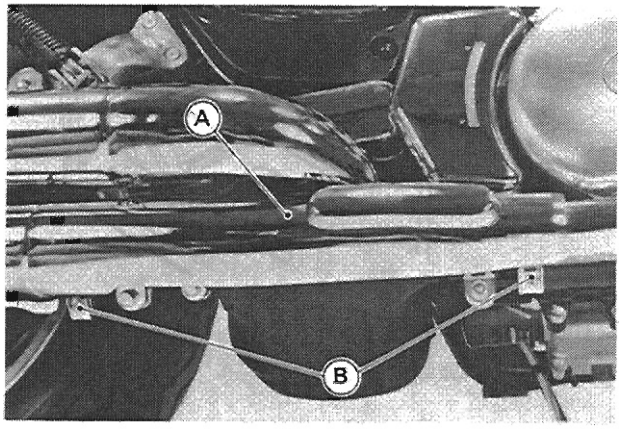

A. Front Muffler Cover B. Screws

Muffler Clamp Bolts (Loosen)
Muffler Bracket Bolt
Muffler Assembly

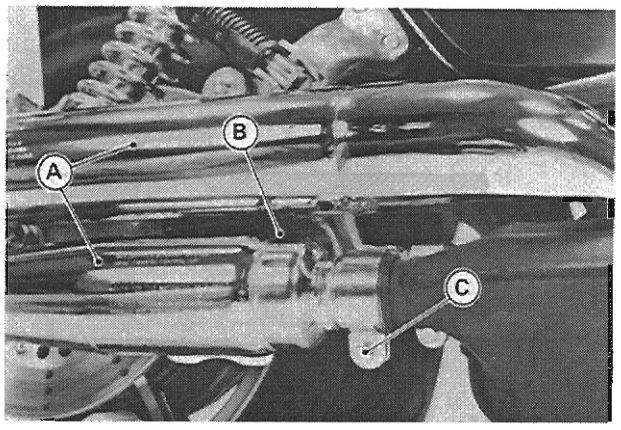

A. Mufflers C. Clamp Bolt
B. Bracket Bolt

Front Exhaust Pipe Cover

●Remove the front exhaust pipe holder nuts and loosen the exhaust pipe clamp bolt.

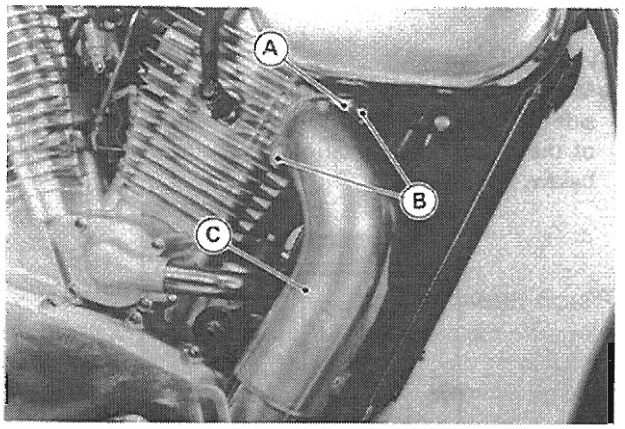

A. Holders C. Exhaust Pipe Cover
B. Nuts

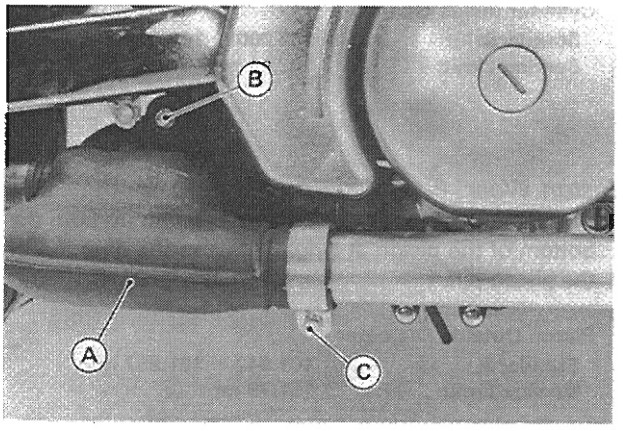

A. Power Chamber C. Clamp Bolt
B. RH Mounting Bolt

●Pull the RH exhaust pipe out of the muffler.
●Remove the power chamber RH mounting bolt.
●Remove the rear exhaust pipe holder nuts, LH power chamber mounting bolt, and loosen the exhaust pipe clamp bolt.

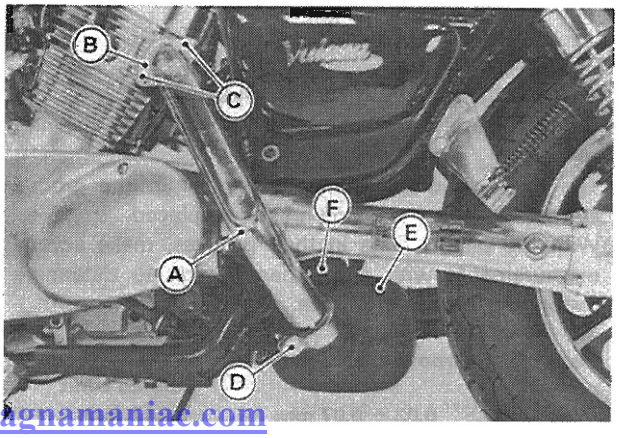

http://manuals.magnamaniac.com

A. Exhaust Pipe D. Clamp Bolt
B. Holder E. Power Chamber
C. Nuts F. Mounting Bolt

●Pull out rear exhaust pipe upper end while supporting the power chamber, then take them out toward the left.
★Separate the front and rear mufflers from the muffler bracket if necessary.

Installation
●Perform the following.
○Replace the exhaust gaskets with new ones.

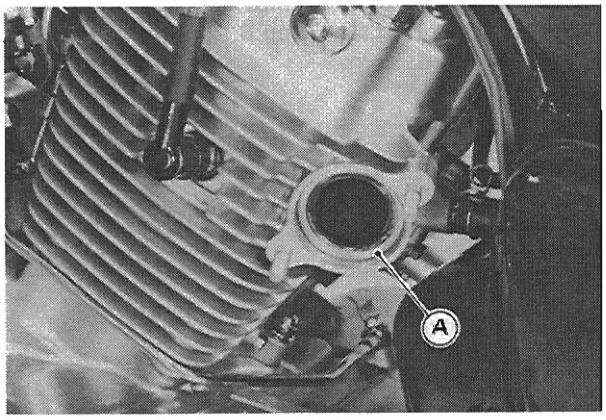

A. Exhaust Gasket

○Attach the rear exhaust pipe to the power chamber, then fit the chamber into the frame bracket.

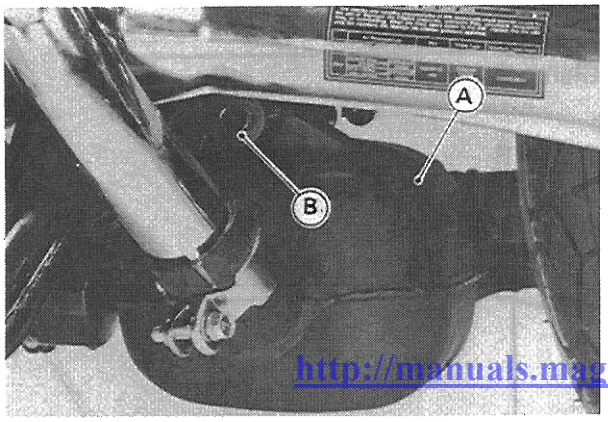

A. Power Chamber B. Bracket

○Fit the rear exhaust pipe upper end while supporting the power chamber.
○Screw the power chamber mounting bolts temporarily.
○Install the rear exhaust pipe holders while pulling the exhaust pipe toward the outside.

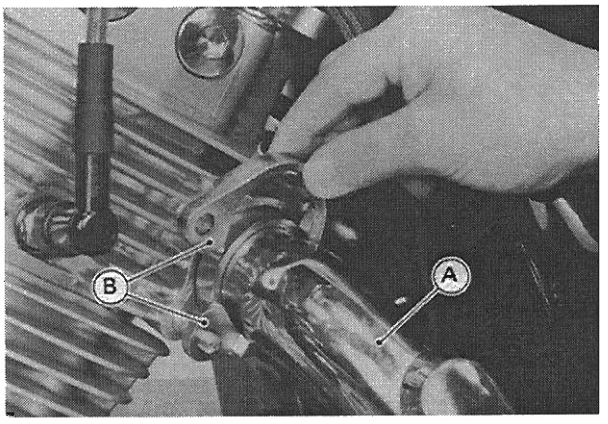

A. Exhaust Pipe B. Holders

○Tighten the holder nuts, power chamber mounting bolts, and exhaust pipe clamp bolt securely.
○Install the front exhaust pipe.
○Install the muffler assembly.
○Install the muffler and exhaust pipe covers.

Removal (for VN1500-B)
●Loosen the muffler clamp bolt.

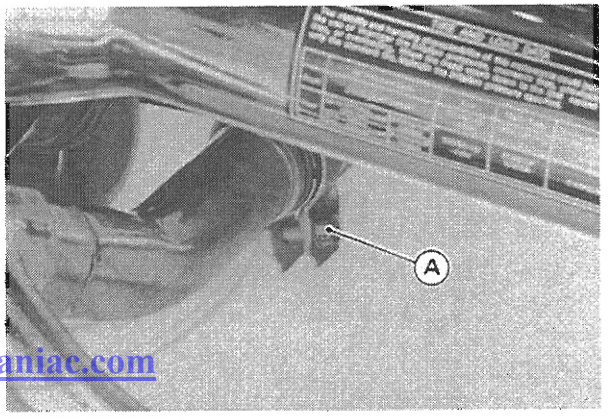

A. Clamp Bolt

http://manuals.magnamaniac.com

●Remove the left side exhaust pipe holder nuts.

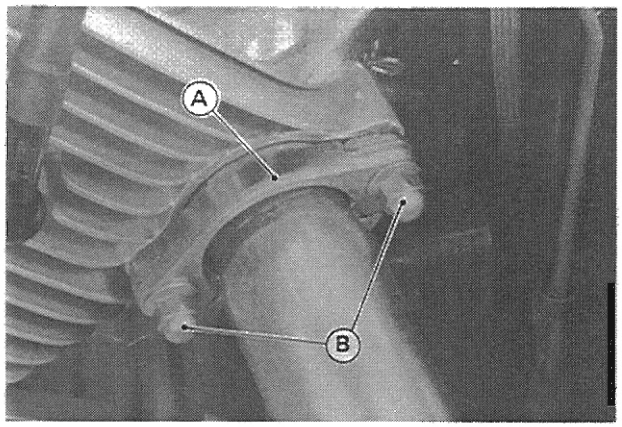

A. Holders B. Holder Nuts

●Remove the left side muffler bracket bolt, and take the muffler out of the frame.

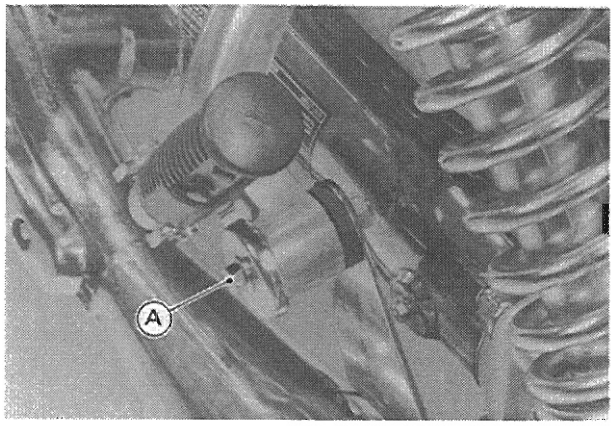

A. Bracket Bolt

●Remove the right side exhaust pipe holder nuts.
●Remove the right side muffler bracket bolt, and take the muffler out of the frame.

Installation

●Replace the exhaust gasket with new ones.
●Perform the following.
○Attach the clamps A and B onto the RH muffler.
○Install the RH exhaust pipe and the holders onto the front cylinder head.
○Install the RH muffler bracket bolt.
○Insert the LH muffler connecting pipe into the RH muffler connecting pipe.
○Install the LH exhaust pipe and the holders onto the rear cylinder head.
○Install the LH muffler bracket bolt.
○Install the clamps A to the frame.
○Tighten the bolts of the clamps A.
○Tighten the bolt of the clamp B.

Muffler Bolts Tightening Order

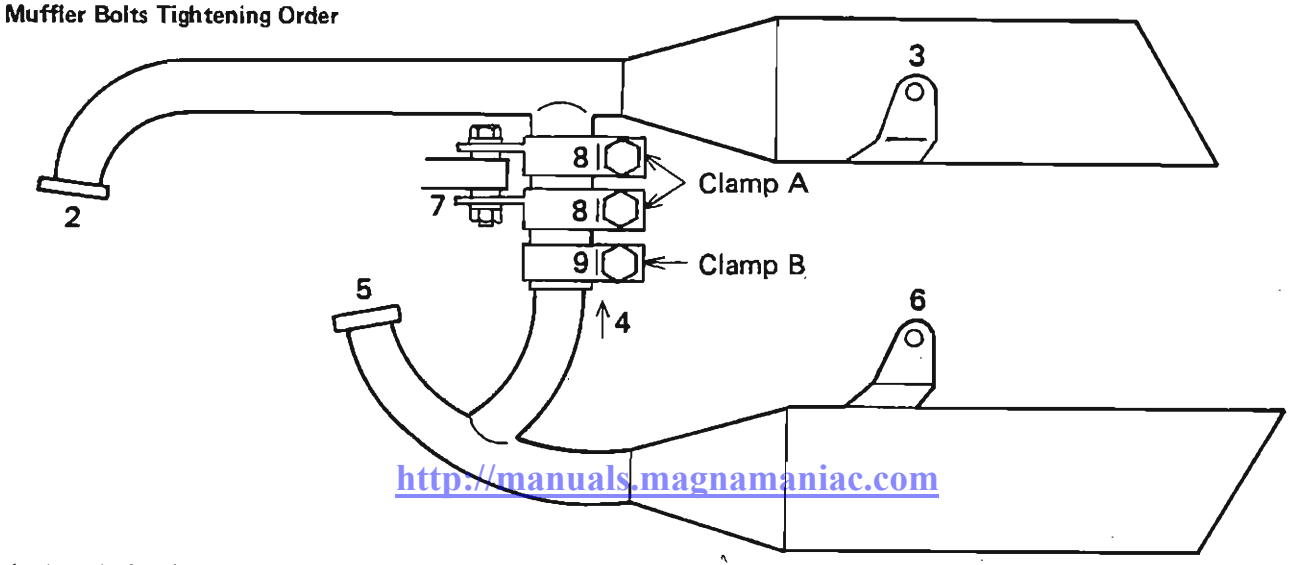

http://manuals.magnamaniac.com

1 : Attach the clamps.

Clutch

Table of Contents

Exploded View 5-2
Specifications 5-3
Special Tool 5-3
Clutch Fluid 5-4
- Fluid Level Inspection 5-4
- Clutch Fluid Changing 5-4
- Bleeding the Clutch Line 5-5

Master Cylinder 5-5
- Installation 5-5
- Disassembly 5-5
- Assembly 5-6
- Inspection 5-6

Clutch Slave Cylinder 5-6
- Removal 5-6
- Installation 5-6
- Disassembly 5-7
- Assembly 5-7

Clutch 5-7
- Removal 5-7
- Installation 5-8
- Clutch Inner Hub Disassembly/Assembly 5-9
- Spring Plate Free Play Measurement 5-10
- Spring Plate Free Play Adjustment 5-10
- Friction Plate Wear, Damage Inspection 5-10
- Friction and Steel Plate Warp Inspection 5-10
- Clutch Housing Finger Inspection 5-11
- Clutch Hub Spline Inspection 5-11
- Cam Damper Inspection 5-11
- Clutch Spring Free Height Measurement 5-11

http://manuals.magnamaniac.com

Exploded View

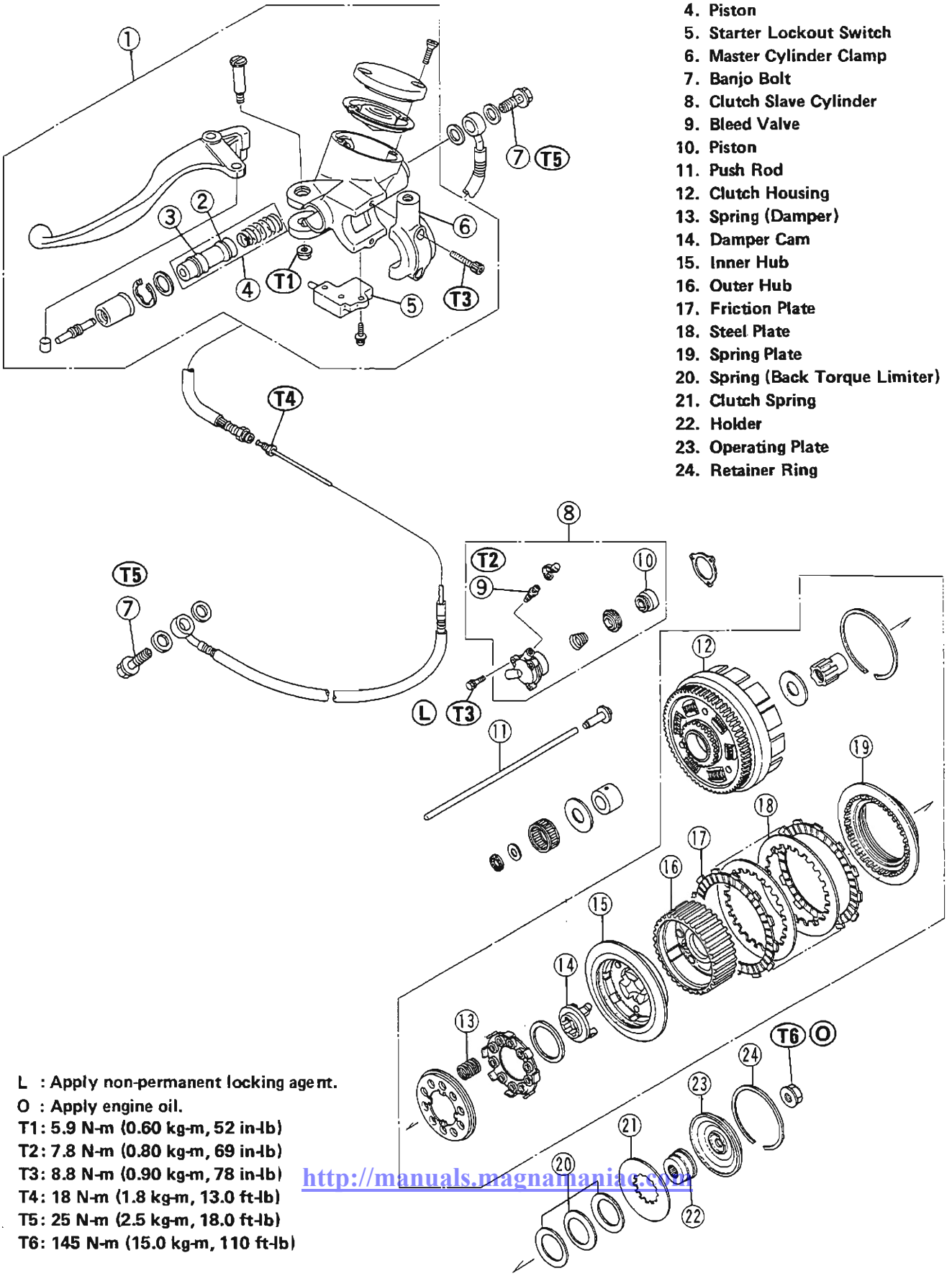

1. Clutch Master Cylinder
2. Primary Cup
3. Secondary Cup
4. Piston
5. Starter Lockout Switch
6. Master Cylinder Clamp
7. Banjo Bolt
8. Clutch Slave Cylinder
9. Bleed Valve
10. Piston
11. Push Rod
12. Clutch Housing
13. Spring (Damper)
14. Damper Cam
15. Inner Hub
16. Outer Hub
17. Friction Plate
18. Steel Plate
19. Spring Plate
20. Spring (Back Torque Limiter)
21. Clutch Spring
22. Holder
23. Operating Plate
24. Retainer Ring

L : Apply non-permanent locking agent.
O : Apply engine oil.
T1: 5.9 N-m (0.60 kg-m, 52 in-lb)
T2: 7.8 N-m (0.80 kg-m, 69 in-lb)
T3: 8.8 N-m (0.90 kg-m, 78 in-lb)
T4: 18 N-m (1.8 kg-m, 13.0 ft-lb)
T5: 25 N-m (2.5 kg-m, 18.0 ft-lb)
T6: 145 N-m (15.0 kg-m, 110 ft-lb)

http://manuals.magnamaniac.com

Specifications

Item	Standard	Service Limit
Recommended Clutch Fluid :		
Grade	D.O.T.4	— — —
Brand	Castrol Girling-Universal Castrol GT (LMA) Castrol Disc Brake Fluid Check Shock Premium Heavy Duty	— — —
Clutch :		
Clutch lever play	Type	— — —
Clutch spring free height	4.7 mm	4.4 mm
Spring plate/pusher clearance	0.05 — 0.25 mm	— — —
Spring plate free play	0.30 — 1.30 mm (Usable range)	— — —
Friction plate thickness	3.3 — 3.5 mm	3.1 mm
Friction and steel plate warp	Less than 0.2 mm	0.3 mm
Primary Reduction :		
Primary gear/clutch housing gear back lash	0.03 — 0.10 mm	0.14 mm

Special Tool

Bearing Driver Set: 57001-1129

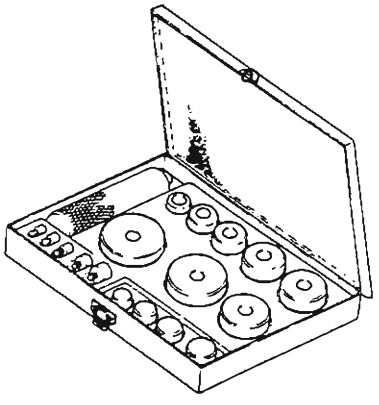

http://manuals.magnamaniac.com

Clutch Fluid

Fluid Level Inspection

●Check the clutch fluid level in the reservoir.

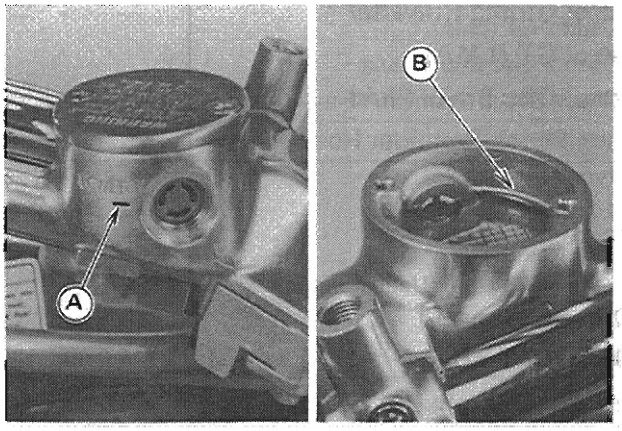

A. Lower Level Line B. Upper Level Line

NOTE

○*Hold the reservoir horizontal when checking clutch fluid level.*

★If the fluid level is lower than the lower level line, fill the reservoir to the upper level line in the reservoir.

WARNING

○**Change the fluid in the clutch line completely if the fluid must be refilled but the type and brand of the fluid that already is in the reservoir are unidentified. After changing the fluid, use only the same type and brand of fluid thereafter. Mixing different types and brands of fluid lowers the fluid boiling point and could cause the clutch to be ineffective. It may also cause the rubber clutch parts to deteriorate.**

Recommended Clutch Fluid

Grade: D.O.T.4 Heavy Duty Brake Fluid
Brand: Castrol Girling-Universal
Castrol GT (LMA)
Castrol Disc Brake Fluid
Check Shock Premium Heavy Duty

NOTE

○*Since the clutch fluid is the same as the brake fluid, refer to Brake Fluid Section in Brakes for further details.*

Clutch Fluid Changing

●Remove the LH engine cover (see Crankshaft/Transmission).
●Remove the reservoir cap, and remove the rubber cap on the bleed valve.
●Attach a clear plastic hose to the bleed valve on the clutch slave cylinder, and run the other end of the hose into a container.
●Fill the reservoir with fresh fluid.
●Change the clutch fluid as follows.

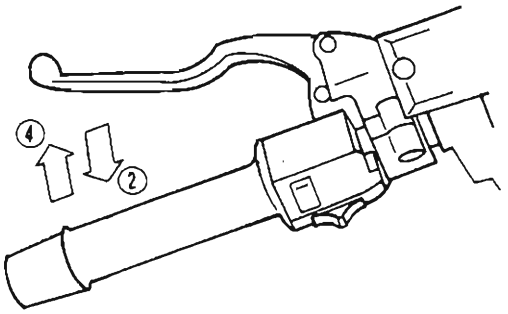

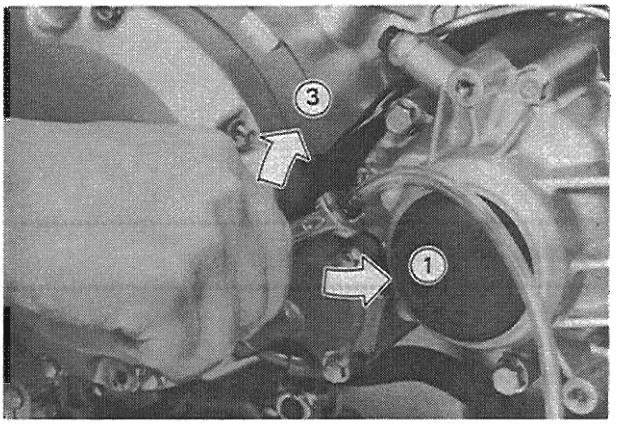

1. Open the bleed valve
2. Pump the clutch lever and hold it.
3. Close the bleed valve.
4. Release the clutch lever.

○Repeat this operation until fresh fluid comes out from the plastic hose or the color of the fluid changes.
○Check the fluid level in the reservoir often, replenishing it as necessary.

NOTE

○*If the fluid in the reservoir runs completely out any time during fluid changing, the bleeding operation must be done over again from the beginning since air will have entered the line.*

http://manuals.magnamaniac.com

WARNING

○**Do not mix two brands of fluid.**

Bleeding the Clutch Line

●With the reservoir cap off, slowly pump the clutch lever several times until no air bubbles can be seen rising up through the fluid from the holes at the bottom of the reservoir. This bleeds the air from the master cylinder end of the line.

NOTE

○*Tap the clutch hose lightly going from the lower end to the upper end and bleed the air off at the reservoir.*

●Attach a clear plastic hose to the bleed valve on the clutch slave cylinder, and run the other end of the hose into a container.

●Bleed the clutch line as follows:

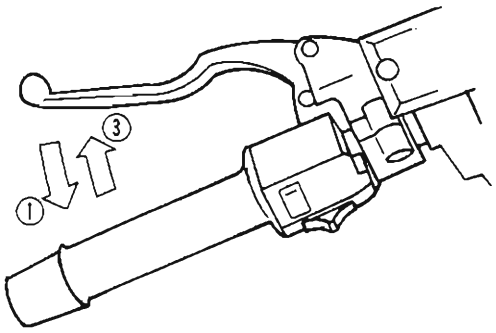

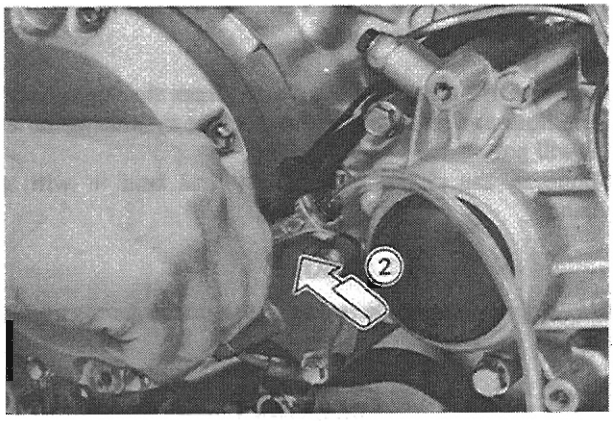

1. Pump the clutch lever a few times until it becomes hard and then hold it squeezed.
2. Quickly open and close the bleed valve.
3. Release the clutch lever.

○Check the fluid level in the reservoir often, replenishing it as necessary.

NOTE

○*If the fluid in the reservoir runs completely out any time during bleeding, the bleeding operation must be done over again from the beginning since air will have entered the line.*

○Repeat this operation until fresh clutch fluid comes out from the plastic hose or the color of the fluid changes.

http://manuals.magnamaniac.com

WARNING

○Do not mix two brands of fluid.

Master Cylinder

Installation

●When installing the clutch master cylinder, be careful of following.

○The master cylinder clamp must be installed with the rear view mirror holder.

○Tighten the upper clamp bolt first, and then the lower clamp bolt to the specified torque (see Exploded View).

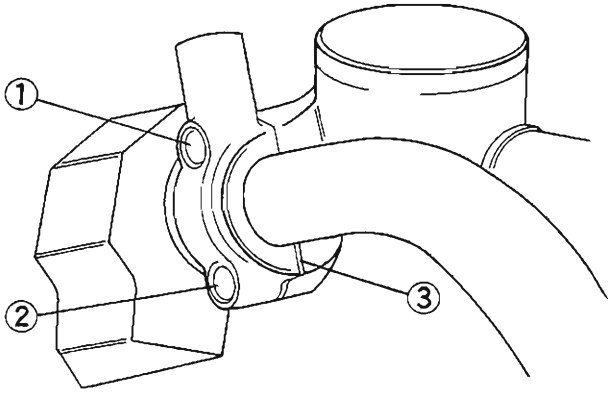

1. Tighten upper clamp bolt first.
2. Lower Clamp Bolt
3. Clearance

○Replace the aluminum washer on each side of the clutch hose fitting with a new one.

○Tighten the banjo bolt to the specified torque (see Exploded View).

●Perform the following after installing the master cylinder.

Bleed for clutch line
Check for clutch operation
Check for fluid leakage

Disassembly

●Remove the following.

Clutch Lever
Dust Cover
Circlip
Piston and Secondary Cup, Primary Cup
Spring

NOTE

○*Do not remove the secondary cup from the piston.*

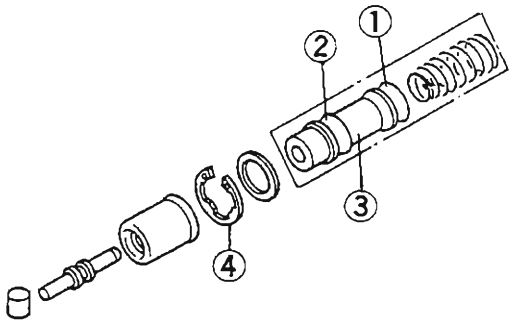

1. Primary Cup
2. Secondary Cup
3. Piston
4. Circlip

Assembly

●Clean the disassembled parts with clutch fluid and apply clutch fluid to the inner wall of the cylinder.

CAUTION

○**Take care not to scratch the piston or the inner wall of the cylinder.**

Inspection

●Check the following for wear, damage, cracks, or deterioration:
Cylinder Inner Wall and Piston
Primary and Secondary Cups
Dust Cover
Spring
●Check that the relief and supply ports on the cylinder are not plugged.

Clutch Slave Cylinder

Removal

●Perform the following if the clutch slave cylinder is to be disassembled.
○Loosen the clutch hose banjo bolt on the clutch slave cylinder.
○Remove the mounting bolts and take off the clutch slave cylinder.

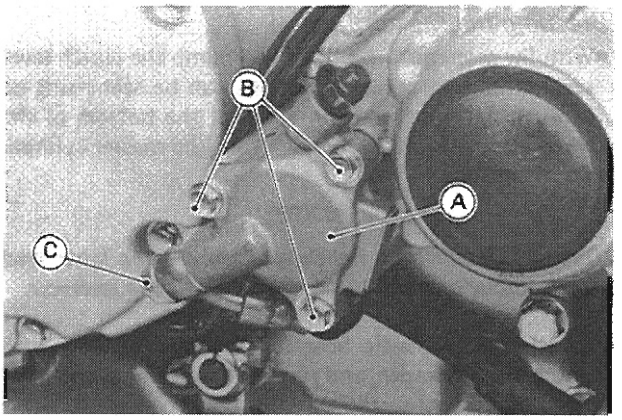

A. Slave Cylinder
B. Mounting Bolts
C. Banjo Bolt

○Remove the banjo bolt and free the cylinder from the hose.
●Perform the following if the clutch slave cylinder is to be removed but not disassembled.

CAUTION

○**If the clutch slave cylinder is removed and left alone, the piston will be pushed out by the spring and the clutch fluid will drain out.**

○Remove the clutch slave cylinder from the engine with the hose and push the piston into the cylinder as far as it will go.
○Squeeze the clutch lever slowly and hold it with a band.

NOTE

○***Holding the clutch lever keeps the piston from coming out.***

CAUTION

○**Immediately wipe up any brake fluid that spills. It may damage painted or plated surfaces.**

Installation

●Note the following.
○Replace the aluminum washers on each side of the clutch hose fitting with new ones.
○Tighten the banjo bolt to the specified torque (see Exploded View).
○Replace the spacer of the clutch slave cylinder with new one.
○Apply non-permanent locking agent to the slave cylinder mounting bolts.
○Check the fluid level in the master cylinder reservoir, and bleed the air in the clutch line.
○Check the clutch operation.

http://manuals.magnamanac.com

Disassembly

●Leaving the clutch slave cylinder removed, allow the piston to move slowly out under spring pressure.

Assembly

●Do the following.

○Apply clutch fluid to the outside of the piston and the fluid seal.

○Install the fluid seal as shown in the figure.

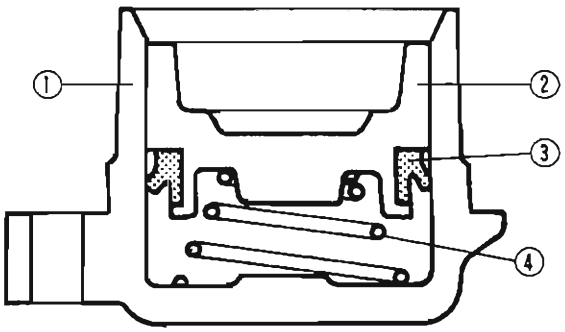

1. Cylinder
2. Piston
3. Fluid Seal
4. Spring

CAUTION

○Replace the fluid seal with a new one if it was removed from the piston.

Clutch

Removal

NOTE

○An air impact wrench is required for clutch removal.

●Remove the muffler (see Engine Top End chapter).

●Place a suitable stand under the crankcase to support the engine.

●Remove the right down tube (see Frame chapter).

●Remove the right engine cover (see Crankshaft/Transmission chapter).

●Remove the retainer and take the operating plate out of the clutch assembly.

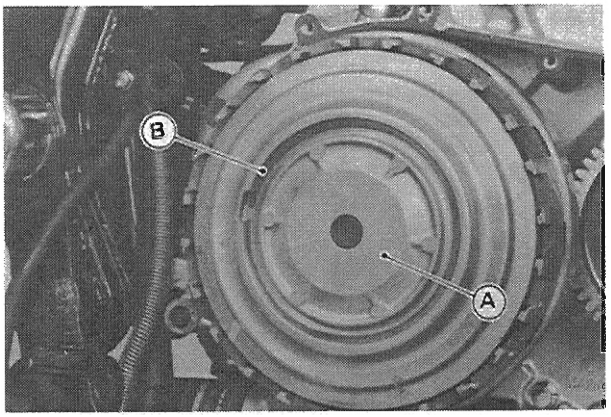

A. Operating Plate B. Retainer

●Unscrew the clutch hub nut by using the air impact wrench.

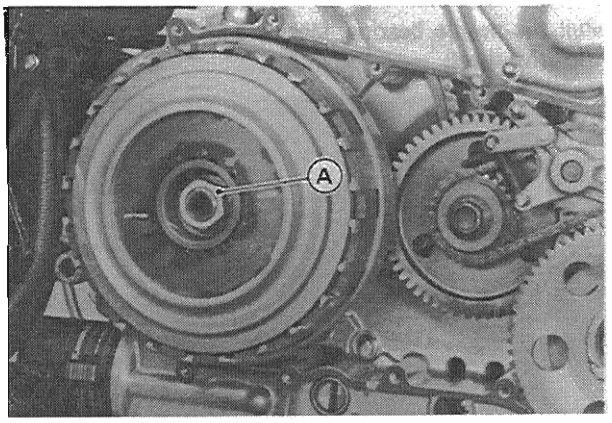

A. Hub Nut

●Take the clutch spring plate, clutch spring and the clutch spring holder out of the clutch hub.

●Take the back torque limiter springs, friction plates, steel plates and the outer hub out of the clutch housing.

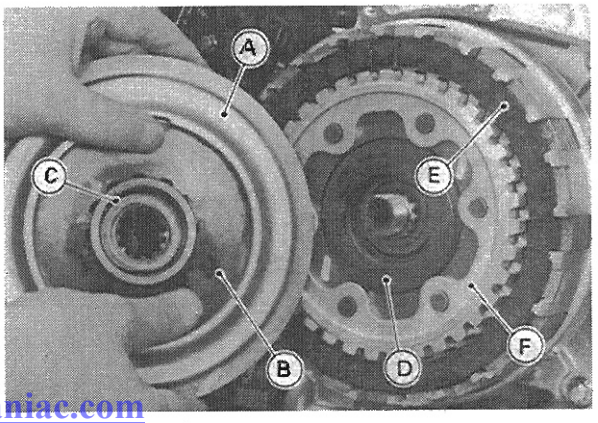

A. Spring Plate
B. Clutch Spring
C. Clutch Spring Holder
D. Limiter Spring
E. Friction/Steel Plates
F. Outer Hub

http://manuals.magnamaniac.com

●Take the inner hub, collar, washer and clutch housing out of the crankcase.

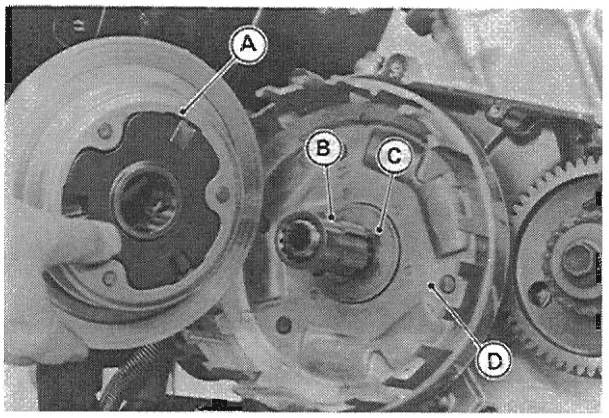

A. Inner Hub
B. Collar
C. Washer
D. Clutch Housing

●Pull the needle bearing, sleeve, and thrust washer off the drive shaft.

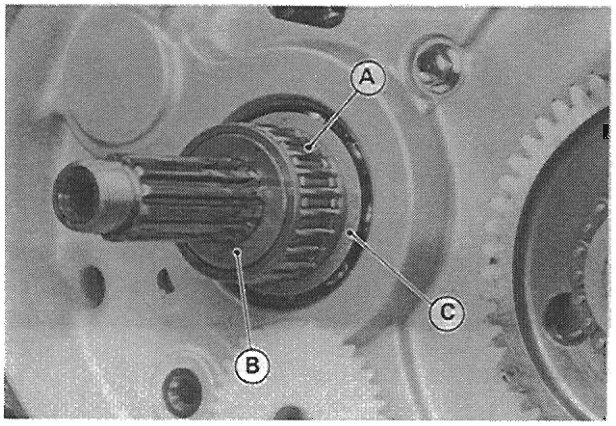

A. Needle Bearing
B. Sleeve
C. Washer

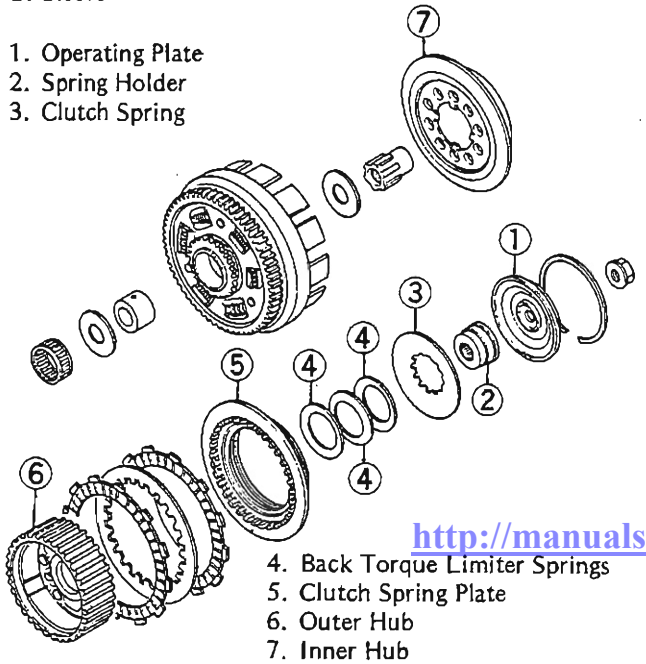

1. Operating Plate
2. Spring Holder
3. Clutch Spring
4. Back Torque Limiter Springs
5. Clutch Spring Plate
6. Outer Hub
7. Inner Hub

http://manuals.magnamaniac.com

Installation

●Clutch installation is the reverse of removal. Note the following.

○When replacing any one of the following parts, adjust the spring plate free play (see Clutch Plate Replacement).

Spring Plate
Friction Plate
Steel Plate

○When installing the clutch housing, mesh the oil pump drive gear with the oil pump gear so that the pump gear turns.

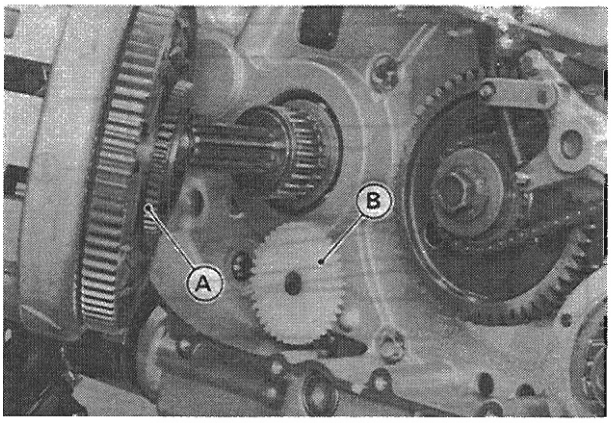

A. Pump Drive Gear
B. Pump Gear

CAUTION

○**If new dry steel plates and friction plates are installed, apply engine oil to the surfaces of each plate to avoid clutch plate seizure.**

○ Install the last friction plate in the shallow groove on the housing as shown.

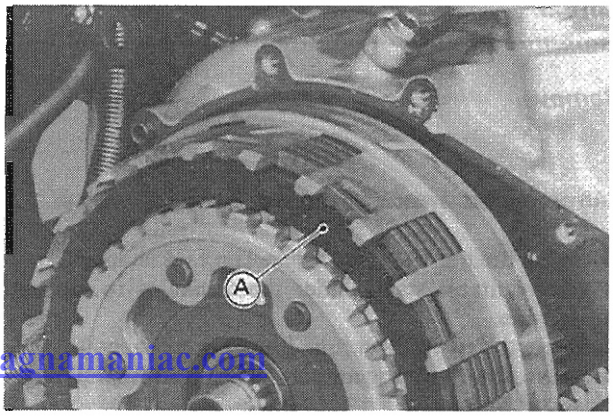

A. Last Friction Plate

oApply grease to the back torque limiter springs and attach them as shown.

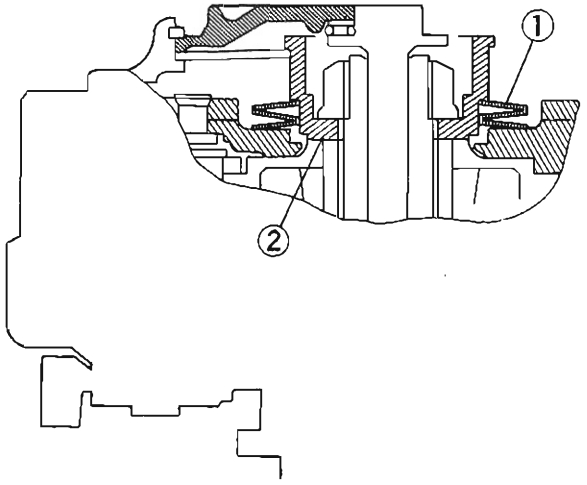

1. Limiter Springs 2. Spring Holder

oTighten the clutch hub nut to the specified torque holding the primary gear bolt (see Exploded View).

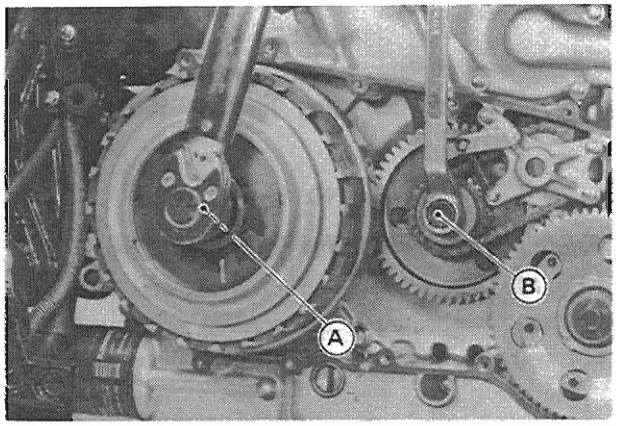

A. Hub Nut B. Primary Gear Bolt

●Squeeze the clutch lever slowly and hold it with a band while push the spring plate pusher into the clutch hub.

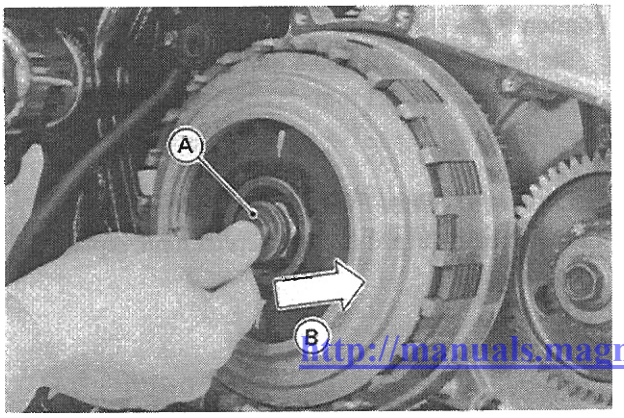

A. Pusher B. Push in

Clutch Inner Hub Disassembly/Assembly

●Using a press and suitable bearing driver (special tool), compress the damper springs.

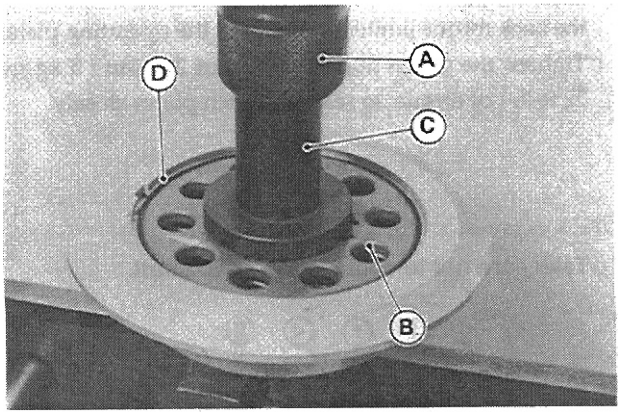

A. Press C. Bearing Driver: 57001-1129
B. Damper Spring D. Retainer

●Remove the retainer, damper springs, and damper cam.

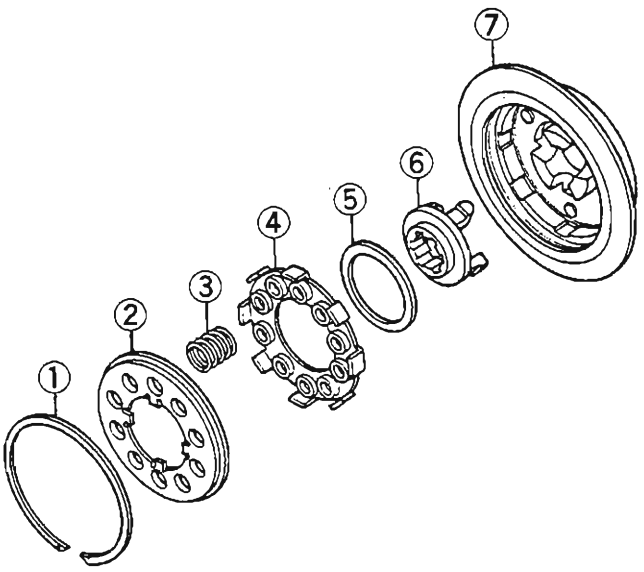

1. Retainer
2. Spring Holder
3. Damper Spring
4. Spring Holder
5. Spacer
6. Damper Cam
7. Inner Hub

http://manuals.magnamaniac.com

Spring Plate Free Play Measurement

Insufficient spring plate free play will cause the engine braking effect to be more sudden, resulting in rear wheel hop. On the other hand, if the free play is excessive, the clutch lever may feel "spongy" or pulsate when pulled.

- Hold the extra drive shaft steady with a vise and install the clutch parts on an extra drive shaft. Do not install the back torque limiter springs and the operating plate.
- Tighten the clutch hub nut to about 29 N-m (3 kg-m, 22 ft-lb) of torque to seat the clutch plates closely.

CAUTION

Take care not to damage the drive shaft.

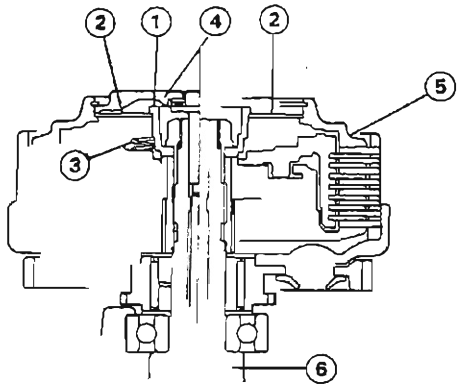

1. Holder
2. Clutch Spring
3. Back Torque Limiter Springs
4. Operating Plate
5. Spring Plate
6. Drive Shaft

- Unscrew the hub nut, then take the holder, operating plate, and the clutch spring out of the housing.
- Reinstall the holder and tighten the hub nut lightly.
- To measure the free play, set the dial gauge "O" against the clutch spring plate.
- Turn the clutch housing back and forth . The difference between the highest and lowest gauge readings is the amount of free play.

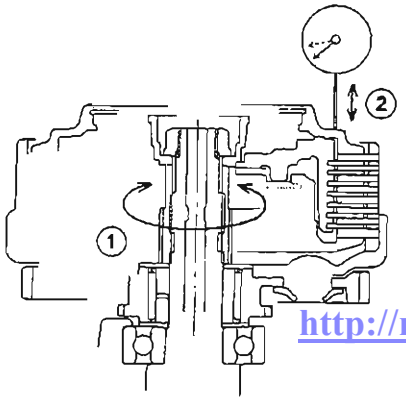

1. Turn back and forth.
2. Up and Down.

Spring Plate Free Play

Usable Range: 0.30 — 1.30 mm

Spring Plate Free Play Adjustment

- Measure the spring plate free play.

☆If the free play is not within the usable range, install the Standard Steel Plates 2.0 mm thick ×6 and 1.6 or 2.3 mm thick ×1 ; total 7 plates.

- Measure the spring plate free play again.

Steel Plates

Thickness (mm)	Part Name
1.6	13089-1080
2.0	13089-1075
2.3	13089-1081

NOTE

- *If new friction plates are installed, apply engine oil to the surfaces of each plate.*

Friction and Steel Plate Damage, Wear

- Visually inspect the friction and steel plates for signs of seizure, overheating (discoloration), or uneven wear.
- Measure the thickness of the friction plates at several points.

★If any plates show signs of damage, or if they have worn past the service limit, measure the spring plate free play and adjust it if necessary.

Friction Plate Thickness

Standard : 3.3 — 3.5 mm

Service Limit : 3.1 mm

Friction and Steel Plate Warp Inspection

★If any plate is warped over the service limit, replace the plates as a set.

http://manuals.magnamaniac.com

Friction and Steel Plate Warp

Standard : less than 0.2 mm

Service Limit : 0.3 mm

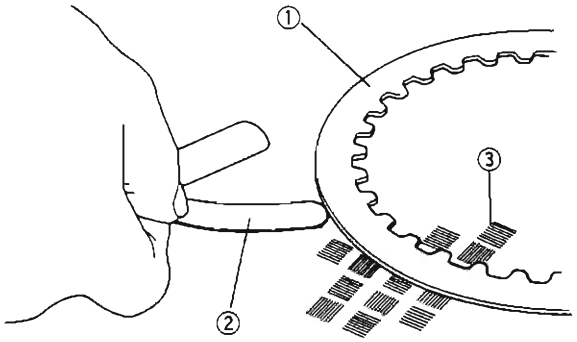

1. Friction or Steel Plate
2. Thickness Gauge
3. Surface Plate

Clutch Housing Finger Inspection

●Visually inspect the fingers of the clutch housing where the tangs of the friction plates hit them.

★If they are badly worn or if there are grooves cut where the tangs hit, replace the housing. Also, replace the friction plates if their tangs are damaged.

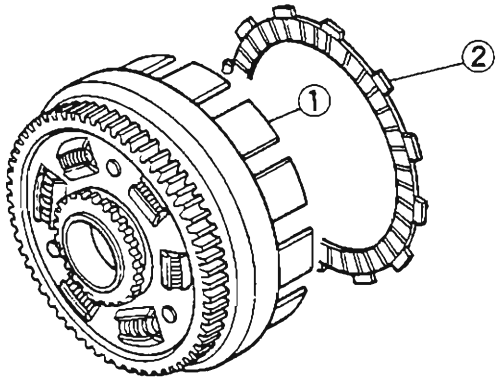

1. Clutch Housing Finger
2. Friction Plate Tang

Clutch Hub Spline Inspection

●Visually inspect where the teeth on the steel plates wear against the splines of the clutch hub.

★If there are notches worn into the splines, replace the clutch hub. Also, replace the steel plates if their teeth are damaged.

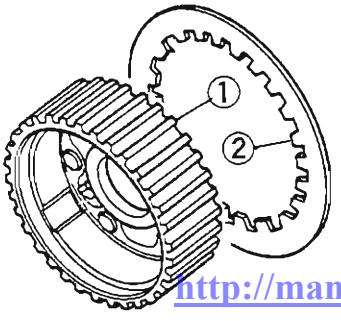

1. Clutch Hub Spline
2. Steel Plate Teeth

http://manuals.magnamaniac.com

Cam Damper Inspection

●Visually inspect the damper cam, damper spring, and cam follower.

★Replace any damaged parts.

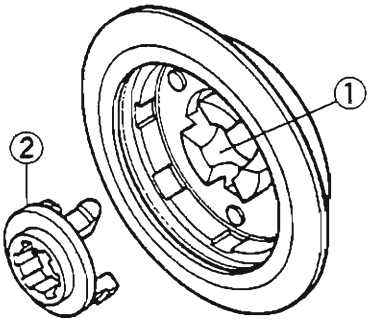

1. Cam
2. Cam Follower

Clutch Spring Height Measurement

★If the spring height is less than the service limit, it must be replaced.

Clutch Spring Height

Standard:	**4.7 mm**
Service Limit:	**4.4 mm**

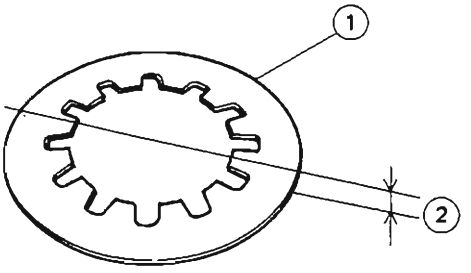

1. Clutch Spring
2. Spring Height

Engine Lubrication System

Table of Contents

Exploded View 6-2
Engine Oil Flow Chart 6-4
Specifications 6-6
Special Tools 6-6
Sealant 6-6
Engine Oil and Oil Filter 6-7
  Oil Level Inspection 6-7
  Engine Oil Change 6-7
  Oil Filter Change 6-7
  Oil Pump Screen Cleaning 6-8
Oil Pump 6-8
  Removal 6-8
  Installation 6-9
Oil Pipes 6-9
  Removal 6-9
  Installation 6-10
Oil Pressure Measurement 6-10
  Oil Pressure Measurement 6-10

http://manuals.magnamaniac.com

Exploded View

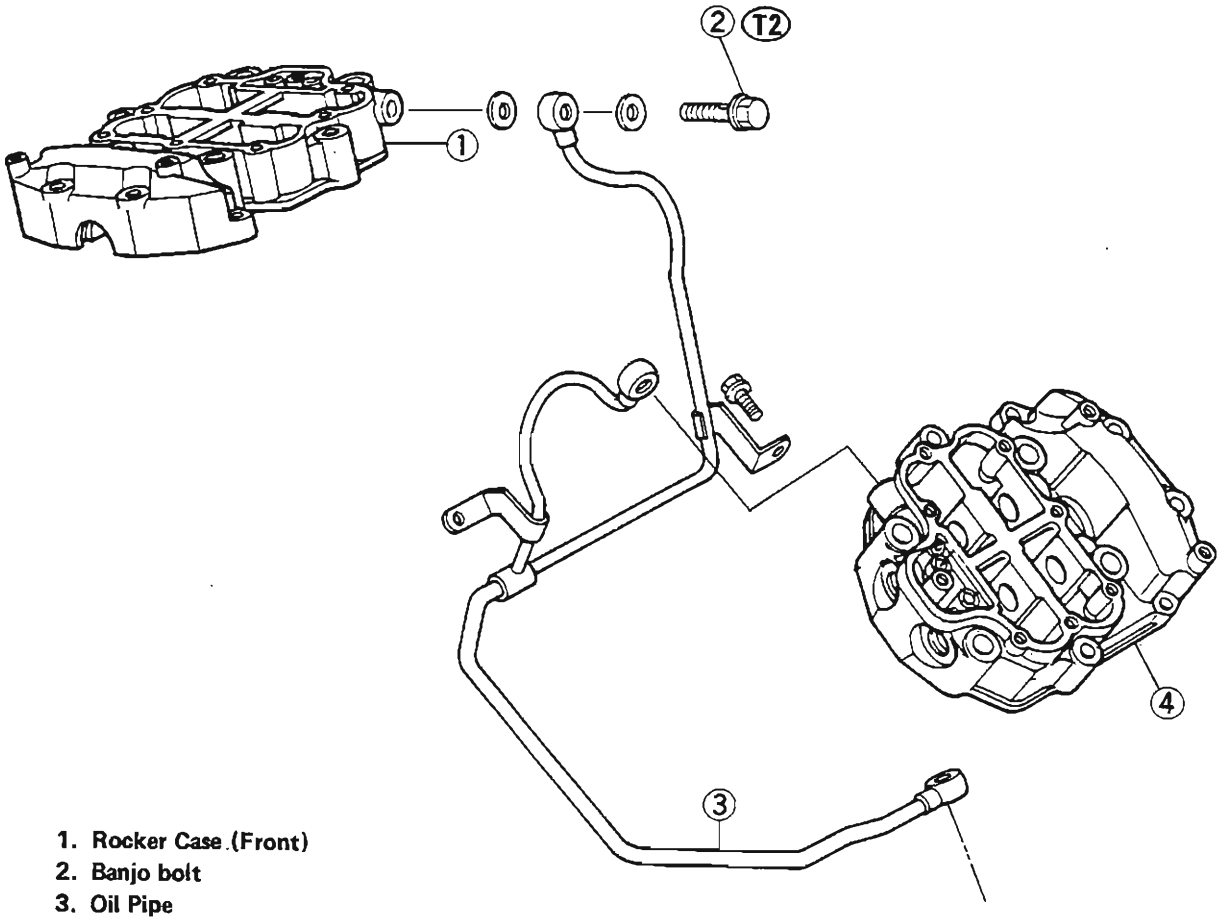

1. Rocker Case (Front)
2. Banjo bolt
3. Oil Pipe
4. Rocker Case (Rear)
5. Breather Pipes (Left)
6. Filter
7. Breather Pipes (Right)
8. Crankcase Half (Left)
9. Crankcase Half (Right)
10. Oil Pressure Switch
11. Oil Pressure Relief Valve
12. Oil Pump
13. Oil Filter Mounting Bolt
14. Oil Filter
15. Oil Screen Plug
16. Oil Screen
17. Oil Pipe (Inside Left)
18. Oil Pipe (Inside Right)
19. Engine Drain Plug
20. Oil Nozzle

O : Apply engine oil to the gasket.
L : Apply non-permanent locking agent to the threads.
SS : Apply silicone sealant to the threads.
T1 : 2.9 N-m (0.30 kg-m, 20 in-lb)
T2 : 12 N-m (1.2 kg-m, 104 in-lb)
T3 : 15 N-m (1.5 kg-m, 11.0 ft-lb)
T4 : 18 N-m (1.8 kg-m, 13.0 ft-lb)
T5 : 20 N-m (2.0 kg-m, 14.5 ft-lb)
T6 : 35 N-m (3.5 kg-m, 25 ft-lb)
T7 : 25 N-m (2.5 kg-m, 18.0 ft-lb)

http://manuals.motormania.com

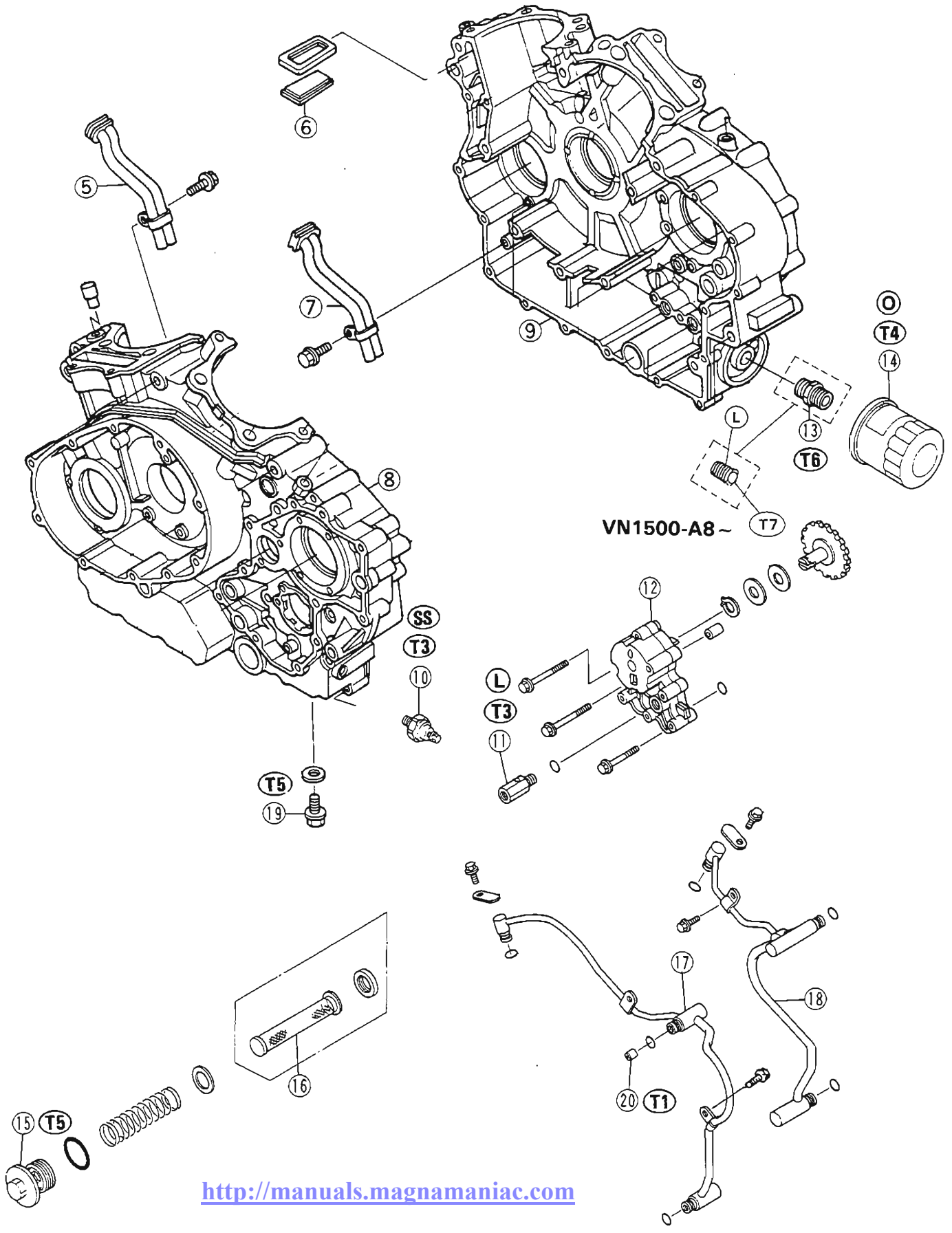

http://manuals.magnamaniac.com

Engine Oil Flow Chart

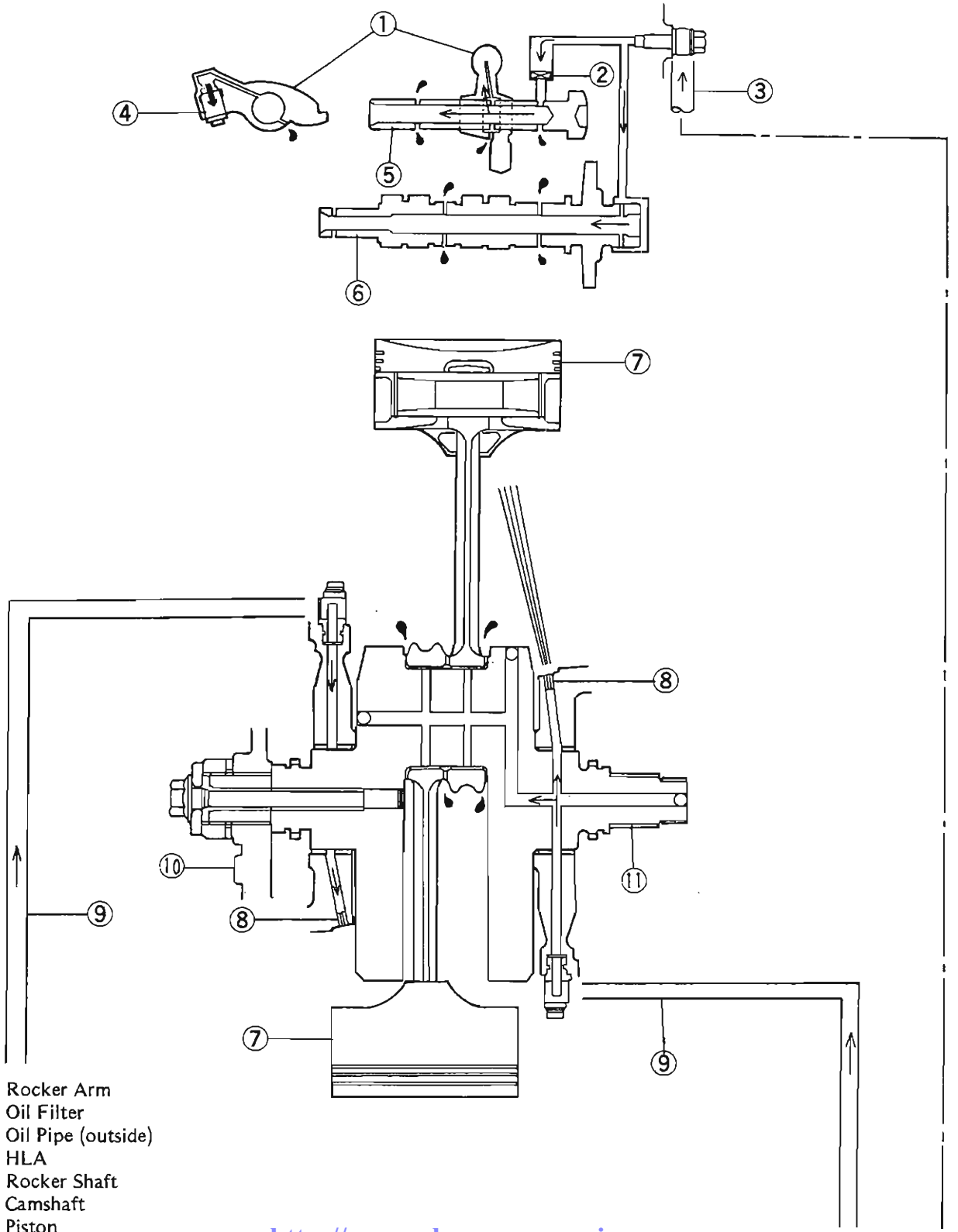

1. Rocker Arm
2. Oil Filter
3. Oil Pipe (outside)
4. HLA
5. Rocker Shaft
6. Camshaft
7. Piston
8. Oil Nozzle
9. Oil Pipe (In the crankcase)
10. Alternator Rotor
11. Crankshaft

http://manuals.magnamaniac.com

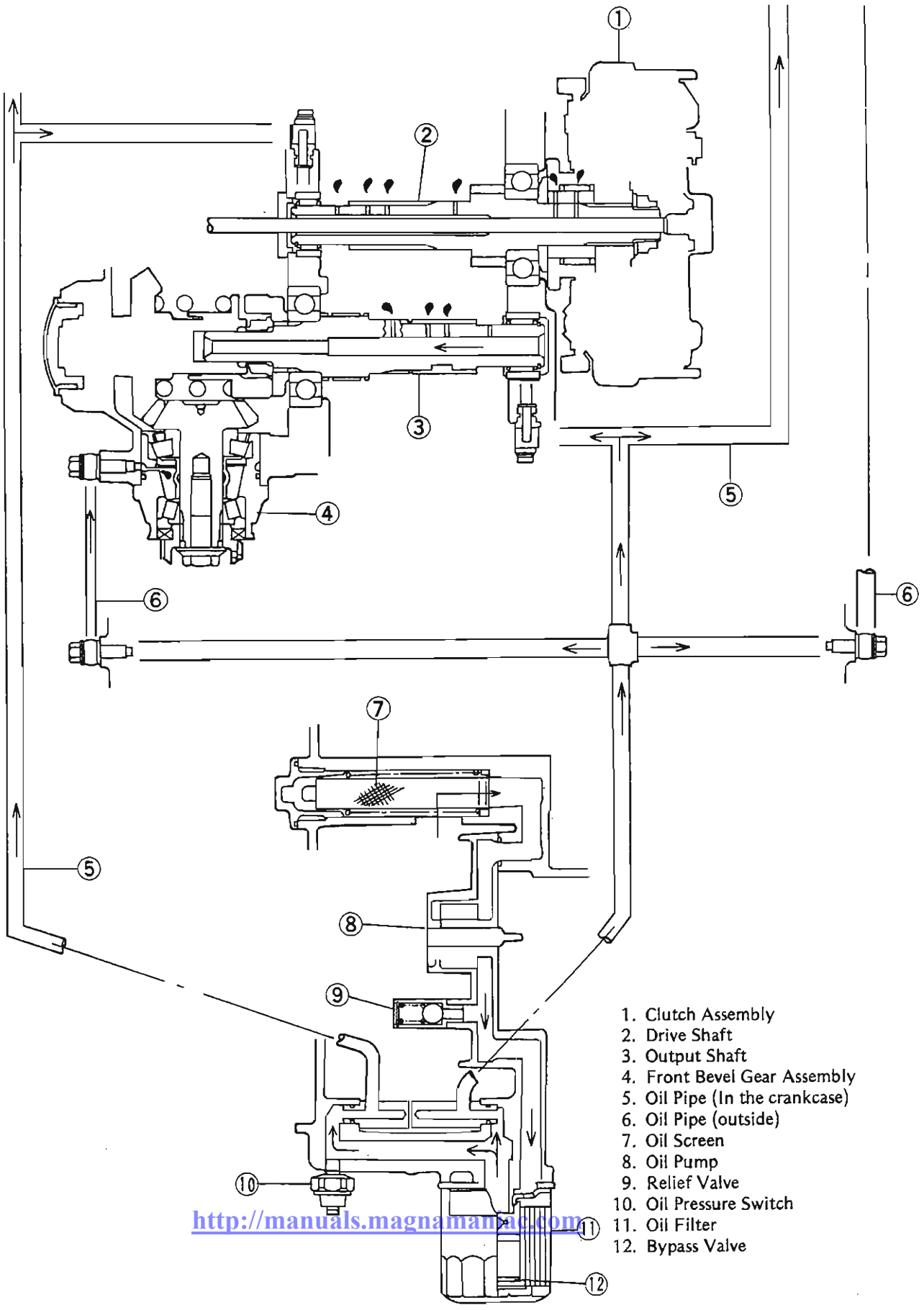

http://manuals.magnamanac.com

Specifications

Item	Standard
Engine Oil:	
Grade	SE or SF class
Viscosity	SAE 10W40, 10W50, 20W40, or 20W50
Capacity	2.5 L (when filter is not removed) 2.7 L (When filter is removed) 3.5 L (When engine is completely dry)
Oil Pressure Measurement:	
Oil pressure @2,000 r/min (rpm), oil temp. 100°C (212°F)	345 ~ 440 kPa (3.5 ~ 4.5 kg/cm², 50 ~ 64 psi)

Special Tools

Oil Pressure Gauge, 5 kg/cm²: 57001-125

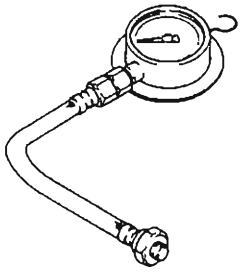

Oil Filter Wrench: 57001-1249

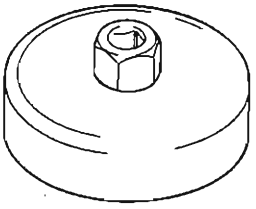

Oil Pressure Gauge Adapter: 57001-1033

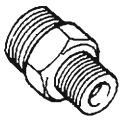

Sealant

Kawasaki Bond (Silicone Sealant): 56019-120

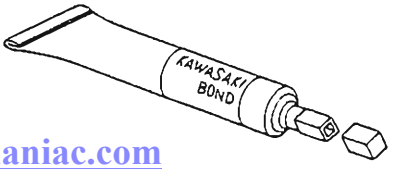

http://manuals.magnamaniac.com

Engine Oil and Oil Filter

WARNING

○Motorcycle operation with insufficient, deteriorated, or contaminated engine oil will cause accelerated wear and may result in engine or transmission seizure, accident, and injury.

Oil Level Inspection

●Situate the motorcycle so that it is perpendicular to the ground.

●Check that the engine oil level is between the upper and lower level lines in the gauge.

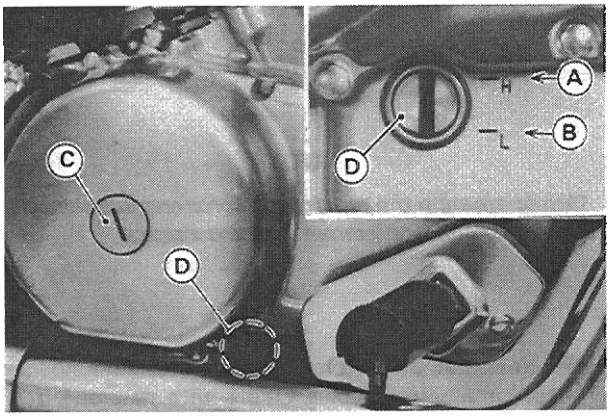

A. Upper Level
B. Lower Level
C. Oil Filler Cap
D. Oil Level Gauge

NOTE

○If the motorcycle has just been used, wait several minutes for all the oil to drain down.

○If the oil has just been changed, start the engine and run it for several minutes at idle speed. This fills the oil filter with oil. Stop the engine, then wait several minutes until the oil settles.

CAUTION

○Racing the engine before the oil reaches every part can cause engine seizure.

○If the engine oil gets extremely low or if the oil pump or oil passages clog up or otherwise do not function properly, the oil pressure warning light will light. If this light stays on when the engine is running above idle speed, stop the engine immediately and find the cause.

Engine Oil Change

●Set the motorcycle perpendicular to the ground after warming up the engine.

●Remove the engine drain plug to drain the oil.

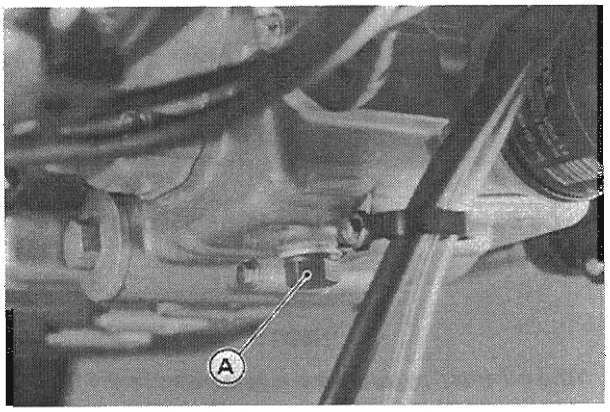

A. Drain Plug

○The oil in the oil screen chamber can be drained by removing the oil screen plug (see Oil Screen Cleaning).

○The oil in the filter can be drained by removing the filter (see Oil Filter Change).

★Replace the drain plug gasket with a new one if it is damaged.

●Tighten the drain plug to the specified torque (see Exploded View).

○Tighten the oil filter with the oil filter wrench (special tool) to the specified torque (see Exploded View).

○Tighten the oil screen plug to the specified torque (see Exploded View).

●Pour in the specified type and amount of oil.

Engine Oil

Grade:	**SE or SF class**
Viscosity:	**SAE 10W40, 10W50, 20W40, or 20W50**
Amount:	**3.5 L (engine is completely dry)**
	2.7 L (filter is removed)
	2.5 L (filter is not removed)

http://manuals.magnamarine.com

Oil Filter Change

●Drain the engine oil.

●Remove the oil filter with an oil filter wrench (special tool).

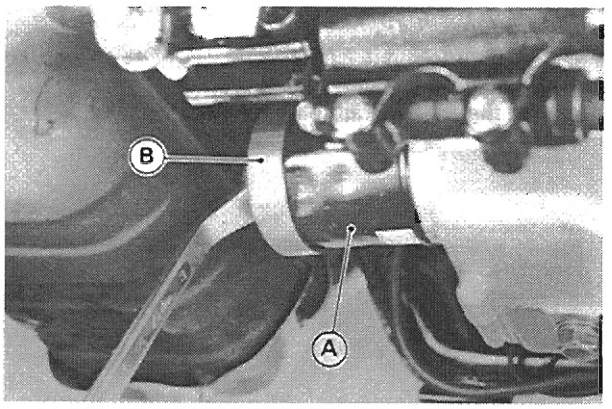

A. Oil Filter B. Wrench: 57001-1249

NOTE

○*The oil filter bypass valve is assembled in the filter (Do not disassembled).*

●When installing the oil filter, be careful of the following.
○Apply oil to the gasket before installation.
○Tighten the filter with the oil filter wrench (special tool) to the specified torque (see Exploded View) or tighten it with hand(s) about ¾ turns after gasket contacts mounting surface of engine.
○Pour in the specified type and amount of oil.

Oil Pump Screen Cleaning

●Remove the following.
Engine Oil (Draining)
Oil Screen Plug
Oil Screen with Spring

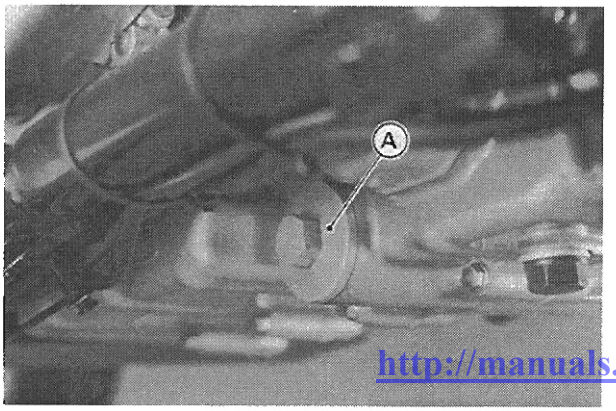

A. Oil Screen Plug

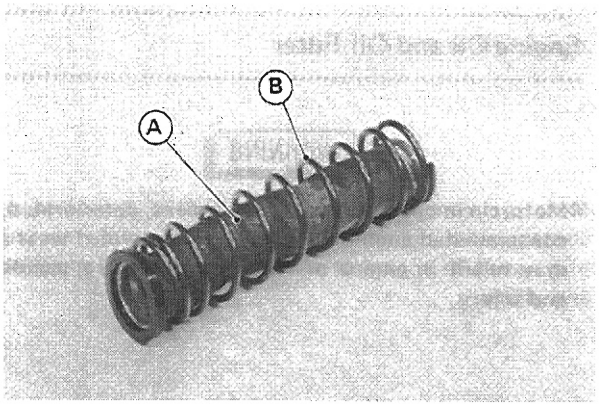

A. Oil Screen B. Spring

●Clean the screen with high flash-point solvent.
○Clean the screen thoroughly whenever the engine oil is changed.

NOTE

○*While cleaning the screen, check for any metal particles that might indicate internal engine damage.*

●When installing the screen, be careful of the following.
☆Replace the screen plug O-ring with new one if it is damaged.
☆Replace the screen with a new one if it is damaged (holes and broken wires).
○Be sure to put in the oil screen with the rubber gasket end inside.
○Tighten the screen plug the specified torque (see Exploded View).
○Pour in the specified type and amount of oil.

Oil Pump

Removal

●Perform the following.
○Remove the engine (see Engine Removal/Installation chapter).
○Split the crankcase (see Crankshaft/Transmission chapter).
○Remove the oil pump bolts, and take off the pump out of the RH crankcase half.

http://manuals.magnamaniac.com

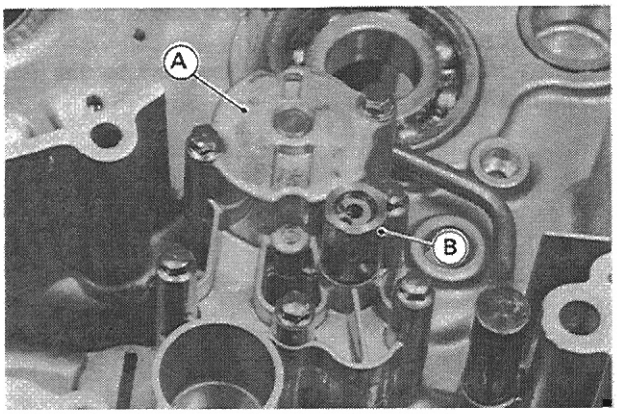

A. Oil Pump B. Relief Valve

oUnscrew the relief valve if necessary.
oRemove the circlip, and pull the pump gear out of the crankcase if necessary.

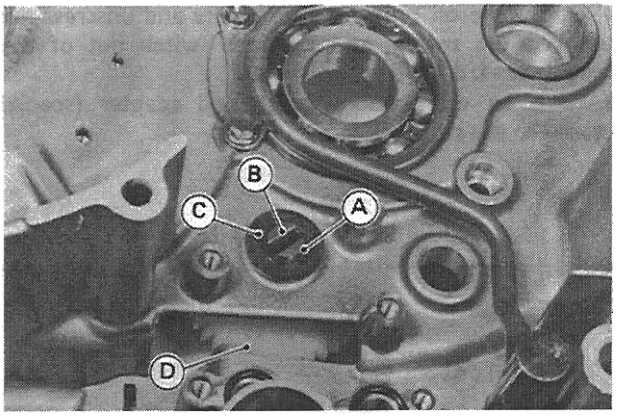

A. Circlip C. Washer
B. Pump Shaft D. Pump Gear

Installation

●Note the following.
oNote the position of the oil pump shaft projection and turn the pump gear shaft so that the projection fits into the slot.
oReplace the O-rings with new ones if they are damaged.

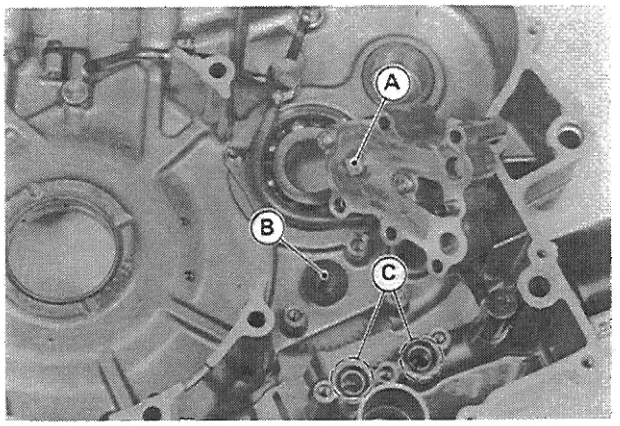

A. Pump Shaft Projection C. O-rings
B. Gear Shaft Slot

oTighten the pump bolts to the specified torque (see Exploded View).
oApply a non-permanent locking agent to the threads of the relief valve (see Exploded View).

Oil Pipes

Removal

●Remove the outside oil pipes as follows.

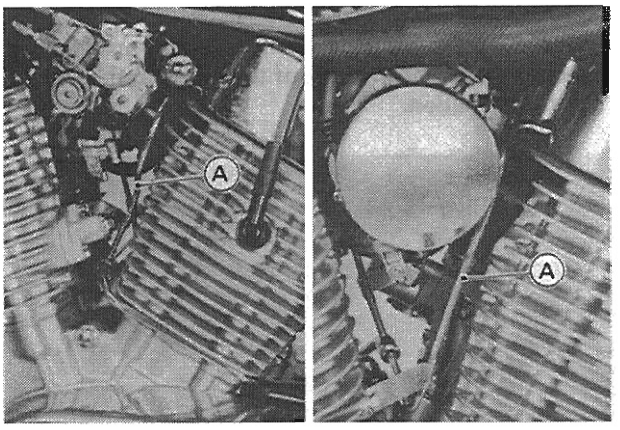

A. Oil Pipe

●Remove the inside oil pipes from the inside of the crankcase halves.
oSplit the crankcase (see Crankshaft/Transmission chapter).

http://manuals.magnamaniac.com

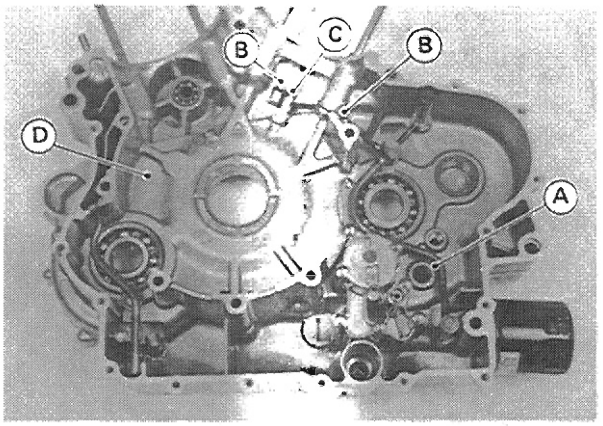

A. Oil Pipe
B. Mounting Bolts
C. Holder
D. RH Crankcase Half

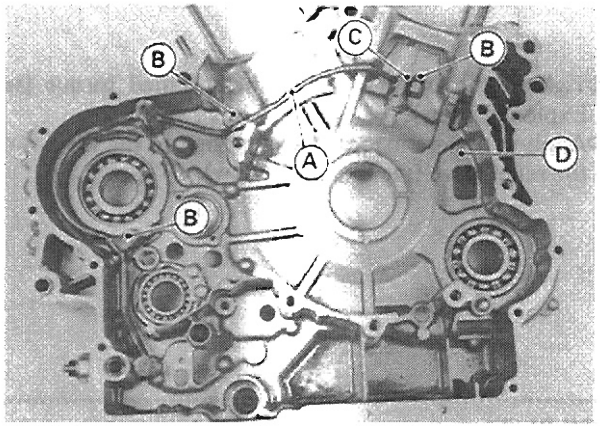

A. Oil Pipe
B. Mounting Bolts
C. Holder
D. LH Crankcase Half

Installation

- Note the following.
  - Check that the oil pipe fitting's O-rings are in good condition, and apply a little of the grease to the O-rings before installation.

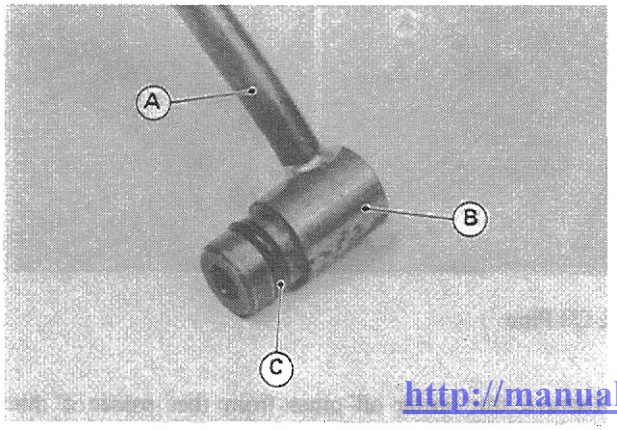

A. Oil Pipe
B. Fitting
C. O-ring

http://manuals.magnamaniac.com

  - Replace the copper washers on each side of the engine outside fittings with new ones.
  - Tighten the banjo bolts to the specified torque (see Exploded View).

Oil Pressure Measurement

Oil Pressure Measurement

NOTE

- ***Measure the oil pressure after the engine is warmed up.***

- Remove the oil pressure switch wire and unscrew the oil pressure switch, and take the switch out of the engine toward the rear.
- Attach an oil pressure gauge and adapter (special tools) to the switch hole.

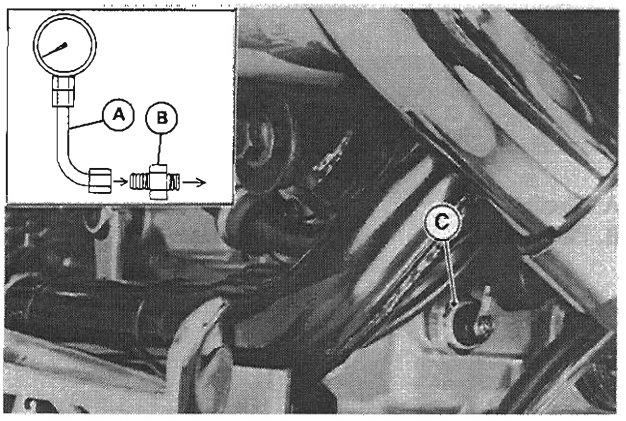

A. Oil Pressure Gauge: 57001-164
B. Adapter: 57001-1033
C. Oil Pressure Switch

Oil Pressure

Standard:	More than 345 ~ 440 kPa (3.5 ~ 4.5 kg/cm^2, 50 ~ 64 psi) @2 000 r/min (rpm), 100°C (212°F) of oil temp.

★If the oil pressure is much lower than the standard, check the oil pump, relief valve, and/or crankshaft bearing insert for wear immediately.

●When installing the oil pressure switch, apply silicone sealant to the threads of the switch, and tighten it to the specified torque (see Exploded View).

http://manuals.magnamaniac.com

Engine Removal/Installation

Table of Contents

Exploded View 7-2
Special Tools 7-2
Engine Removal/Installation 7-3
Removal 7-3
Installation 7-6

http://manuals.magnamaniac.com

Exploded View

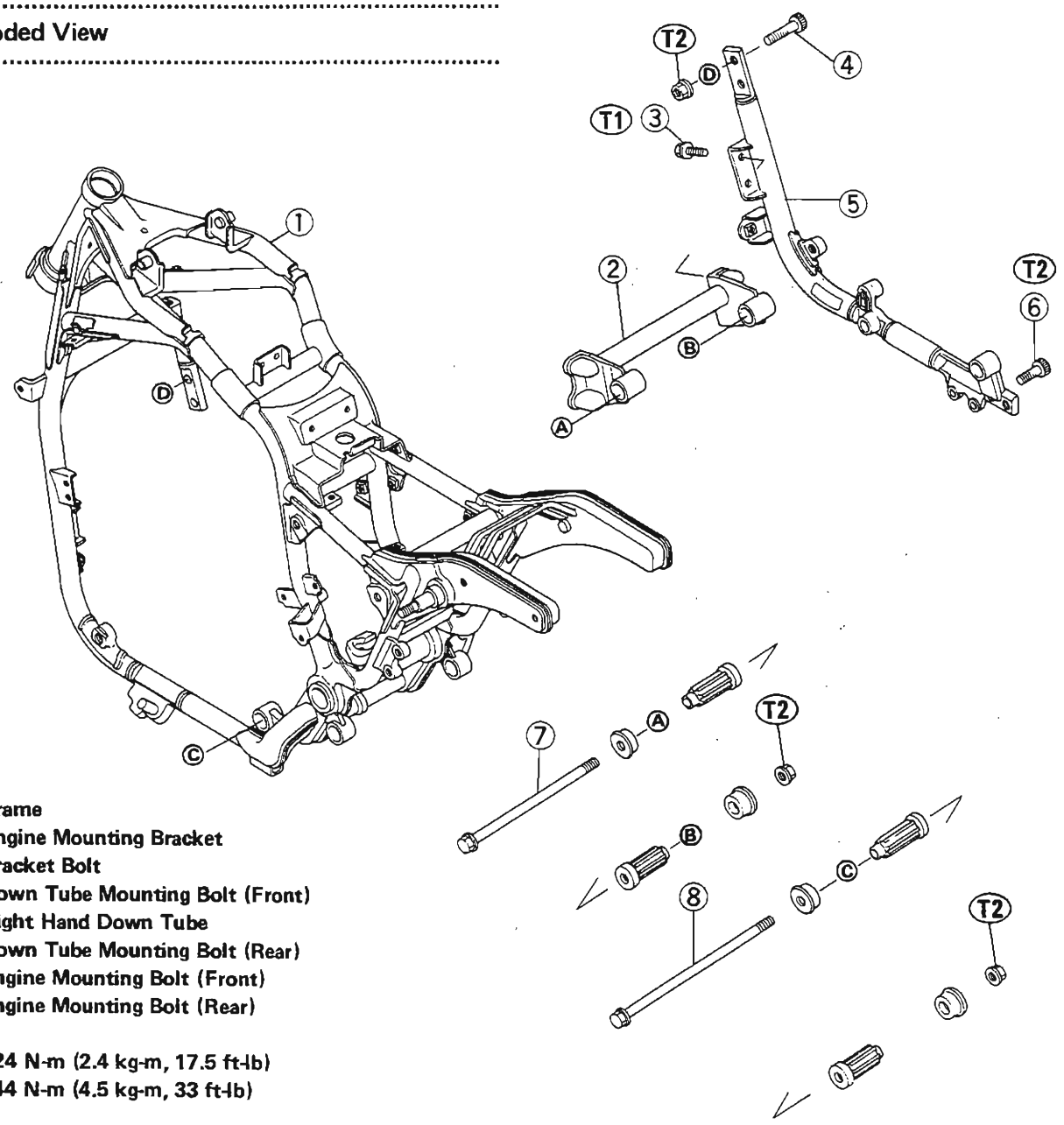

1. Frame
2. Engine Mounting Bracket
3. Bracket Bolt
4. Down Tube Mounting Bolt (Front)
5. Right Hand Down Tube
6. Down Tube Mounting Bolt (Rear)
7. Engine Mounting Bolt (Front)
8. Engine Mounting Bolt (Rear)

T1: 24 N-m (2.4 kg-m, 17.5 ft-lb)
T2: 44 N-m (4.5 kg-m, 33 ft-lb)

Special Tools

Jack Stand: 57001-1238

Attachment: 57001-1252

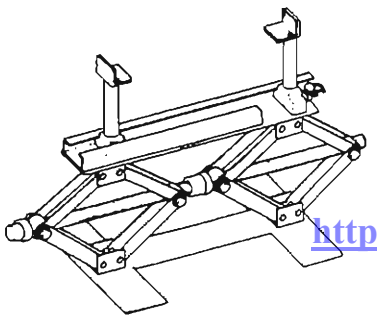

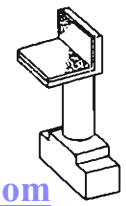

http://manuals.magnamaniac.com

Engine Removal/Installation

Removal

●Support the motorcycle perpendicular to the ground with the jack stand and the attachment (special tools).

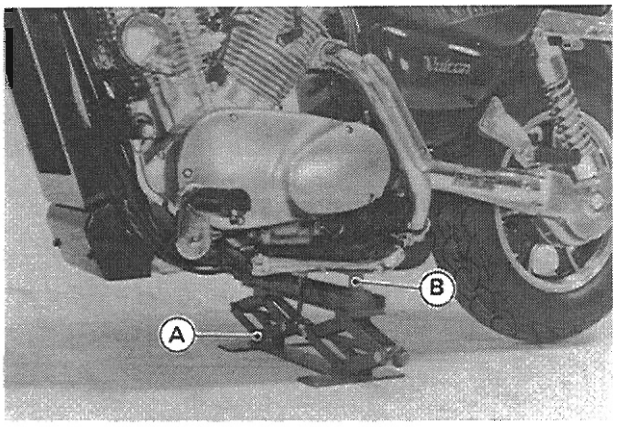

A. Jack Stand: 57001-1238
B. Attachment: 57001-1252

●Remove the following.
Engine Oil (see Engine Lubrication chapter)
Coolant (see Cooling System chapter)
Seat
Fuel Tank
Frame Top Tube Cover
Air Cleaner Housing (see Fuel System chapter)
Horn
Radiator (see Cooling System chapter)
Coolant Reservoir Tank (see Cooling System chapter)
Footpeg (LH)
Left Engine Cover
Clutch Slave Cylinder (see Clutch chapter)
Shift Pedal
Muffler and Exhaust Pipes (see Engine Top End chapter)
Clean Air Hoses
Cooling Hose (LH: Pull the hose out of the front cylinder.)

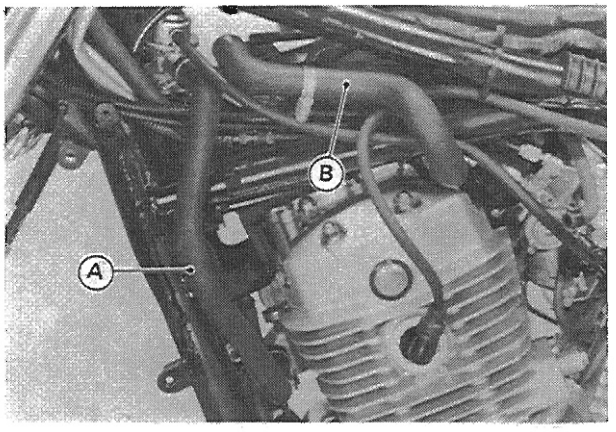

A. Clean Air Hose
B. Cooling Hose

Cooling Hose (RH: Pull the hose out of the rear cylinder.)
Surge Tank Duct
Thermostat Housing with the cooling hose.
Surge Tank

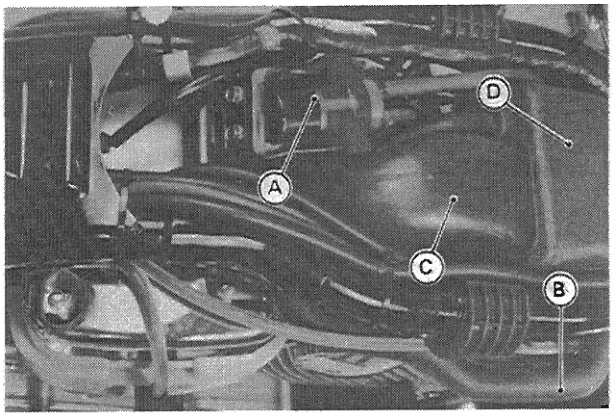

A. Fuel Pump
B. Cooling Hose
C. Surge Tank Duct
D. Surge Tank

Ignition Switch
Coolant Reservoir Tank Bracket
Clean Air Hose (Rear Cylinder)
Ignition Coil Assembly (move it on the frame)

http://manuals.magnamaniac.com

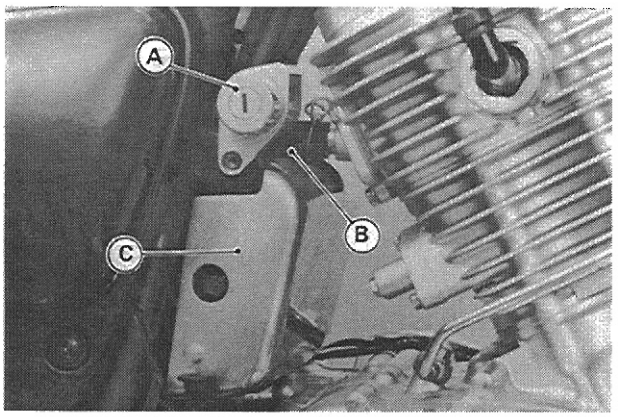

A. Ignition Switch
B. Clean Air Hose
C. Ignition Coil Assembly

Starter Motor Wire Terminal

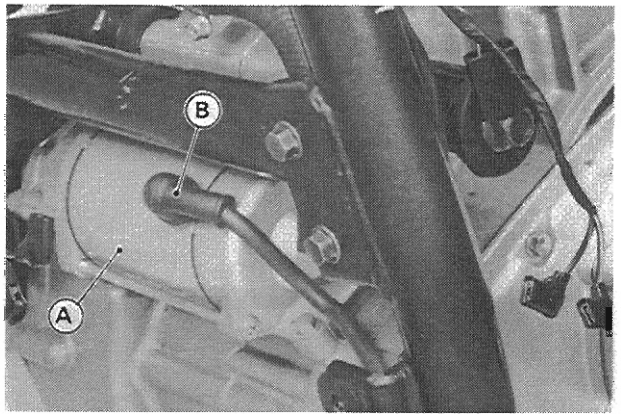

A. Starter Motor
B. Terminal

Oil Pressure Switch Wire Terminal
Neutral Switch Wire Terminal

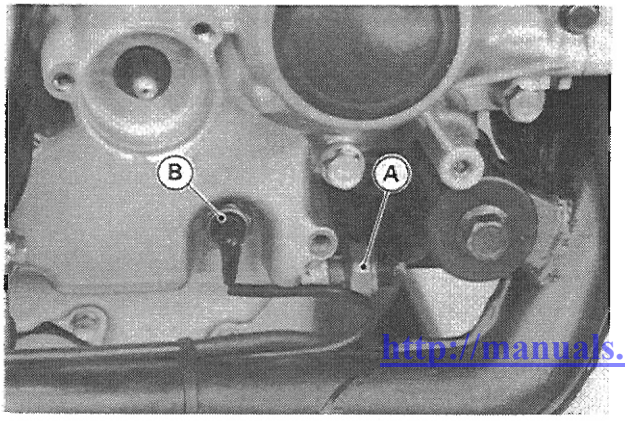

A. Oil Pressure Switch
B. Neutral Switch

Alternator and Pickup Coil Wire Connectors
Ground Wire Terminal

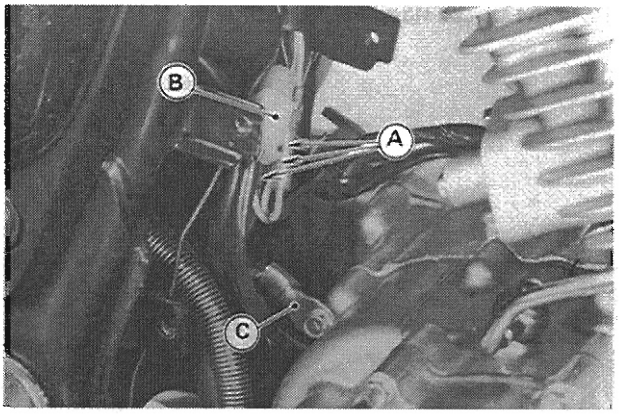

A. Alternator Wire Connectors
B. Pickup Wire Connector
C. Ground Wire Terminal

Throttle Cable Adjuster

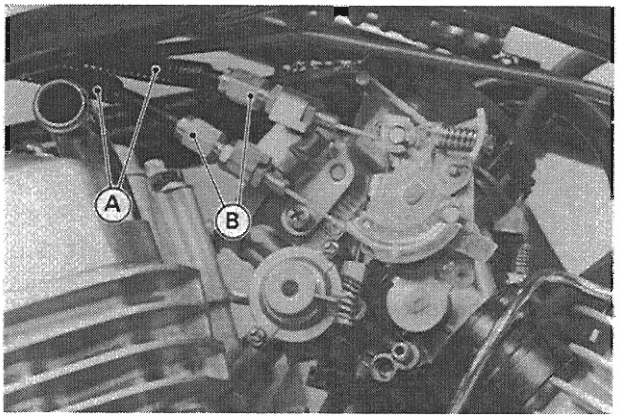

A. Throttle Cables
B. Adjusters

Carburetor Vacuum Hose (Both Side)
Rear Brake Light Switch Wire Connectors

http://manuals.magnamaniac.com

●Perform the following.
○Support the engine with a suitable stand, and remove the engine mounting bolts and bracket bolts.

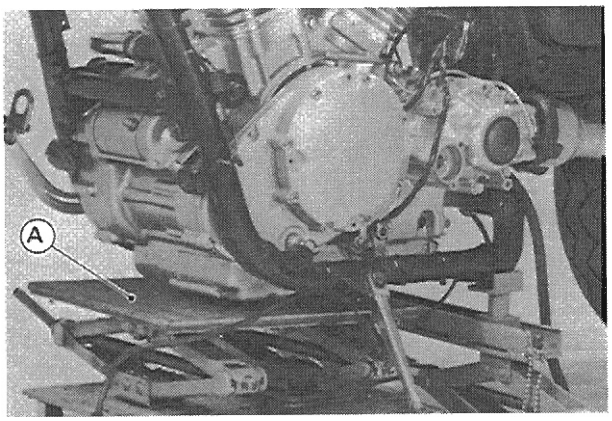

A. Suitable Stand

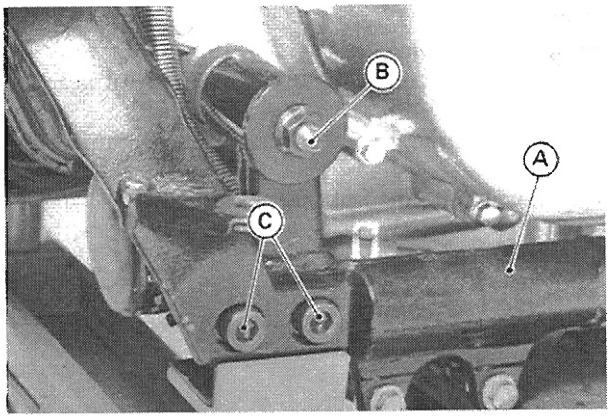

A. Right Down Tube
B. Engine Mounting Bolt
C. Frame Mounting Bolts

○Separate the right down tube, and move the down tube toward the rear.

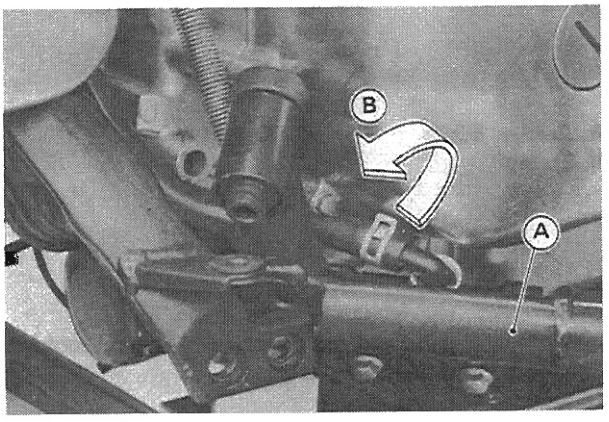

A. Right Down Tube
B. Pull the hoses.

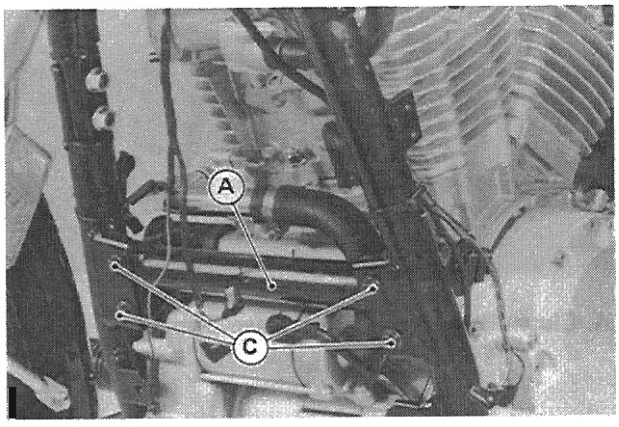

●Disconnect the propeller shaft from the engine.
○Remove the propeller shaft cover.
○Pull back the boots and push on the locking pin a little with a wire, then slip the engine unit toward the front and right side of the vehicle.

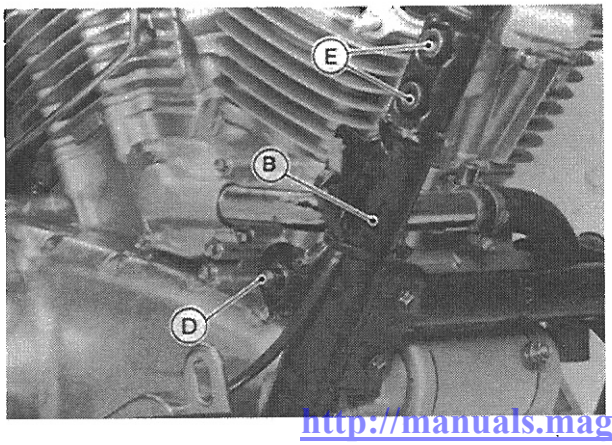

A. Engine Bracket
B. Right Down Tube
C. Bracket Bolts
D. Engine Mounting Bolt
E. Frame Mounting Bolts

http://manuals.magnamaniac.com

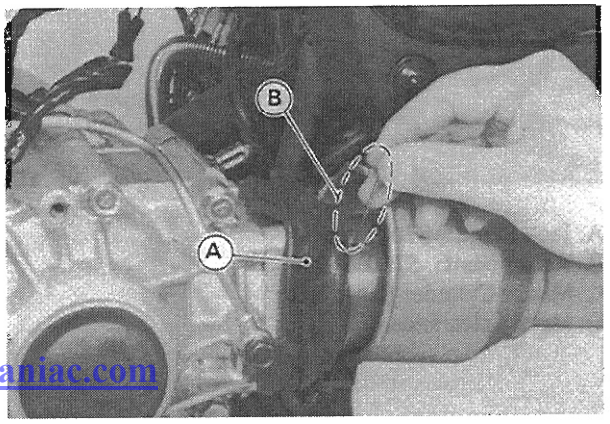

A. Boots
B. Push the pin.

Installation

●Note the following:

○Fit the rubber boots into the front bevel gear case opening.

○Install the spring into the inside of the front bevel gear joint.

○Put the pin into the front bevel gear joint.

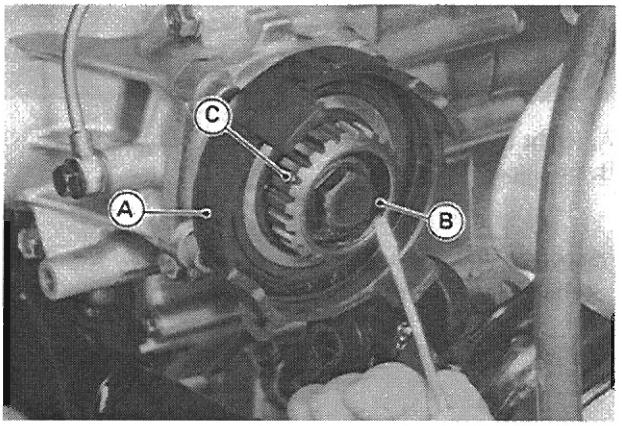

A. Rubber Boots
B. Spring
C. Pin

○Set the jack stand and the attachment (special tools) on the bottom of the frame as shown.

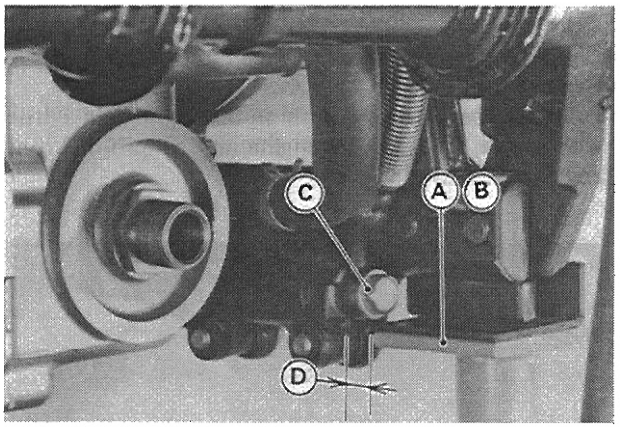

A. Jack Stand: 57001-1238
B. Attachment: 57001-1252
C. Master Cylinder Banjo Bolt
D. Make a clearance.

○When fitting the engine into the propeller shaft joint, push in the pin at the front bevel gear joint.

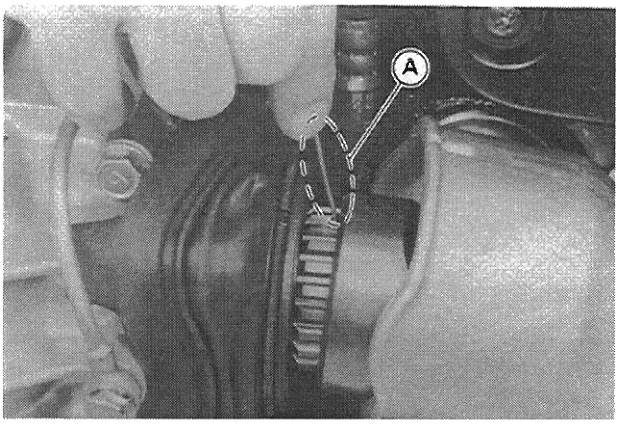

A. Push in the pin.

○Tighten the engine mounting bolts to the specified torque (see Exploded View).

○Route the clutch hose as follow.

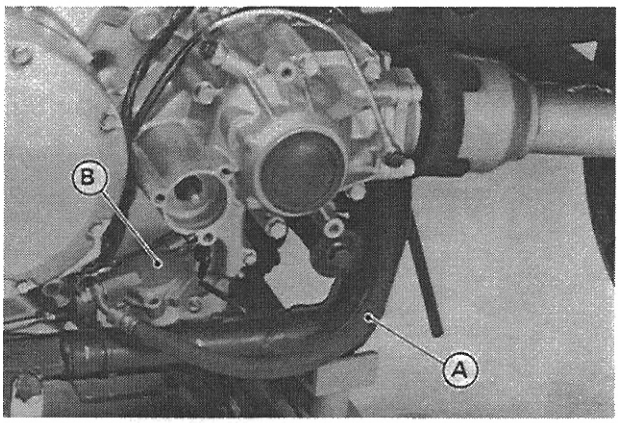

A. Clutch Hose
B. Slave Cylinder

○Route the wiring according to the diagrams (see General Information chapter).

○Connect the battery ground wire terminal to the engine as shown.

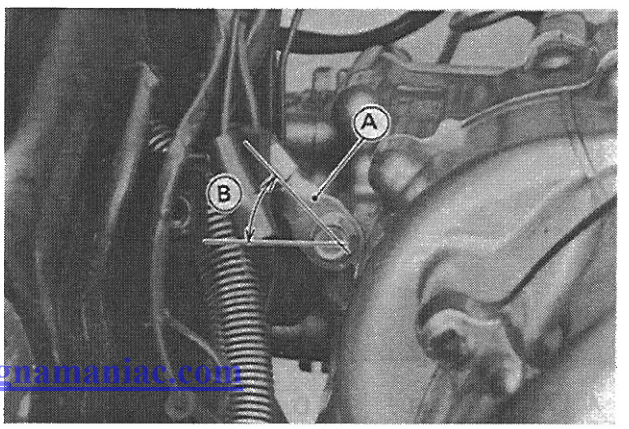

A. Battery Ground Wire
B. Abut 30°

http://manuals.magnamaniac.com

Crankshaft/Transmission

Table of Contents

Exploded View 8-2
Specifications 8-6
Special Tools 8-7
Sealant 8-7
Crankcase 8-8
Splitting 8-8
Assembly 8-11
Replacement 8-14
Crankshaft/Connecting Rods 8-15
Crankshaft Installation 8-15
Connecting Rod Removal 8-15
Connecting Rod Installation 8-15
Connecting Rod Big End Bearing Insert/Crankpin Wear 8-16
Crankshaft Runout 8-17
Crankshaft Main Bearing/Main Journal Wear 8-17
Crankshaft Side Clearance 8-18
Right Engine Cover 8-19
Removal 8-19
Installation 8-19
Left Engine Cover 8-19
Installation 8-19
Starter Motor Clutch 8-19
Removal 8-19
Installation 8-20
Disassembly 8-20
Assembly 8-20
Inspection 8-21
Balancer 8-21
RH Balancer Weight Removal 8-21
LH Balancer Weight Removal 8-21
RH Balancer Weight Installation 8-22
LH Balancer Weight Installation 8-22
Balancer Shaft Removal 8-22
Balancer Shaft Installation 8-22
Starter Torque Limiter 8-23
Removal 8-23
Inspection 8-23
Water Pump Idle Shaft Holder 8-23
Removal 8-23
Installation 8-23
Primary Gear 8-24
Removal 8-24
Installation 8-24
Transmission 8-24
External Shift Mechanism Removal 8-25
External Shift Mechanism Installation . . 8-25
External Shift Mechanism Inspection . . 8-26
Transmission Shafts Removal 8-27
Transmission Shafts Installation 8-27
Transmission Disassembly 8-27
Transmission Assembly 8-27
Shift Drum Removal 8-29
Shift Drum Disassembly/Assembly 8-29

http://manuals.magnamaniac.com

8

Exploded View

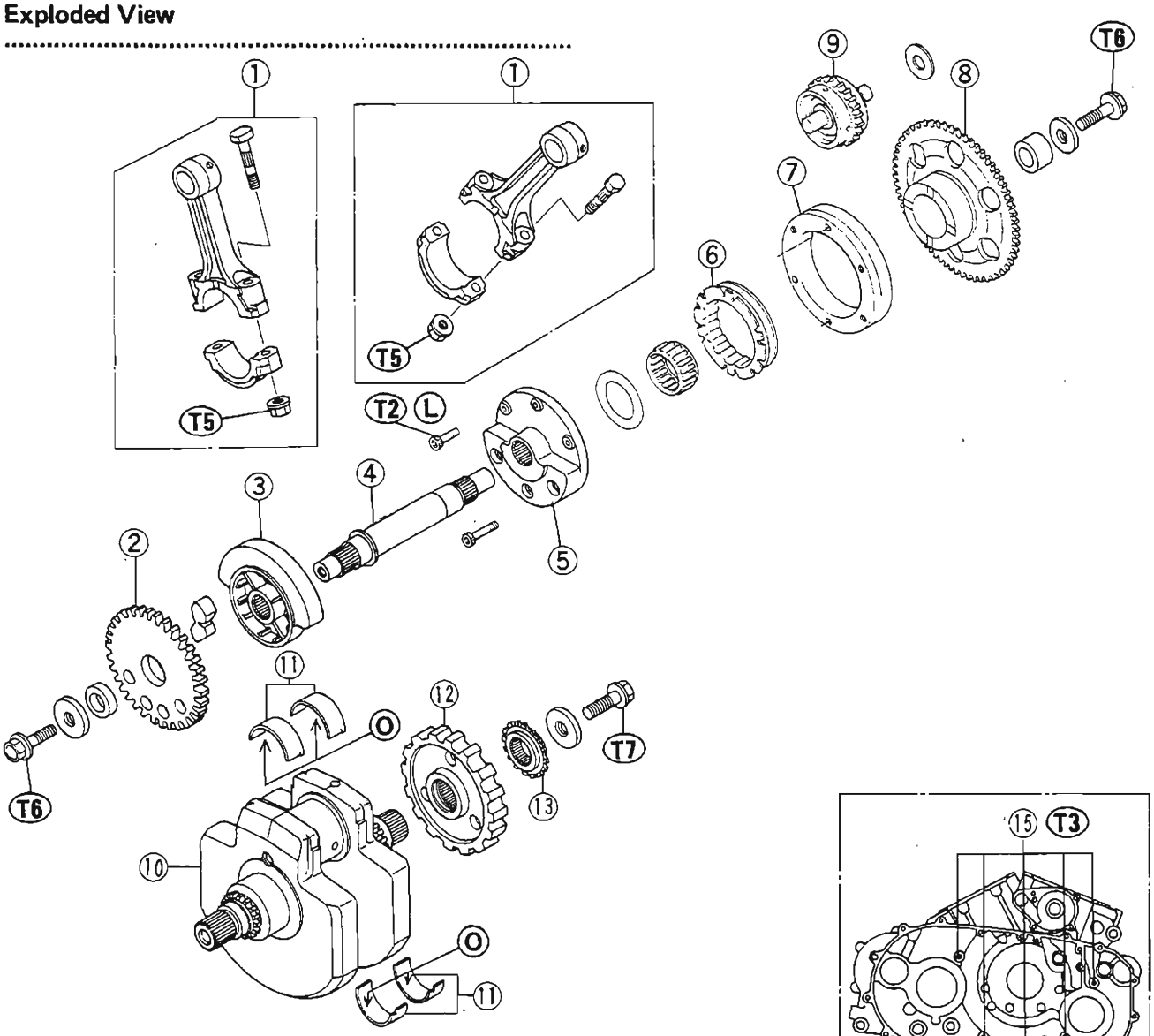

1. Connecting Rod
2. LH Balancer Gear
3. LH Balancer Weight
4. Balancer Shaft
5. RH Balancer Weight
6. One-Way Clutch
7. Coupling
8. Starter Motor Clutch Gear
9. Starter Torque Limiter
10. Crankshaft
11. Bearing Insert
12. Primary Gear
13. Water Pump Drive Sprocket
14. Bolts M6
15. Bolts M8
16. Bolts M10

T1: 8.8 N-m (0.9 kg-m, 78 in-lb)
T2: 15 N-m (1.5 kg-m, 11.0 ft-lb)
T3: 21 N-m (2.1 kg-m, 15.0 ft-lb)
T4: 39 N-m (4.0 kg-m, 29 ft-lb)
T5: 59 N-m (6.0 kg-m, 43 ft-lb)
T6: 93 N-m (9.5 kg-m, 69 ft-lb)
T7: 145 N-m (15.0 kg-m, 110 ft-lb)
L : Apply non-permanent locking agent.
O : Apply engine oil.

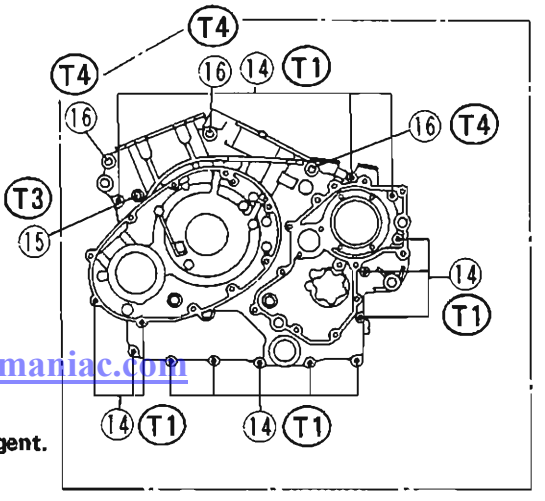

http://manuals.magnamaniac.com/

1. Chain (Water Pump)
2. Idle Shaft Sprocket (A)
3. Chain Guide
4. Idle Shaft
5. Idle Shaft Sprocket (B)
6. Idle Shaft Holder
7. Chain Guide
8. Chain (Water Pump Drive)

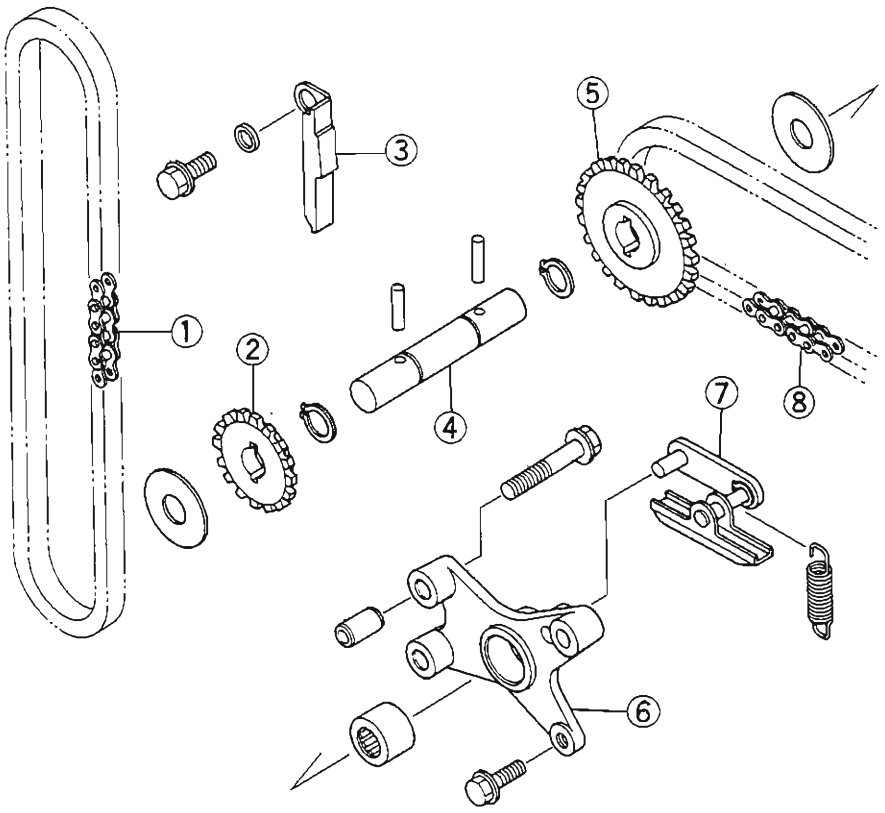

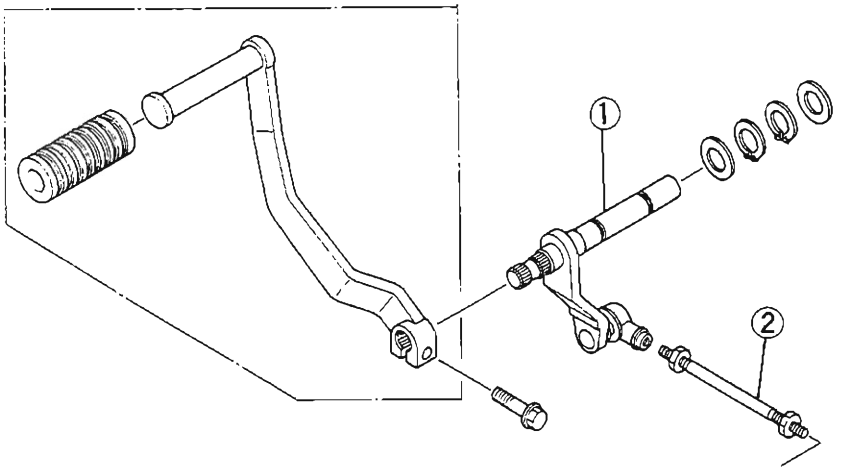

1. Shift Shaft
2. Shift Linkage Rod
3. Shift Mechanism Arm
4. Return Spring Bolt
5. Gear Positioning Lever

L : Apply non-permanent locking agent to the threads.
T1: 8.8 N-m (0.90 kg-m, 78 in-lb)
T2: 21 N-m (2.1 kg-m, 15 ft-lb)

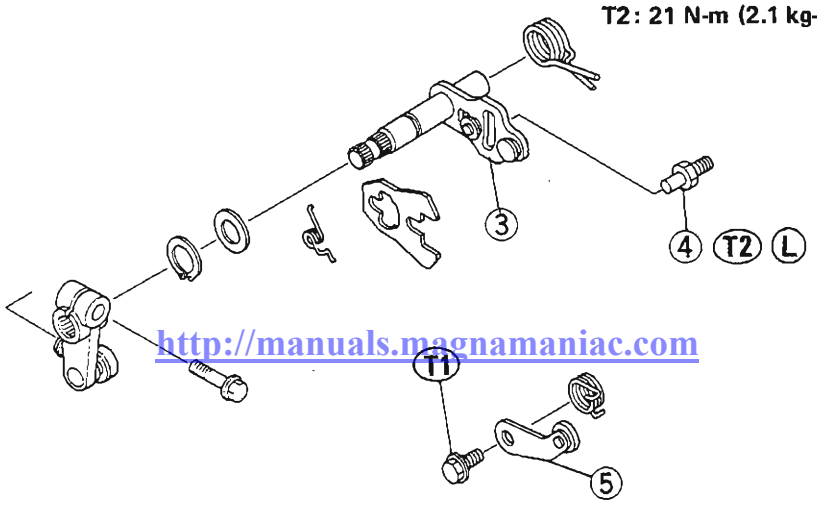

http://manuals.magnamaniac.com

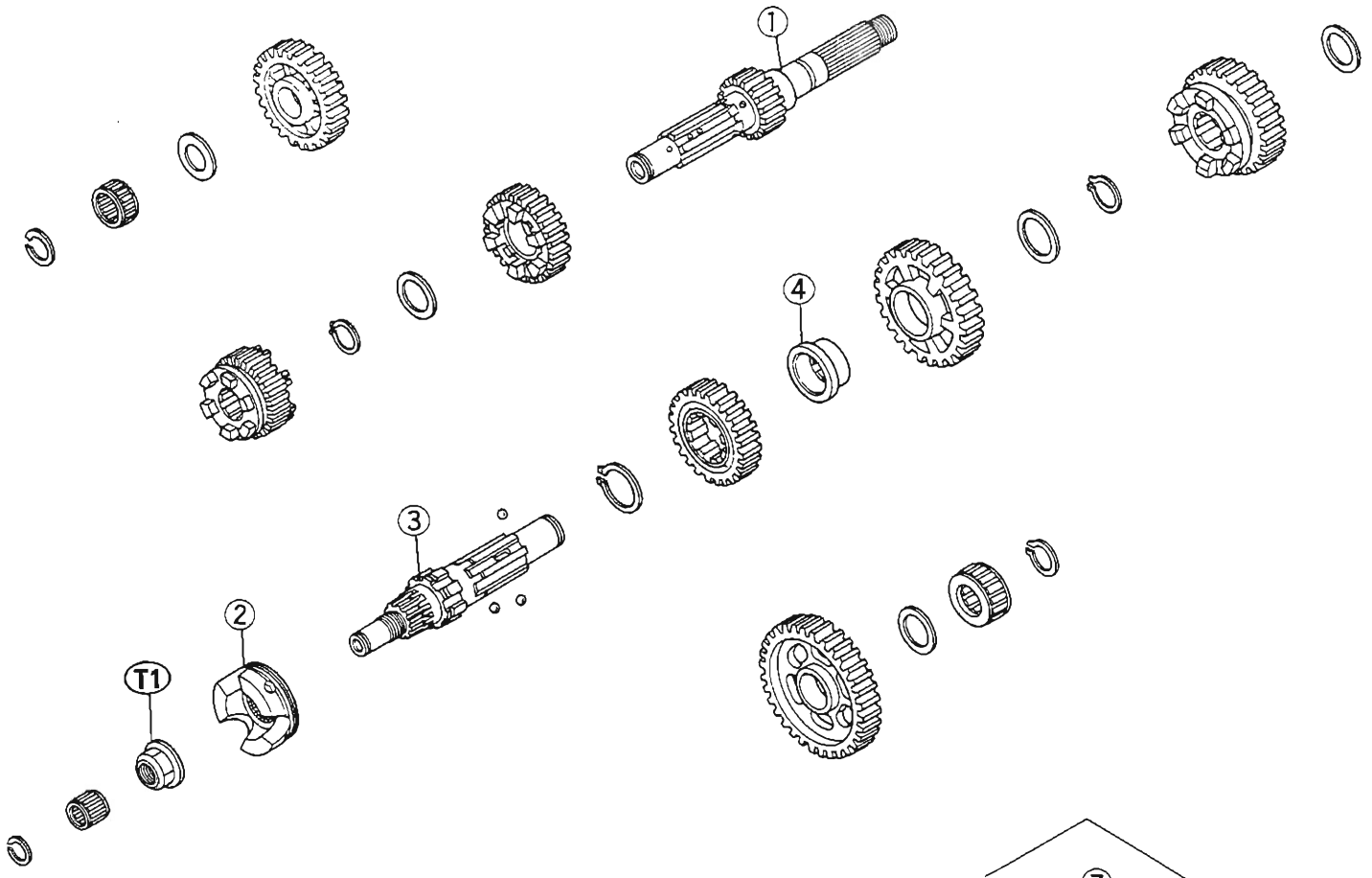

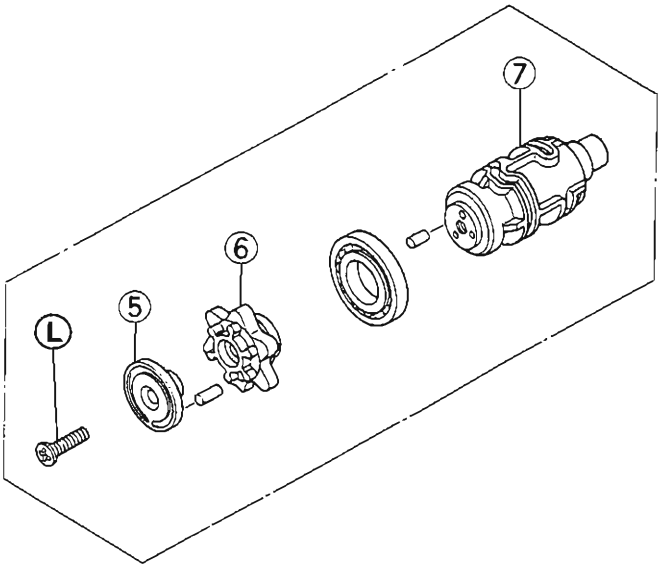

1. Drive Shaft
2. Damper Cam
3. Output Shaft
4. Bushing
5. Pin Plate
6. Bearing Holder
7. Shift Drum

T1 : 225 N-m (23 kg-m, 165 ft-lb)
L : Apply locking agent to the threads.

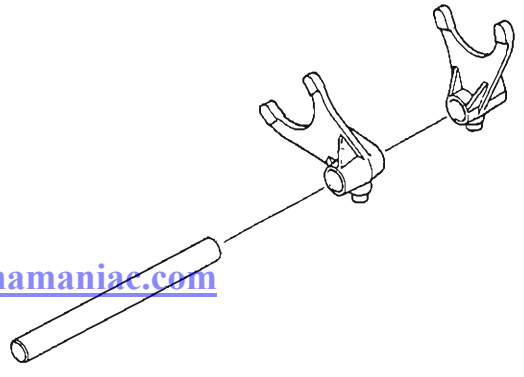

http://manuals.magnamaniac.com

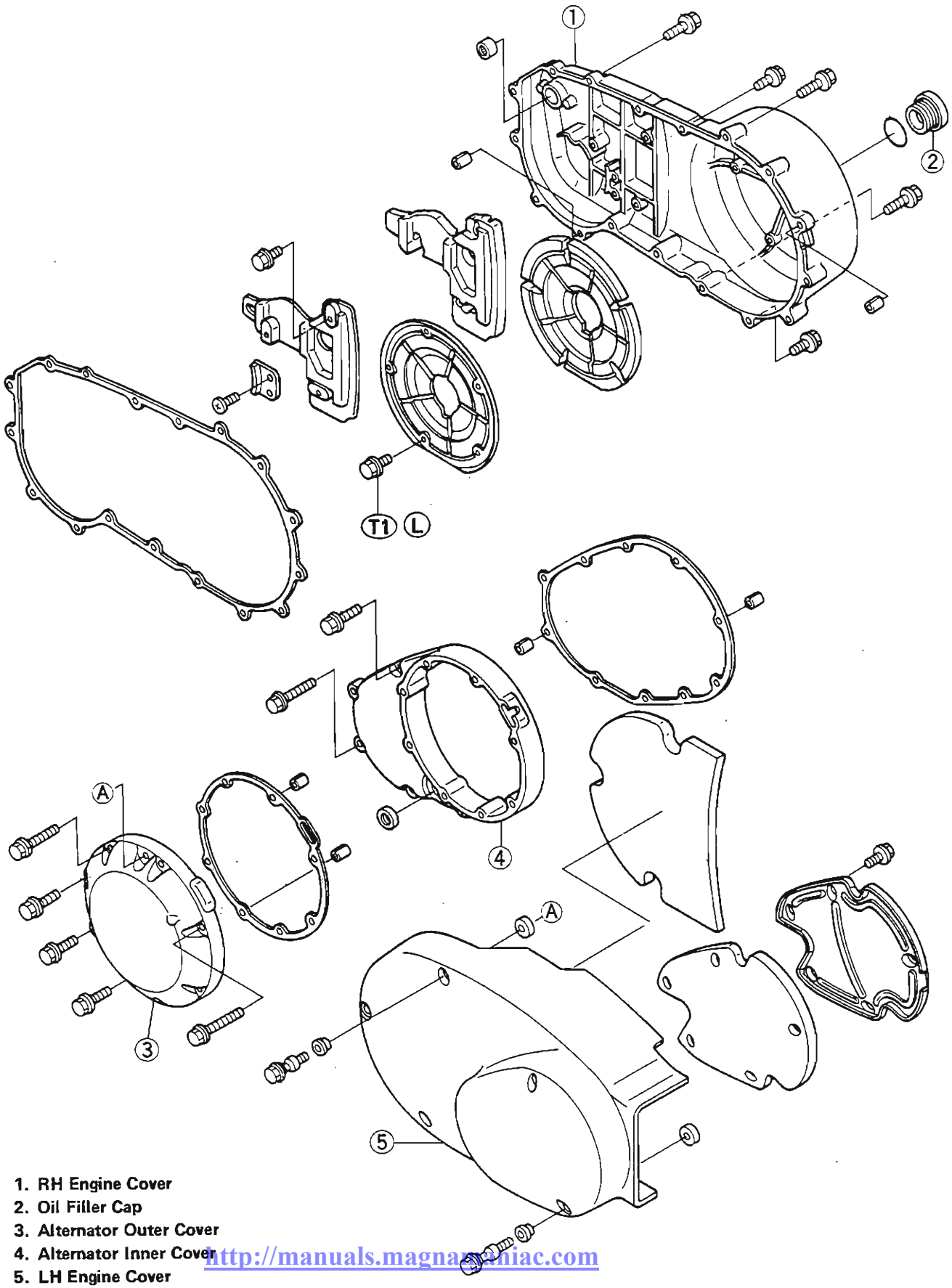

1. RH Engine Cover
2. Oil Filler Cap
3. Alternator Outer Cover
4. Alternator Inner Cover
5. LH Engine Cover

L : Apply locking agent to the threads.

T1: 9.8 N-m (1.0 kg-m, 87 in-lb)

http://manuals.magnamaniac.com

Specifications

Item		Standard	Service Limit
Crankshaft/Connecting Rods:			
Connecting rod big end side clearance		0.16 – 0.46 mm	0.7 mm
Connecting rod big end bearing insert/crankpin clearance		0.026 – 0.057 mm	0.10 mm
Crankpin diameter:		54.981 – 55.000 mm	54.97 mm
Marking	None	54.981 – 54.991 mm	– – –
	○	54.992 – 55.000 mm	– – –
Connecting rod big end bore diameter:		58.000 – 58.020 mm	– – –
Marking	None	58.000 – 58.010 mm	– – –
	○	58.011 – 58.020 mm	– – –
Connecting rod big end bearing insert thickness:	Brown	1.483 – 1.487 mm	– – –
	Black	1.487 – 1.491 mm	– – –
	Blue	1.491 – 1.495 mm	– – –

Connecting rod big end bearing insert selection:

Con-rod Big End Bore Diameter Marking	Crankpin Diameter Marking	Bearing Insert	
		Size Color	Part Number
None	○	Brown	92028-1476
	None	Black	92028-1475
○	○		
	None	Blue	92028-1474

Crankshaft runout	0.02 mm	0.05 mm TIR
Crankshaft main bearing/journal clearance	0.030 – 0.068 mm	0.10 mm
Crankshaft main journal diameter	54.981 – 55.000 mm	54.96 mm
Crankcase main bearing bore diameter	55.030 – 55.049 mm	55.08 mm
Crankshaft side clearance	0.05 – 0.55 mm	0.75 mm
Crankshaft web length	96.85 – 96.95 mm	96.6 mm
Transmission:		
Shift fork ear thickness	5.9 – 6.0 mm	5.8 mm
Gear shift fork groove width	6.05 – 6.15 mm	6.3 mm
Shift fork guide pin diameter	7.9 – 8.0 mm	7.8 mm
Shift drum groove width	8.05 – 8.20 mm	8.3 mm

http://manuals.magnamaniac.com

Special Tools

Circlip Pliers: 57001-144

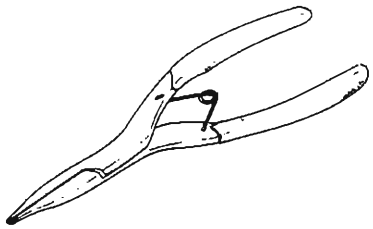

Gear Holder: 57001-1015

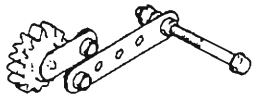

Damper Cam Holder: 57001-1025

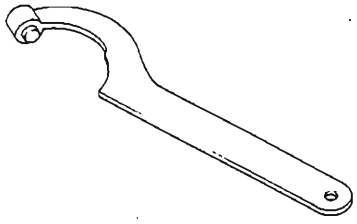

Bearing Driver Set: 57001-1129

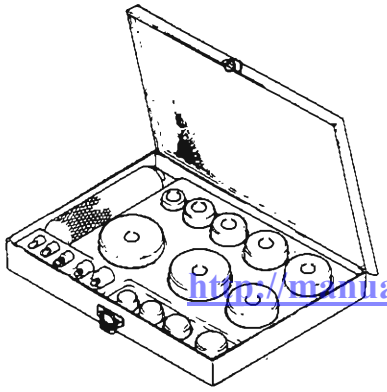

Rotor Holder: 57001-1248

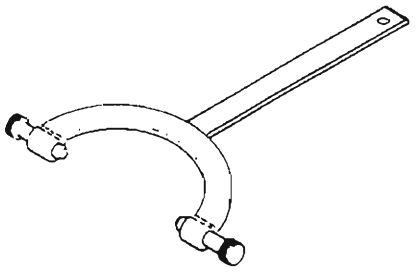

NOTE

○*The flywheel holder (P/N 57001-1313) can be used instead of the rotor holder (P/N 57001-1248).*

Flywheel Holder: 57001-1313

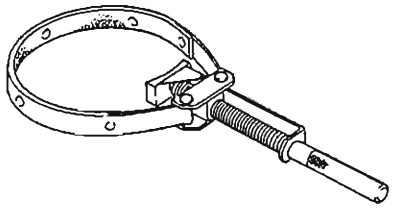

Sealant

Kawasaki Bond (Liquid Gasket-Silber): 92104-1003

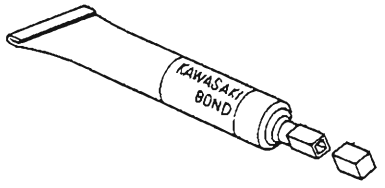

http://manuals.magnamaniac.com

Crankcase

Splitting

- Remove the engine (see Engine Removal/Installation chapter).
- Set the engine on a clean surface and hold the engine steady while parts are being removed.
- Remove the following.

Engine Top
- Rocker Cases
- Cylinder Heads
- Cylinders Blocks
- Pistons

Engine Right Side
- Water Pump
- Clutch

Engine Left Side
- Front Bevel Gear Case
- Alternator Inner Cover

- Remove the shift mechanism arm and gear positioning lever with spring.

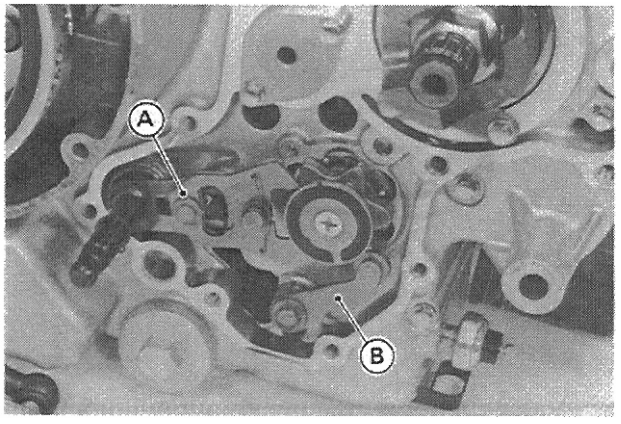

A. Shift Mechanism Arm B. Gear Positioning Lever

- Unscrew the damper cam nut using a damper cam holder (special tool) and deep socket wrench.
- Remove the retainer and needle bearing.
- Insert the bolt (ϕ12 mm, L100 mm) into the engine mounting bolt hole.

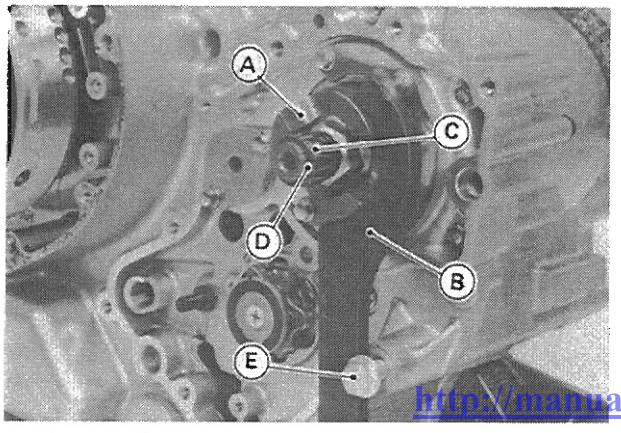

A. Damper Cam
B. Holder: 57001-1025
C. Needle Bearing
D. Retainer
E. Bolt

- Pull the starter motor clutch gear out of the starter motor clutch, then take out the torque limiter.
- Loosen the starter motor clutch bolt while holding the alternator rotor steady with rotor holder (special tool: 57001-1248).

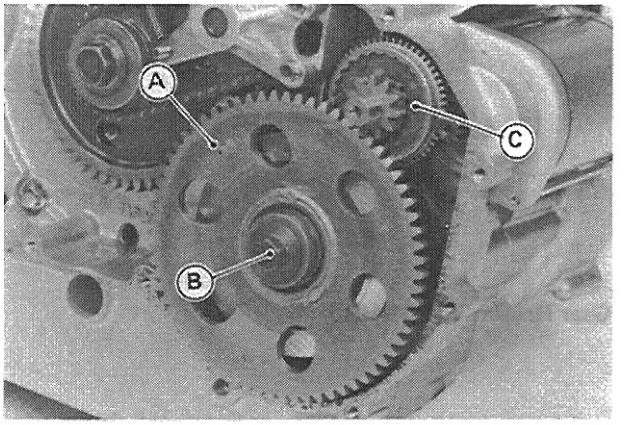

A. Starter Motor Clutch Gear
B. Bolt
C. Torque Limiter

- Take the bolt, spacer, collar, needle bearing, copper washer and starter motor clutch off the balancer shaft.

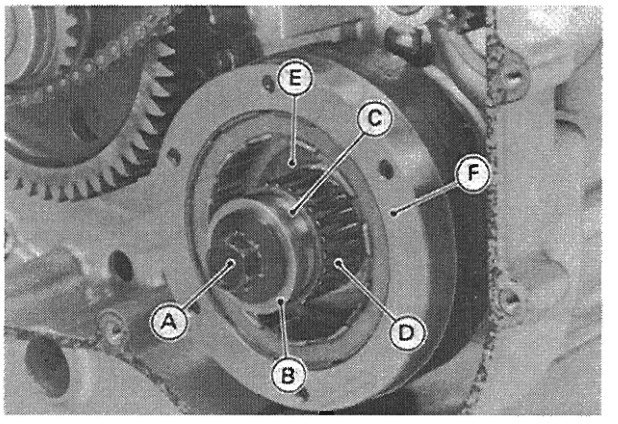

A. Bolt
B. Spacer
C. Collar
D. Bearing
E. Washer
F. Starter Motor Clutch

http://manuals.magnamaniac.com

- Loosen the primary gear bolt while holding the alternator rotor steady with the rotor holder (special tool: 57001-1248).

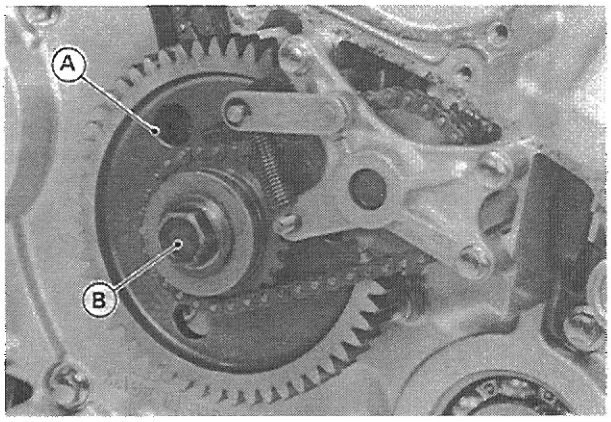

A. Primary Gear B. Bolt

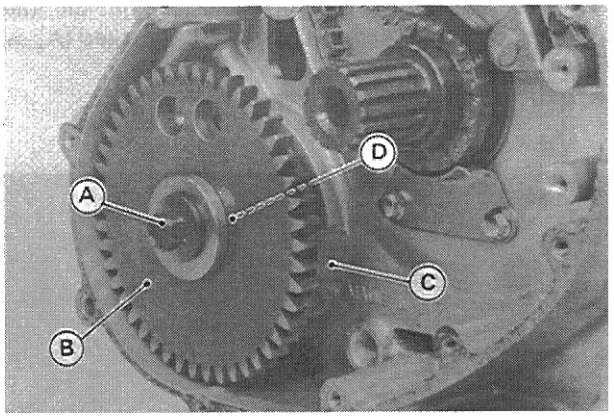

A. Bolt C. Balancer Weight
B. Balancer Gear D. Spacer

●Remove the front chain guide, lower chain guide, and rear chain guide from the left hand crankcase.

●Loosen the balancer gear bolt by using the rotor holder (special tool).

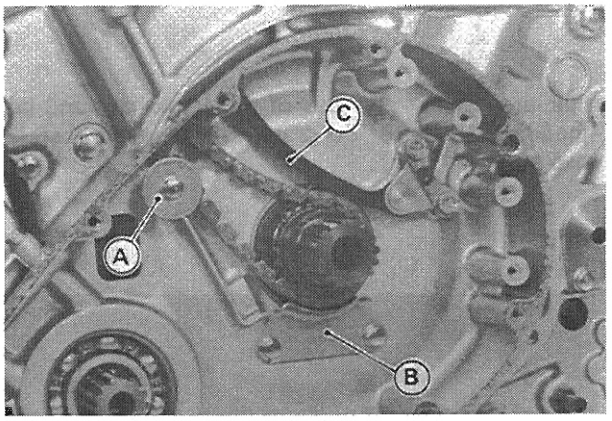

A. Front Chain Guide C. Rear Chain Guide
B. Lower Chain Guide

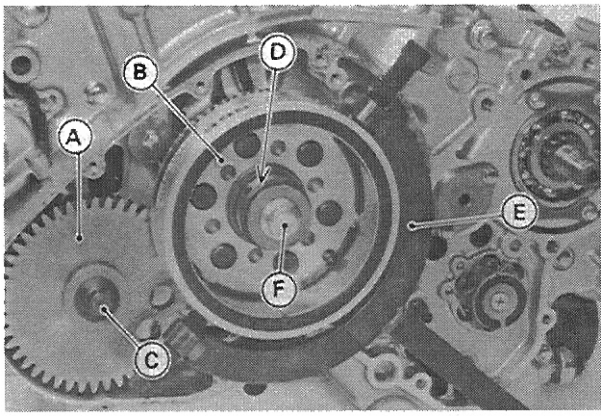

A. Balancer Gear D. Ratchet
B. Alternator Rotor E. Rotor Holder: 57001-1248
C. Balancer Gear Bolt F. Alternator Rotor Bolt

●Remove the chain guide and idle shaft holder from the right hand crankcase.

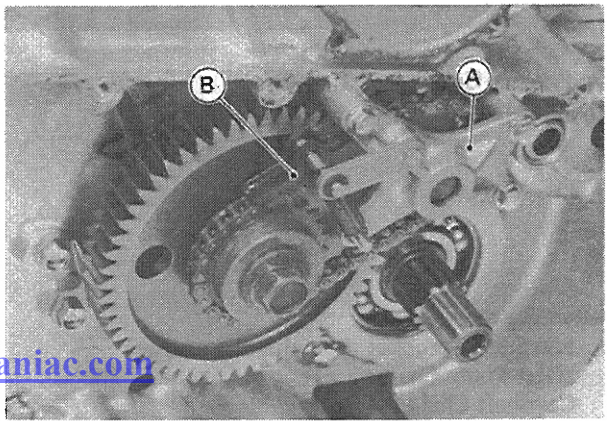

A. Idle Shaft Holder B. Chain Guide

●Remove the alternator rotor bolt by using the rotor holder (special tool: 57001-1248).
●Take the alternator rotor with spacer and ratchet off the crankshaft.
●Remove the balancer gear bolt, and take the balancer gear, spacer, and balancer weight off the balancer shaft as a set.

http://manuals.magnamaniac.com

●Remove the primary gear bolt and take out the water pump drive sprocket and idle shaft sprocket (A) as a set.

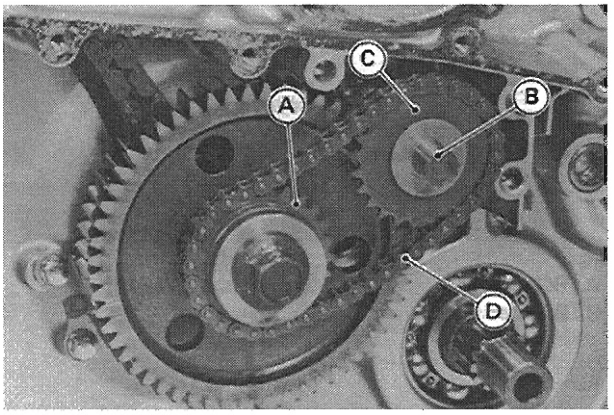

A. Water Pump Drive Sprocket
B. Idle Shaft
C. Sprocket (A)
D. Chain

●Pull the primary gear out of the crankshaft, and take the idle shaft out of the crankcase. The idle shaft has two pins.

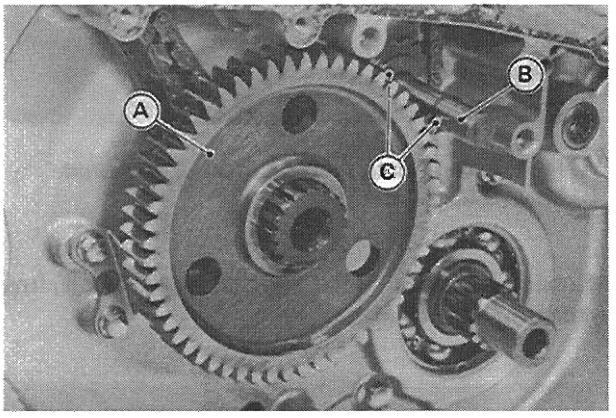

A. Primary Gear
B. Idle Shaft
C. Pins

●Remove the following.
Idle Shaft Sprocket (B) (with flat washer)
Water Pump Chain
Camshaft Chain
Lower Chain Guide
Rear Chain Guide

http://manuals.magnamaniac.com

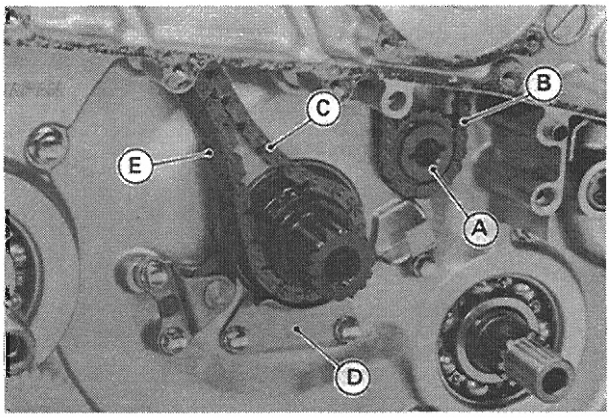

A. Sprocket (B)
B. Water Pump Chain
C. Camshaft Chain
D. Lower Chain Guide
E. Rear Chain Guide

●Pull the water pump sprocket with its shaft out of the inside of the crankcase.

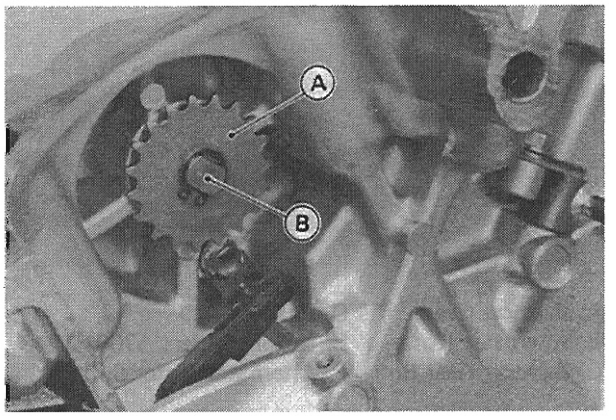

A. Sprocket
B. Shaft

●Remove the starter motor bolts and the motor out of the crankcase.

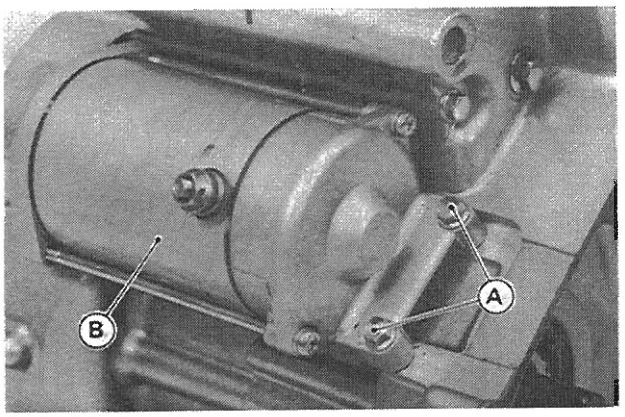

A. Bolts B. Starter Motor

●Remove the crankcase bolts (Right Side).

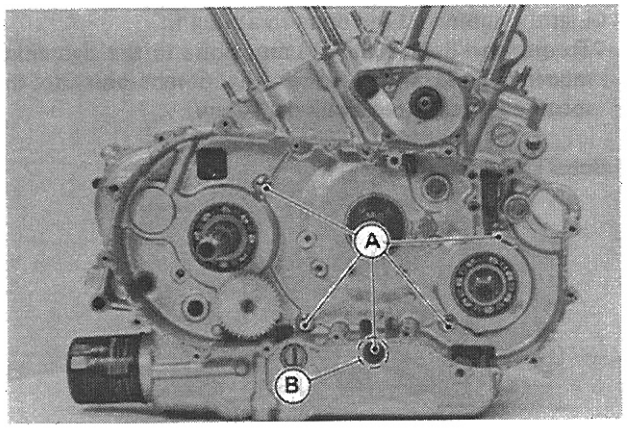

A. ϕ8 mm Bolts (5)
B. Do not forget to remove this bolt.

●Remove all the crankcase bolts (Left Side).

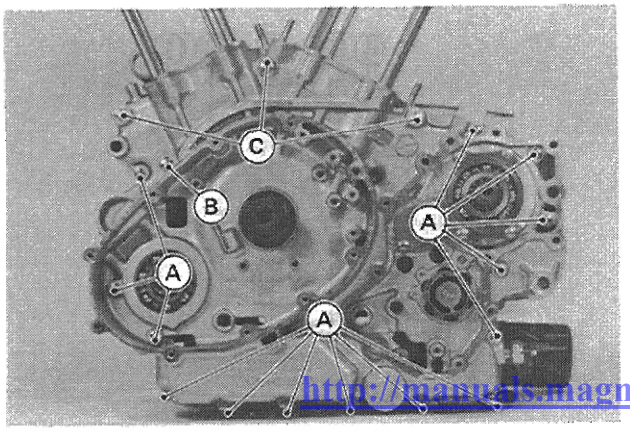

A. ϕ6 mm Bolts (14) C. ϕ10 mm Bolts (3)
B. ϕ8 mm Bolts (1)

●Using the pry points, split the crankcase halves.

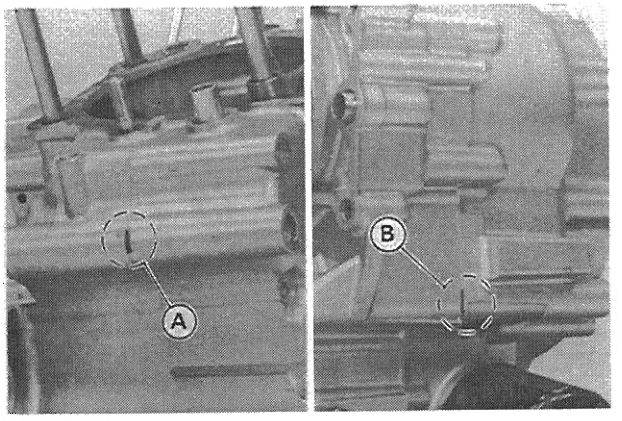

A. Pry Point (Front) B. Pry Point (Rear)

●Turn the crankcase LH side down.
●Lift off the RH crankcase half.
●Remove the following from the LH crankcase half.
Crankshaft
Transmission Gears
Shift Drum

Assembly

●Note the following before fitting the crankcase halves.
○With a high flash-point solvent, clean off the mating surface of the crankcase halves and wipe dry.
○Using compressed air, blow out the oil passages in the crankcase halves.
○Install the shift drum and set the gear positioning lever to the neutral position.

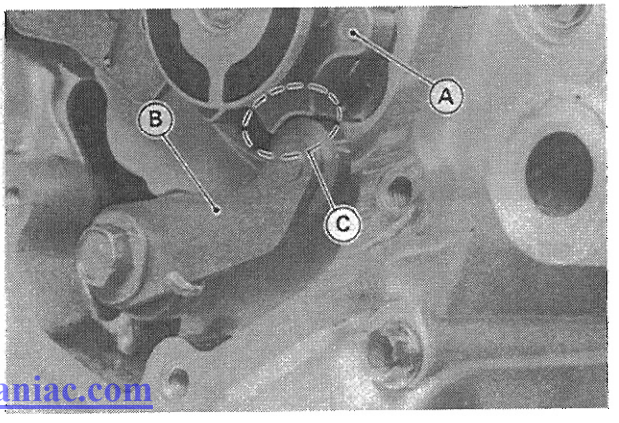

A. Shift Drum Pin Plate C. Neutral Position
B. Gear Positioning Lever

http://manuals.magnamaniac.com

○Apply engine oil to the transmission gears, ball bearings, shift drum, and crankshaft main bearing inserts.
○Check to see that the following parts are in place in the LH crankcase half.

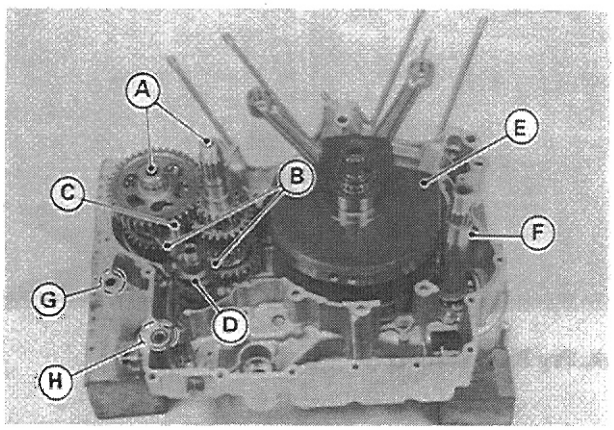

A. Transmission Gears
B. Shift Forks
C. Shift Rod
D. Shift Drum
E. Crankshaft
F. Balancer Shaft
G. Knock Pin
H. O-ring

○Check to see that the following parts are in place in the RH crankcase half.

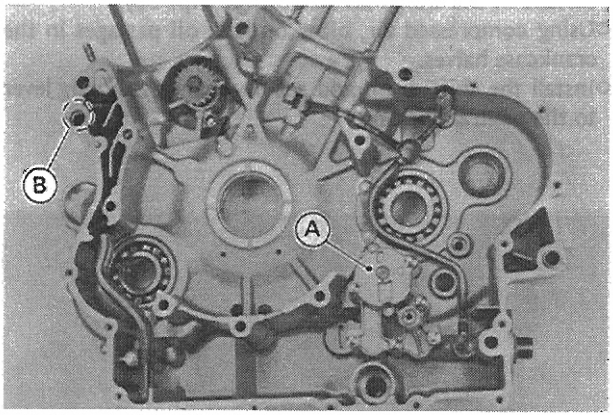

A. Oil Pump
B. Knock Pin

○Apply liquid gasket to the mating surface of the RH crankcase half.

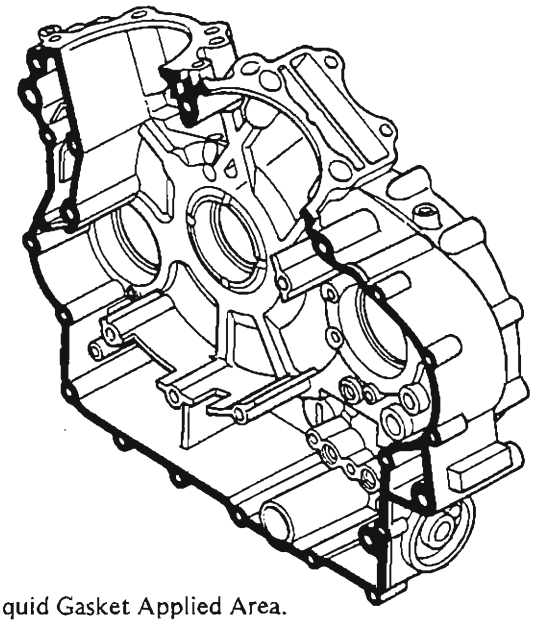

■: Liquid Gasket Applied Area.

●Tighten the crankcase bolts as follows.
○Lightly tighten all the bolts to a snug fit.
○Torque the 8 mm and 10 mm bolts to the tightening sequence, and then tighten the 6 mm bolts to the specified torque (see Exploded View).

Bolts Tightening Order

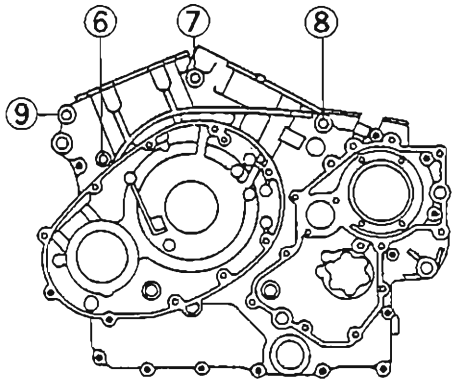

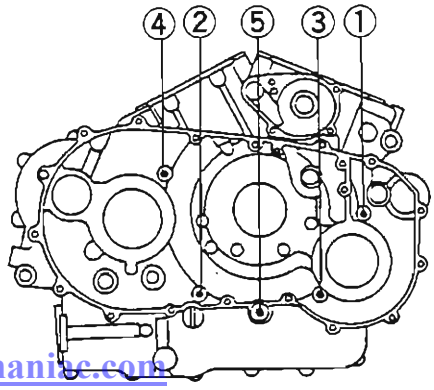

http://manuals.magnamanine.com

●After tightening all the crankcase bolts, check the following items.
○Turn the RH crankcase half down, and check that the drive shaft and output shaft turn freely.
○Be sure the neutral finder operates properly (while slowly spinning the output shaft, gears can be shifted from neutral to 1st gear and 1st to neutral).
○Check that the gears shift smoothly from neutral to 4th gear, and 4th to neutral, while rapidly spinning the output shaft.

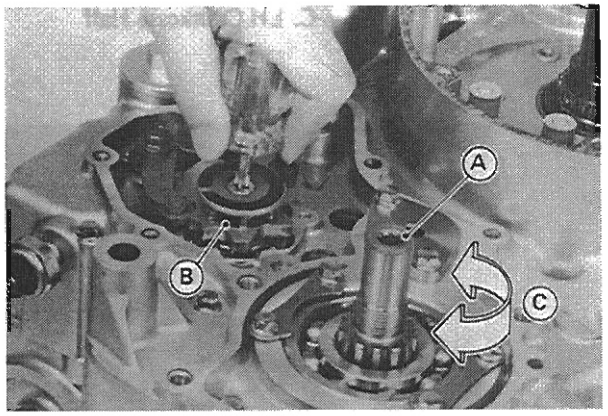

A. Output Shaft
B. Shift Drum
C. Rapidly Spinning

●Install the following
Engine Left Side
Camshaft Chain and Chain Guide
LH Balancer Weight
Alternator Rotor

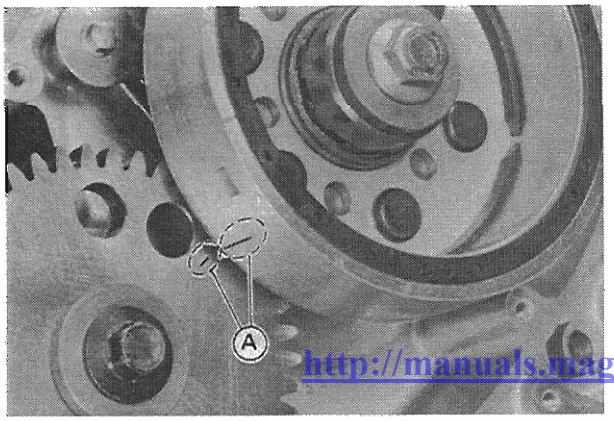

A. Marks Aligned

Engine Right Side
Camshaft Chain and Chain Guides
Starter Motor Clutch (RH Balancer)
Idle Shaft Sprocket (B)

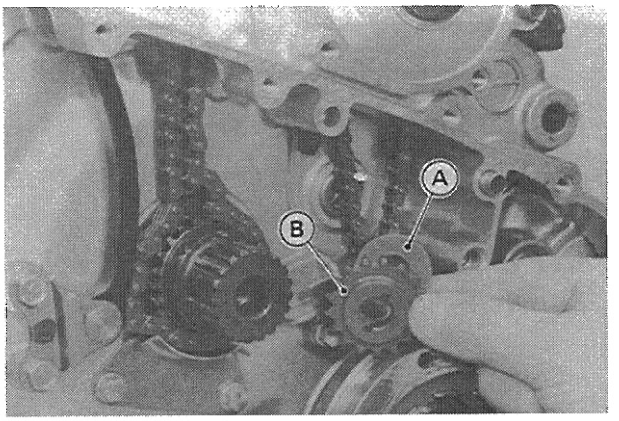

A. Washer
B. Sprocket (B)

Primary Gear

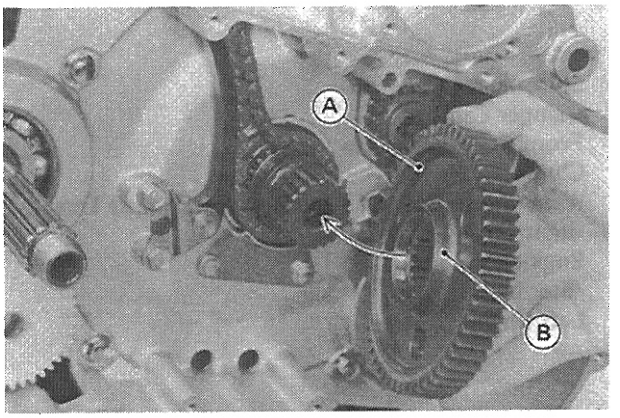

A. Primary Gear
B. Notched Side

Idle Shaft
Idle Shaft Sprocket (A), Water Pump Drive Sprocket, and chain as a set.

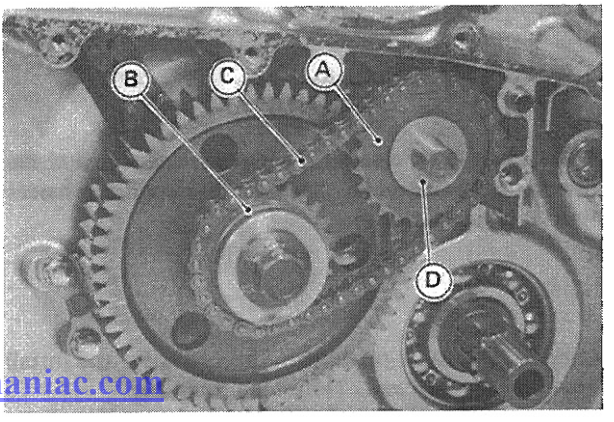

A. Sprocket (A)
B. Water Pump Drive Sprocket
C. Chain
D. Washer

http://manuals.magnamaniac.com

Idle Shaft Holder and Chain Guide
Torque Limiter
Starter Motor Clutch Gear



A. Torque Limiter
B. Idle Shaft Holder
C. Chain Guide
D. Starter Motor Clutch Gear
E. Turn Clockwise

Shift Mechanism
Damper Cam
Front Bevel Gear Case
Clutch
Water Pump (Impeller Bolt has Left-handed Threads)
Right Engine Cover
Engine Top End
Alternator Covers
Left Engine Cover

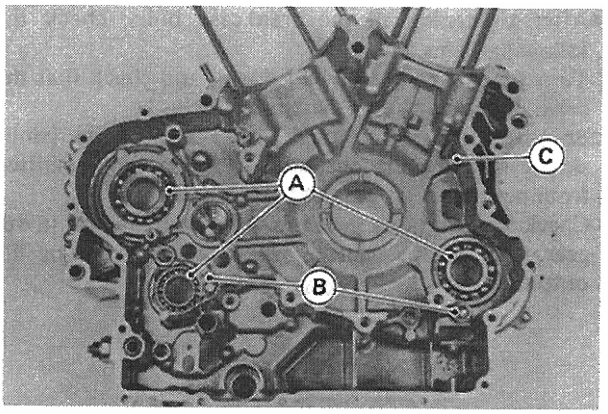

A. Bearings
B. Holding Plates
C. LH Crankcase Half

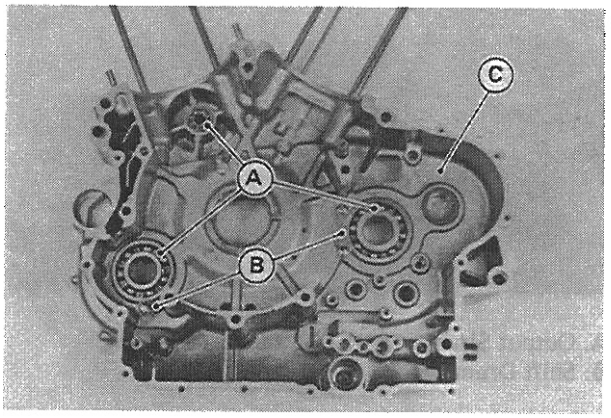

A. Bearings
B. Holding Plates
C. RH Crankcase Half

Replacement

CAUTION

○**The left and right crankcase halves are machined at the factory in the assembled state, so the crankcase halves must be replaced as a set.**

●Remove the usable parts from the old case, and install them on the new cases. Note the following.
○After removing the bearing holding plates, install the ball bearings with new ones using a bearing driver set (special tool: 57001-1129).

○Apply non-permanent locking agent to the threads of the shift return spring bolt, and tighten it to the specified torque (see Exploded View).
○Apply silicone sealant to the threads of the oil pressure switch, and tighten it to the specified torque (see Exploded View).

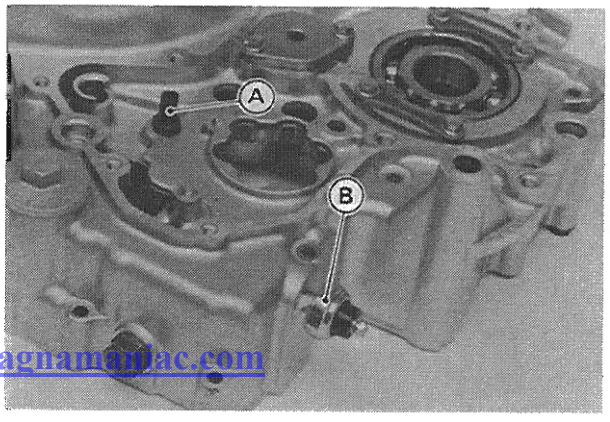

A. Shift Return Spring Bolt
B. Oil Pressure Switch

http://manuals.magnamaniac.com

○Replace the water pump shaft bearings and oil seal with new ones. Press the oil seal into the RH crankcase half from the inside of the case.

NOTE

○*Apply high temperature grease to the lips of the water pump shaft oil seal.*

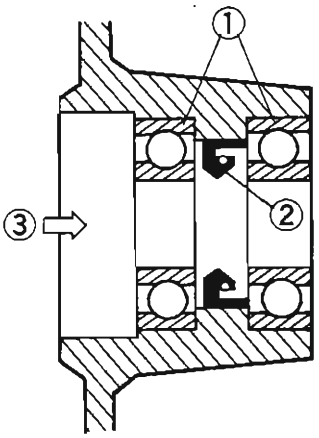

1. Bearings
2. Oil Seal
3. Press the oil seal.

○Tighten the engine oil drain plug to the specified torque (see Exploded View).

Crankshaft/Connecting Rods

Crankshaft Installation

●The crankshaft LH end is longer than the RH end.

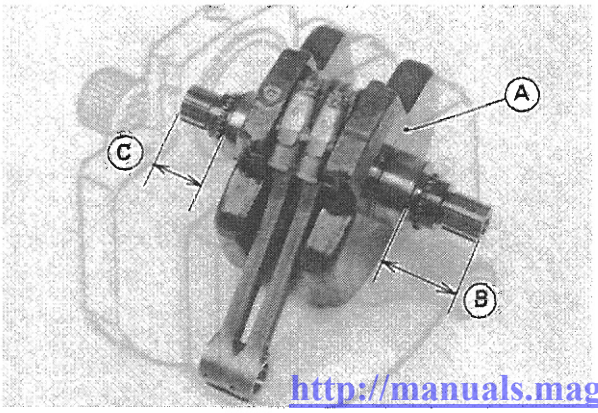

http://manuals.magnamaniac.com

A. Crankshaft
B. Long End (LH)
C. Short End (RH)

Connecting Rod Removal

●Remove the crankshaft.
●Remove the connecting rods from the crankshaft.

NOTE

○*Mark and record the locations of the connecting rods and their big end caps so that they can be re-assembled in their original positions.*

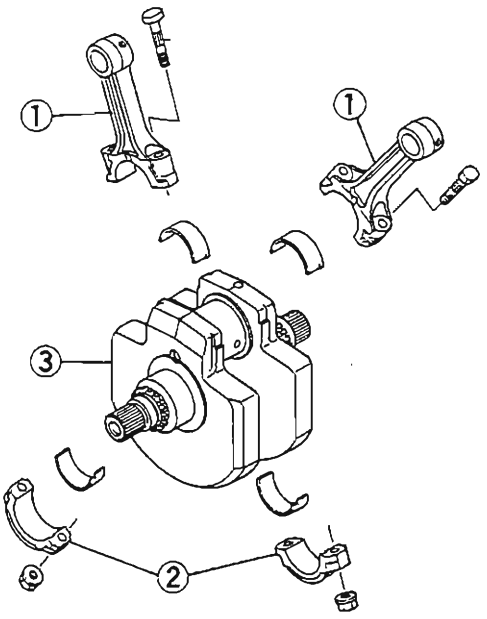

1. Connecting Rods
2. Big End Caps
3. Crankshaft

●Remove the connecting rod big end cap nuts, and take off the rod and cap with the bearing inserts.

Connecting Rod Installation

CAUTION

○**To minimize vibration, the connecting rods should have the same weight mark.**

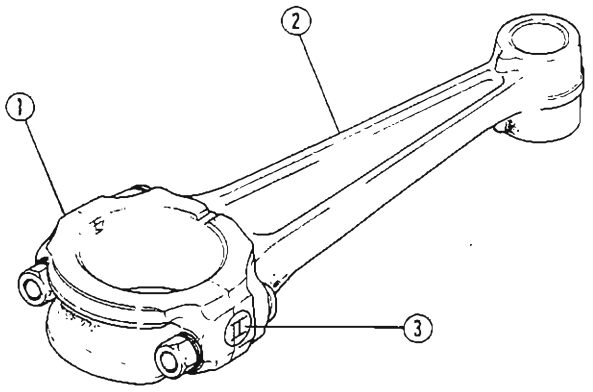

1. Big End Cap
2. Connecting Rod
3. Weight Mark, Alphabet

CAUTION

○If the connecting rods, bearing inserts, or crankshaft are replaced with new ones, select the bearing insert and check clearance with a plastigage before assembling engine to be sure the correct bearing inserts are installed.

●Apply engine oil to the big end bearing inserts.
●Tighten the big end cap nuts to the specified torque (see Exploded View).

Connecting Rod Big End Bearing Insert/Crankpin Wear

●Measure the bearing insert/crankpin clearance with plastigage.

NOTE

○Tighten the big end cap nuts to the specified torque (see Exploded View).
○Do not move the connecting rod and crankshaft during clearance measurement.

Connecting Rod Big End
Bearing Insert/Crankpin Clearance

Standard:	**0.026 – 0.057 mm**
Service Limit:	**0.10 mm**

★If clearance is within the standard, no bearing replacement is required.
★If clearance is between 0.057 mm and the service limit (0.10 mm), replace the bearing inserts with inserts painted blue. Check insert/crankpin clearance with plastigage. The clearance may exceed the standard slightly, but it must not be less than the minimum in order to avoid bearing seizure.
★If clearance exceeds the service limit, measure the diameter of the crankpins.

Crankpin Diameter

Standard:	**54.981 – 55.000 mm**
Service Limit:	**54.97 mm**

★If any crankpin has worn past the service limit, replace the crankshaft with a new one.
★If the measured crankpin diameters are not less than the service limit, but do not coincide with the original diameter markings on the crankshaft, make new marks on it.

Crankpin Diameter Marks

None:	**54.981 – 54.991 mm**
○ :	**54.992 – 55.000 mm**

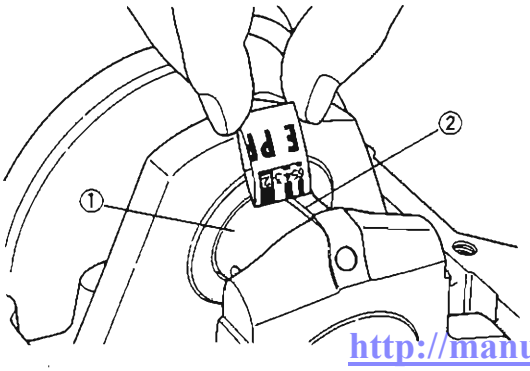

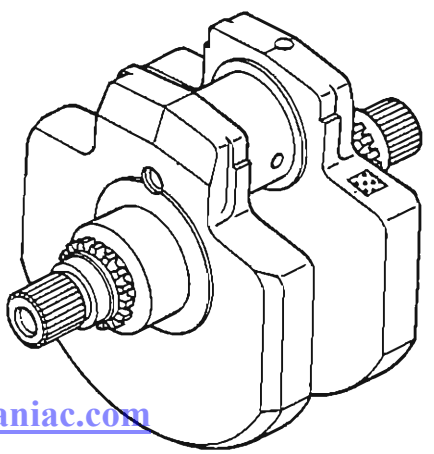

1. Crankpin
2. Plastigage

▨ :Crankpin Diameter Marks, "○" mark or no mark

http://manuals.magnamaniac.com

●Measure the connecting rod big end inside diameter, and mark each connecting rod big end in accordance with the inside diameter.

NOTE

○*Tighten the cap nuts to the specified torque (see Exploded View).*
○*The mark already on the big end should almost coincide with the measurement.*

Connecting Rod Big End Inside Diameter Marks

None:	**58.000 – 58.010 mm**
○ :	**58.011 – 58.020 mm**

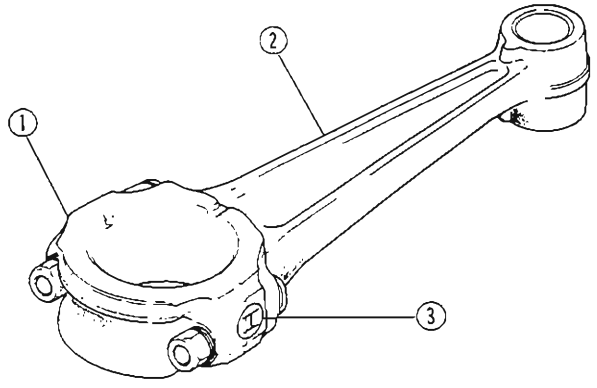

1. Big End Cap
2. Connecting Rod
3. Diameter Mark, "O" mark or no mark

●Select the proper bearing insert in accordance with the combination of the connecting rod and crankshaft coding.

Big End Bearing Insert Selection

Con-rod Big End Bore Diameter Marking	Crankpin Diameter Mark	Bearing Insert	
		Size Color	Part Number
○	None	Blue	92028-1474
None	None	Black	92028-1475
○	○		
None	○	Brown	92028-1476

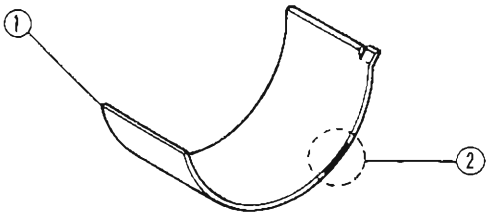

1. Bearing Insert
2. Color Size Mark

●Install the new inserts in the connecting rod and check insert/crankpin clearance with the plastigage.

Crankshaft Runout

●Measure the crankshaft runout.
★If the measurement exceeds the service limit, replace the crankshaft.

Crankshaft Runout

Standard:	**0.02 mm**
Service Limit:	**0.05 mm TIR**

Crankshaft Runout

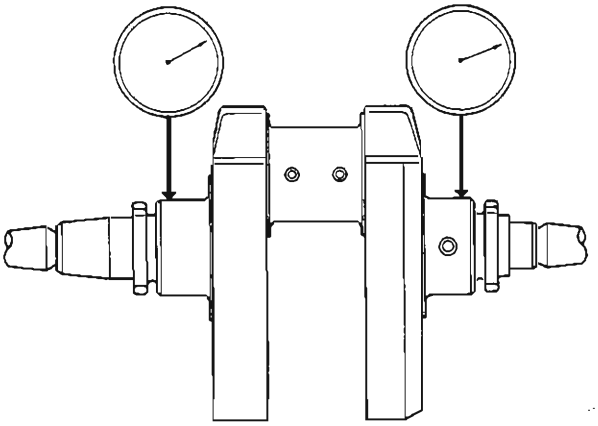

Crankshaft Main Bearing/Main Journal Wear

●Measure the diameter of the crankshaft main journal.

http://manuals.magnamaniac.com

Crankshaft Main Journal Diameter

Standard:	**54.981 – 55.000 mm**
Service Limit:	**54.96 mm**

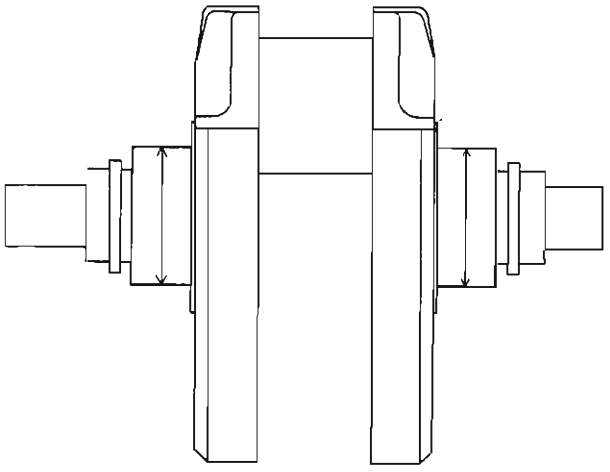

★If any journal has worn past the service limit, replace the crankshaft with a new one.

●Measure the main bearing bore diameter in the crankcase halves.

Crankcase Main Bearing Bore Diameter

Standard: **55.030 – 55.049 mm**
Service Limit: **55.08 mm**

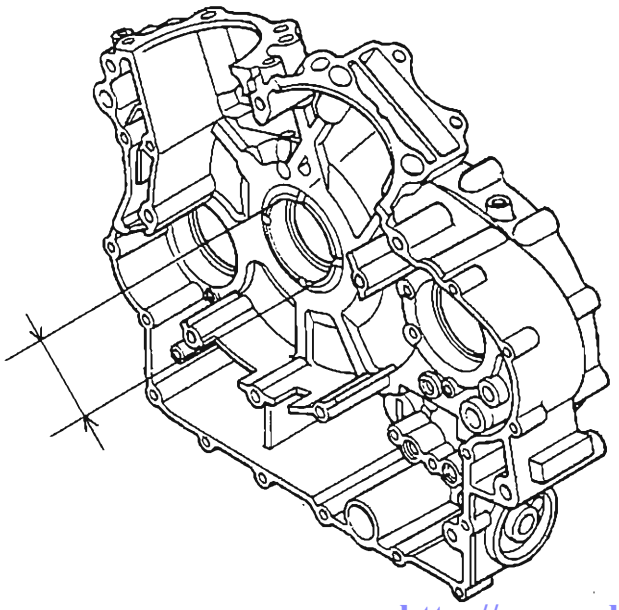

★If they are any signs of seizure, damage, or excessive wear, replace the crankcase halves as a set.

Crankshaft Side Clearance

●Measure crankshaft side clearance.

Crankshaft Side Clearance.

Standard: **0.05 – 0.55 mm**
Service Limit: **0.75 mm**

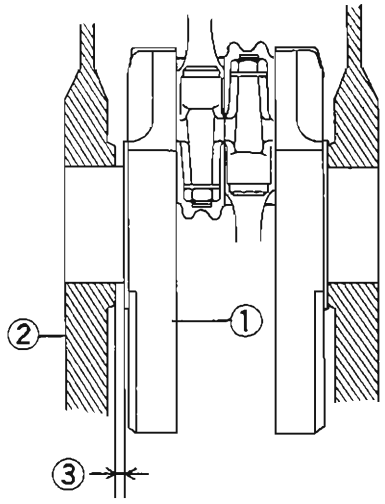

1. Crankshaft
2. Crankcase
3. Clearance

★If the clearance is greater than the service limit, measure the crankshaft web length to see whether the crankshaft or the crankcase is faulty.

Crankshaft Web Length

Standard: **96.85 – 96.95 mm**
Service Limit: **96.6 mm**

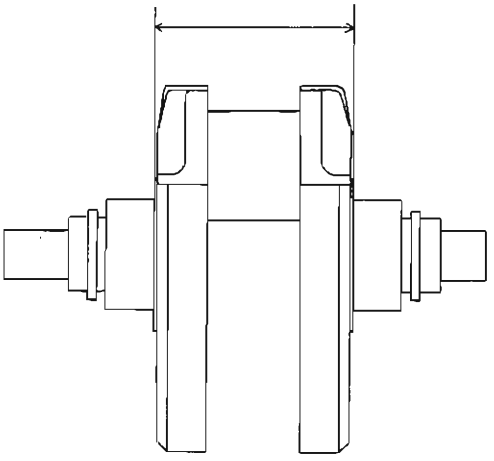

★If the length measurement is smaller than the service limit, replace the crankshaft. Otherwise, replace the crankcase halves as a set.

http://manuals.magnamaniac.com

NOTE

○*The right and left crankcase halves are machined at the factory in the assembled state, so they must be replaced as a set.*

Right Engine Cover

Removal

●Remove the muffler (see Engine Top End chapter).
●Remove the right down tube (see Frame chapter).
●Remove the cover bolts.
●Using the tap points, take the cover off the crankcase.

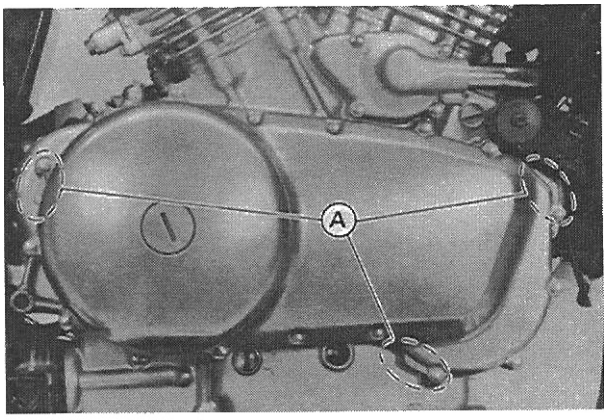

A. Tap Here

Installation

●Note the following.
○Replace the right engine cover gasket with a new one.
○Route the hoses and the wires correctly (see General Information).
Rear Brake Hoses
Rear Brake Light Switch Wire
Air Cleaner Drain Hose

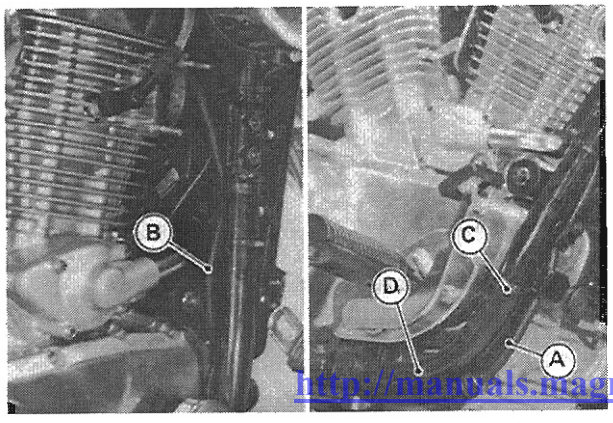

A. Drain Hose
B. Brake Light Switch Wire
C. Strap
D. Clamp

Left Engine Cover

Installation

●Note the following.
○Before installing the left engine cover, apply grease to the back of the dampers and attach them onto the alternator outer cover.

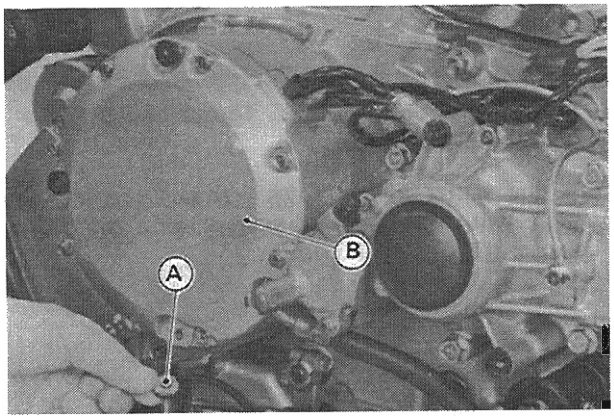

A. Damper
B. Alternator Outer Cover

○Install the left engine cover above the engine bracket.

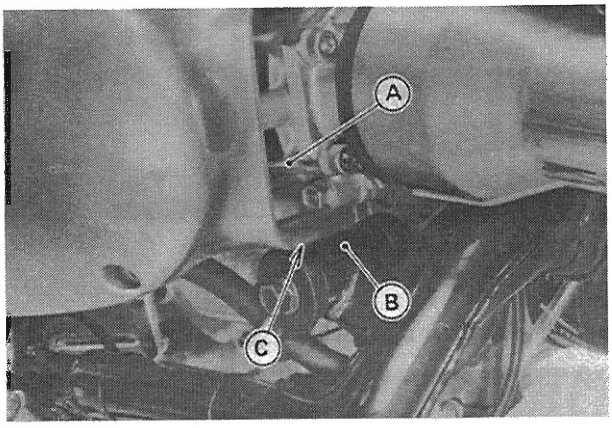

A. Front Bevel Gear Case
B. Engine Bracket
C. Cover End

Starter Motor Clutch

Removal

●Remove the right down tube (see Frame chapter).
●Remove the right engine cover.
●Unscrew the starter motor clutch bolt while holding the primary gear bolt.

http://manuals.magnamaniac.com

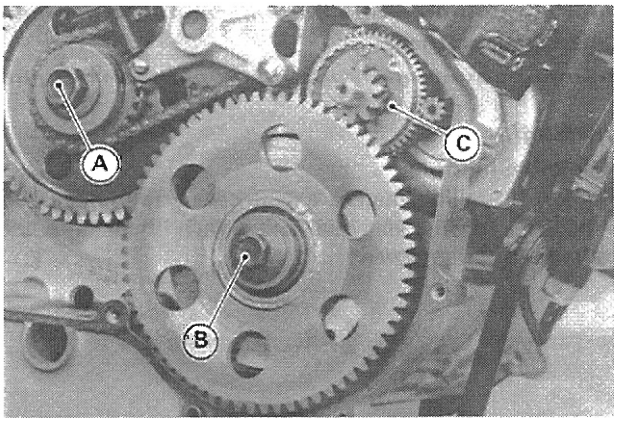

A. Primary Gear Bolt C. Torque Limiter
B. Starter Motor Clutch Bolt

●Pull the starter motor clutch gear and starter motor clutch (with RH balancer weight) as a set off the balancer shaft.

Installation

●Note the following.
○Install the caller and copper washer as shown.

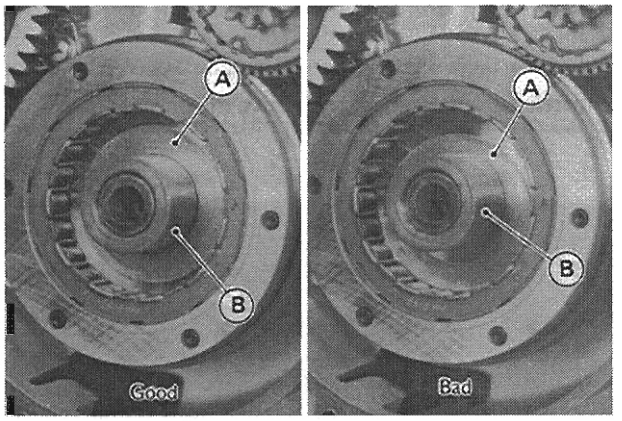

A. Copper Washer B. Caller

○Install the starter motor clutch gear as shown.

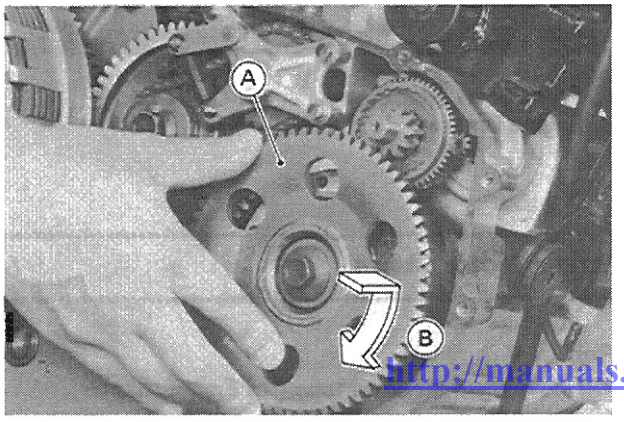

A. Starter Motor Clutch Gear
B. Push and turn clockwise.

○Apply oil to the threads of the starter motor clutch bolt and tighten it to the specified torque (see Exploded View) while holding the primary gear bolt.

Disassembly

●Remove the starter motor clutch assembly.
●Remove the Allen bolts with the balancer held in a vise.

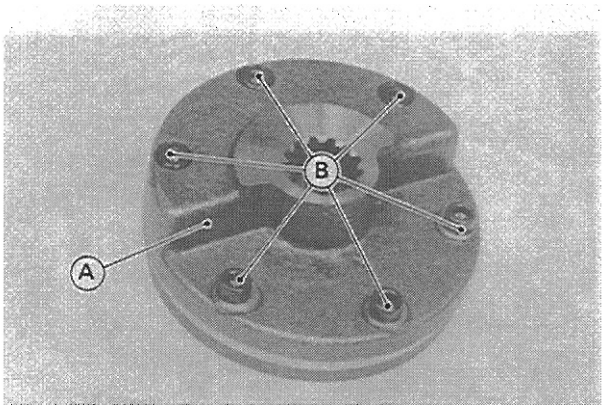

A. Balancer Weight B. Allen Bolts

●Pull the coupling out of the balancer.
●Take the one-way clutch out of the coupling.

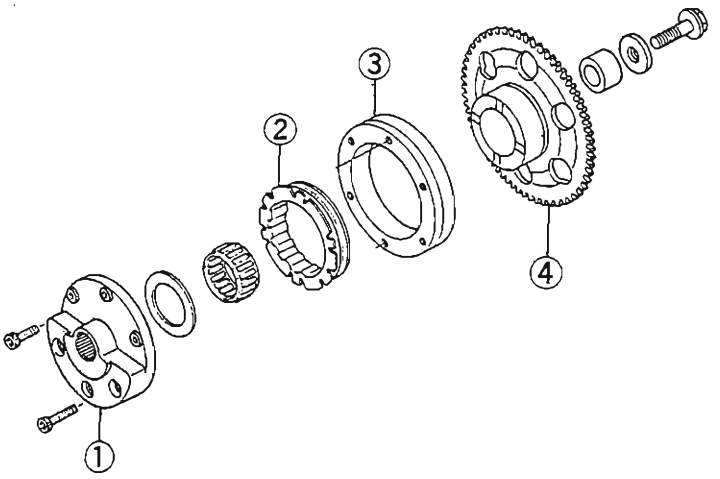

1. Balancer Weight
2. One-way Clutch
3. Coupling
4. Starter Motor Clutch Gear

http://manuals.magnamaniac.com

Assembly

●Note the following.
○Install the coupling with the grooved side facing out.

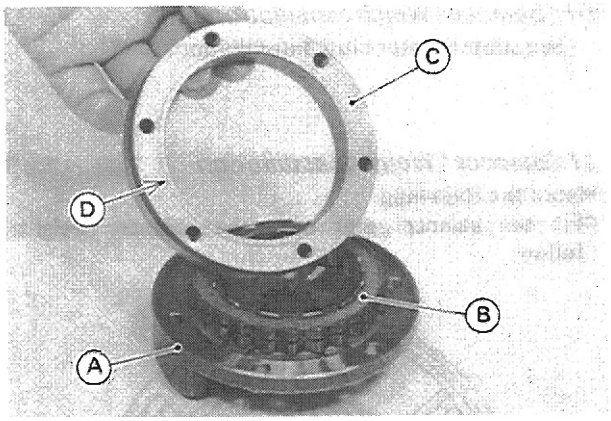

A. Balancer Weight
B. One-way Clutch
C. Coupling
D. Groove

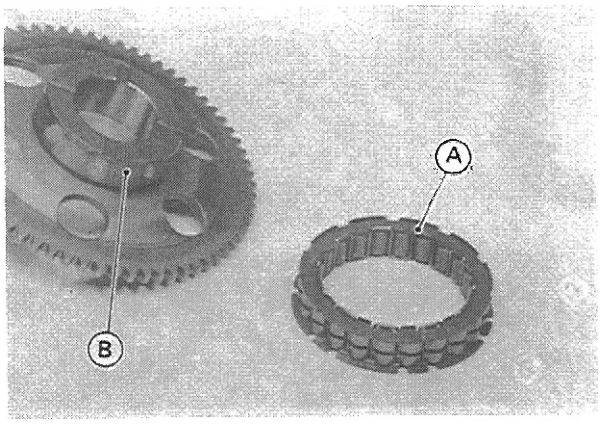

A. One-way Clutch
B. Inner Race (Starter Motor Clutch Gear)

○Apply a non-permanent locking agent to the threads of the Allen bolts, and tighten them to the specified torque (see Exploded View).

Inspection

●Remove the starter motor clutch gear and torque limiter, then reinstall the starter motor clutch gear into the starter motor clutch.
●Turn the starter motor clutch to both side.
○When viewed from the right side of the engine, the clutch should turn clockwise freely, but should not turn counterclockwise.

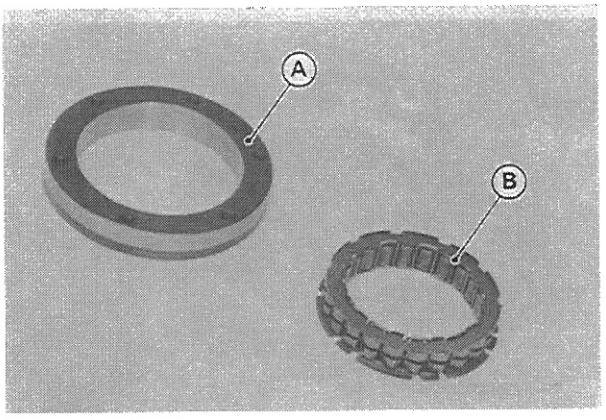

A. Coupling
B. One-way Clutch

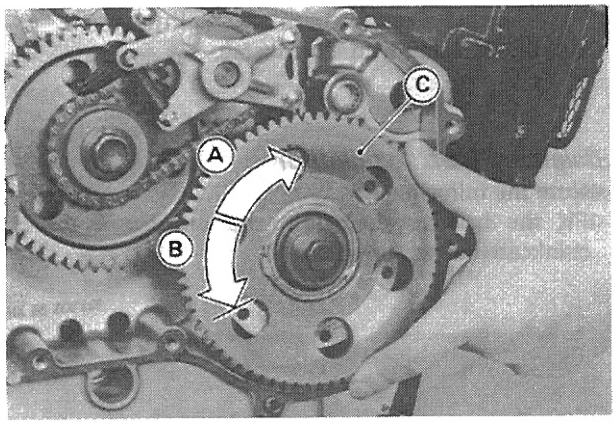

A. Turn freely.
B. Locked
C. Starter Motor Clutch Gear

★If the starter motor clutch does not operate as it should or if it makes noise, go to the next step.
●Disassemble the starter motor clutch.
★If the one-way clutch installation is incorrect, reinstall it.
★Visually inspect the clutch parts for damage: one-way clutch, coupling and starter motor clutch gear.
★If there is any worn or damaged part, replace it.

Balancer

RH Balancer Weight Removal

See starter motor clutch removal.

LH Balancer Weight Removal

●Remove the engine.
●Remove the shift lever rear end.
●Remove the pickup coils.
●Remove the alternator inner cover.

http://manuals.magnamaniac.com

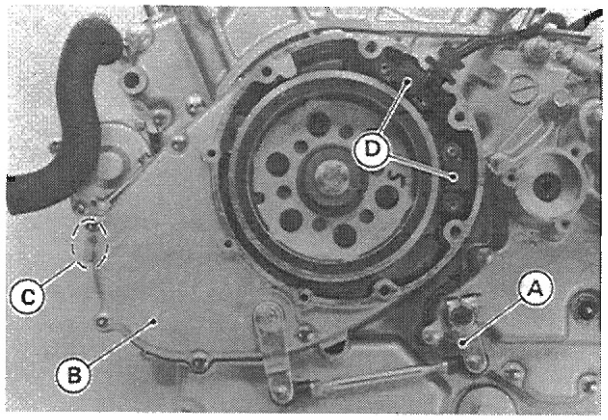

A. Shift Lever
B. Inner Cover
C. Tap Here
D. Pickup Coils

●Loosen the LH balancer gear bolt while holding the alternator rotor with a flywheel holder (special tool).

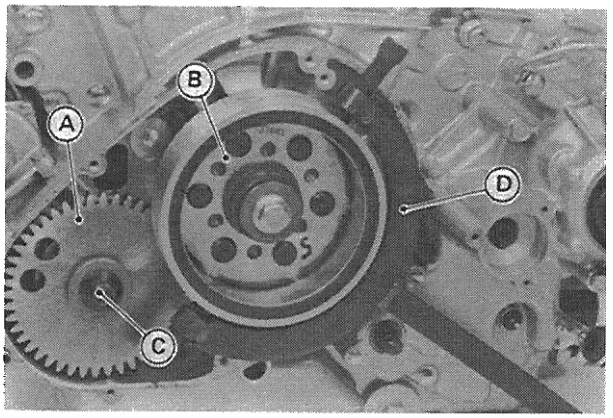

A. Balancer Gear
B. Alternator Rotor
C. Bolts
D. Rotor Holder: 57001-1248

●Remove the alternator rotor bolt by using the rotor holder (special tool: 57001-1248).
●Take the alternator rotor with spacer and ratchet off the crankshaft.
●Remove the balancer gear bolt, and take the balancer gear, spacer, balancer weight off the balancer shaft as a set.

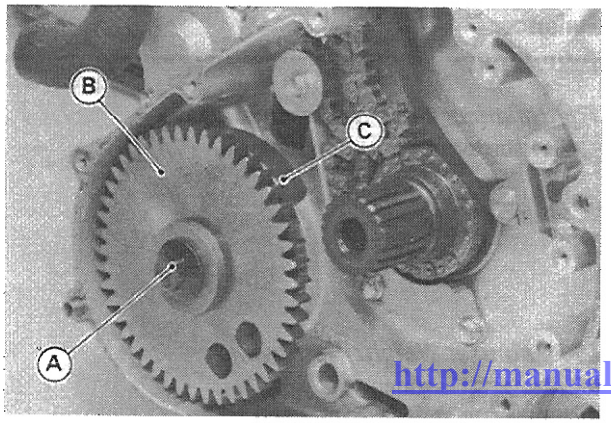

A. Bolt
B. Balancer Gear
C. Balancer Weight

RH Balancer Weight Installation

See starter motor clutch installation.

LH Balancer Weight Installation

●Note the following.
○Fit the balancer gear onto the balancer weight as follow.

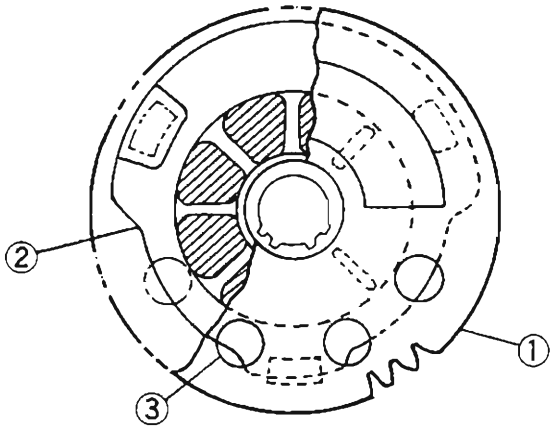

1. Gear
2. Weight
3. Hole

○Tighten the balancer gear bolt to the specified torque (see Exploded View).
○Tighten the alternator rotor bolt to the specified torque (see Exploded View in Electrical chapter).

Balancer Shaft Removal

●Split the crankcase (see Crankcase Splitting).
●Pull the shaft out of the crankcase.

Balancer Shaft Installation

●Note the following.
○Fit the balancer shaft into the bearing in the LH crankcase half as shown.

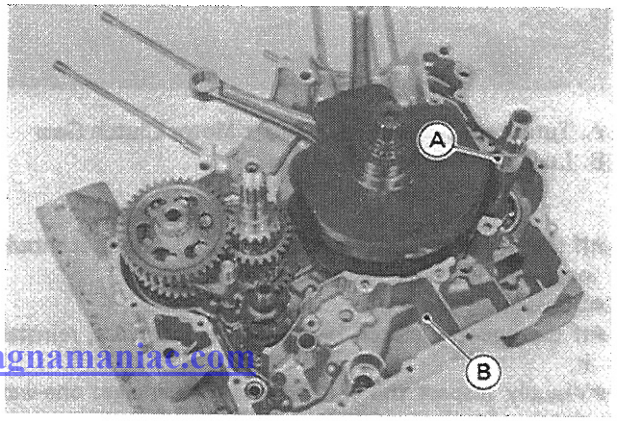

A. Balancer Shaft
B. LH Crankcase Half

http://manuals.magnamaniac.com

Starter Torque Limiter

Removal

- Remove the muffler (see Engine Top End chapter).
- Remove the right down tube (see Frame chapter).
- Remove the RH engine cover.
- Remove the starter motor clutch gear.
- Pull the torque limiter out of the crankcase.

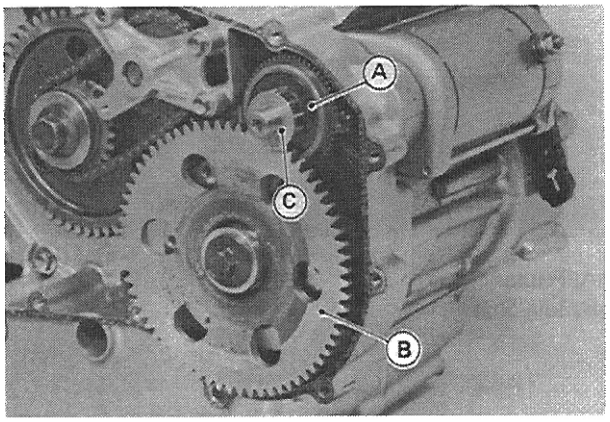

A. Torque Limiter
B. Starter Motor Clutch Gear
C. Washer

CAUTION

○**Do not disassemble the torque limiter. The torque limiter will not function if this is done.**

Inspection

- Remove the torque limiter and visually inspect it.

★If the limiter has wear, discoloration, or other damage, replace it as a set.

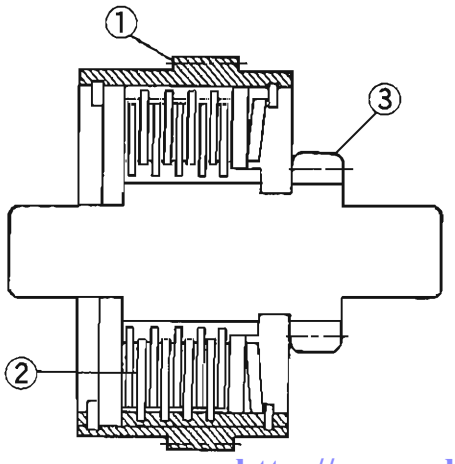

1. Gear
2. Friction Plate
3. Pinion

Water Pump Idle Shaft Holder

Removal

- Take the spring end off the hook.
- Unscrew the bolts and take the idle shaft holder with a chain guide out of the crankcase.

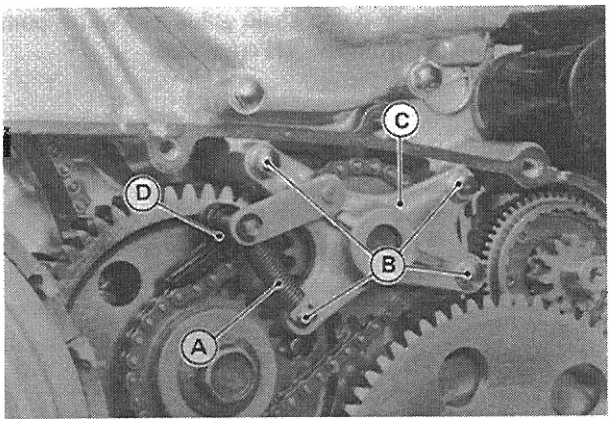

A. Spring
B. Bolts
C. Holder
D. Chain Guide

- Pull out the chain guide from the holder.

Installation

- Note the following.

○Put the washer onto the idle shaft, and fit the knock pins into the crankcase.

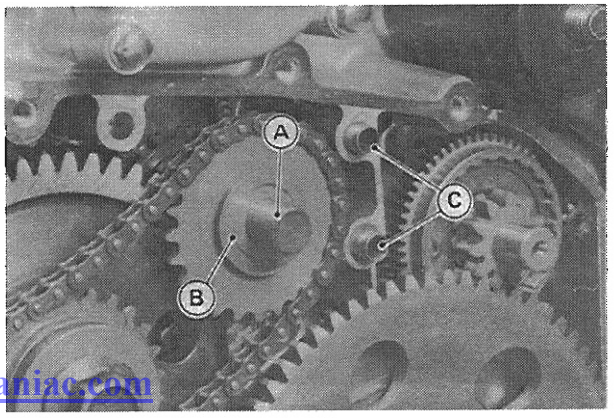

A. Idle Shaft
B. Washer
C. Knock Pins

http://manuals.magnamaniac.com

Primary Gear

Removal

●Remove the following parts.
Muffler (see Engine Top End chapter)
Right Down Tube (see Frame chapter)
Right Engine Cover
Starter Motor Clutch Gear
Clutch
●Remove the water pump chain guide and water pump idle shaft holder from the RH crankcase.

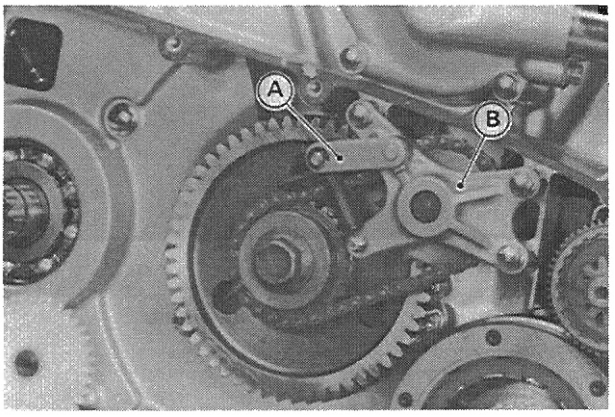

A. Chain Guide B. Idle Shaft Holder

●Remove the primary gear bolt by using a air impact wrench, and take the out water pump drive sprocket and idle shaft sprocket (A) as a set.

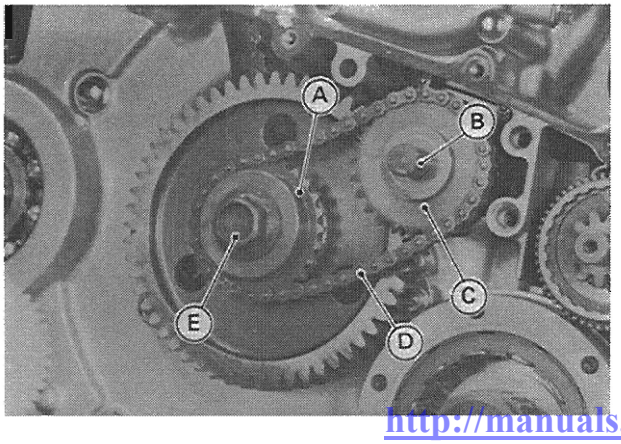

A. Water Pump Drive Sprocket D. Chain
B. Idle Shaft E. Primary Gear Bolt
C. Sprocket (A)

●Pull the primary gear out of the crankshaft, and take the pin out of the idle shaft.

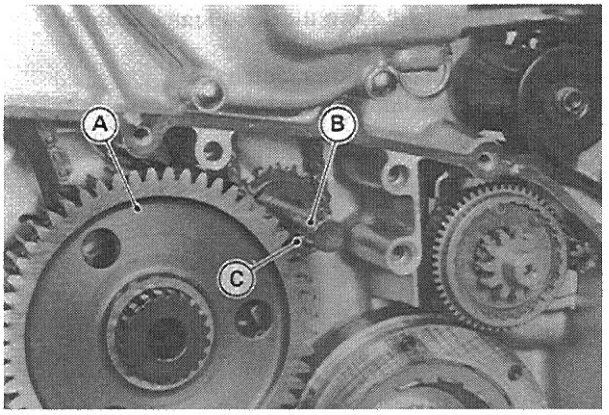

A. Primary Gear C. Pin
B. Idle Shaft

Installation

●Note the following.
○Fit the primary gear with the notched side facing toward the inside of the engine.

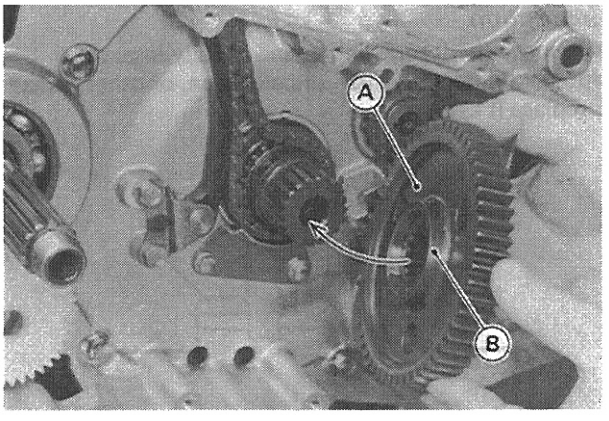

A. Primary Gear B. Notched Portion

http://manuals.magnamaniac.com

○When the water pump idle shaft is installed, fit the pin into the sprocket recesses.
○Tighten the primary gear bolt to the specified torque (see Exploded View) while holding the primary gear with a gear holder (special tool).

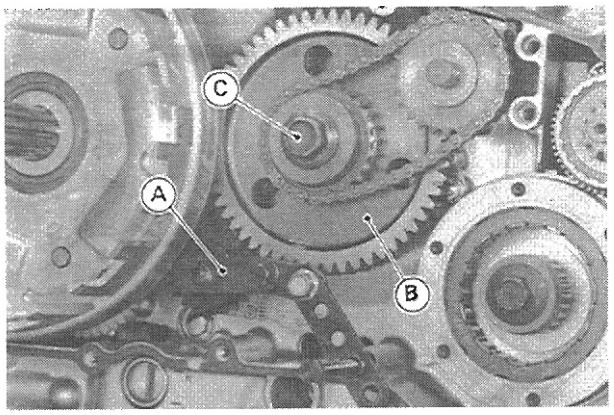

A. Gear Holder (57001-1015)
B. Primary Gear
C. Primary Gear Bolt

○Tighten the clutch hub nut to the specified torque (see Exploded View).

●Remove the shift shaft, while pushing the shift mechanism arm forward.

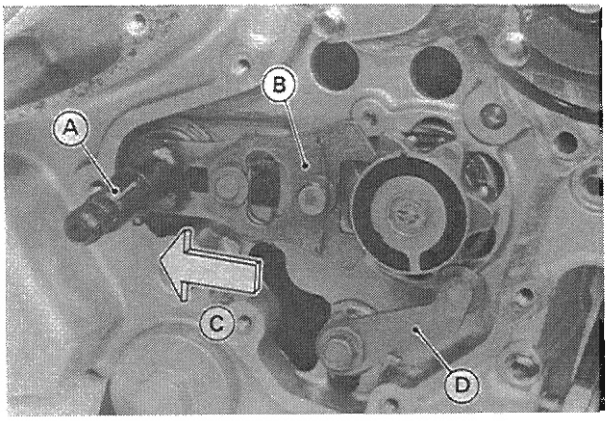

A. Shift Shaft
B. Shift Mechanism Arm
C. Push
D. Gear Positioning Lever

●Unscrew the bolt and remove the gear positioning lever and its spring together.

Transmission

External Shift mechanism Removal

●Remove the following.
LH Engine Cover
Engine (see Engine Removal/Installation chapter)
Shift Lever Rear End
Front Bevel Gear Case

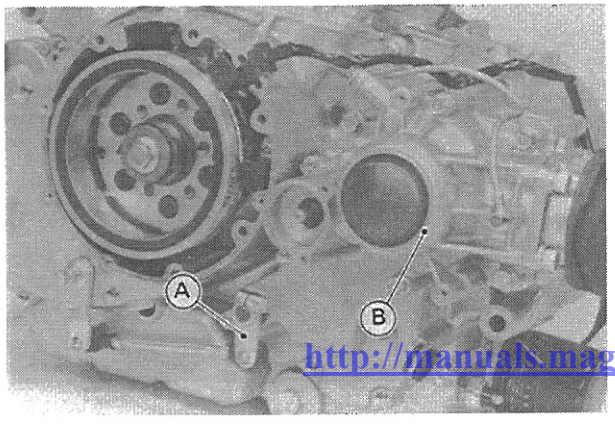

A. Shift Lever
B. Front Bevel Gear Case

External Shift Mechanism Installation

●Note the following.
○Position the gear positioning lever and spring in the crankcase and screw in the bolt as shown.

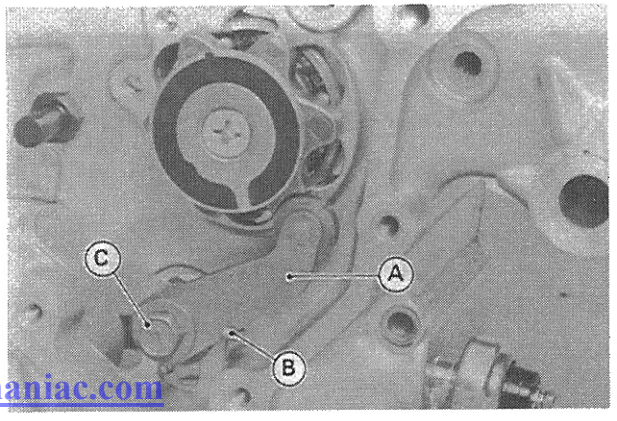

A. Lever
B. Spring
C. Bolt

http://manuals.magnamaniac.com

○Install the shift lever as shown.
☆If necessary, loosen the locknuts and turn the shift rod to obtain an **88.5 mm length** including the locknuts.

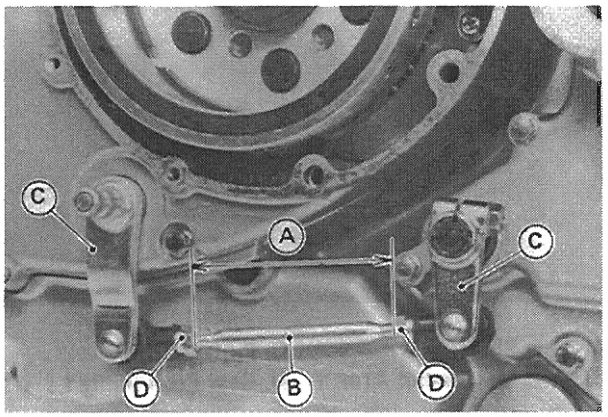

A. 88.5 mm Length
B. Shift Rod
C. Shift Levers
D. Locknuts

○Install the clutch hose guide as follows.

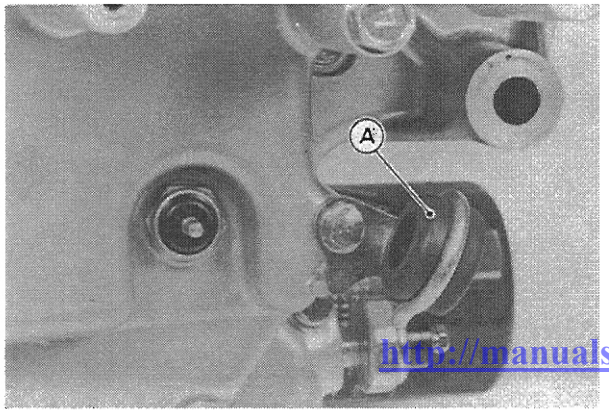

A. Hose Guide

External Shift Mechanism Inspection

●Examine the shift shaft for any damage.

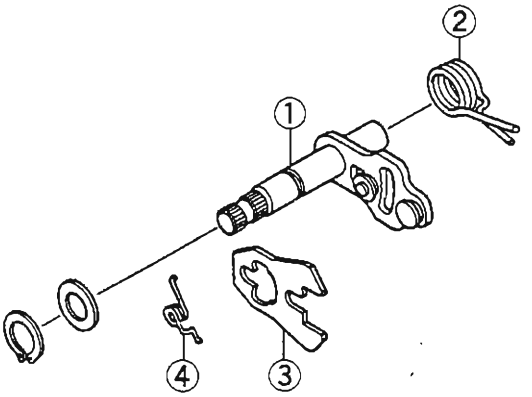

1. Shift Shaft
2. Return Spring
3. Shift Mechanism Arm
4. Arm Spring

○Check the shift shaft for bending or damage to the splines.
★If the shaft is bent, straighten or replace it. If the splines are damaged, replace the shaft.
○Check the return spring and arm spring for breaks or distortion.
☆If the springs are damaged in any way, replace them.
○Check the shift mechanism arm for distortion.
☆If the shift mechanism arm is damaged in any way, replace the arm.
●Check that the return spring bolt is not loose.
★If it is removed, unscrew it, apply a non-permanent locking agent to the threads, and tighten it to the specified torque (see Exploded View).
●Check the gear positioning lever and spring for breaks or distortion.
★If the lever or spring is damaged in any way, replace them.

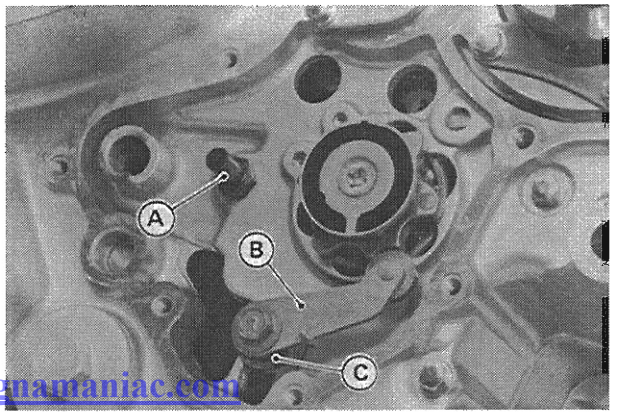

A. Return Spring Bolt
B. Gear Positioning Lever
C. Spring

http://manuals.magnamaniac.com

●Visually inspect the shift drum cam.
★If it is badly worn or if it shows any damage, replace it.

Transmission Shafts Removal

●Remove the engine.
●Split the crankcase.
●Pull out the shift rod and take the shift forks out of the transmission gears.
●Take out the drive shaft and output shaft as a set.

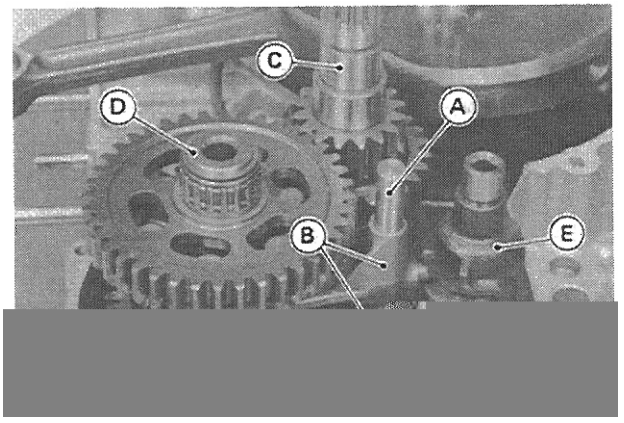

A. Shift Rod
B. Shift Forks
C. Drive Shaft
D. Output Shaft
E. Shift Drum

Transmission Shafts Installation

●Note the following.
○Check the position of the shift forks as shown.
○Fit the drive and output shafts as a set into the LH crankcase half, while placing the shift fork onto the drive shaft.

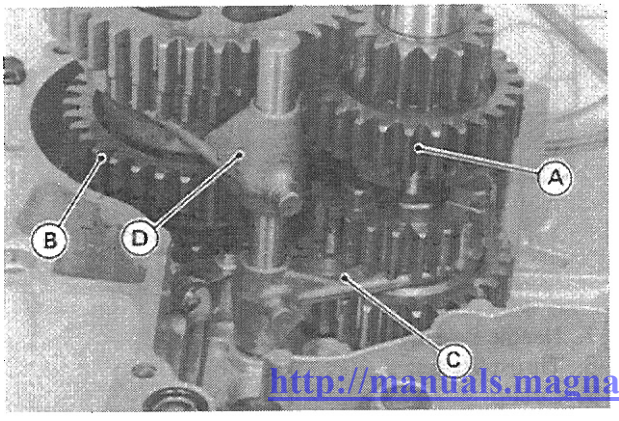

A. Drive Shaft
B. Output Shaft
C. Shift Fork For Drive Shaft
D. Shift Fork For Output Shaft

Transmission Disassembly

●Remove the transmission shafts.
●Using the circlip pliers (special tool: 57001-144) to remove the circlips, disassemble the transmission shaft.
●The 3rd gear on the output shaft has three steel balls in it for the positive neutral finder mechanism. Remove the 3rd gear as the follows.
○Set the output shaft in a vertical position holding the 2nd gear.
○Spin the 3rd gear quickly and pull it off upward.

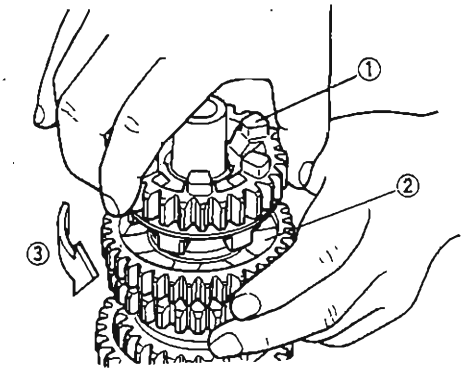

1. 3rd Gear
2. 2nd Gear
3. Spin Quickly

Transmission Assembly

●Note the following.
○Replace any circlip that were removed with new ones.
○Install the circlips so that the opening is aligned with a spline groove.

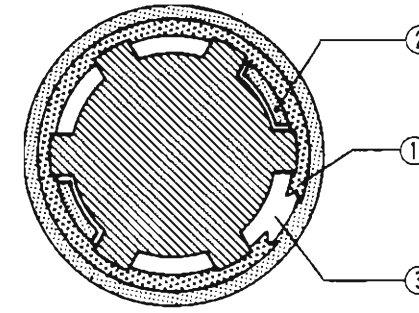

1. Circlip
2. Toothed Washer
3. Groove

http://manuals.magnamaniac.com

oInstall the gear bushing on the output shaft with its oil hole aligned with the shaft oil hole.

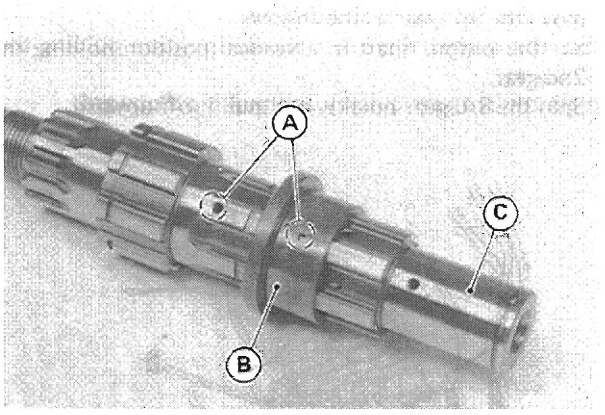

A. Oil Holes
B. Bushing
C. Output Shaft

oFit the steel balls into the 3rd gear holes that are smaller than the other holes as seen from the outside of the gear, and then install the gear on the shaft so that the steel balls align with the recesses in the shaft.

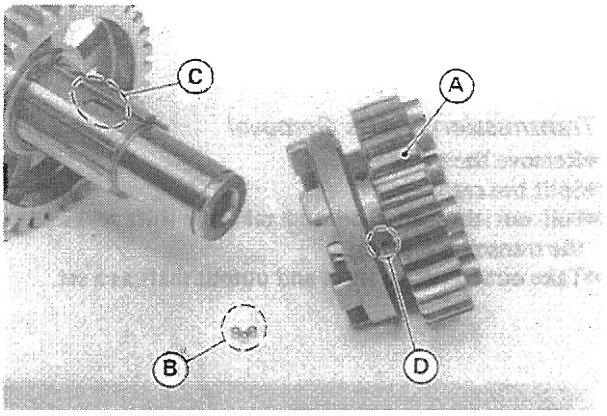

A. 3rd Gear
B. Steel Balls
C. Recess
D. Small Hole

Drive Shaft

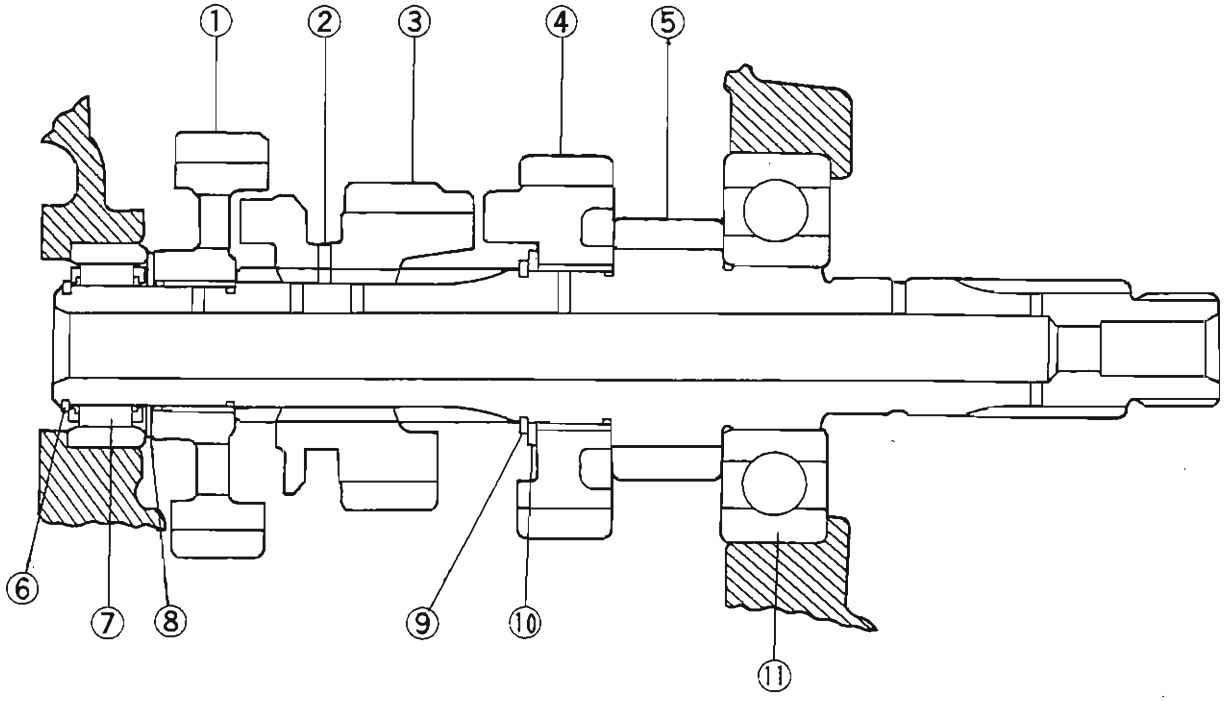

1. Top (4th) Gear
2. Oil Hole
3. 2nd Gear
4. 3rd Gear
5. 1st Gear (Drive Shaft)
6. Circlip
7. Needle Bearing
8. Thrust Washer
9. Circlip
10. Washer
11. Ball Bearing

http://manuals.magnamaniac.com

Output Shaft

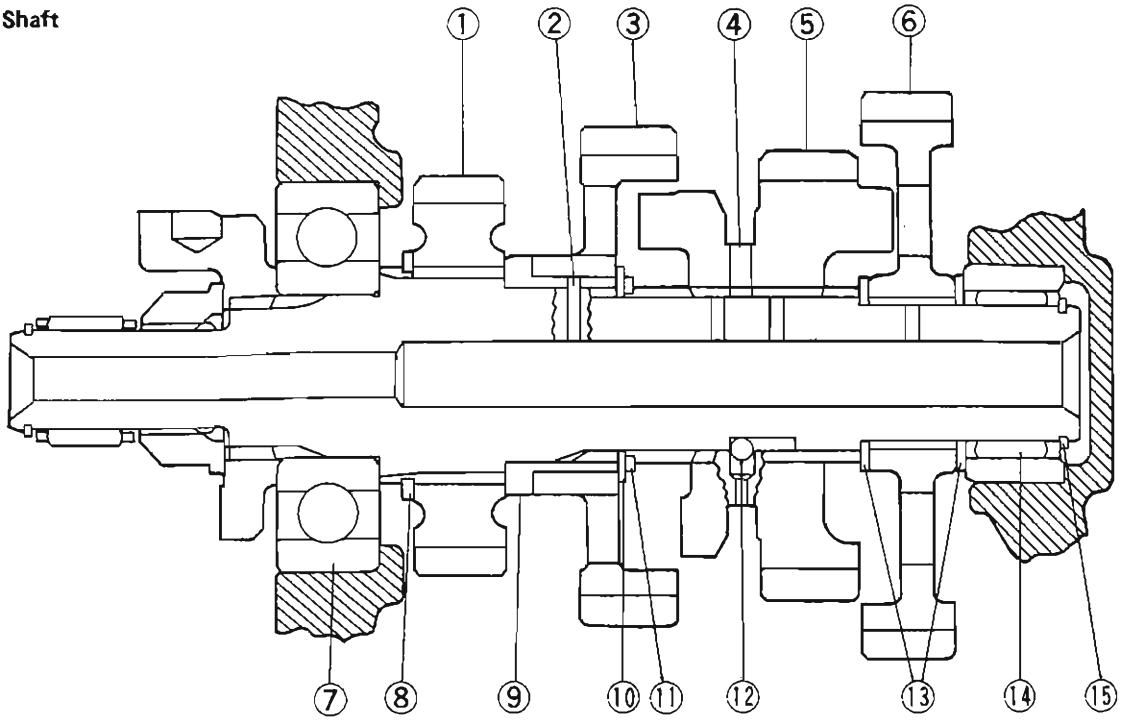

1. Top (4th) Gear
2. Oil Hole
3. 2nd Gear
4. Oil Hole
5. 3rd Gear
6. 1st Gear
7. Ball Bearing
8. Circlip
9. Bushing
10. Toothed Washer
11. Circlip
12. Steel Ball
13. Washer
14. Needle Bearing
15. Circlip

CAUTION

○**Do not apply grease to the steel balls to hold them in place. This will cause the positive neutral finder mechanism to malfunction.**

Shift Drum Removal

●Remove the Transmission Gear as a set.
●Remove the bolts and take off the bearing holder and the shift drum.

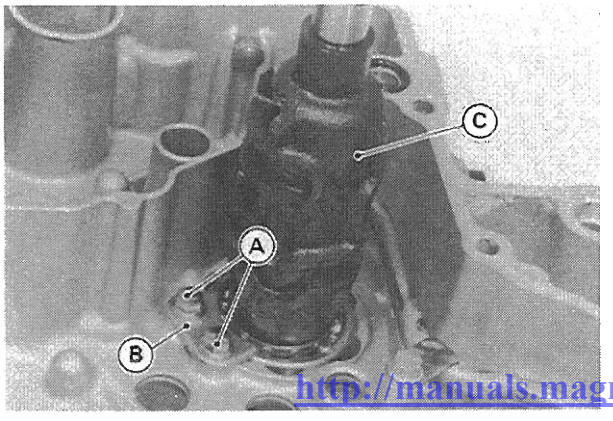

A. Bolts
B. Bearing Holder
C. Shift Drum

Shift Drum Disassembly/Assembly

●Disassemble the shift drum as shown.

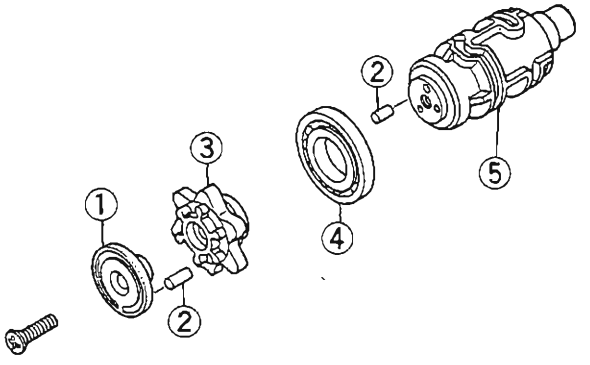

1. Pin Plate
2. Pin
3. Shift Drum Cam
4. Bearing
5. Shift Drum

http://manuals.magnamaniac.com

●When assembling the shift drum, note the following.
○The pin plate must be installed in the correct position, and must fit onto the pin plate as shown.

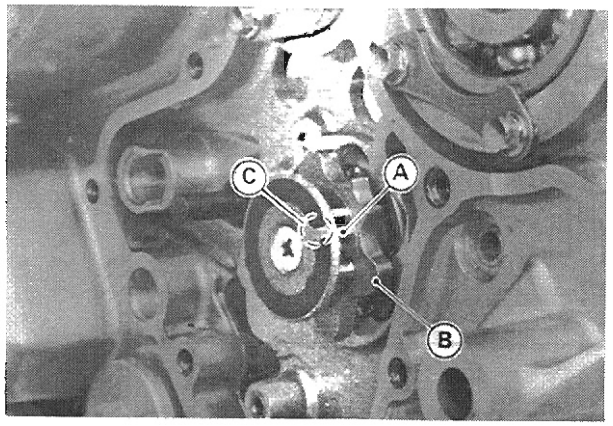

A. Pin
B. Shift Drum Cam
C. Part of the aluminum.

○Apply a non-permanent locking agent to the threads of the pin plate screw.

http://manuals.magnamaniac.com

Wheels/Tires

Table of Contents

Exploded View 9-2
Specifications 9-4
Special Tools 9-5
Wheels (Rims) 9-6
- Front Wheel Removal 9-6
- Front Wheel Installation 9-6
- Rear Wheel Removal 9-7
- Rear Wheel Installation 9-7
- Wheel Coupling Removal 9-8
- Wheel Coupling Installation 9-8
- Wheel (Rim) Inspection (for cast wheel) 9-9
- Balance Weight Installation 9-9
- Balance Weight Removal 9-9
- Spoke Inspection (for wire-spoke wheel) 9-10
- Rim Inspection 9-10
- Balance Weight Installation 9-10

Tires 9-11
- Tire Air Pressure Inspection 9-11
- Tire Inspection 9-11
- Tire Removal 9-11
- Tire Installation 9-12

Hub Bearings 9-12
- Removal 9-12
- Installation 9-13
- Lubrication 9-13

Speedometer Gear Housing 9-13
- Disassembly and Assembly 9-13
- Lubrication 9-14

http://manuals.magnamaniac.com

Exploded View

VN1500-A

(G) : West German Model

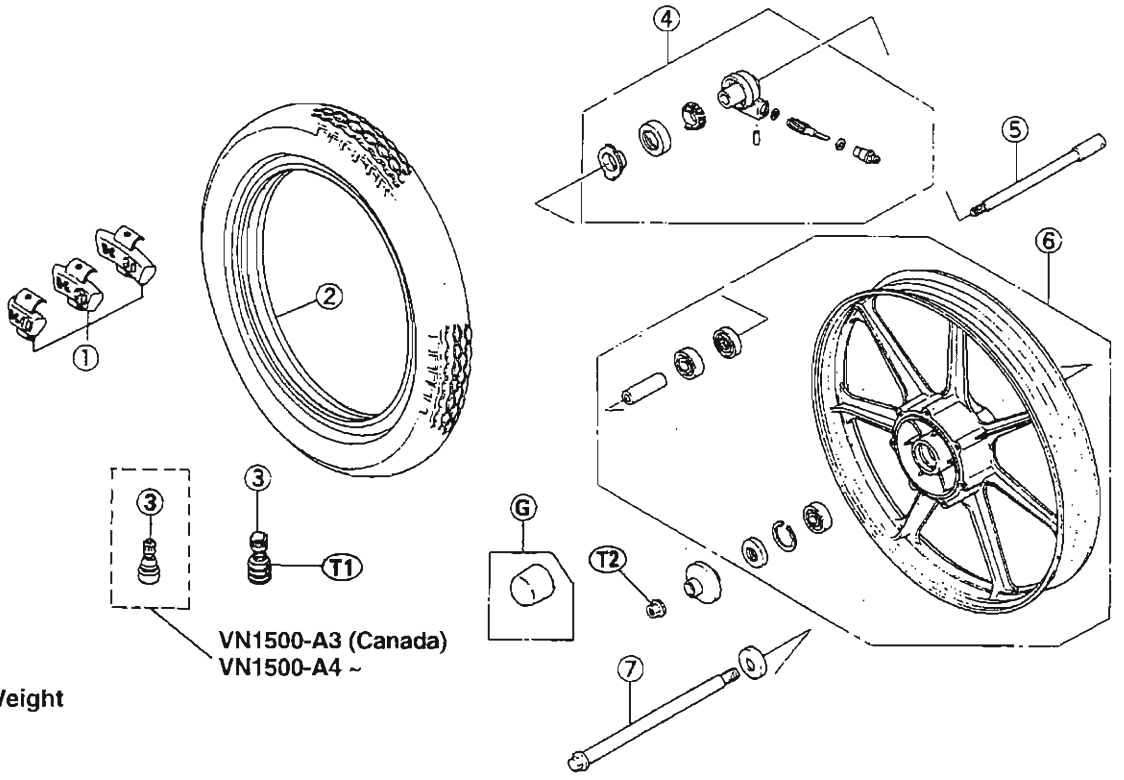

1. Balancer Weight
2. Front Tire
3. Air Valve
4. Speedometer Gear
5. Front Axle
6. Front Wheel
7. Rear Axle
8. Rear Tire
9. Rear Wheel

T1:1.5 N-m (0.15 kg-m,13 in-lb)
T2:88 N-m (9.0 kg-m,65 ft-lb)
T3:110 N-m (11.0 kg-m,80ft-lb)

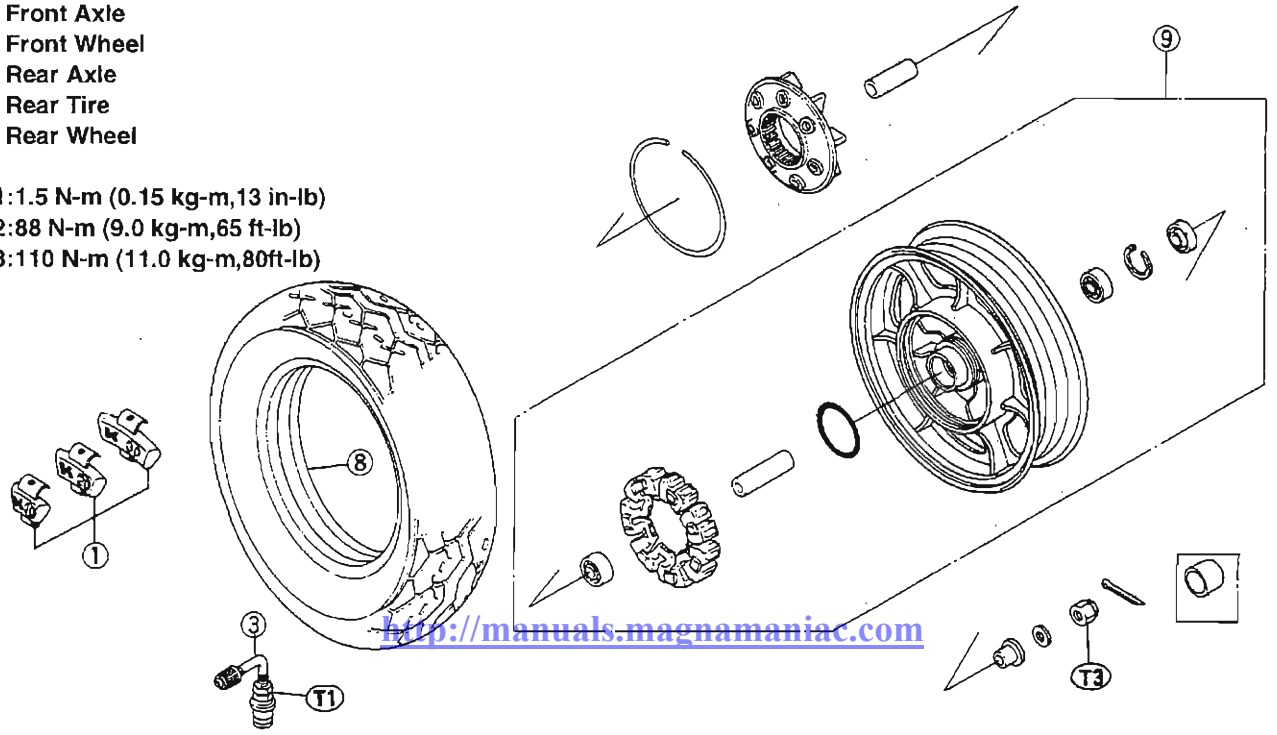

http://manuals.magnamaniac.com

VN1500-B

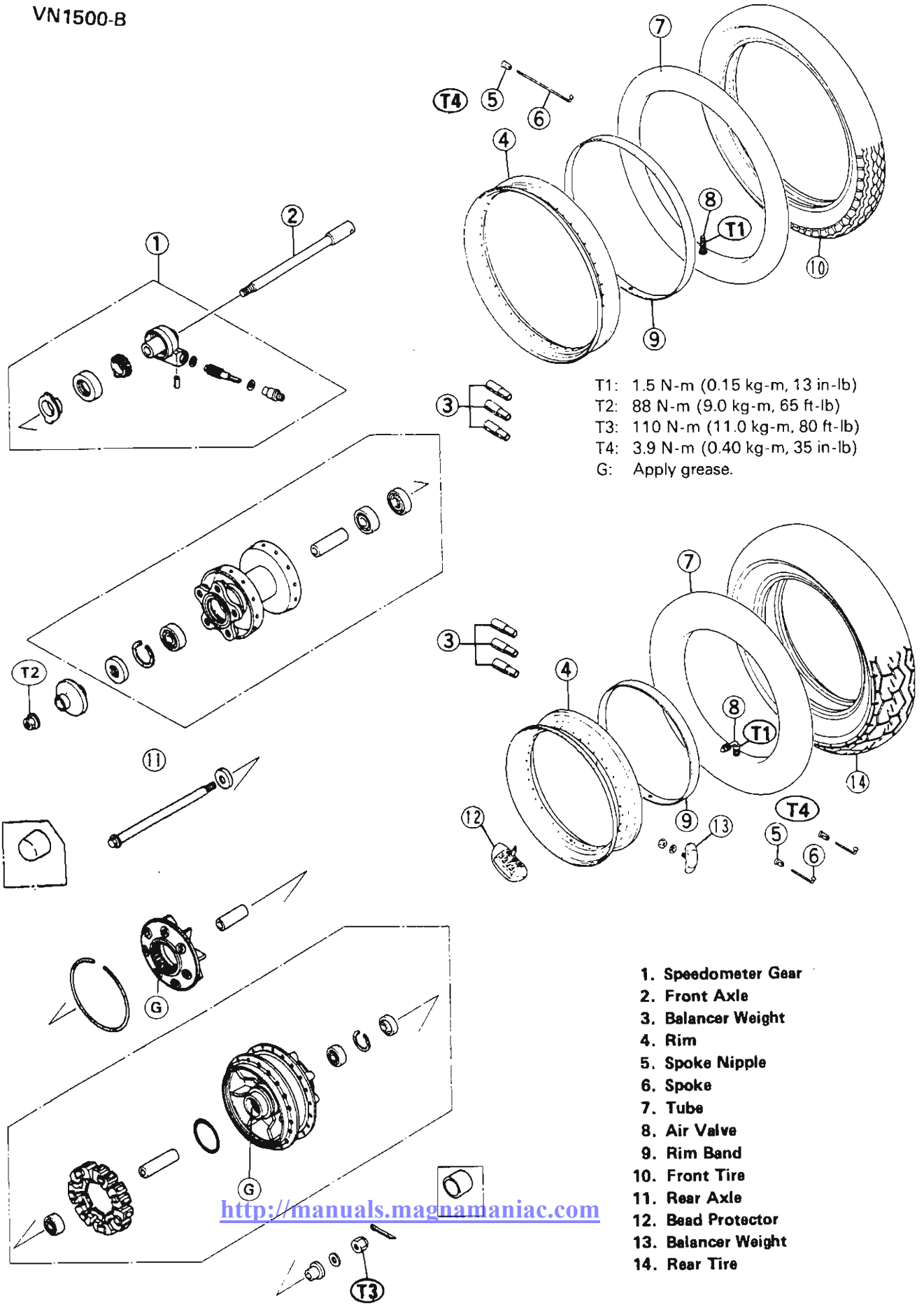

1. Speedometer Gear
2. Front Axle
3. Balancer Weight
4. Rim
5. Spoke Nipple
6. Spoke
7. Tube
8. Air Valve
9. Rim Band
10. Front Tire
11. Rear Axle
12. Bead Protector
13. Balancer Weight
14. Rear Tire

http://manuals.magnamaniac.com

Specifications

Item		Standard	Service Limit
Wheels:			
Rim runout:	VN1500A		
	Axial	— — —	TIR 0.5 mm
	Radial	— — —	TIR 0.8 mm
	VN1500B		
	Axial	TIR 0.8 mm or less (with tire installed)	TIR 2.0 mm
	Radial	TIR 1.0 mm or less (with tire installed)	TIR 2.0 mm
Axle runout/100 mm:		TIR 0.05 mm or less	TIR 0.2 mm
Wheel balance		Less than 10 g	— — —
Balance weights		10 g, 20 g, 30 g	— — —
Tires:			
Tire tread depth:	Front	4.4 mm (DUNLOP) 4.3 mm (BRIDGESTONE)	1 mm
	Rear	7.3 mm 6.2 mm (BRIDGESTONE)	2 mm

Standard tires:

VN1500A	Front	DUNLOP F11J, (A) (E) F11L TL (A11 ~) BRIDGESTONE EXEDRA L309 100/90-19 57H TUBELESS TYPE
	Rear	DUNLOP K425A, (A) (E) K425AL TL (A11 ~) BRIDGESTONE EXEDRA G526 150/90-15 74H or 150/90-15 M/C 74H TUBELESS TYPE
VN1500B	Front	DUNLOP F11J, (E) F11L TT / METZELER Marathon Front 100/90-19 57H TUBE TYPE
	Rear	DUNLOP K425A, (E) K425AL TT 150/90-15 74H or 150/90-15 M/C 74H TUBE TYPE METZELER Marathon Euro 150/90B15 M/C 74H

Tire air pressure:

Front			200 kPa (2.00 kg/cm², 28 Psi)
Rear		Up to 97.5 kg (215 lb) load	200 kPa (2.00 kg/cm², 28 Psi)
		97.5 — 180 kg (215 — 397 lb) load	225 kPa (2.25 kg/cm², 32 Psi)
	VN1500A (E)	97.5 — 185 kg (215 — 408 lb) load	
	VN1500A (G)	97.5 — 186 kg (215 — 410 lb) load	
	VN1500B (E)	97.5 — 184 kg (215 — 406 lb) load	

(E) European Model (A) Australian Model
(G) West German Model

⚠ WARNING

Use the same manufacturer's tires on both front and rear wheels.

http://manuals.magnamaniac.com

NOTE

- *Most countries may have their own regulations requiring a minimum tire tread depth; be sure to follow them.*
- *Check and balance the wheel when a tire is replaced with a new one.*

Special Tools

Circlip Pliers: 57001-143

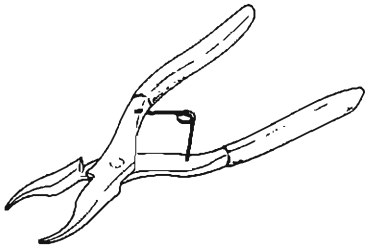

Rim Protector: 57001-1063

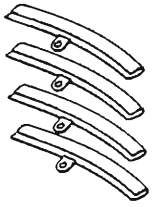

Bead Breaker: 57001-1072

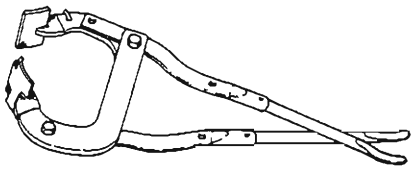

Bearing Driver Set: 57001-1129

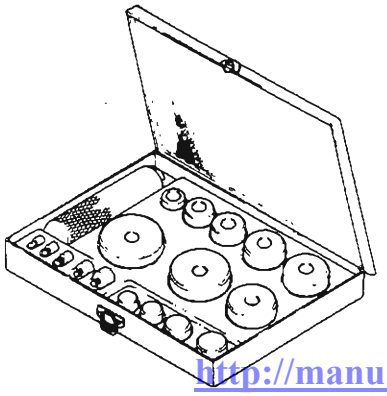

Jack Stand: 57001-1238

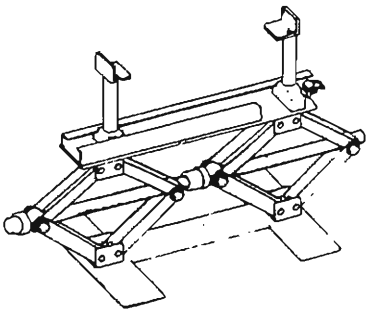

Attachment: 57001-1252

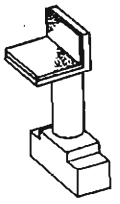

Bearing Remover Shaft: 57001-1265

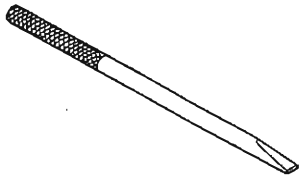

Bearing Remover Head: 57001-1267



Bearing Remover Head: 57001-1293

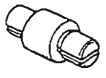

http://manuals.magnamaniac.com

Wheels (Rims)

Front Wheel Removal

●Remove the following.
Speedometer Cable Lower End
Brake Caliper Mounting Bolts

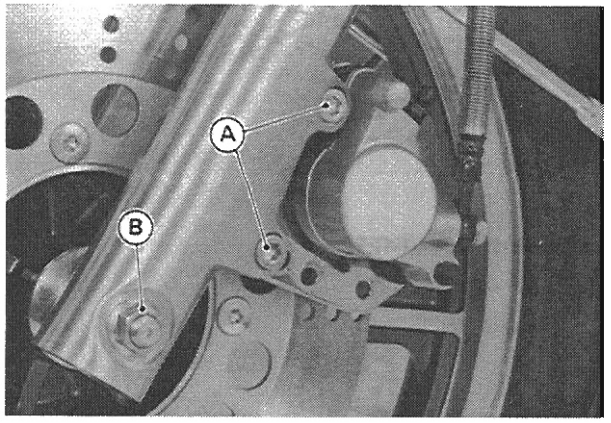

A. Caliper Mounting Bolts B. Axle Nut

Axle Nut
Axle Clamp Bolt (Loosen)

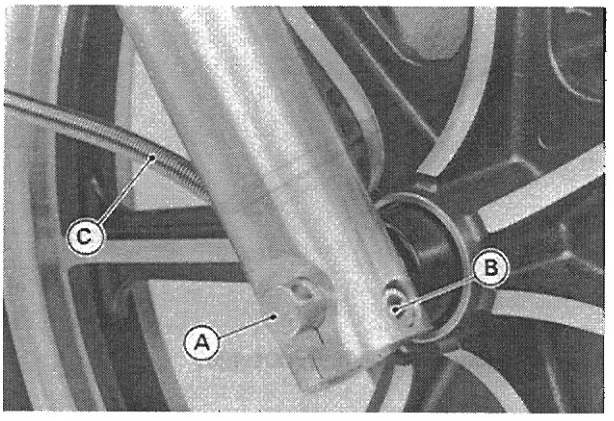

A. Axle C. Speedometer Cable
B. Axle Clamp Bolt

●Use the jack stand and the attachment (special tools: 57001-1238, 57001-1252) and other suitable means to lift the front of the motorcycle.
●Pull out the axle to the right and drop the front wheel out of the fork.

CAUTION

○Do not lay the wheel down on the disc. This can damage or warp the disc. Place blocks under the wheel so that the disc do not touch the ground.

Front Wheel Installation

●Installation is the reverse of removal. Note the following.

NOTE

○Put the speedometer gear drive onto the wheel hub notches, then install the housing so that it fits in the drive notches.

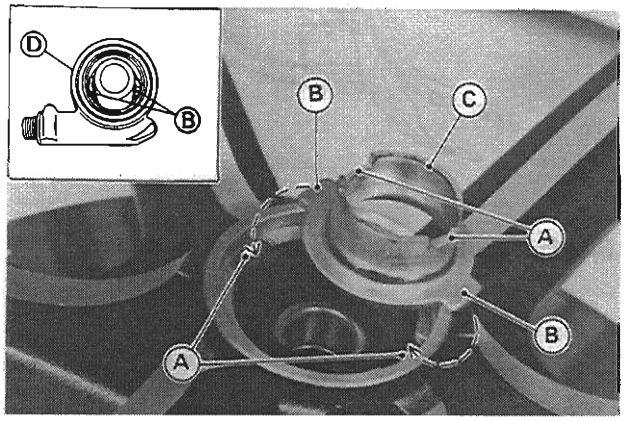

A. Notches C. Drive
B. Projections D. Housing

○Fit the speedometer gear housing stop to the fork leg stop.

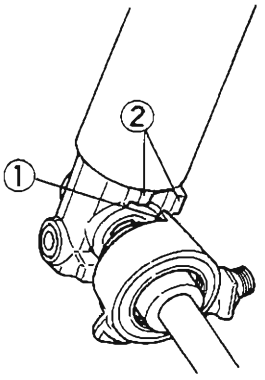

1. Housing Stop 2. Fork Leg Stop

○Fit the collar on the right hand side of the hub.

●Tighten the axle nut to the specified torque (see Exploded View).
●Tighten the axle clamp bolt to the specified torque (see Exploded View).
●Check the front brake.

⚠WARNING

Do not attempt to drive the motorcycle until a full brake lever is obtained by pumping the brake lever until the pads are against the disc. The brakes will not function on the first application of the lever if this is not done.

http://manuals.magnamaniac.com

Rear Wheel Removal

●Remove the following.
Muffler (see Engine Top End chapter)
Brake Caliper Mounting Bolts
Caliper Holder Bolt

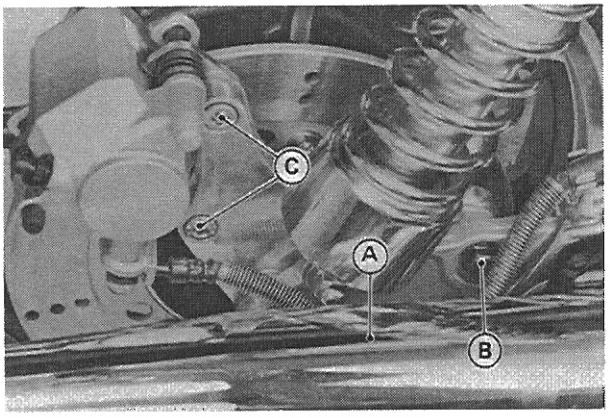

A. Muffler
B. Caliper Mounting Bolts
C. Caliper Holder Bolt

Axle Nut Cotter Pin
Axle Nut

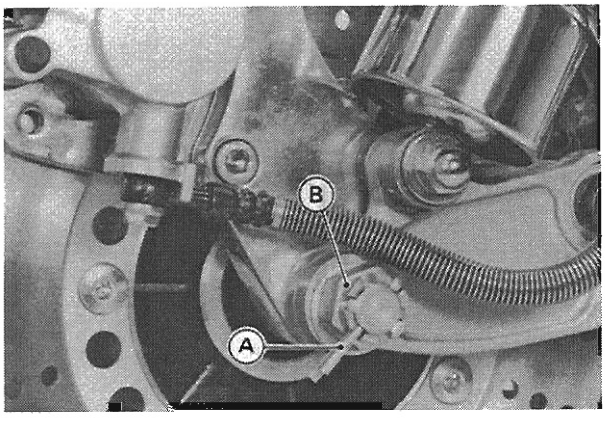

A. Cotter Pin
B. Axle Nut

●Use the jack stand and the attachment (special tools: 57001-1238, 57001-1252) or other suitable means to lift the rear of the motorcycle.
●Pull the axle toward the left, and slide the rear wheel toward the right to disengage the wheel from the final gear case.

Rear Wheel Installation

●Note the following.
○Apply molybdenum disulfide grease to the grease seal.
○Apply molybdenum disulfide grease to the splined portion of the ring gear hub.

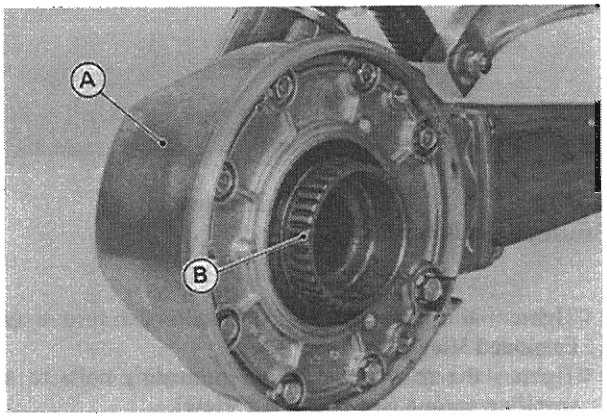

A. Final Gear Case
B. Ring Gear Hub

○Be sure to insert the collar on both sides of the hub.

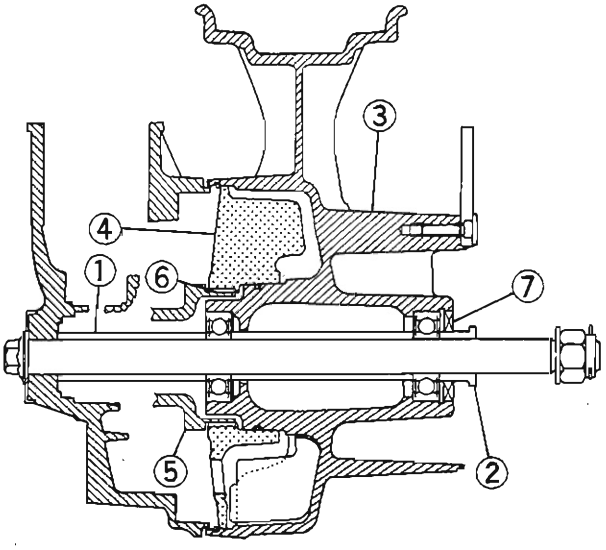

1. LH Collar
2. RH Collar
3. Rear Hub
4. Coupling
5. Ring Gear Hub
6. Splines Portion
7. Grease Seal

http://manuals.magnamaniac.com

○Insert the rear axle into the final gear case toward the LH to RH, and fit the splined portion of the ring gear hub and wheel coupling hub.

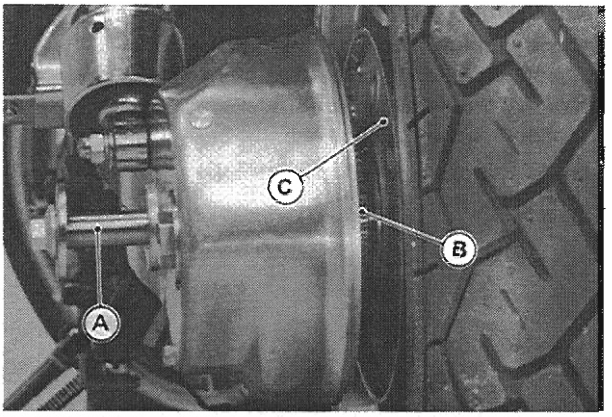

A. Axle
B. Ring Gear Hub
C. Coupling Hub

oTighten the axle nut to the specified torque (see Exploded View).
oTighten the rear brake caliper mounting bolts to the specified torque (see Exploded View).
oTighten the caliper holder bolt to the specified torque (see Exploded View).
oReplace the cotter pin with a new one.
oInstall the muffler (see Engine Top End chapter).

⚠WARNING

Do not attempt to drive the motorcycle until a full brake pedal is obtained by pumping the brake pedal until the pads are against the disc. The brake will not function on the first application of the pedal if this is not done.

Wheel Coupling Removal

- Remove the rear wheel (see Rear Wheel Removal).
- Remove the coupling retainer.
- Remove the wheel coupling with suitable bearing puller if necessary.

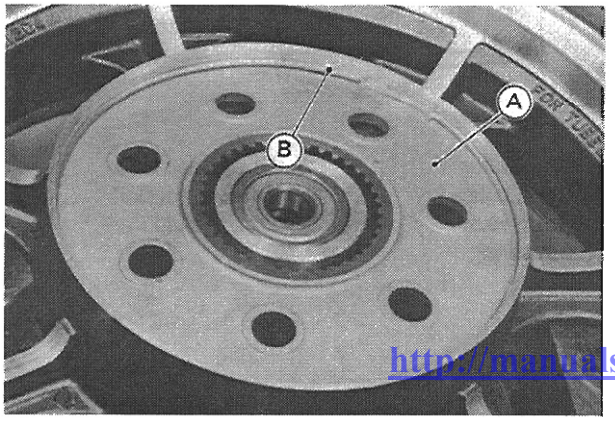

A. Wheel Coupling
B. Coupling Retainer

Wheel Coupling Installation

- Note the following.

oApply molybdenum disulfide grease to the O-ring.

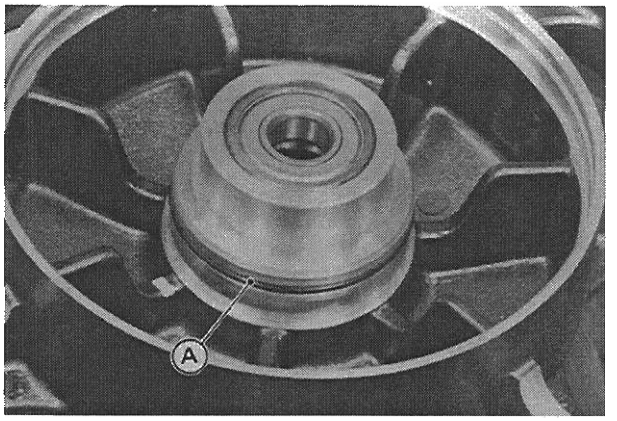

A. O-ring

Wheel (Rim) Inspection (for cast wheel)

- Remove the tire from the wheel.
- Measure the rim runout by using the dial gauge.

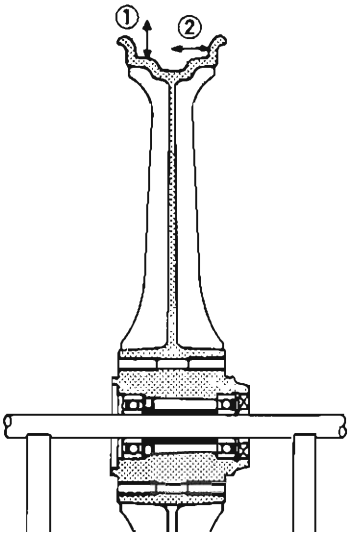

1. Radial Runout
2. Axial Runout

http://manuals.magnamaniac.com

★If rim runout exceeds the service limit, check the wheel bearings.
★If the problem is not due to the bearings, the wheel must be replaced.

Axial Runout
Service Limit: **0.5 mm**
Radial Runout
Service Limit: **0.8 mm**

WARNING

○**Never attempt to repair a damaged wheel. If there is any damage besides wheel bearings, the wheel must be replaced to insure safe operational condition.**

Balance Weight Installation

●Check if the weight portion has any play on the blade-and-clip plate.
★If it does, discard it.
●Lubricate the balance weight blade, tire bead, and rim flange with a soap and water solution or rubber lubricant. This helps the balance weight slip onto the rim flange.

CAUTION

○**Do not lubricate the tire bead with engine oil or gasoline because they will deteriorate the tire.**

●Install the balance weight on the rim.
○Slip the weight on the rim flange by pushing or lightly hammering the weight in the direction shown in the figure.
○Check that the blade and weight seat fully on the rim flange, and that the clip is hooked over the rim ridge and reaches rim flat portion.

WARNING

○**If the balance weight has any play on the rim flange, the blade and/or clip have been stretched. Replace the loose balance weight.**
○**Do not reuse used balance weights.**

Balance Weight

Part Number	Weight (grams)
41075-1014	10
41075-1015	20
41075-1016	30

Installing Balance Weight

(a) Press or lightly hammer the weight in.

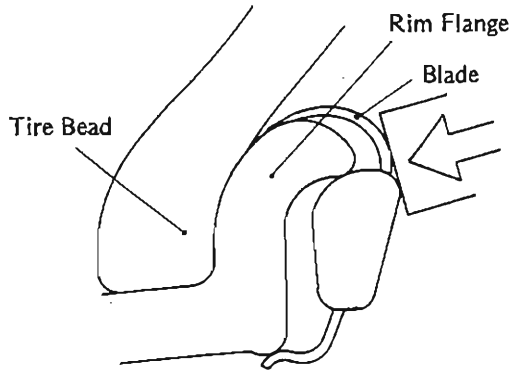

(b) Installation completed.

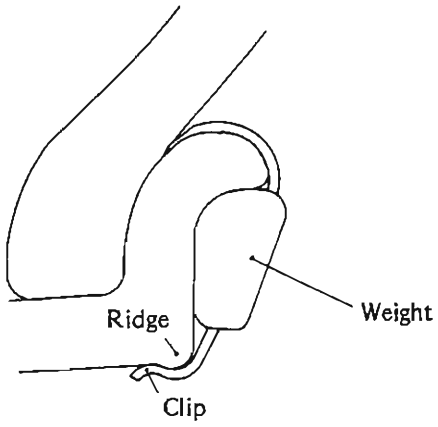

Balance Weight Removal

(a)When the tire is not on the rim.
●Push the blade portion toward the outside with a regular tip screw driver, and slip the weight off the rim flange.
●Discard the used balance weight.

http://manuals.magnamac.com

Removing Balance Weight (without tire on rim)

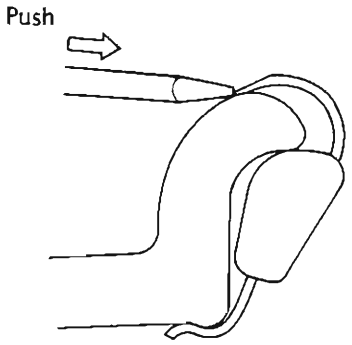

(b)When the tire is on the rim.
●Pry the Balance weight off the rim flange using a regular tip screw driver as shown in the figure.
○Insert a tip of the screw driver between the tire bead and weight blade until the end of the tip reaches the end of the weight blade.
○Push the driver grip toward the tire so that the balance weight slip s off the rim flange.
●Discard the used balance weight.

Removing Balance Weight (with tire on rim)

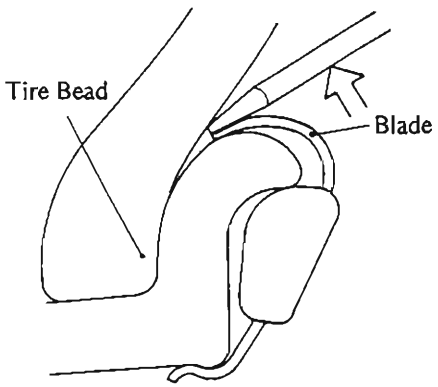

Spoke Inspection (for wire-spoke wheel)
●Check that all the spokes are tightened evenly.
★If spoke tightness is uneven or loose, tighten the spoke nipples to the specified torque evenly (see Exploded View).

WARNING

○**If any spoke breaks, it should be replaced immediately. A missing spoke places an additional load on the other spokes, which will eventually cause other spokes to break.**

http://manuals.magnamaniac.com

Rim Inspection
●Measure the rim runout by using a dial gauge.

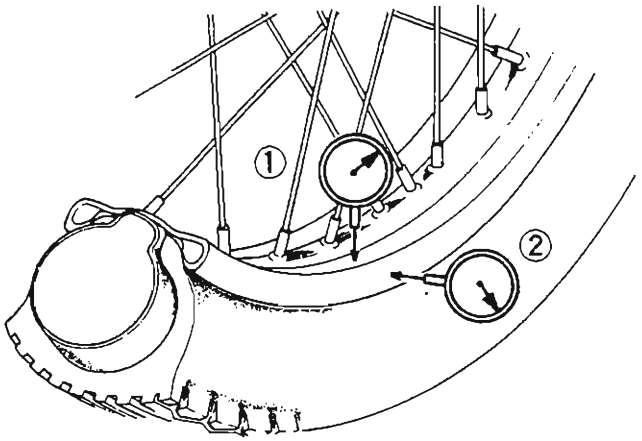

1. Radial Runout 2. Axial Runout

★If rim runout exceeds the service limit, check and perform the following.
○Recentering the rim.
○Retightening the spoke nipples to the specified torque (see Exploded View).
★If the rims is badly bent, it must be replaced.

Axial Runout
Service Limit: 2.0 mm
Radial Runout
Service Limit: 2.0 mm

⚠WARNING

A repaired wheel part may fail in use, possible causing an accident. If any wheel part is bent, dented, cracked, or warped, replace it.

Balance Weight Installation
●Install the balance weight on the spoke nipple.
○Attach a balance weight securely using a pliers.

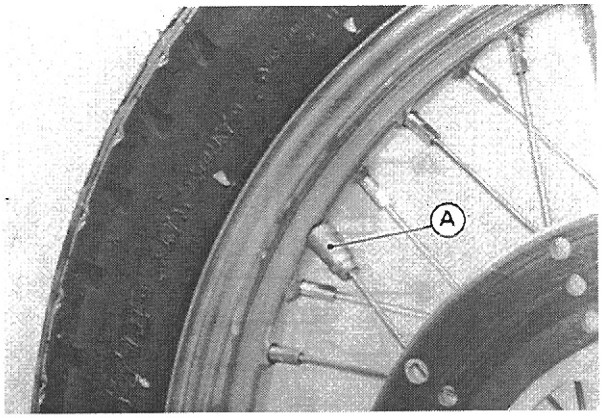

A. Balance Weight

Balance Weight

Part Number	Weight (grams)
41075-1007	10
41075-1008	20
41075-1009	30

Tires

Tire Air Pressure Inspection

NOTE

○*Measure tire pressure when the tires are cold (that is, when the motorcycle has not been ridden more than a mile during the past 3 hours).*

Tire Air Pressure (when cold)

			Load	Air Pressure
Front				200 kPa (2.00 kg/cm², 28 psi)
Rear			Up to 97.5 kg (215 lb)	200 kPa (2.00 kg/cm², 28 psi)
			97.5 – 180 kg (215 – 397 lb)	225 kPa (2.25 kg/cm², 32 psi)
	VN1500A	Ⓔ	97.5 – 185 kg (215 – 408 lb)	
		Ⓖ	97.5 – 186 kg (215 – 410 lb)	
	VN1500B	Ⓔ	97.5 – 184 kg (215 – 406 lb)	

Ⓔ European Model Ⓖ West German Model

Tire Inspection

http://manuals.magnamaniac.com

- Visually inspect the tire for cracks and cuts. Replace the tire if badly damaged.
- Measure the tread depth at the center of the tread with a depth gauge.

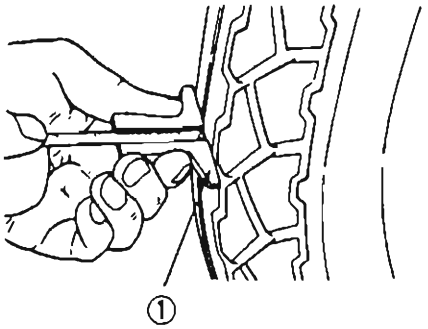

1. Depth Gauge

★If any measurement is less than the service limit, replace the tire.

Tire Tread Depth

Front

Standard: **4.4 mm**

Service Limit: **1 mm**

Rear

Standard: **7.3 mm**

Service Limit: **2 mm**

NOTE

○*For the VN1500-B, replace the rim band with a new one whenever the tire is replaced.*

Tire Removal

- Note the following.

○When removing the rear tire, remove the valve stem nut, balancer nut, and fully loosen the bead protector nut (VN1500-B).

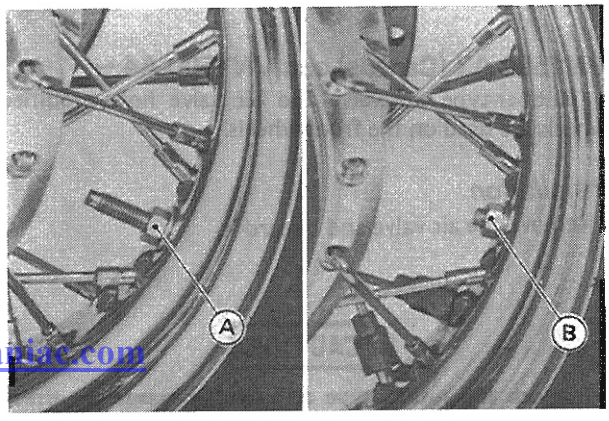

A. Bead Protector Nut B. Balancer Nut

Tire Installation

●Check the tire rotation mark on the rear tire and install it on the rim accordingly.

NOTE

○*The direction of the tire rotation is shown by an arrow on the rear tire sidewall.*

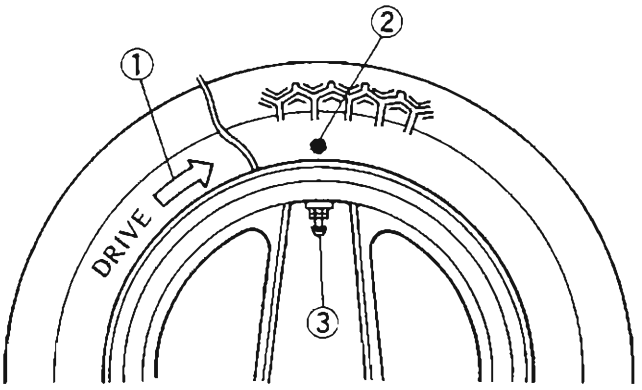

1. Rotation Mark (Arrow)
2. Balance Mark (Yellow Paint)
3. Air Valve

●Position the tire on the rim so that the air valve is at the tire balance mark (the yellow paint mark on a new tire).

WARNING

○**For VN1500-A: Tubeless tires are installed. Do not install tube-type tires on this motorcycle.**
○**For VN1500-B: Tube tires are installed. Do not install tubeless-type tires on this motorcycle.**
○**The recommended standard tires must be used for replacement.**

●After installing the bead protector and balancer, tighten the nuts to the specified torque (VN1500-B: see Exploded View).

VN1500-A3 (Canada) and VN1500-A4 ~

Rubber-type air valve and air valve hole modified wheels are used on the front wheels.

Installation

●Remove the air valve and discard it.

CAUTION

○**Replace the rubber-type air valve whenever the tire is replaced.**
○**Do not reuse the air valve.**

Air Valve

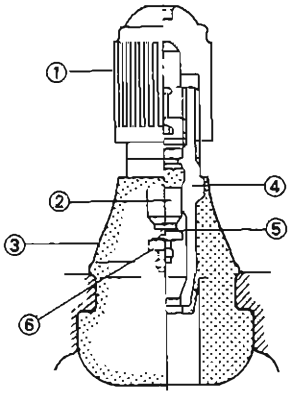

1. Plastic Cap
2. Valve Core
3. Stem Seal
4. Valve Stem
5. Valve Seat
6. Valve Opened

●Install a new valve in the rim.
○Remove the valve cap, lubricate the stem with a soap and water solution, and pull the stem through the rim from the inside out until it snaps into place.

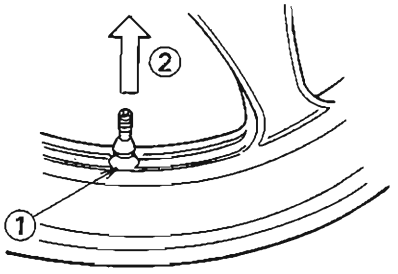

1. Apply soap and water solution.
2. Pull the stem out.

CAUTION

○**Do not use engine oil or petroleum distillates to lubricate the stem becuase they will deteriorate the rubber.**

Hub Bearings

Removal

●Remove the hub bearings by using the bearing remover shaft and heads (special tools).
○Remove the bearing retainer.
○Remove the RH bearing first.

http://manuals.magmaniac.com

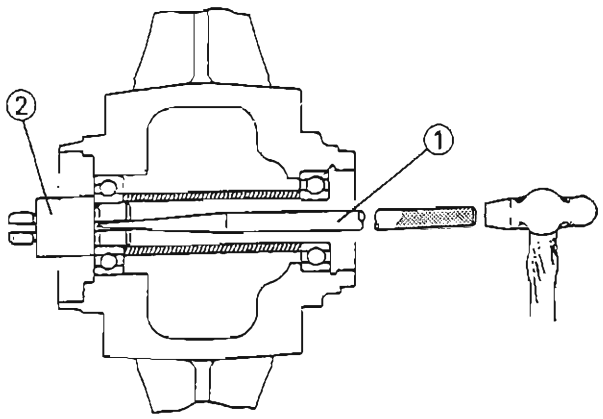

1. Bearing Remover Shaft: 57001-1265
2. Bearing Remover Head: 57001-1267, 1293

CAUTION

○**Do not lay the wheel on the ground with the disc facing down. This can damage or warp the disc. Place blocks under the wheel so the disc does not touch the ground.**

Installation

●Install the bearings by using the bearing driver set (special tool: 57001-1129).

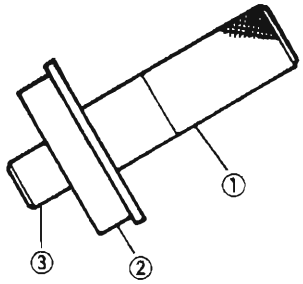

1. Bearing Driver Holder
2. Driver (Large)
3. Driver (Small)

NOTE

○*Install the bearings so that the marked or shielded sides face out.*

Lubrication

NOTE

○*Since the bearings on the rear wheel hub are packed with grease and shielded on both sides, they are not required to be removed for lubrication.*

●For front hub bearing, turn each bearing back and forth while checking for roughness or binding.
★If roughness or binding is found, replace the bearing.
★If it is noisy, does not spin smoothly, or has any rough spots, it must be replaced.

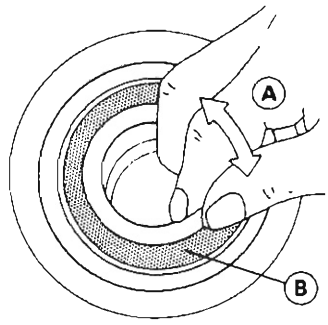

Turn back and forth [A]
Shield [B]

Speedometer Gear Housing

Disassembly and Assembly

NOTE

○*It is recommended that the assembly be replaced rather than attempting to repair the components.*

http://manuals.magnamaniac.com

●Install the speedometer gear housing so that it fits in the speedometer gear drive notches (see Front Wheel Installation).

Lubrication

●Clean and grease the speedometer gear housing.

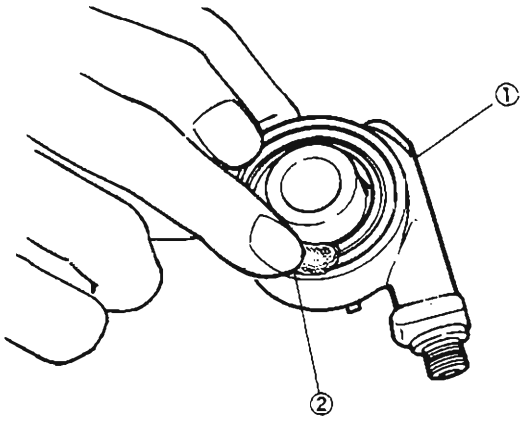

1. Speedometer Gear Housing
2. Grease.

http://manuals.magnamaniac.com

Final Drive

Table of Contents

Exploded View 10-2
Specifications 10-4
Special Tools 10-4
Final Gear Case Oil 10-6
  Oil Level Inspection 10-6
  Oil Change 10-6
Final Gear Case 10-6
  Removal 10-6
  Installation notes 10-7
  Disassembly 10-9
  Assembly Notes 10-9
  Bevel Gear Inspection 10-10
  Pinion Joint Inspection 10-10
  Ball Bearing Inspection 10-10
  Needle Bearing Inspection 10-10
  Oil Seal Inspection 10-10
  Final Bevel Gear Adjustment 10-11
  Bevel Gear Inspection 10-14
  Pinion Gear Bearing Inspection 10-14
  Oil Seal Inspection 10-14
Propeller Shaft 10-14
  Removal 10-14
  Installation Notes 10-15
  Sliding Joint Inspection 10-15
  Propeller Shaft Inspection 10-15
  Sliding Joint Inspection 10-15
Front Bevel Gears 10-16
  Front Gear Case Removal 10-16
  Front Gear Case Installation 10-16
  Front Gear Case Disassembly (including drive gear removal) 10-16
  Front Gear Case Assembly (including drive gear installation) 10-18
  Driven Gear Disassembly 10-18
  Driven Gear Assembly 10-19
  Damper Cam Removal 10-19
  Damper Cam Installation Notes 10-20
  Front Bevel Gear Adjustment 10-20
  Bevel Gear Inspection 10-24
  Cam Damper Inspection 10-24
  Ball Bearing Inspection 10-25
  Tapered Roller Bearing Inspection 10-25
  Needle Bearing Inspection 10-25
  Oil Seal Inspection 10-25

http://manuals.magnamaniac.com

Exploded View

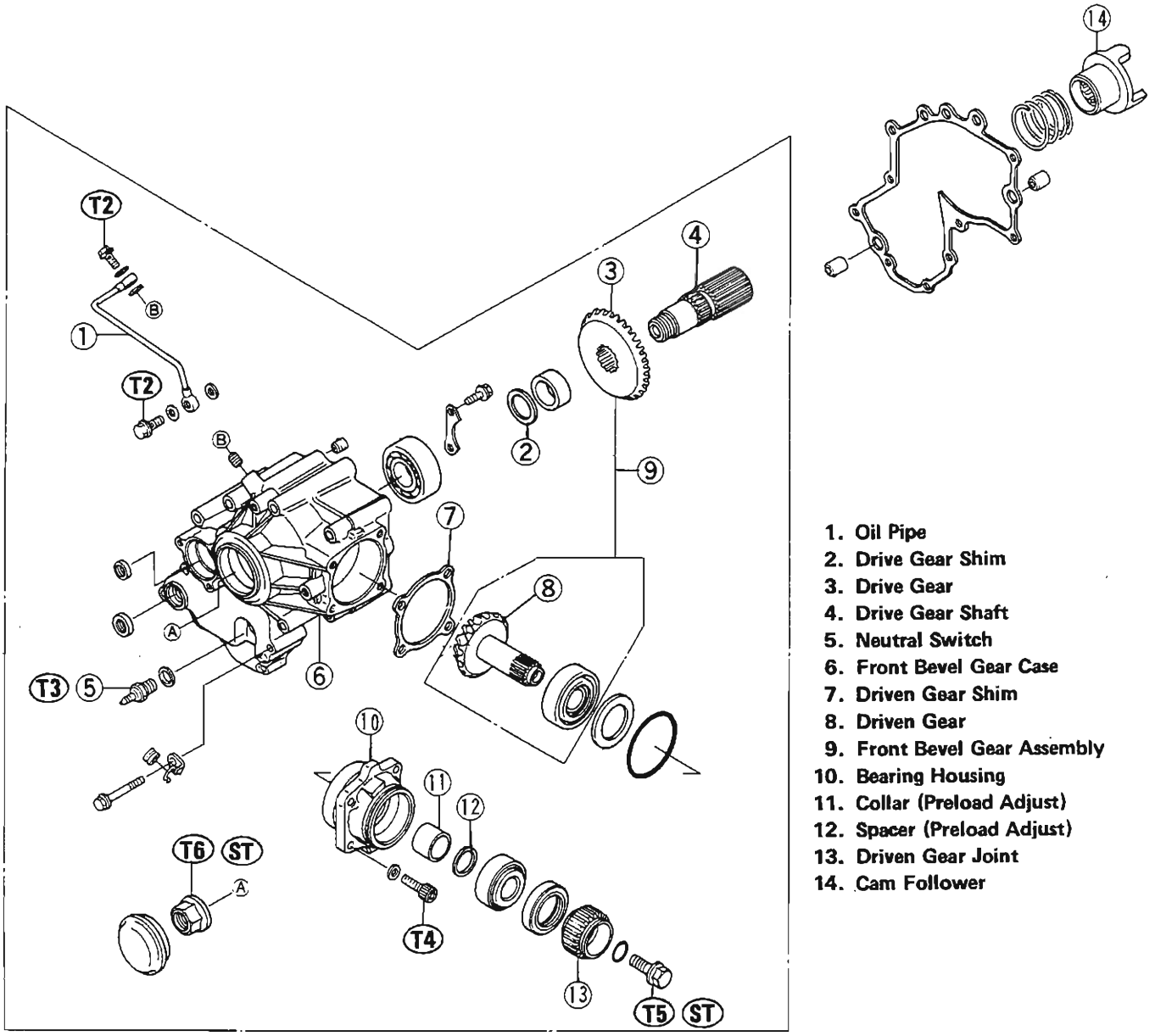

1. Oil Pipe
2. Drive Gear Shim
3. Drive Gear
4. Drive Gear Shaft
5. Neutral Switch
6. Front Bevel Gear Case
7. Driven Gear Shim
8. Driven Gear
9. Front Bevel Gear Assembly
10. Bearing Housing
11. Collar (Preload Adjust)
12. Spacer (Preload Adjust)
13. Driven Gear Joint
14. Cam Follower

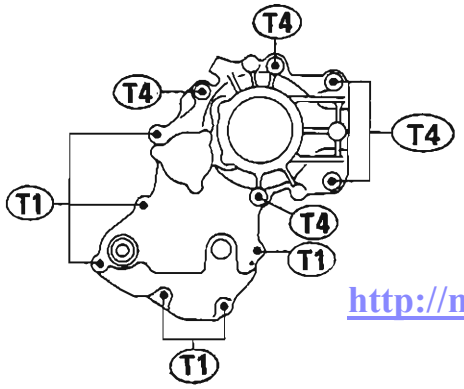

ST: Stake the fasteners.
T1: 8.8 N-m (0.90 kg-m, 78 in-lb)
T2: 12 N-m (1.2 kg-m, 104 in-lb)
T3: 15 N-m (1.5 kg-m, 11.0 ft-lb)
T4: 25 N-m (2.5 kg-m, 18.0 ft-lb)
T5: 120 N-m (12.1 kg-m, 88 ft-lb)
T6: 265 N-m (27 kg-m, 195 ft-lb)

http://manuals.magnamaniac.com

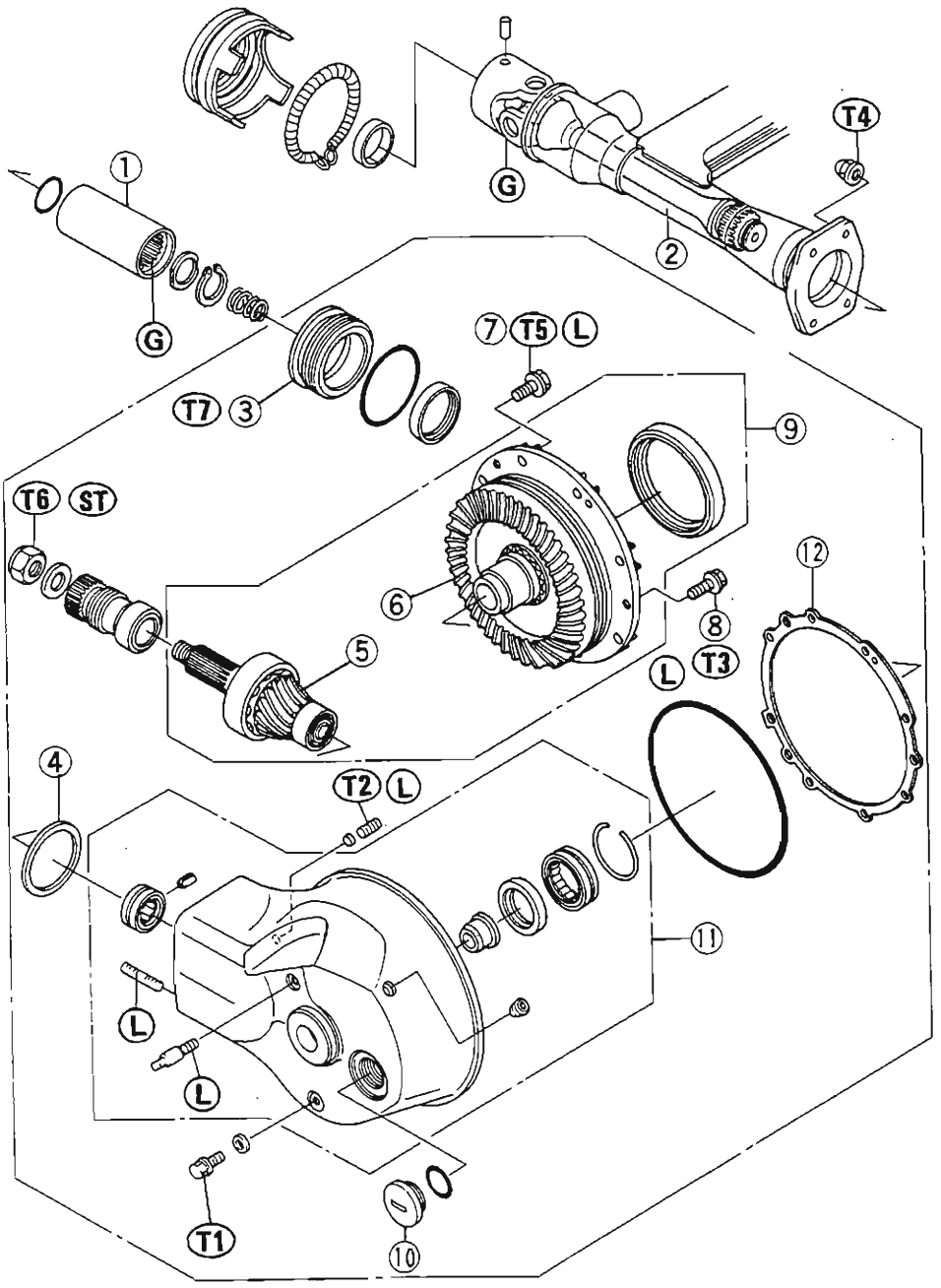

1. Propeller Shaft Joint
2. Propeller Shaft
3. Bearing Retainer (Left-handed Threads)
4. Pinion Gear Shim
5. Pinion Gear
6. Ring Gear
7. Bolt M10
8. Bolt M8
9. Final Bevel Gear Assembly
10. Filler Plug
11. Final Gear Case
12. Ring Gear Shim

G : Apply grease.
L : Apply non-permanent locking agent.
ST: Stake the fasteners.
T1: 88 N-m (0.90 kg-m, 78 in-lb)
T2: 16 N-m (1.6 kg-m, 11.5 ft-lb)
T3: 23 N-m (2.3 kg-m, 16.5 ft-lb)
T4: 29 N-m (3.0 kg-m, 22 ft-lb)
T5: 34 N-m (3.5 kg-m, 25 ft-lb)
T6: 120 N-m (12.0 kg-m, 87 ft-lb)
T7: 245 N-m (25 kg-m, 180 ft-lb)

http://manuals.magnamanic.com

Specifications

Item		Standard
Final Gear Case Oil:	Grade	API GL-5 Hypoid Gear Oil
	Viscosity	When above 5°C (41°F) SAE90
		When below 5°C (41°F) SAE80
	Amount	200 mL
	Oil Level	Bottom of filler opening
Final Gear Case:		
Final bevel gear backlash		0.06 – 0.09 mm (at gear hub spline)
		0.10 – 0.15 mm (at gear tooth)
Front Bevel Gear:		
Preload for driven gear bearings		0.5 – 0.9 N·m (0.05 – 0.09 kg-m, 4 – 8 in-lb)
Front bevel gear backlash		0.10 – 0.15 mm (at gear tooth)

Special Tools

Bearing Puller: 57001-158

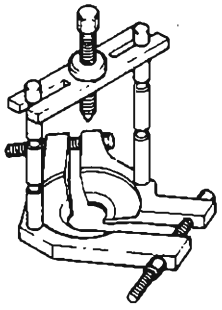

Adapter: 57001-317



Bearing Driver: 57001-382

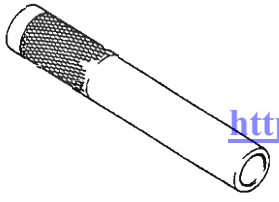

Damper Cam Holder: 57001-1025

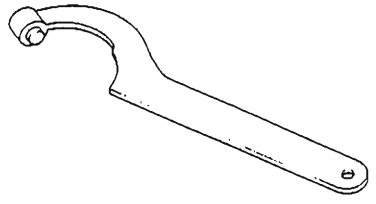

Driven Gear Holder: 57001-1027

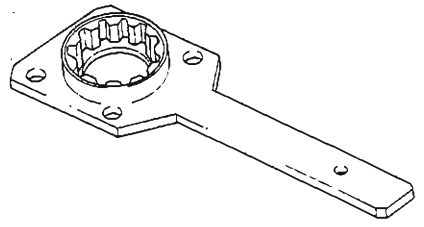

Dial Gauge Holder: 57001-1049

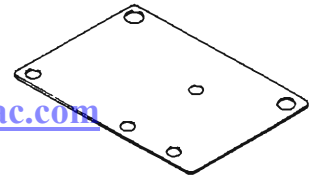

http://manuals.magnamaniac.com

Oil Seal & Bearing Remover: 57001-1058

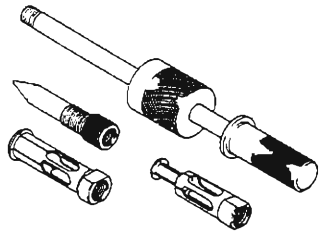

Bearing Driver Set: 57001-1129

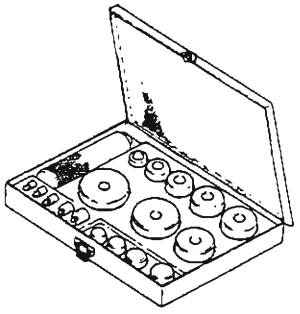

Oil Seal Driver: 57001-1104



Pinion Gear Holder: 57001-1165

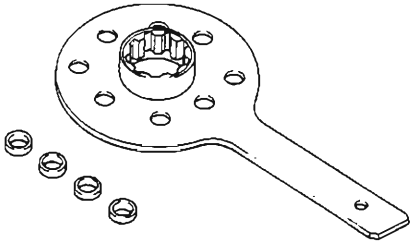

Drive Gear Holder: 57001-1226

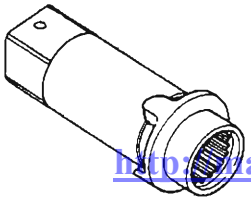

Jack Stand: 57001-1238

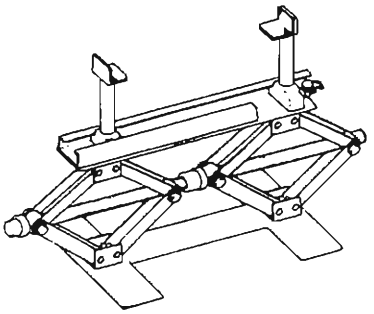

Attachment: 57001-1252

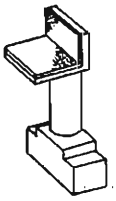

Final Gear Case Holder: 57001-1250

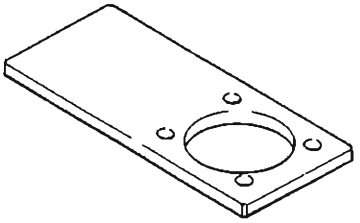

Bearing Retainer Wrench: 57001-1251

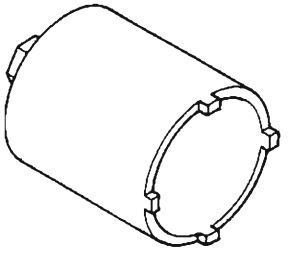

http://manuals.magnamaniac.com

Final Gear Case Oil

Oil Level Inspection

- Support the motorcycle perpendicular to the ground.
- Unscrew the filler plug. The oil level should come to the bottom of the filler opening.

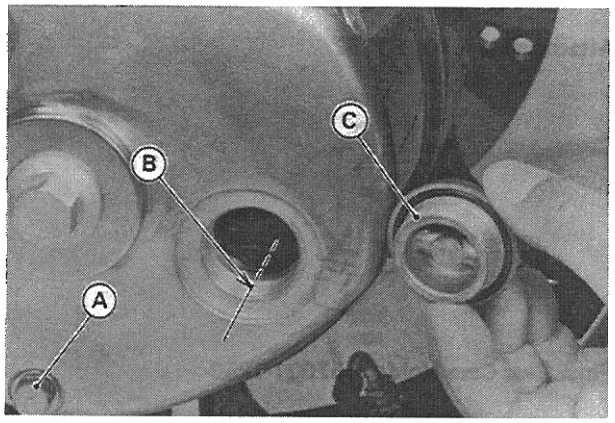

A. Drain Plug
B. Oil Level Line
C. Filler Plug

★If it is low, first check the final gear case for oil leakage, remedy it if necessary, and add oil through the filler opening. Use the same type and brand of oil that is already in the final gear case.

- Install the filler plug.

Oil Change

- Warm up the oil by running the motorcycle so that the oil will pick up any sediment and drain easily. Stop the motorcycle and turn it off.
- Place an oil pan beneath the final gear case, and remove the drain plug.

WARNING

○When draining or filling the final gear case, be careful that no oil gets on the tire or rim. Clean off any oil that inadvertently gets on them with a high flash-point solvent.

- After the oil has completely drained out, install the drain plug with a new gasket.
- Fill the final gear case with the specified oil and quantity.

Final Gear Case Oil:

Amount	**200 mL**
Grade	**API GL-5 hypoid gear oil**
Viscosity:	
When above 5°C (41°F)	**SAE 90**
When below 5°C (41°F)	**SAE 80**

NOTE

○*The term "GL-5" indicates a quality and additive rating. A "GL-6" rated hypoid gear oil can also be used.*

- Be sure the O-ring is in place, and install the filler plug.

Final Gear Case

Removal

★If the final gear case is to be disassembled, drain the final gear case oil.

- Remove the rear wheel (see Wheel/Tires chapter).
- Remove the left shock absorber from its studs by taking off the nuts.
- Remove the final gear case by taking off the nuts. The spring comes off with the case.

http://manuals.magnamaniac.com

NOTE

○*If the final gear case is full of oil, place the case so that the breather hole is on top.*

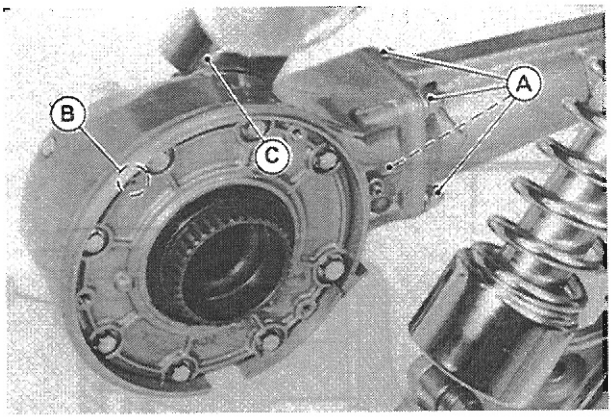

A. Final Gear Case Nuts
B. Breather Hole
C. Rear Shock Absorber (LH)

Installation Notes

- Lubricate the propeller shaft joint (see Propeller Shaft Joint Lubrication).
- Install the spring so that the small diameter end faces toward the final gear case.

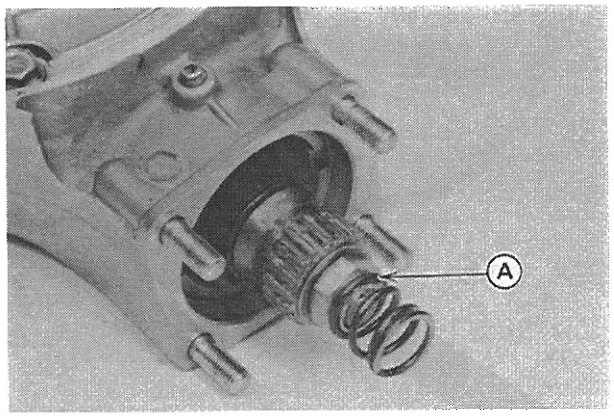

A. Small Diameter End

- Fit the pinion gear splines into the propeller shaft joint while turning the ring gear hub.
- Tighten the final gear case mounting nuts to the specified torque (see Exploded View).

★If the final gear case oil was drained, fill the case with oil.

Disassembly

- Remove the final gear case cover bolts.
- Use three cover bolts to remove the ring gear assembly from the gear case. The shim(s) comes off with the assembly.

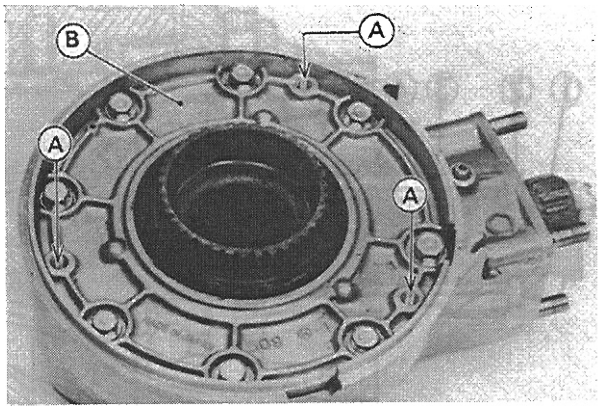

A. Jack the cover up with bolts.
B. Final Gear Case Cover

NOTE

○*Do not separate the ring gear assembly (ring gear, ring gear hub, and final gear case cover), but the oil seal can be removed.*

- To remove the ring gear oil seal, soak the ring gear assembly in oil heated to **120 – 150°C (248 – 302°F)**, then punch the oil seal and pry it out with an awl or other suitable tool. Be careful not to scratch the sealing surface on the ring gear hub.

CAUTION

○**Do not heat the case with a torch. This will warp the case.**

- Remove the snap ring and pull out the needle bearing outer race.

★If the oil seal is damaged remove it using the oil seal and bearing remover (special tool).

http://manuals.magnamaniac.com

Final Gear Case

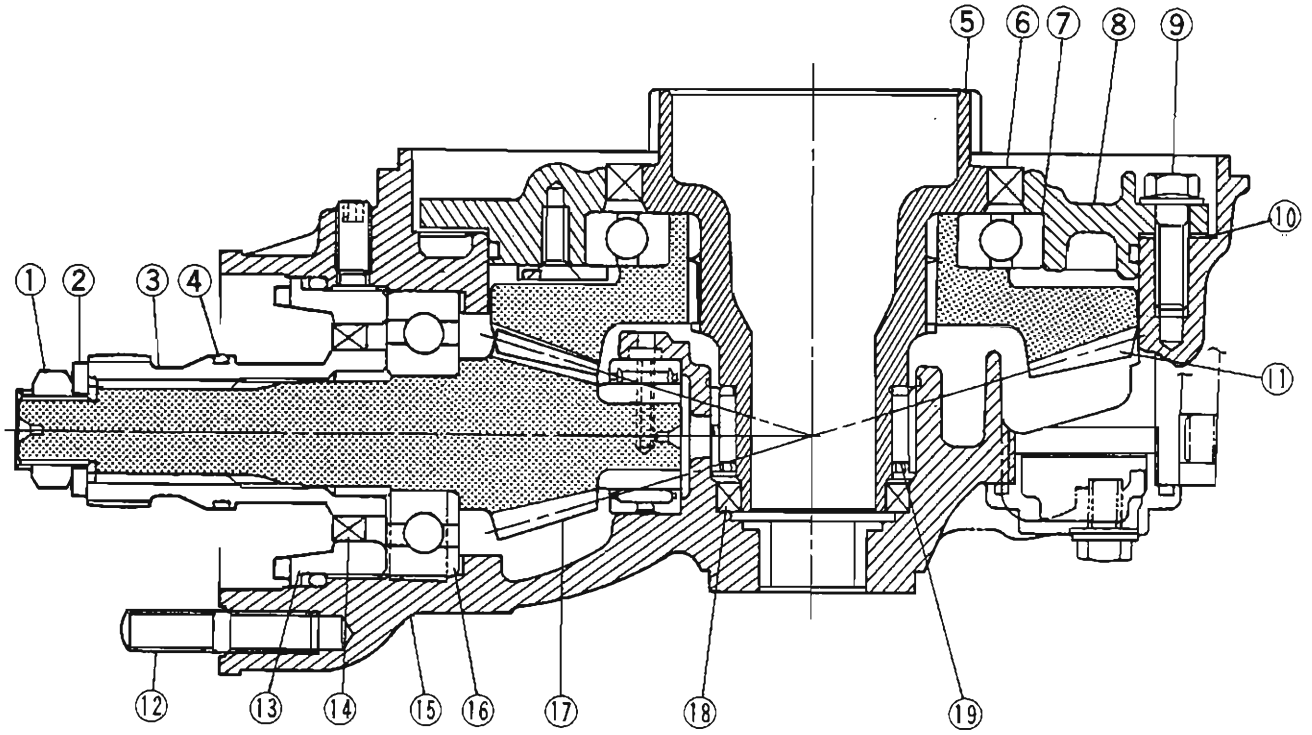

1. Pinion Gear Nut
2. Washer
3. Pinion Gear Joint
4. O-ring
5. Ring Gear Hub
6. Oil Seal
7. Ball Bearing
8. Final Gear Case Cover
9. Cover Mounting Bolts
10. Ring Gear Shim(s)
11. Ring Gear
12. Studs
13. Pinion Bearing Retainer
14. Oil Seal
15. Final Gear Case
16. Ball Bearing (Four-point Contact)
17. Pinion Gear
18. Oil Seal
19. Needle Bearing

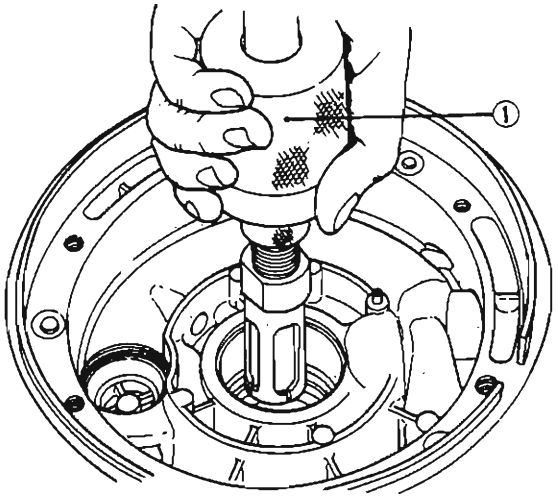

1. Oil Seal & Bearing Remover: 57001-1058

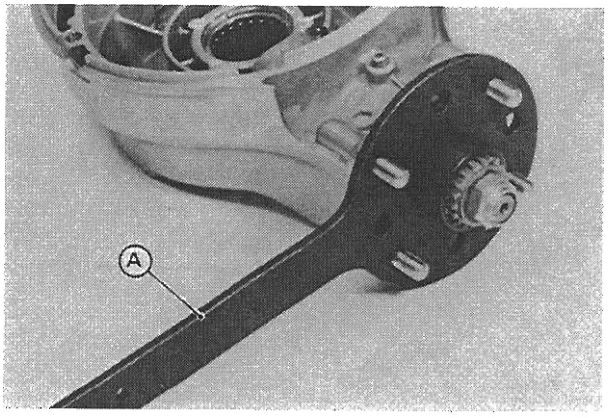

A. Pinion Gear Holder: 57001-1165

●Remove the oil seal on the pinion bearing retainer without removing the pinion.

○Unscrew the pinion nut using the pinion gear holder (special tool).

http://manuals.magnamanuals.com

○Remove the washer and pinion joint with the O-ring.

○Pull out the oil seal on the pinion bearing retainer using a suitable puller.

●Remove the pinion gear and its retainer.

○Remove the Allen plug and then unscrew the retainer with the final gear case holder and bearing retainer wrench (special tools).

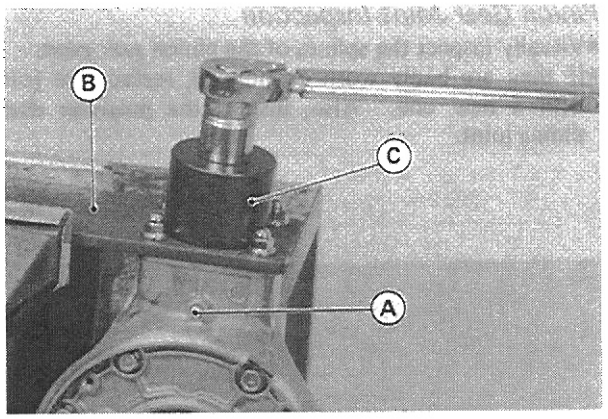

A. Allen Plug
B. Final Gear Case Holder (57001-1250)
C. Bearing Retainer Wrench (57001-1251)

NOTE

○*The bearing retainer has left-handed threads, therefore it must be turned clockwise in removal.*

○Take the retainer and pinion gear assembly out of the final gear case.
○Pull out the shim and plug from the final gear case.

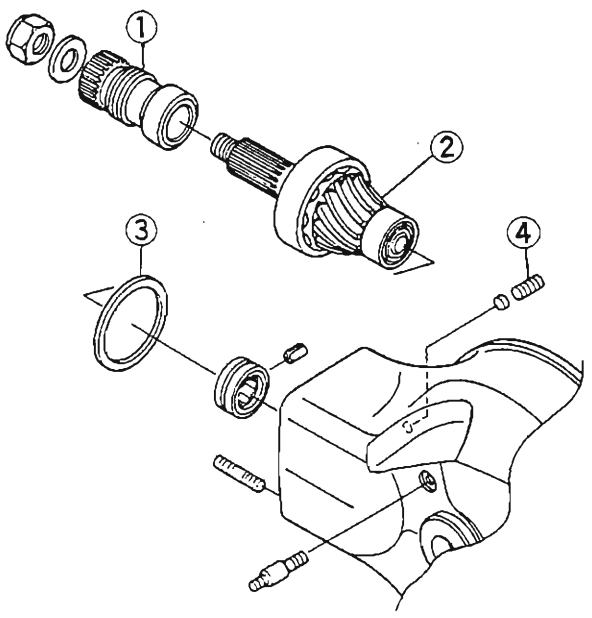

1. Pinion Gear Joint
2. Pinion Gear
3. Shim
4. Plug

●Use a suitable driver to drive in the oil seals being careful of installation direction and depth.

●Align the oil hole in the needle bearing outer race with the hole on the bearing housing (pinion gear side).

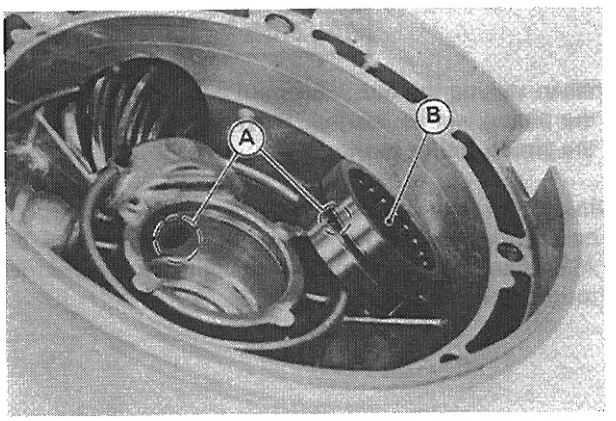

A. Oil Holes
B. Needle Bearing

Assembly Notes

http://manuals.magnamaniac.com

●The ring gear and pinion are lapped as a set in the factory to get the best tooth contact. They must be installed as a pair, never replace one without the other.

●Blow the breather hole in the final gear case cover clean with compressed air.

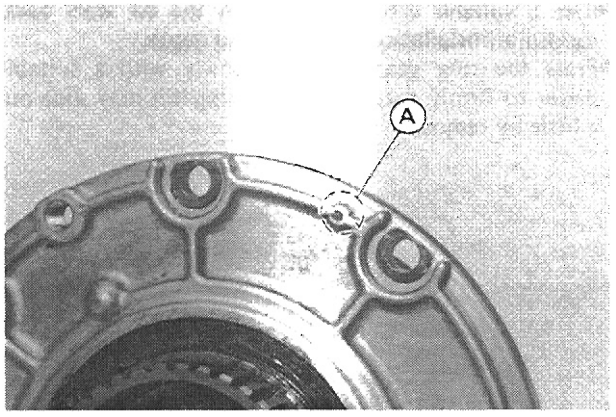

A. Breather Hole

●Reinstall the original ring gear shim(s) to keep the gear backlash and the tooth contact unchanged.
●Apply a non-permanent locking agent to the threads of the cover bolts, and tighten them to the specified torque (see Exploded View).
●Apply a non-permanent locking agent to the threads of each stud and install them to the case if they were removed.
●Install the pinion gear retainer. Note the following.
○Reinstall the original pinion gear shim(s) to keep the gear backlash and the tooth contact unchanged.
○Using the final gear case holder and bearing retainer wrench (special tools: 57001-1250 and 57001-1251), tighten the pinion gear retainer to the specified torque (see Exploded View).
○Using the pinion gear holder (special tool: 57001-1165), tighten the pinion nut to the specified torque (see Exploded View).
○Stake the pinion nut with a punch.

CAUTION

○When staking the nut, be careful not to apply shock to the pinion and its bearing. Such a shock could damage the pinion and/or bearing.

○Insert the plug into the Allen plug hole, and apply a non-permanent locking agent to the threads of the Allen plug, then tighten the Allen plug to the specified torque (see Exploded View).

Bevel Gear Inspection

●Visually check the bevel gears for scoring, chipping, or other damage.
★Replace the bevel gears as a set if either gear is damaged.

Pinion Gear Joint Inspection

●Visually inspect the splines of the pinion gear joint.
★If they are badly worn or chipped, replace the joint with a new one. Also, inspect the propeller shaft sliding joint.

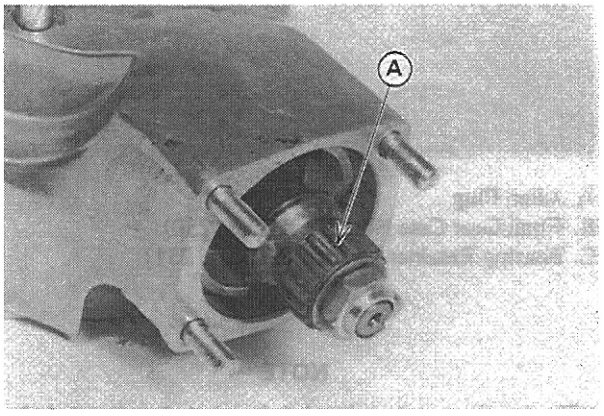

A. Check splined portion.

Ball Bearing Inspection

Since the ball bearing is made to extremely close tolerances, the wear must be judged by feel rather than measurement.
●Spin the bearing by hand to check its condition.
★If there bearing is noisy, does not spin smoothly, or has any rough spots, replace it (as a gear set).

Needle Bearing Inspection

●The rollers in a needle bearing normally wear very little, and wear is difficult to measure. Instead of measuring, inspect the bearing for abrasion, color change, or other damage.
★If there is any doubt as to the condition of a needle bearing, replace it.

Oil Seal Inspection

●Inspect the oil seals.
★Replace any if the lips are misshapen, discolored (indicating that the rubber has deteriorated), hardened, or otherwise damaged.

http://manuals.magnamania.com

Final Bevel Gear Adjustment

The **backlash** and **tooth contact pattern** of the bevel gears must be correct to prevent the gears from making noise and being damaged.

After replacing any of the backlash-related parts, be sure to check and adjust the backlash and tooth contact of the bevel gears. First, adjust backlash, and then tooth contact by replacing shims.

Backlash-Related Parts

1. Pinion Gear
2. Pinion Gear Shim(s)
3. Ring Gear Assembly
4. Ring Gear Shim(s)
5. Final Gear Case

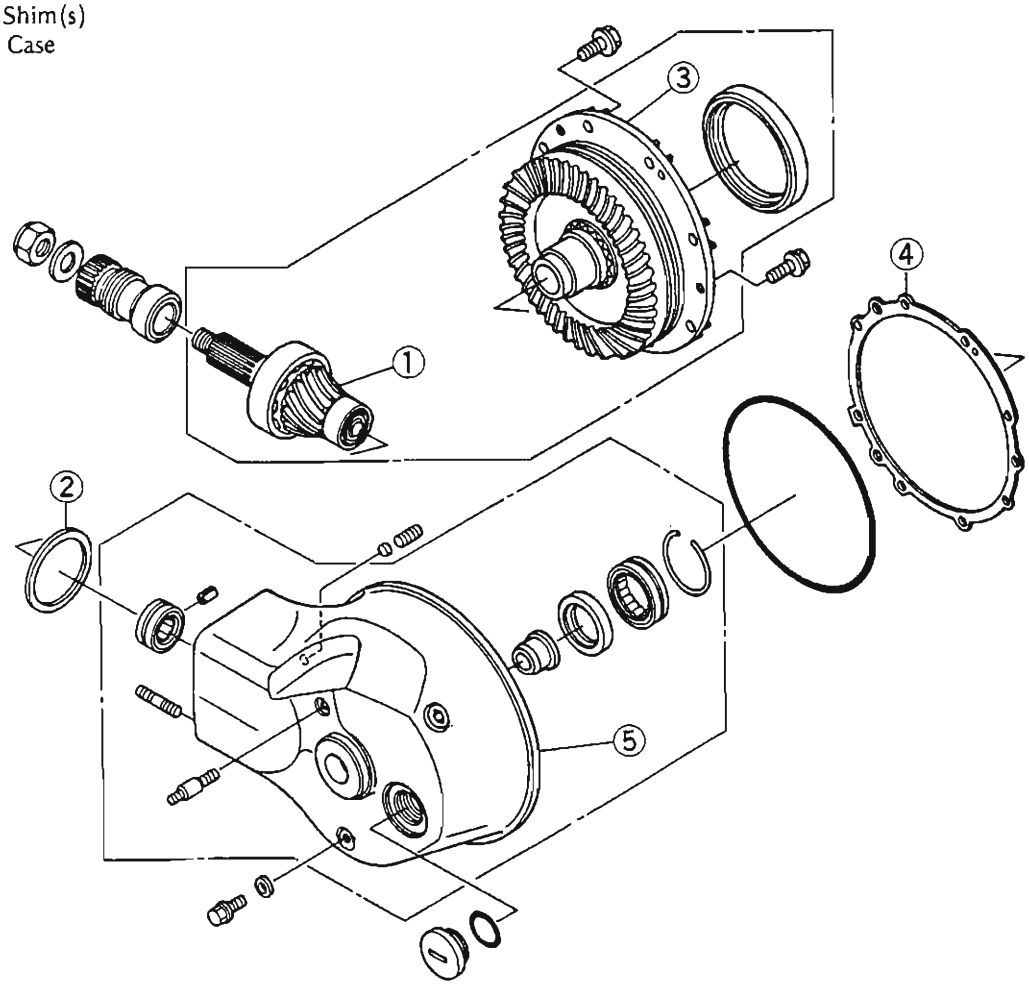

Ring Gear Shims for Backlash Adjustment

Thickness (mm)	Part Number
0.15	92025-1783
0.5	92025-1784
0.6	92025-1785
0.7	92025-1786
0.8	92025-1787
0.9	92025-1788
1.0	92025-1789
1.2	92025-1790

Pinion Gear Shims for Tooth Contact Adjustment

Thickness (mm)	Part Number
0.10	92025-1733
0.15	92025-1734
0.5	92025-1735
0.6	92025-1736
0.7	92025-1737
0.8	92025-1738
0.9	92025-1739
1.0	92025-1740
1.2	92025-1741

http://manuals.magnamaniac.com

NOTE

○*Use these shims for gear backlash and tooth contact adjustment.*

Backlash Adjustment

●Clean any dirt and oil off the bevel gear teeth.
●Press the ring gear assembly slowly with an oil seal driver (57001-1104) to firmly seat the ball bearing.
●Install the pinion gear assembly with the primary (**1.0 mm thickness**) shim, and tighten bearing retainer to the specified torque (see Exploded View).
●Install the ring gear assembly with the primary (**1.0 mm thickness**) shim, and tighten the cover mounting bolts to the specified torque (see Exploded View).
○Check the backlash during the tightening of the cover mounting bolts, and stop tightening them immediately if the backlash disappears. Then, change the ring gear shim to a thicker one.

CAUTION

○**Do not install the O-rings during adjustment.**

●Mount a dial gauge [D] on a vise so that the tip of the gauge is against the splined portion of the ring gear hub.
●To measure the backlash, turn the ring gear hub [B] back and forth [C] while holding the pinion gear steady with the pinion gear holder [A]. The difference between the highest and the lowest gauge reading is the amount of backlash.
○Measure backlash at three locations equally spaced on the splines.

Final Bevel Gear Backlash : 0.06 ~ 0.09 mm
(at ring gear hub splines)

Correct Tooth Contact Pattern

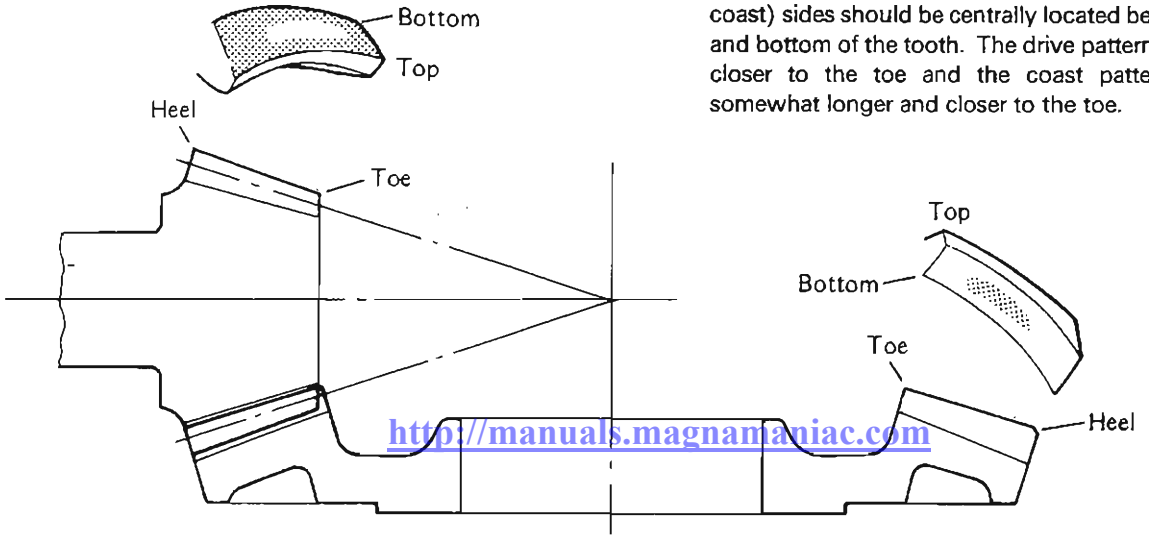

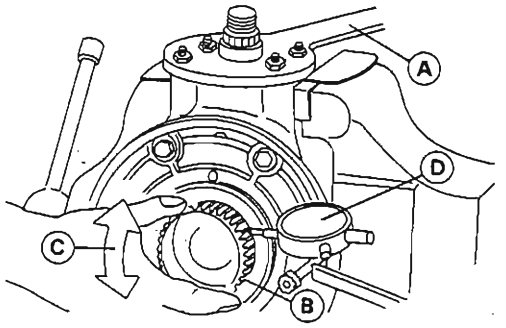

★If the backlash is not within the limit, replace the ring gear shims. To increase backlash, increase the thickness of the shim(s). To decrease backlash, decrease the thickness of the shim(s).
☆Change the thickness a little at a time.
●Re-check the backlash, and re-adjust as necessary.

Tooth contact adjustment

●Clean any dirt and oil off the bevel gear teeth.
●Apply checking compound to 4 or 5 teeth of the pinion gear.

NOTE

○*Apply checking compound to the teeth in a thin, even coat with a fairly stiff paint brush. If painted too thickly, the exact tooth pattern may not appear.*
○*The checking compound must be smooth and firm, with the consistency of tooth paste.*
○*Special compounds are available at automotive supply stores for the purpose of checking differential gear tooth patterns and contact.*

●Install the shim(s) and pinion gear assembly, and tighten the bearing retainer to the specified torque (see Exploded View).
●Install the shim(s) and ring gear assembly, and tighten the cover bolts to the specified torque (see Exploded View).
●Turn the pinion gear for one revolution [B] back and forth, while creating a drag on the ring gear hub [A].
●Remove the ring and pinion gear assemblies to check the drive pattern and coast pattern of the bevel gear teeth. The tooth contact patterns of both (drive and coast) sides should be centrally located between the top and bottom of the tooth. The drive pattern can be a little closer to the toe and the coast pattern can be a somewhat longer and closer to the toe.

http://manuals.magnamaniac.com

★If the tooth contact pattern is incorrect, replace the pinion gear shim(s), following the examples shown. Then erase the tooth contact patterns, and check them again. Also check the backlash every time the shim(s) are replaced. Repeat the shim change procedure as necessary.

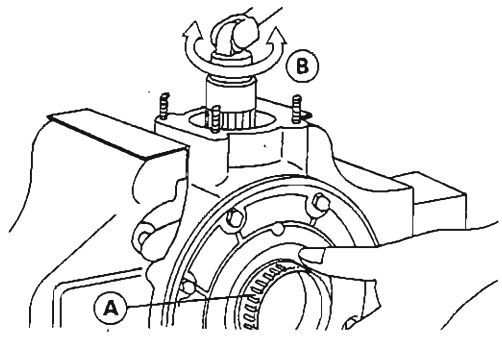

Incorrect Tooth Contact Patterns

NOTE

○*If the backlash is out of the standard range after changing the pinion gear shim(s), replace the ring gear shim(s) to correct the backlash before checking the tooth contact pattern.*

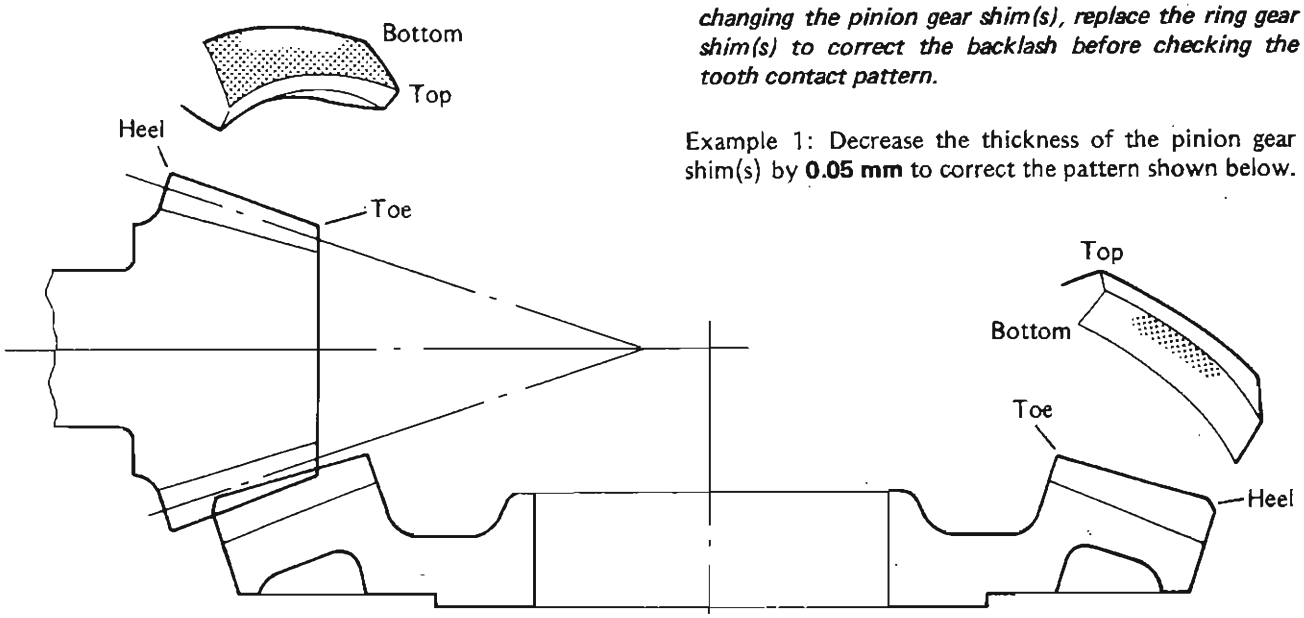

Example 1: Decrease the thickness of the pinion gear shim(s) by **0.05 mm** to correct the pattern shown below.

Example 2: Increase the thickness of the pinion gear shim(s) by **0.05 mm** to correct the pattern shown below.

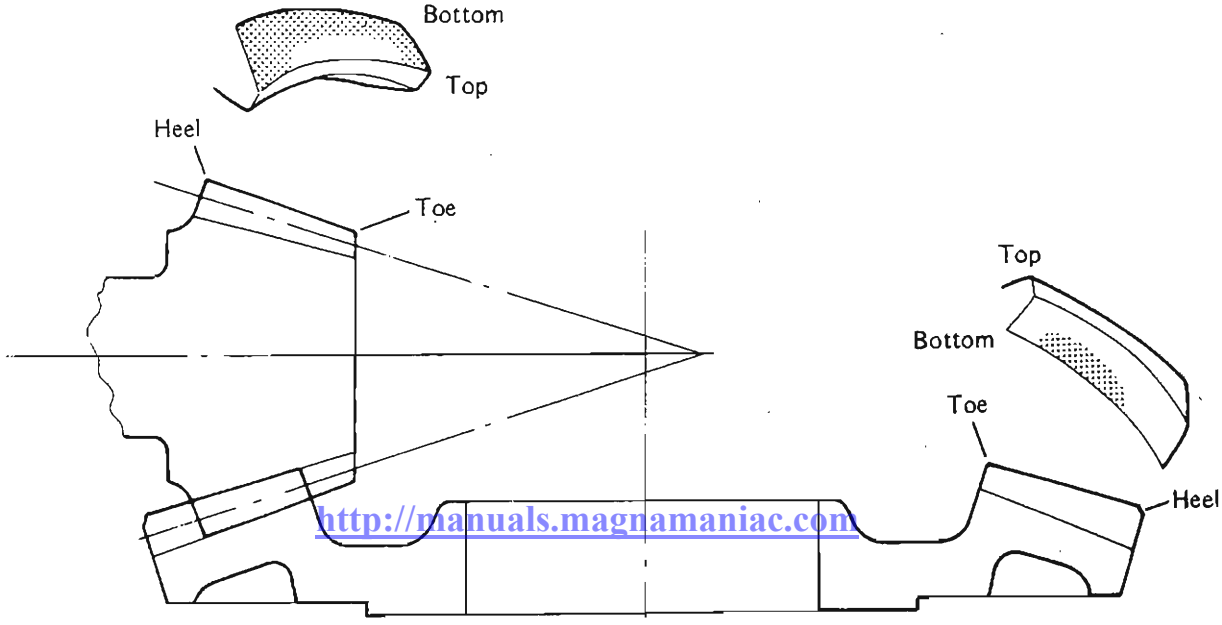

http://manuals.magnamaniac.com

Bevel Gear Inspection

●Remove the ring gear assembly and pinion gear from the final gear case (see Ring Gear Disassembly and Pinion Gear Disassembly).
●Visually check the bevel gears for scoring, chipping, or other damage.
★Replace the bevel gears as a set if either gear is damaged.

Pinion Gear Bearing Inspection

●Disassemble the pinion gear (see Pinion Gear Disassembly).
●Visually inspect the bearings for abrasion, color change, or other damage.
★If there is any doubt as to the condition of a bearing, replace it.

Oil Seal Inspection

●Inspect the oil seals.
★Replace any if the lips are misshapen, discolored (indicating that the rubber deteriorated), hardened, or otherwise damaged.

Propeller Shaft

Removal

●Remove the following.
Rear Wheel
Final Gear Case
●Remove the propeller shaft from the front driven gear joint.
○Turn the propeller shaft so that the locking pin access hole on the propeller shaft comes outside.

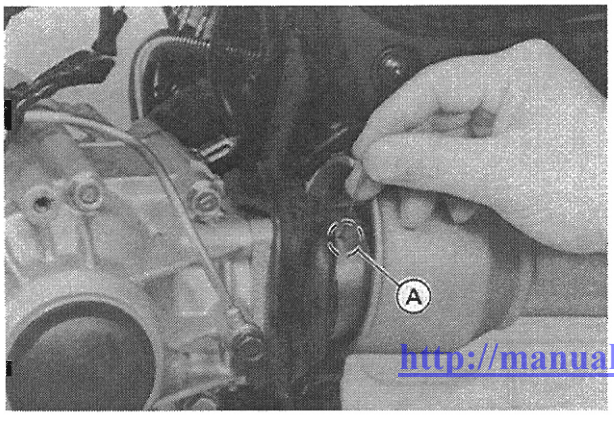

A. Locking Pin Access Hole

○Slip the propeller shaft off the driven gear joint by pushing on the lock pin through the access hole.

Disengagement of Propeller Shaft from Drive Gear Joint

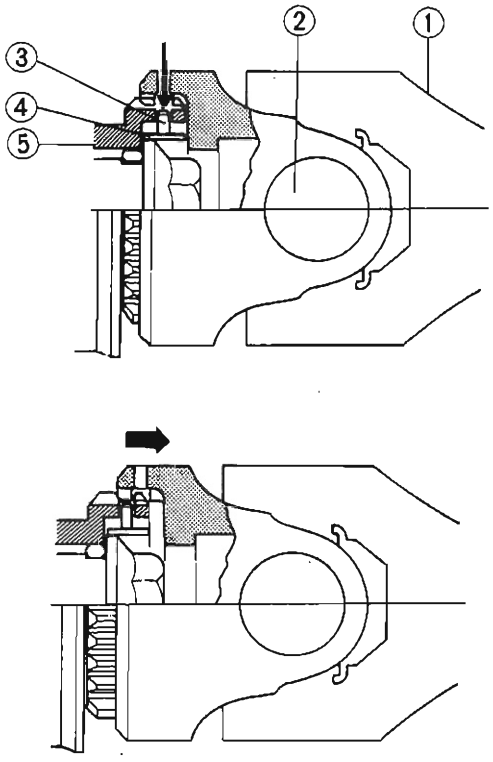

1. Propeller Shaft
2. Universal Joint
3. Locking Pin
4. Spring
5. Driven Gear Joint

http://manuals.magnamaniac.com

●Remove the circlip from the rear end of the propeller shaft using a circlip pliers.
●Remove the washer and pull out the propeller shaft sliding joint.

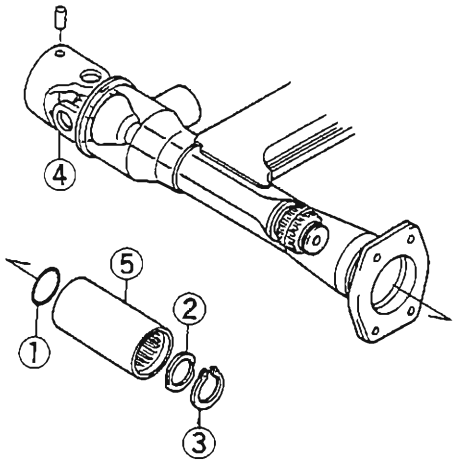

1. O-ring
2. Washer
3. Circlip
4. Propeller Shaft
5. Sliding Joint

Installation Notes

- Check the O-ring on the rear end of the propeller shaft for any kind of damage, and replace it if necessary.
- Lubricate the propeller shaft joint (see Propeller Shaft Joint Lubrication).
- After connecting the propeller shaft to the driven gear joint, pull the propeller shaft rearward to check that the shaft is secured in place by the locking pin.

Sliding Joint Lubrication

- Wipe off the old grease from the propeller shaft sliding joint and pinion joint.
- Pack the propeller shaft sliding joint with 20 mL (16 grams) of high temperature grease.

Propeller Shaft Sliding Joint Lubrication

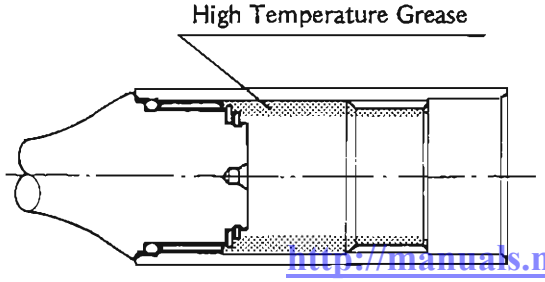

Propeller Shaft Inspection

- Check that the universal joint works smoothly without rattling or sticking.

★If it does not work smoothly, the needle bearings of the universal joint are damaged. Replace the propeller shaft assembly with a new one.

- Visually inspect the bearing of the shaft and the wear of the splined section at the rear end of the shaft.

★If it is bent at all, replace the propeller shaft assembly. Do not attempt to straighten a bent shaft.

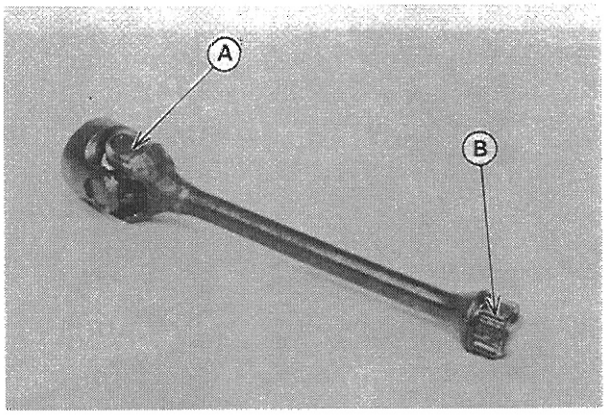

A. Check universal joint.
B. Inspect splined portion.

Sliding Joint Inspection

- Visually inspect the internal splines of the propeller shaft sliding joint.

★If they are badly worn or chipped, replace the joint with a new one.

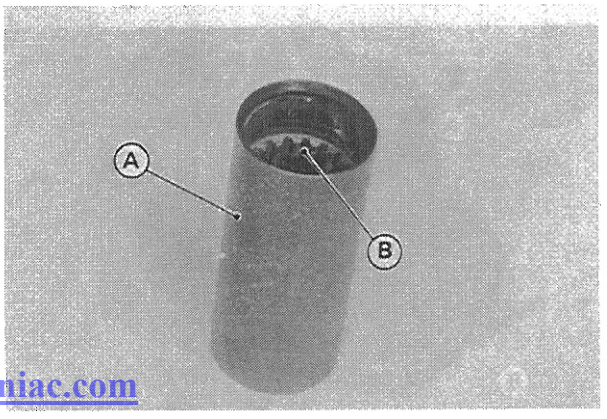

A. Sliding Joint
B. Check the splined portion.

http://manuals.magnamaniac.com

Front Bevel Gears

Front Gear Case Removal

●Remove the following.
Engine (see Engine Removal/Installation chapter)
Shift Linkage Lever Rear End
Front Gear Case

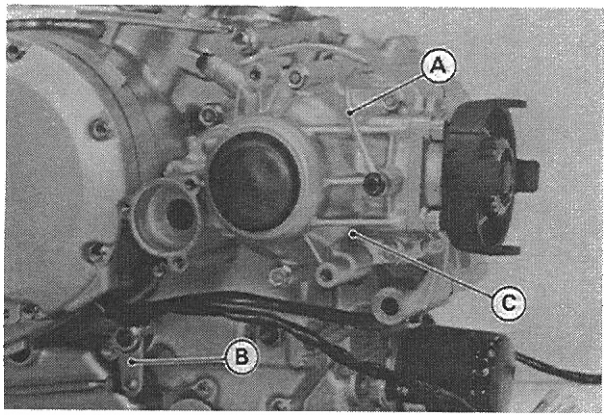

A. Oil Pipe
B. Shift Linkage Lever
C. Front Gear Case

○The cam follower and the damper spring come off with the gear case.

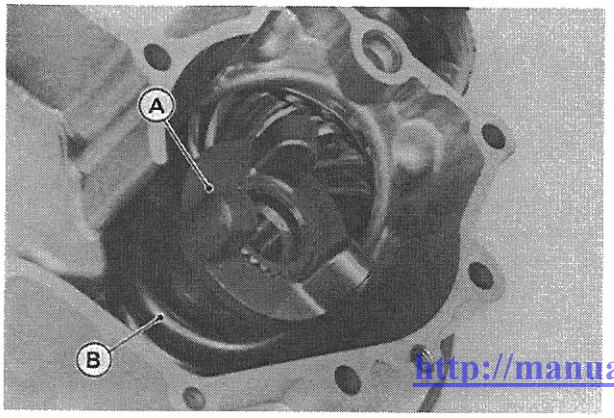

A. Cam Follower
B. Damper Spring

Front Gear Case Installation

●Note the following.
○Tighten the front gear case mounting bolts to the specified torque (see Exploded View).
○When installing the oil pipe, push it down and torque the front banjo bolt first to the specification.

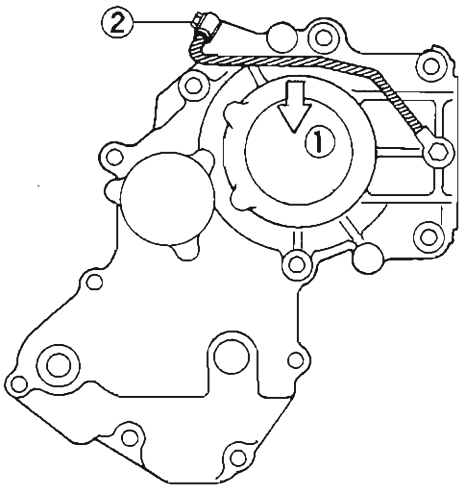

1. Push down this point.
2. Torque the front banjo bolt fast.

○Check that the shift shaft oil seal and replace it if necessary.

Front Gear Case Disassembly (including drive gear removal)

●Remove the following.
Front Gear Case
Cam Follower
Damper Spring
Rubber Boots
●Remove the driven gear assembly mounting bolts and pry the assembly off the case.

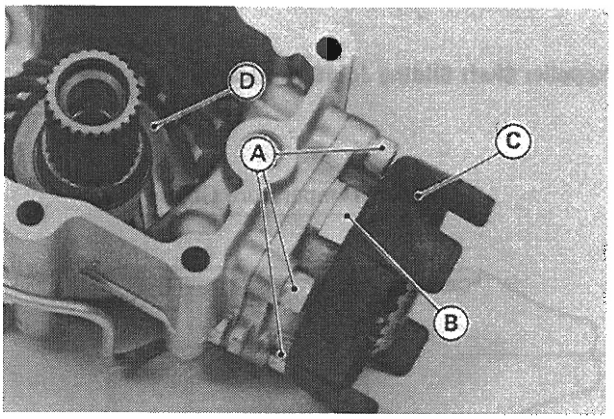

A. Driven Gear Assembly Mounting Bolts
B. Driven Gear Assembly
C. Rubber Boots
D. Drive Gear Assembly

http://manuals.magnamaniac.com

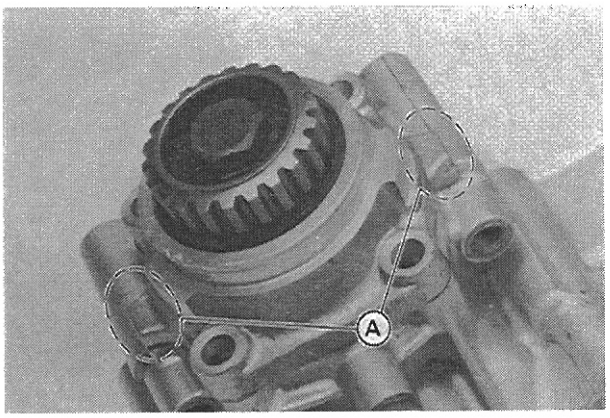

A. Pry Points

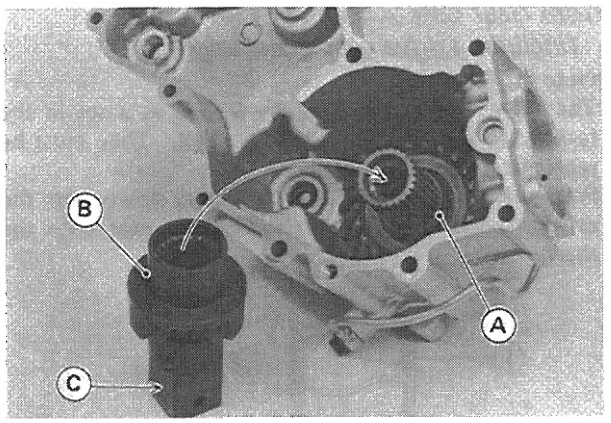

A. Drive Gear
B. Holder: 57001-1226
C. Catch the vise here.

●Remove the drive gear.
○Pry off the gear case cap with a suitable tools.

○Pull off the drive gear shaft with the drive gear, collar, and shim(s).
●Remove the bearing holder from the gear case.

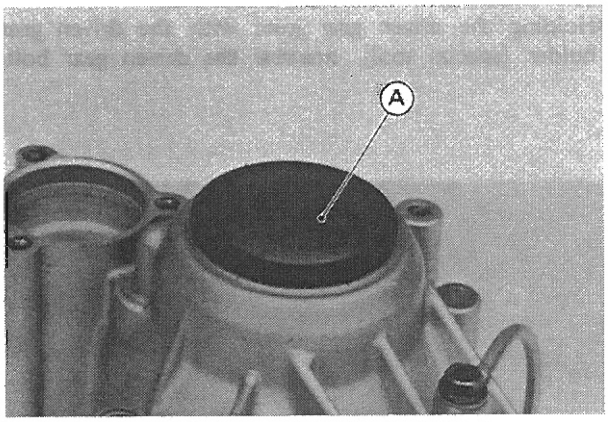

A. Cap

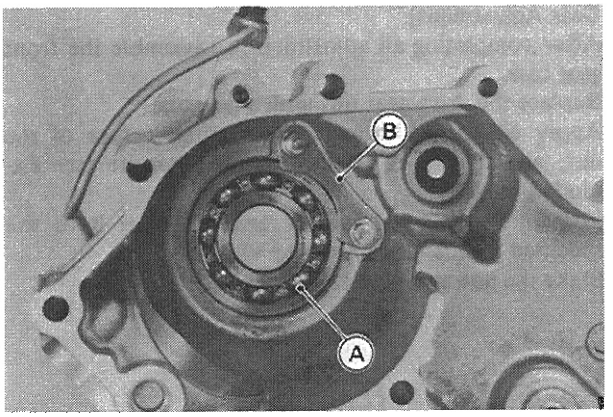

A. Bearing
B. Bearing Holder

http://manuals.magnamaniac.com

○Pry open the drive gear nut with a small chisel.
○Unscrew the drive gear nut holding the drive gear shaft with the holder (special tool).

●Remove the drive gear shaft ball bearing using the bearing driver set (special tool: 57001-1129).

Front Gear Case Assembly
(including drive gear installation)

●Note the following.
○The drive and driven gear are lapped as a set in the factory to get the best tooth contact. They must be replaced as a set.
○Press the drive gear and shaft assembly slowly with the driver (special tool) to firmly seat the gear onto the shaft.

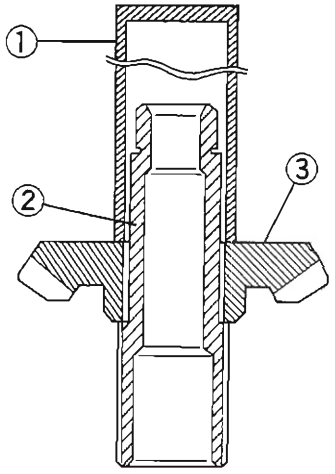

1. Driver: 57001-382
2. Shaft
3. Drive Gear

●Be sure to check and adjust the bearing preload and the bevel gear backlash and tooth contact, when any of the backlash-related parts are replaced (see Front Bevel Gear Adjustment).
●After completing all adjustment, re-assemble the front gear case.
○Replace the drive gear nut with a new one.
○Apply oil to the threads and seating surface of the nut, and tighten it to the specified torque (see Exploded View).
○Loosen the nut completely and retighten it to the specified torque (see Exploded View).
○Stake the nut to secure it in place.

CAUTION

○When staking the nut, be careful not to apply shock to the shaft and its bearing. Such a shock could damage the shaft and/or bearing.

○Install the driven gear assembly so that the oil hole on the housing aligns with the oil hole in the case.
○Install the shim.
○Tighten the driven gear assembly mounting bolts to the specified torque (see Exploded View).

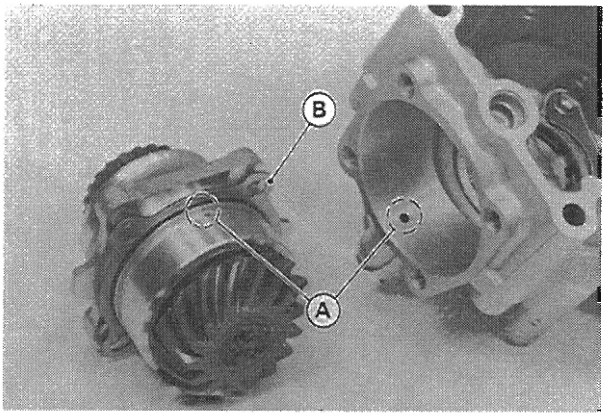

A. Oil Holes B. Shims

★If the oil pipe was removed, use a new flat washer on each side of the fittings, and tighten the banjo bolts to the specified torque (see Exploded View).

Driven Gear Disassembly

●Holding the driven gear joint with the driven gear holder (special tool), unscrew the driven gear bolt.

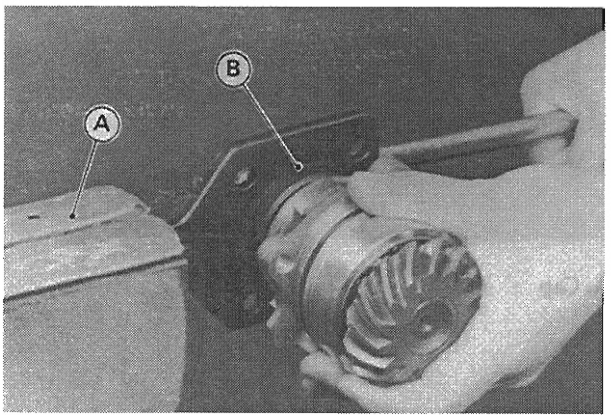

A. Vise
B. Driven Gear Holder: 57001-1027

●Remove the driven gear joint with the O-ring.

http://manuals.magnamaniac.com

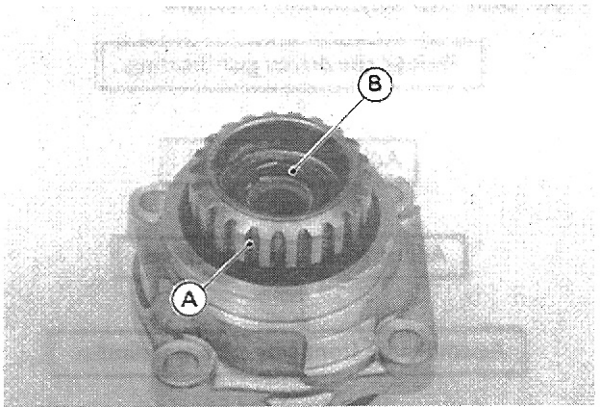

A. Joint B. O-ring

●Remove the driven gear from the bearing housing.
●Remove the collar and the spacer from the driven gear.
●Remove the oil seal from the housing with a hook, and pull the tapered roller bearing out of the housing.
●Remove the tapered roller bearing which is pressed onto the driven gear shaft with the bearing puller and adapter (special tool: 57001-158 and 57001-317).

Driven Gear Assembly

●Note the following.
○The drive and driven gears are lapped as a set at the factory to get the best tooth contact. They must be replaced as a set.
○Be sure to check and adjust the bearing preload and the bevel gear backlash and tooth contact (see Front Bevel Gear Adjustment).
○Drive the tapered roller bearing inner race onto the driven gear shaft using the bearing driver (special tool).

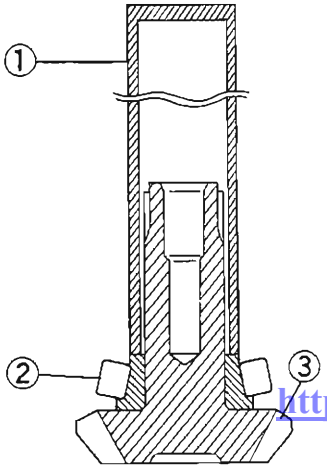

1. Driver: 57001-382
2. Roller Bearing
3. Driven Gear

http://manuals.magnamaniac.com

●After completing the bearing preload adjustment, re-assemble the driven gear assembly.
○Using the bearing driver set (special tool: 57001-1129), press the oil seal in until the face of the seal is level with the end of the bearing housing hole.
○Tighten the driven gear bolt to the specified torque (see Exploded View).
○Stake the driven gear bolt to prevent it from loosening.

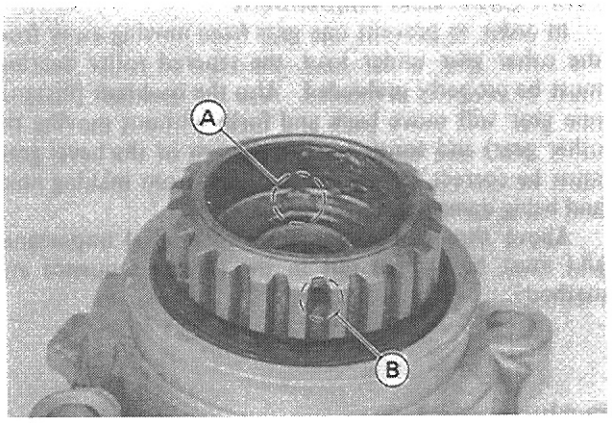

A. Staking Point B. Pin Hole

CAUTION

○When staking the bolt, be careful not to apply shock to the driven gear and their bearings. Such a shock could damage the driven gear and/or bearings.

Damper Cam Removal

●Remove the front gear case.
●Insert a bolt (φ12 mm, L100 mm) into the engine mounting bolt hole as shown.
●Holding the damper cam with the damper cam holder (special tool), unscrew the damper cam nut using a deep socket.

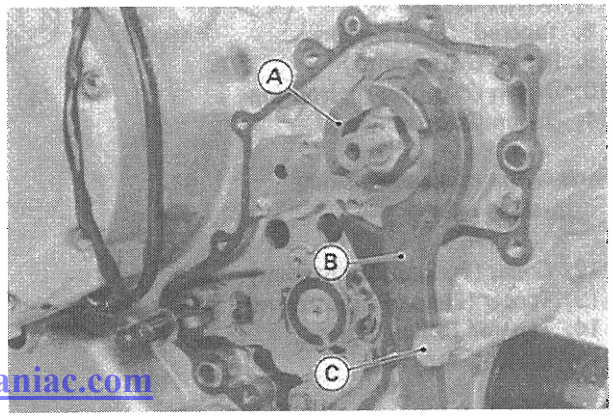

A. Damper Cam C. Bolt
B. Holder: 57001-1025

Damper Cam Installation Notes

●Replace the damper cam nut with a new one.
●Tighten the damper cam nut to the specified torque (see Exploded View).
○Apply a small amount of oil to the threads and the seating surface of the nut.

Front Bevel Gear Adjustment

In order to prevent one gear from moving away from the other gear under load, the tapered roller bearings must be properly **preloaded**. Also the **backlash** (distance one gear will move back and forth without moving the other gear) and **tooth contact pattern** of the bevel gears must be correct to prevent the gears from making noise and being damaged.

Above three adjustments are of critical importance and must be carried out in the correct sequence and method.

Front Bevel Gear Adjustment Procedure

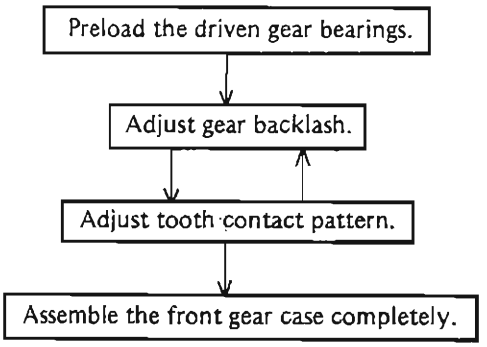

When any of the backlash-related parts are replaced, or the driven gear bolt is loosened; even if the purpose is not to replace the parts, be sure to check and adjust the bearing preload and the bevel gear backlash and tooth contact by replacing shims.

Backlash-related Parts

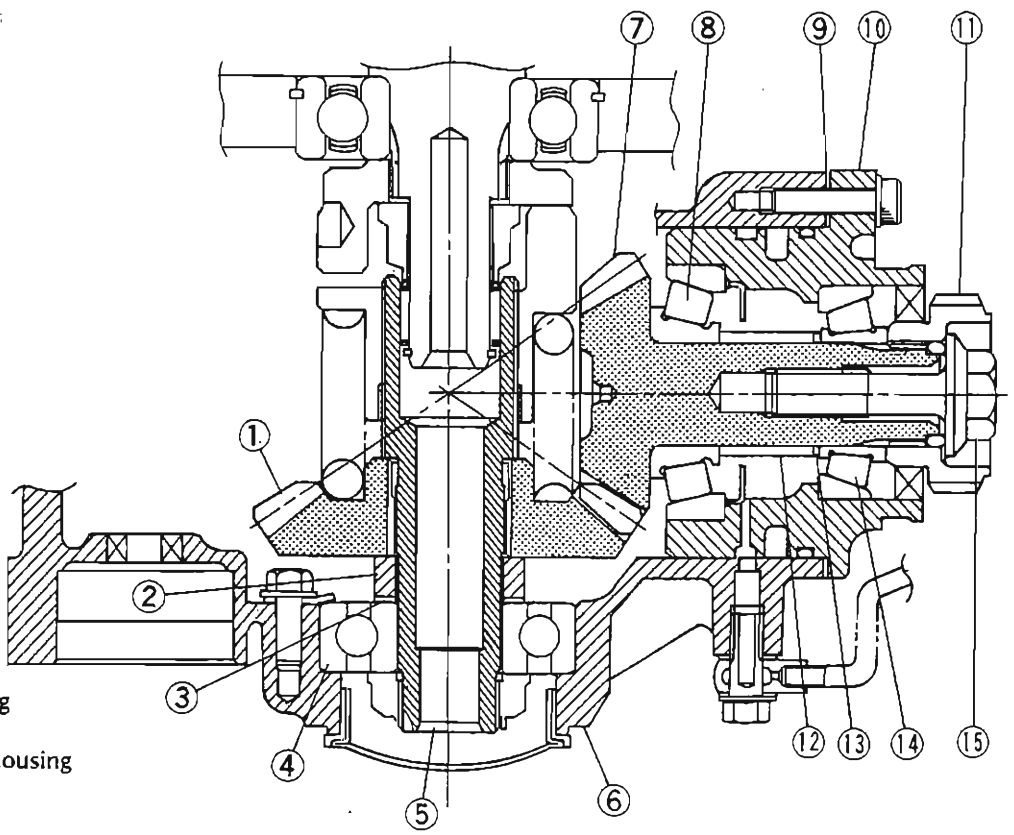

1. Drive Gear
2. Collar
3. Drive Gear Shim(s)
4. Ball Bearing
5. Drive Gear Shaft
6. Front Gear Case
7. Driven Gear
8. Tapered Roller Bearing
9. Driven Gear Shim(s)
10. Driven Gear Bearing Housing
11. Driven Gear Joint

Parts which influence bearing preload only

12. Collar (Preload Adjustment)
13. Spacer (Preload Adjustment)
14. Tapered Roller Bearing
*15. Driven Gear Bolt

*Preload adjustment is necessary whenever the bolt is loosened, even if the purpose is not to replace the parts.

http://manuals.magnamaniac.com

Preload adjustment

●Install the driven gear assembly, and tighten the driven gear nut to the specified torque (see Exploded View). Do not install the oil seal and do not stake the bolt until the correct bearing preload is obtained.

CAUTION

To start with, choose a shim or collar so that the bearings are just SNUG with NO play and also with NO preload.
Any over-preload on the bearings could damage the bearings.

●Apply a little engine oil to the bearings, and turn the gear shaft more than 5 turns to allow the bearings to seat.

●Measure the bearing preload. Bearing preload is defined as the force or torque which is needed to start the gear shaft turning.

Preload for Driven Gear Bearing

Using Spring Scale:
2.5 – 4.5 N (0.25 – 0.45 kg, 0.6 – 1.0 lb)

Using Torque Wrench:
0.5 – 0.9 N-m (0.05 – 0.09 kg-m, 4 – 8 in-lb)

NOTE

○*Preload can be measured either with a spring scale or a beam-type torque wrench. When measured with a spring scale, the preload is designated by force (N, kg, lb), and when measured with a torque wrench, it is designated by torque (N-m, kg-m, in-lb).*

○*Using Spring Scale:*

Hook the spring scale on the handle at a point 200 mm apart from the center of the gear shaft.

Hold the bearing housing in a vise so that the gear shaft axis is vertical. Apply force to the handle horizontally and at a right angle to it.

http://manuals.magnamaniac.com

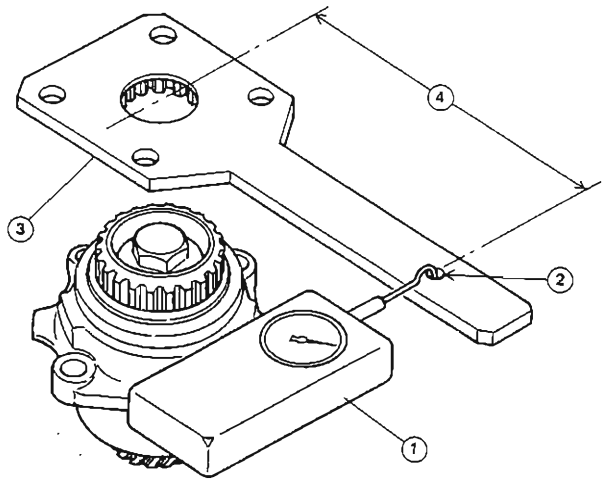

1. Spring Scale
2. Hole
3. Driven Gear Holder: 57001-1027
4. 200 mm

★If the preload is out of specified range, replace the bearing collar and/or spacer. To increase preload, decrease the stack length of the collar and spacer. To decrease preload increase the stack length of the collar and spacer.

★Change the stack length a little at a time.

●Re-check the bearing preload, and re-adjust if necessary.

Collars for Preload Adjustment

Length (mm)	Part Number
22.8	92027-1152
22.9	92027-1153
23.0	92027-1154
23.1	92027-1155
23.2	92027-1156
23.3	92027-1157
23.4	92027-1158
23.5	92027-1159
23.6	92027-1160
23.7	92027-1161
23.8	92027-1162
23.9	92027-1163
24.0	92027-1164
24.1	92027-1165

Spacers for Preload Adjustment

Thickness (mm)	Part Number
1.70	92025-1072
1.72	92025-1073
1.74	92025-1074
1.76	92025-1075
1.78	92025-1076
1.80	92025-1077

Bearing Preloading Mechanism

(A) Before Tightening

(B) After Tightening

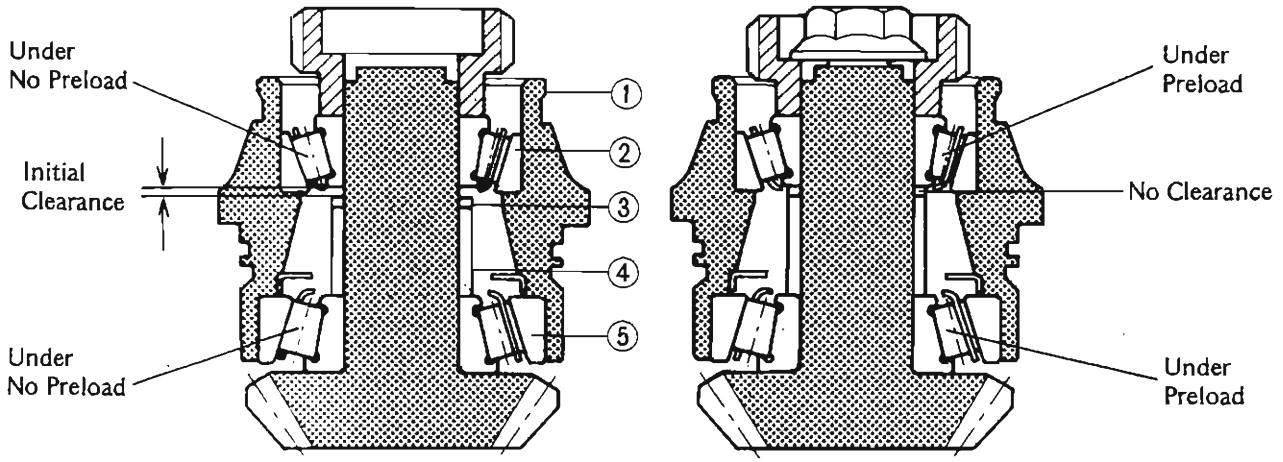

1. Bearing Housing
2. Tapered Roller Bearing
3. Spacer
4. Collar
5. Tapered Roller Bearing

Backlash adjustment

●Clean any dirt and oil off bevel gear teeth.

●Install the drive gear with the primary shim (1.0 mm thickness), and tighten the nut to the specified torque (see Exploded View).

NOTE

○*Do not stake the head of the nut until both backlash and tooth contact adjustments are finished.*

●Install the driven gear assembly to the front gear case with the primary shim (1.0 mm thickness), and tighten the mounting bolts to the specified torque (see Exploded View).

○Check backlash during the tightening of the mounting bolts, and stop tightening them immediately if the backlash disappears. Then, change the shim to a thicker one.

●Install the dial gauge holder (special tool) with 6 mm bolts and nuts on the front gear case to mount a dial gauge.

●Set up a dial gauge against a drive gear tooth to check gear backlash. The gauge stem must be in line with the direction of tooth travel.

●To measure the backlash, move the drive gear back and forth while holding the driven gear steady with a suitable tool. The Difference between the highest and lowest gauge readings is the amount of backlash.

★If the backlash is not within the limit, replace the gear shim(s) at the drive and/or driven gear. To increase backlash, increase the thickness of the shim(s). To decrease backlash, decrease the thickness of the shim(s).

☆Change the thickness a little at a time.

●Re-check the backlash, and re-adjust as necessary.

NOTE

○*It is OK to pack two shims. Do not pack three or more shims.*

http://manuals.magnamaniac.com

Front Bevel Gear Backlash (at the gear tooth)

0.10 – 0.15 mm

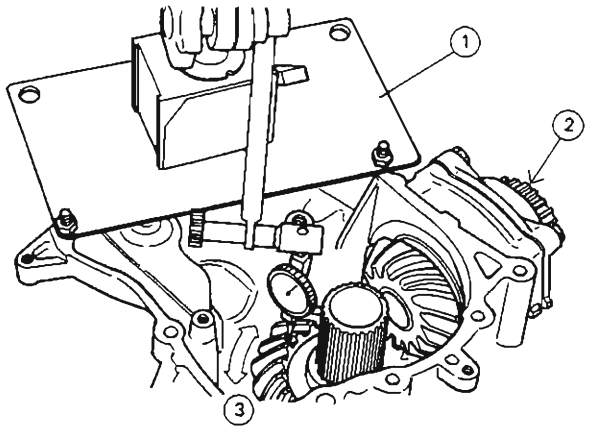

1. Holder: 57001-1049
2. Hold the driven gear.
3. Move the drive gear.

Shims for Drive Gear

Thickness (mm)	Part Number
0.15	92025-1688
0.5	92025-1689
0.6	92025-1690
0.7	92025-1691
0.8	92025-1692
0.9	92025-1693
1.0	92025-1694
1.1	92025-1695
1.2	92025-1696

Shims for Driven Gear

Thickness (mm)	Part Number
0.1	92025-1826
0.15	92025-1818
0.5	92025-1819
0.6	92025-1820
0.7	92025-1821
0.8	92025-1822
0.9	92025-1823
1.0	92025-1824
1.2	92025-1825

Tooth contact adjustment

http://manuals.magnamaniac.com

- Clean any dirt and oil off the bevel gear teeth.
- Apply checking compound to 4 or 5 teeth on the driven gear.

NOTE

- *Apply checking compound to the teeth in a thin, even coat with a fairly stiff paint brush. If painted too thickly, the exact tooth pattern may not appear.*
- *The checking compound must be smooth and firm, with the consistency of tooth paste.*
- *Special compounds are available from automotive supply stores for the purpose of checking differential gear tooth patterns and contact. use this for checking the bevel gears.*

- Turn the driven gear for 3 or 4 revolutions in the drive and reverse (coast) directions, while creating a drag on the drive gear.
- Check the drive pattern and coast pattern of the bevel gear teeth. The tooth contact patterns of both drive and coast sides should be centrally located between the top and bottom of the tooth, and little closer to the toe of the tooth.
- ★If the tooth contact pattern is incorrect, replace the shim(s) at the drive gear and shim(s) at the drive gear, following the examples shown. Then erase the tooth contact patterns, and check them again. Also check the backlash every time the shims are replaced. Repeat the shim change procedure as necessary.

NOTE

- *If the backlash goes out of standard range after changing shims, correct the backlash before checking the tooth contact pattern.*
- *It is OK to pack two shims. Do not pack three or more shims.*

Correct Tooth Contact Pattern

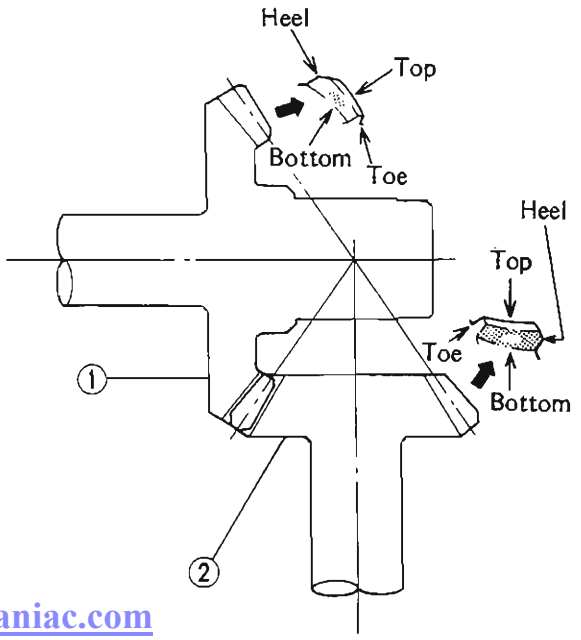

1. Drive Gear
2. Driven Gear

Incorrect Tooth Contact Patterns

Example 1: Increase the thickness of the drive gear shim(s) by 0.05 mm, and/or increase the thickness of the driven gear shim(s) by 0.05 mm to correct the pattern shown below. Repeat in 0.05 mm steps if necessary.

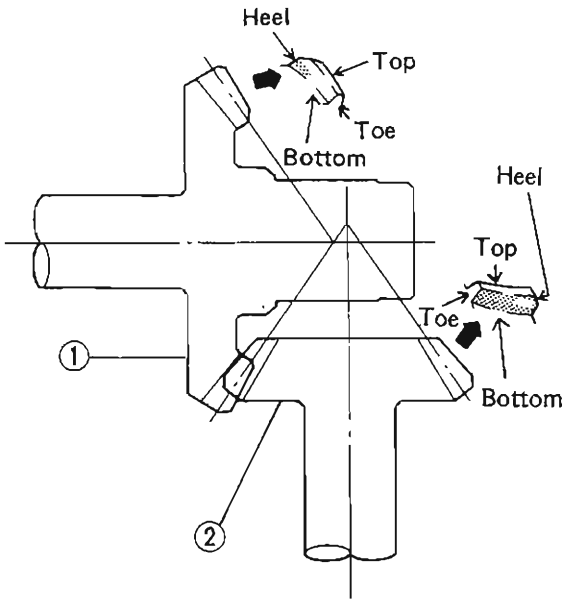

Example 2: Decrease the thickness of the drive gear shim(s) by 0.05 mm, and/or decrease the thickness of the driven gear shim(s) by 0.05 mm to correct the pattern shown below. Repeat in 0.05 mm steps if necessary.

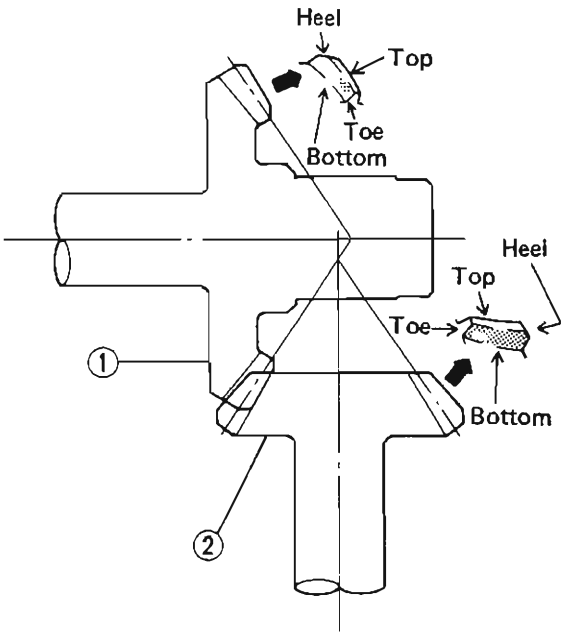

1. Drive Gear
2. Driven Gear

Bevel Gear Inspection

- Visually check the bevel gears for scoring, chipping, or other damage.
- ★Replace the bevel gears as a set if either gear is damaged.

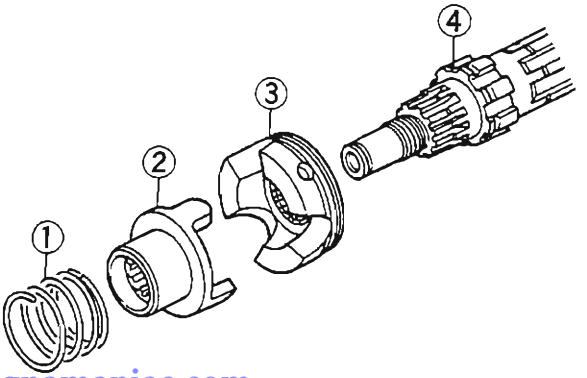

Cam Damper Inspection

http://manuals.magnamaniac.com

- Visually inspect the damper cam, cam follower, spring, and shaft.
- ★Replace the part if it appears damaged.

1. Spring
2. Cam Follower
3. Damper Cam
4. Output Shaft

Ball Bearing Inspection

- Since the ball bearing is made to extremely close tolerances, the wear must be judged by feel rather than measurement. Clean the bearing in a high flash-point solvent, dry it (do not spin the bearing while it is dry), and oil it with engine oil.
- Spin the bearing by hand to check its condition.

★If the bearing is noisy, does not spin smoothly, or has any rough spots, replace it.

Tapered Roller Bearing Inspection

- Visually inspect the bearing for abrasion, color change, or other damage.

★If there is any doubt as to the condition of a bearing, replace it.

Needle Bearing Inspection

- The rollers in a needle bearing normally wear very little, and wear is difficult to measure. Instead of measuring, visually inspect the bearing for abrasion, color change, or other damage.

★If there is any doubt as to the condition of a needle bearing, replace it.

Oil Seal Inspection

- Inspect the oil seals.

★Replace it if the lips are misshapen, discolored (indicating that the rubber has deteriorated), hardened, or otherwise damaged.

http://manuals.magnamaniac.com

Brakes

Table of Contents

Exploded View 11-2
Specifications 11-4
Special Tools 11-4
Brake Pedal 11-5
  Brake Pedal Position Adjustment 11-5
Caliper 11-5
  Front Caliper Removal 11-5
  Rear Caliper Removal 11-6
  Caliper Installation 11-6
  Disassembly Notes 11-6
  Assembly Notes 11-6
Brake Pads 11-6
  Removal 11-6
  Installation Notes 11-7
  Lining Wear 11-7
Master Cylinders 11-7
  Front Master Cylinder Installation 11-7
  Rear Master Cylinder Removal 11-7
  Rear Master Cylinder Installation 11-8
  Inspection and Adjustment after Installation 11-8
  Disassembly 11-8
  Assembly 11-8
  Inspection (Visually) 11-8
Brake Disc 11-9
  Wear 11-9
  Warp 11-9
Brake Fluid 11-9
  Fluid Level Inspection 11-9
  Brake Fluid Change 11-10
  Bleeding the Brake Line 11-10

http://manuals.magnamaniac.com

Exploded View

T1 : 5.9 N-m (0.60 kg m, 52 in-lb)
T2 : 7.8 N-m (0.80 kg m, 69 in-lb)
T3 : 8.8 N-m (0.90 kg m, 78 in-lb)
T4 : 27 N-m (2.8 kg m, 20 ft-lb)
T5 : 25 N-m (2.5 kg m, 18.0 ft-lb)
T6 : 32 N-m (3.3 kg m, 24 ft-lb)

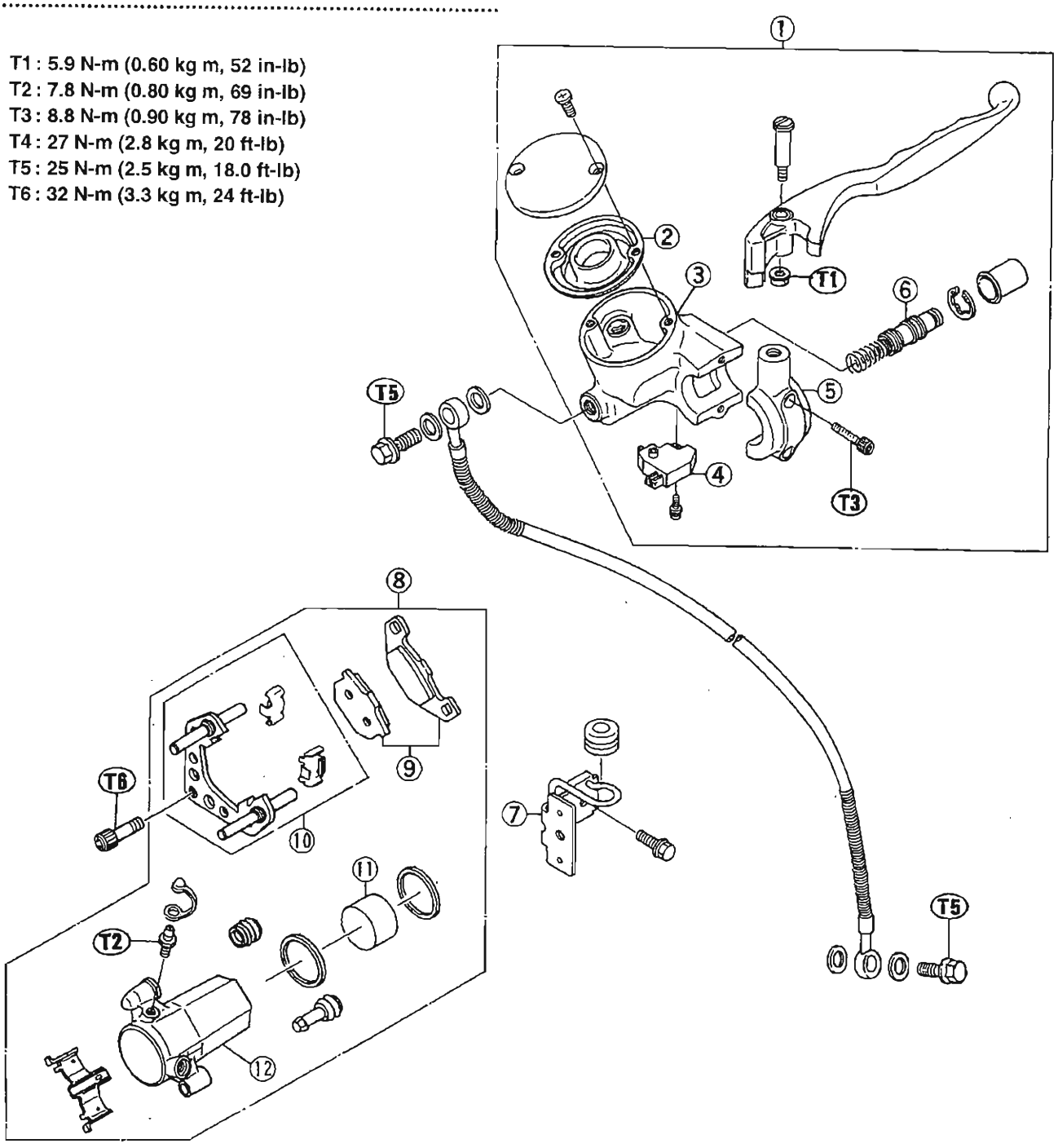

1 . Front Master Cylinder Assembly
2 . Diaphragm
3 . Master Cylinder
4 . Front Brake Light Switch
5 . Master Cylinder Clamp
6 . Piston
7 . Brake Hose Clamp
8 . Front Caliper Assembly
9 . Brake Pads
10 . Caliper Holder
11 . Piston
12 . Caliper
13 . Brake Disc

http://manuals.magnamaniacs.com

T1 : 7.8 N-m (0.80 kg m, 69 in-lb)
T2 : 23 N-m (2.3 kg m, 16.5 ft-lb)
T3 : 25 N-m (2.5 kg m, 18.0 ft-lb)
T4 : 32 N-m (3.3 kg m, 24 ft-lb)
T5 : 64 N-m (6.5 kg m, 47 ft-lb)
T6 : 27 N-m (2.8 kg m, 20 ft-lb)

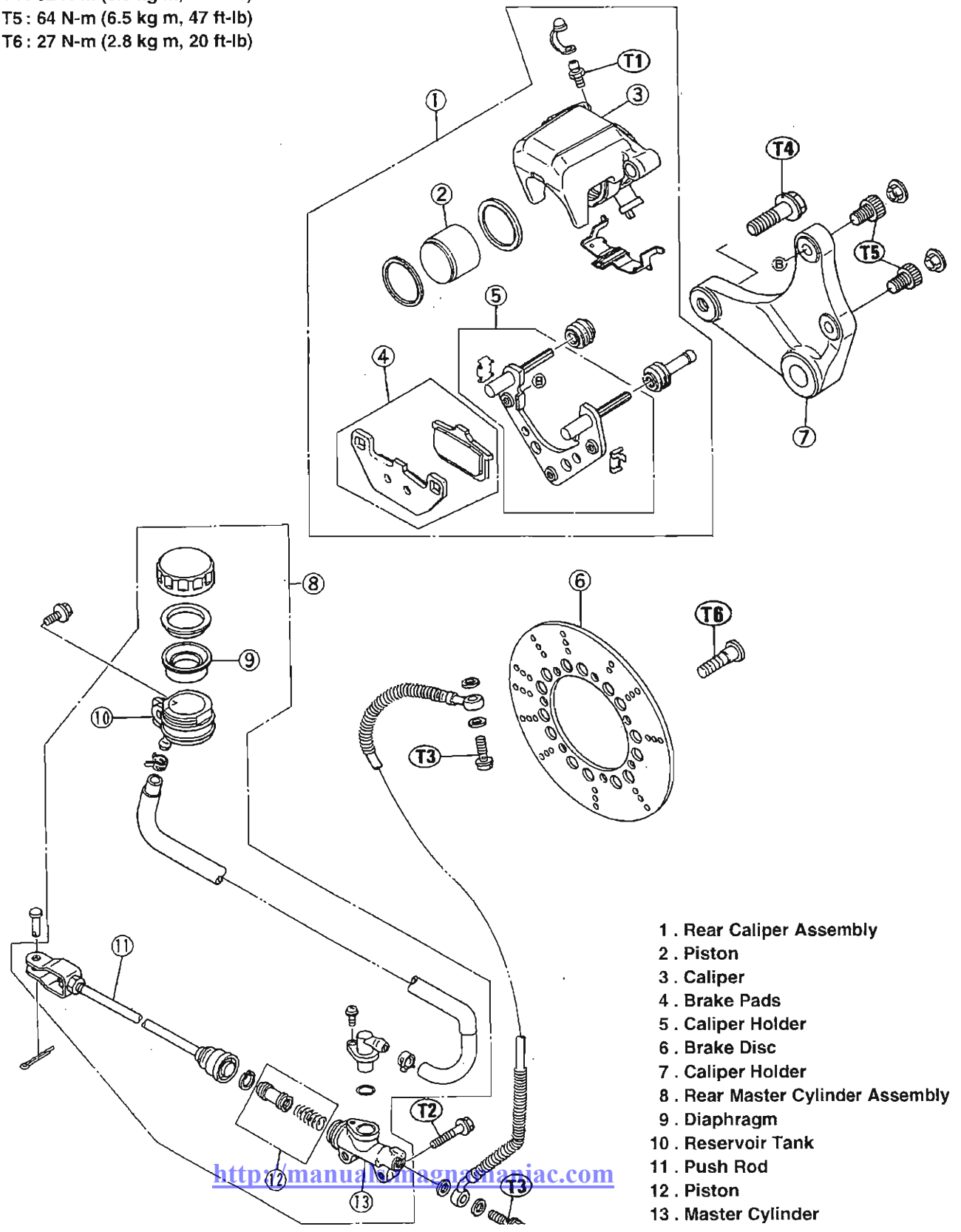

1 . Rear Caliper Assembly
2 . Piston
3 . Caliper
4 . Brake Pads
5 . Caliper Holder
6 . Brake Disc
7 . Caliper Holder
8 . Rear Master Cylinder Assembly
9 . Diaphragm
10 . Reservoir Tank
11 . Push Rod
12 . Piston
13 . Master Cylinder

http://manuals.mazdamania.com

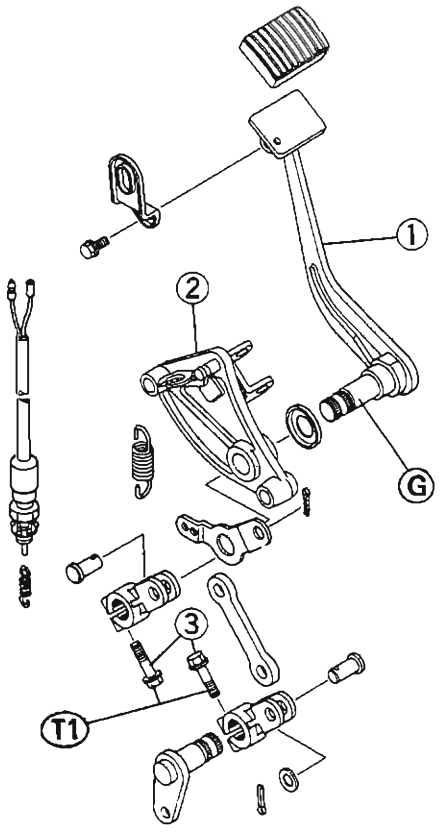

1. Rear Brake Pedal
2. Front Footpeg Bracket
3. Brake Pedal Link Clamp Bolts

G : Apply grease.

T1: 25 N-m (2.5 kg-m, 18.0 ft-lb)

Special Tool

Circlip Pliers: 57001-143

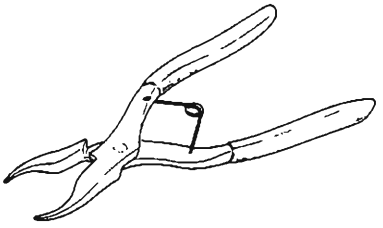

Specifications

Item	Standard	Service Limit
Brake Pedal:		
Brake pedal position	65 mm above top of footpeg	– – –
Brake Pads:		
Pad lining thickness	5.0 mm	1 mm
Brake Discs:		
Disc Thickness:		
Front VN1500-A	4.8 – 5.1 mm	4.5 mm
VN1500-B	5.8 – 6.1 mm	5.5 mm
Rear	6.8 – 7.1 mm	6.0 mm
Disc runout	Under 0.15 mm	0.3 mm
Brake Fluid:		
Grade	D.O.T.4	
Brand (recommended)	Castrol Girling-Universal	
	Castrol GT (LMA)	
	Castrol Disc Brake Fluid	
	Check Shock Premium Heavy Duty	

http://manuals.magnamaniac.com

Brake Pedal

Brake Pedal Position Adjustment

●Check that the brake pedal is in the correct position.

Pedal Position

Standard: About 65 mm above top of footpeg

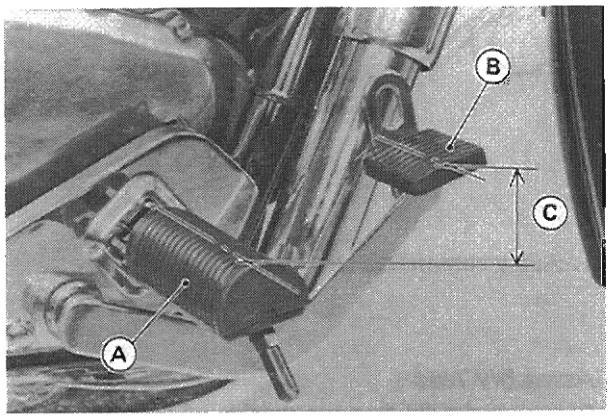

A. Footpeg
B. Brake Pedal
C. Pedal Position

★If it is not, check the punch marks at the brake pedal link pivot shaft, and the master cylinder push rod length.

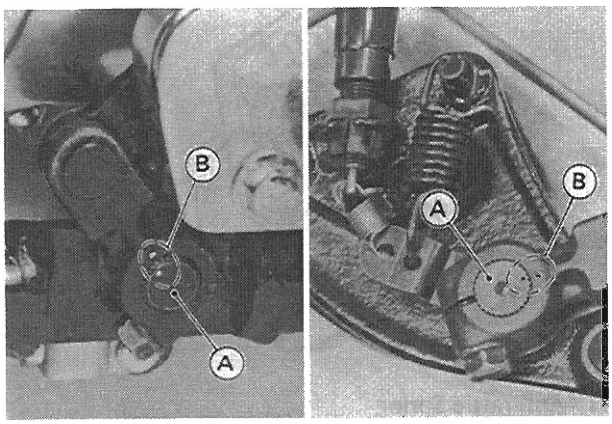

A. Pivot Shafts
B. Marks

NOTE

○*Usually it's not necessary to adjust the pedal position, but always adjust it when the master cylinder is disassembled.*

○*If the push rod length cannot be adjusted by turning the clevis, the brake pedal may be deformed or incorrectly installed.*

●When the brake pedal is in its rest position, measure the length Ⓐ indicated in the figure.

★If the length Ⓐ is not within the specified length, adjust a nut.

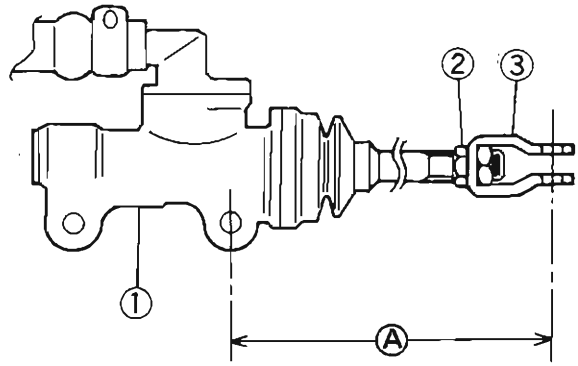

1. Master Cylinder
2. Locknut
3. Clevis

Length Ⓐ

Standard: 165 mm

Caliper

Front Caliper Removal

●Disconnect the speedometer cable lower end.

●Loosen the banjo bolt at the caliper, and tighten it lightly.

●Remove the caliper mounting bolts and take off the caliper.

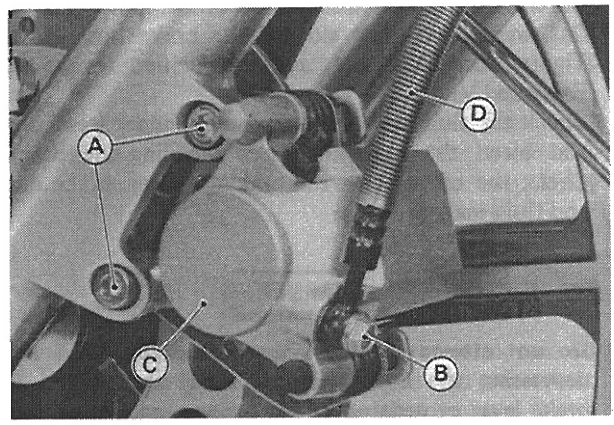

A. Caliper Mounting Bolts
B. Banjo Bolt
C. Caliper
D. Brake Hose

●Disconnect the brake hose from the caliper.

★If the caliper is to be disassembled after removal and if compressed air is not available, remove the piston using the following steps before disconnecting the brake hose from the caliper.

http://manuals.magnamaniac.com

oRemove the pads.
oPump the brake lever or pedal to remove the caliper piston.

NOTE

o*Immediately wipe up any brake fluid that spills.*

Rear Caliper Removal

●Remove the rear caliper in the same way on the front caliper.

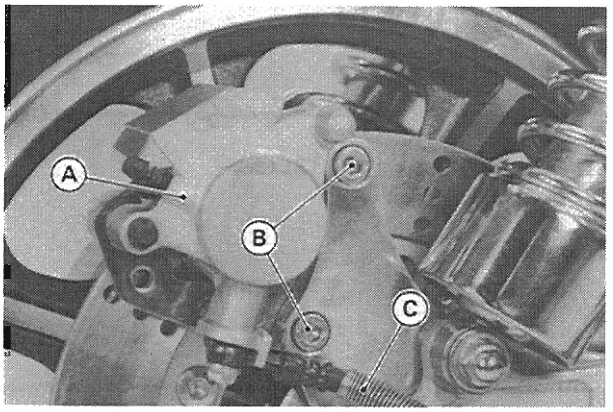

A. Caliper
B. Caliper Mounting Bolts
C. Brake Hose

Caliper Installation

●Note the following.
oTighten the caliper mounting bolts to the specified torque (see Exploded View).
oConnect the brake hose to the caliper putting a new flat washer on each side of the brake hose fitting.
oTighten the banjo bolt to the specified torque (see Exploded View).
oCheck the fluid level in the master cylinder (reservoir), and bleed the brake line (see Bleeding the Brake).
oCheck the brake for weak braking power, brake drag, and fluid leakage.

WARNING

oDo not attempt to drive the motorcycle until fully depressing the brake lever or pedal then pump the brake lever or pedal until the pads are against the disc. The brakes will not function on the first application of the lever or pedal if this is not done.

Disassembly Notes

●Using compressed air, remove the piston.
oCover the caliper opening with a clean, heavy cloth.
oRemove the piston by lightly applying compressed air to where the brake line fits into the caliper.

WARNING

oTo avoid serious injury, never place your fingers or palm inside the caliper opening. If you apply compressed air into the caliper, the piston may crush your hand or fingers.

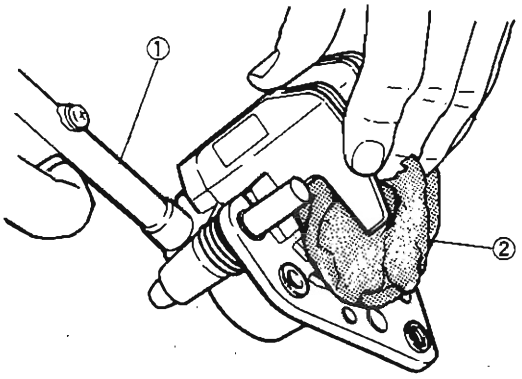

1. Apply compressed air. 2. Cloth

Assembly Notes

●Apply brake fluid to the outside of the piston and the fluid seal, and push the piston into the cylinder by hand. Take care that neither the cylinder nor the piston skirt get scratched.
●Apply a thin coat of PBC (Poly Butyl Cuprysil) grease to the caliper holder shafts and holder holes. (PBC is a special high temperature, water-resistant grease).
●Install the anti-rattle spring in the calipers as shown.

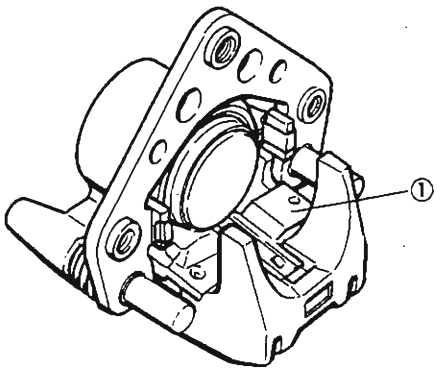

1. Anti-rattle Spring

Brake Pads

http://manuals.magnamaniac.com

Removal

●Remove the caliper (see Front or Rear Caliper Removal).

●Take off the piston side pad from the caliper holder.
●Push the caliper holder to the piston side, and then remove the pad from the caliper holder shaft.

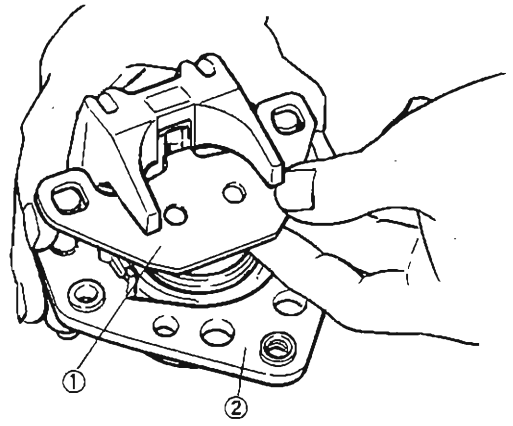

1. Pad
2. Caliper Holder
3. Push the caliper holder.

Installation Notes

●Push the caliper pistons in by hand as far as they will go.

WARNING

○**Do not attempt to drive the motorcycle until fully depressing the brake lever or pedal then pump the brake lever or pedal until the pads are against the disc. The brake will not function on the first application of the lever or pedal if this is not done.**

Lining Wear

★If the lining thickness of either pad is less than the service limit, replace both pads in the caliper as a set.

Pad Lining Thickness

Standard:	**5.0 mm**
Service Limit:	**1 mm**

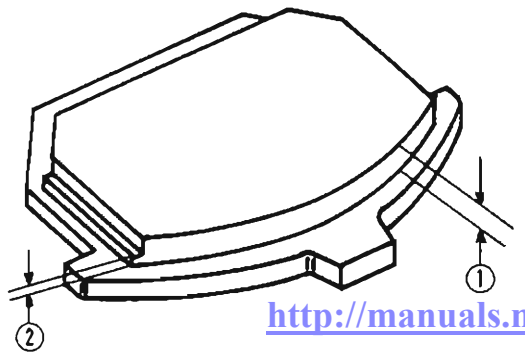

1. Lining Thickness
2. Service Limit

Master Cylinders

Front Master Cylinder Installation

●When installing the front master cylinder, note the following.
○The master cylinder clamp must be installed with the rear view mirror holder upward.
○Tighten the upper clamp bolt first, and then the lower clamp bolt to the specified torque (see Exploded View). There will be a gap at the lower part of the clamp after tightening.

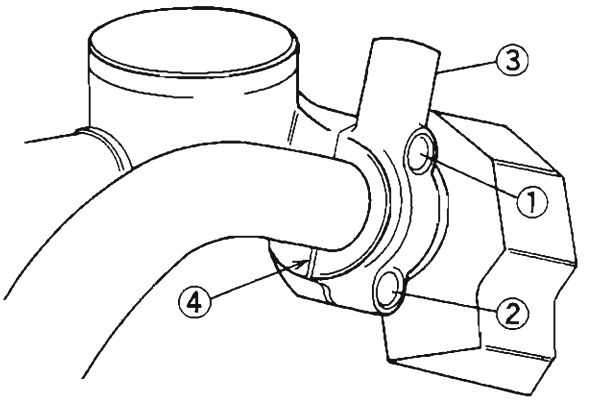

1. Tighten upper clamp bolt first.
2. Lower Clamp Bolt
3. Mirror Holder
4. Clearance

○Use a new flat washer on each side of the brake hose fitting.
○Tighten the banjo bolts to the specified torque (see Exploded View).

Rear Master Cylinder Removal

●Note the following.
○Remove the cotter pin and then pull the joint pin out of the push rod clevis and brake pedal.

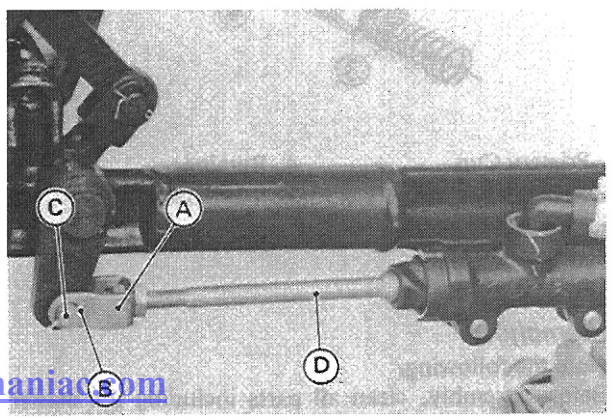

A. Clevis
B. Cotter Pin
C. Joint Pin
D. Push Rod

http://manuals.magnamania.com

Rear Master Cylinder Installation

●Note the following.

○Replace the aluminum washer on each side of the brake hose fitting with a new one. Be sure that the metal pipe is properly fitted into the U-shaped notch in the master cylinder.

○Tighten the banjo bolts to the specified torque (see Exploded View).

○Tighten the rear master cylinder mounting bolts (2) to the specified torque (see Exploded View).

Inspection and Adjustment after Installation

●Check and adjust the following items.

Brake Pedal Position
Rear Brake Light Switch Position
Brake Line Air Bleed
Brake Drag
Braking Power
Brake Fluid Leak

Disassembly

●Remove the following parts.

Dust Cover
Retainer
Piston with Secondary Cup
Primary Cup
Spring

CAUTION

○Do not remove the secondary cup from the piston since removal will damage them.

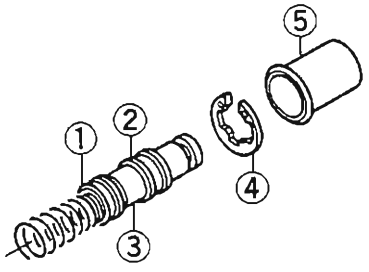

1. Primary Cup
2. Secondary Cup
3. Piston
4. Retainer
5. Dust Cover

Assembly

●Note the following.

○Before assembly, clean all parts including the master cylinder with brake fluid or alcohol.

○Apply brake fluid to the removed parts and to the inner wall of the cylinder.

CAUTION

○Except for the disc pads and disc; use only disc brake fluid, isopropyl alcohol, or ethyl alcohol, for cleaning brake parts. Do not use any other fluid for cleaning these parts. Gasoline, engine oil, or any other petroleum distillate will cause deterioration of the rubber parts. Oil spilled on any part will be difficult to wash off completely, and will eventually deteriorate the rubber used in the disc brake.

○Take care not to scratch the piston or the inner wall of the cylinder.

Inspection (Visually)

●Check that there are no scratches, wear, rust or pitting on the following parts.

Inside of the Master Cylinder
Outside of the Piston
Primary Cups
Secondary Cups
Dust Covers
Return Springs
Relief and Supply Port Plugged

★If they are damaged, replace them.

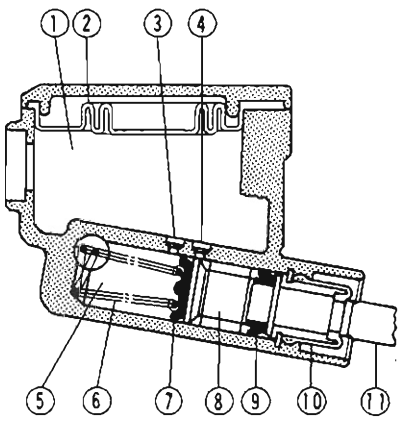

1. Reservoir
2. Diaphragm
3. Relief Port
4. Supply Port
5. Cylinder
6. Return Spring
7. Primary Cup
8. Piston
9. Secondary Cup
10. Dust Cover
11. Brake Lever

http://manuals.magnamaniac.com

Brake Disc

Wear

★Replace the disc if it has worn past the service limit.

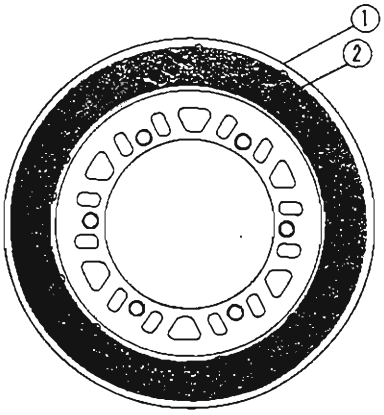

1. Brake Disc 2. Measuring Area

Front Disc Thickness

	Standard	Service Limit
VN1500-A	4.8 – 5.1 mm	4.5 mm
VN1500-B	5.8 – 6.1 mm	5.5 mm

Rear Disc Thickness

Standard: 6.8 – 7.1 mm
Service Limit: 6 mm

Warp

★If runout exceeds the service limit, replace the disc.

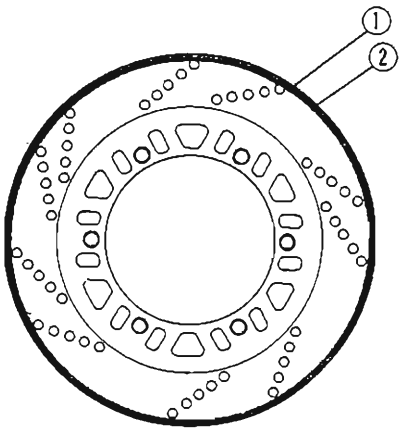

1. Brake Disc 2. Measuring Area

Disc Runout

Standard: Under 0.15 mm
Service Limit: 0.3 mm

Brake Fluid

Fluid Level Inspection

●Check the brake fluid level in the reservoir.

Front Brake Fluid Reservoir

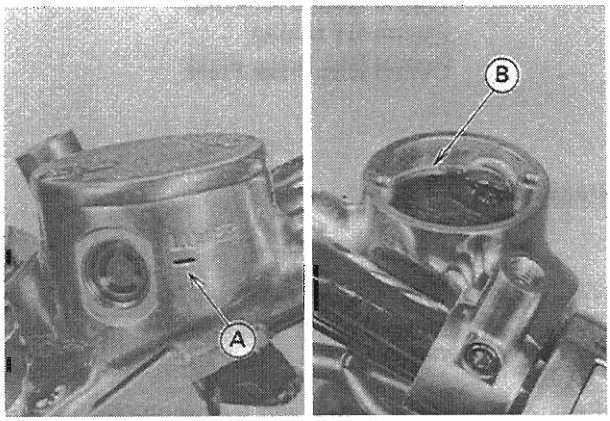

A. Lower Level Line B. Upper Level Line

Rear Brake Fluid Reservoir

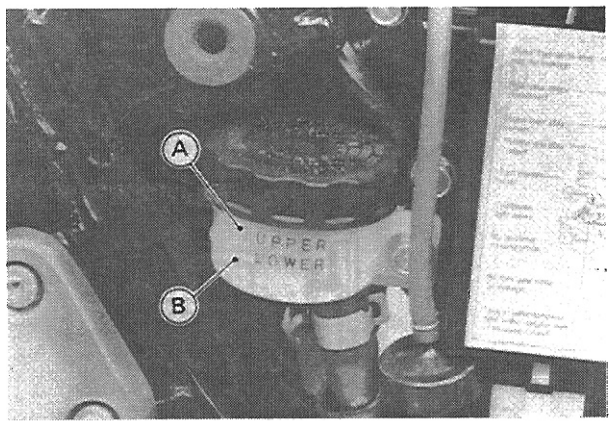

A. Upper Level Line B. Lower Level Line

NOTE

○*Hold the reservoir horizontal when checking brake fluid level.*

★If the fluid level is lower than the lower level line, fill the reservoir to the upper level line of the reservoir.

WARNING

○Change the brake fluid in the brake line completely if the brake fluid must be refilled but the type and brand of the brake fluid that already is in the reservoir are unidentified. After changing the fluid, use only the

http://manuals.magnamaniac.com

same type and brand of fluid thereafter. Mixing different types and brands of brake fluid lowers the brake fluid boiling point and could cause the brake to be ineffective. It may also cause the rubber brake parts to deteriorate.

Recommended Disc Brake Fluid

Type	**D.O.T.4**
Brand	**Check Shock Premium Heavy Duty**
	Castrol Girling-Universal
	Castrol GT (LMA)
	Castrol Disc Brake Fluid

Brake Fluid Change

NOTE

○*The procedure to change the front brake fluid is as follows. Changing the rear brake fluid is the same as for the front brake.*

●Remove the reservoir cap, and remove the rubber cap on the bleed valve.
●Attach a clear plastic hose to the bleed valve on the caliper, and run the other end of the hose into a container.
●Change the brake fluid as follows:

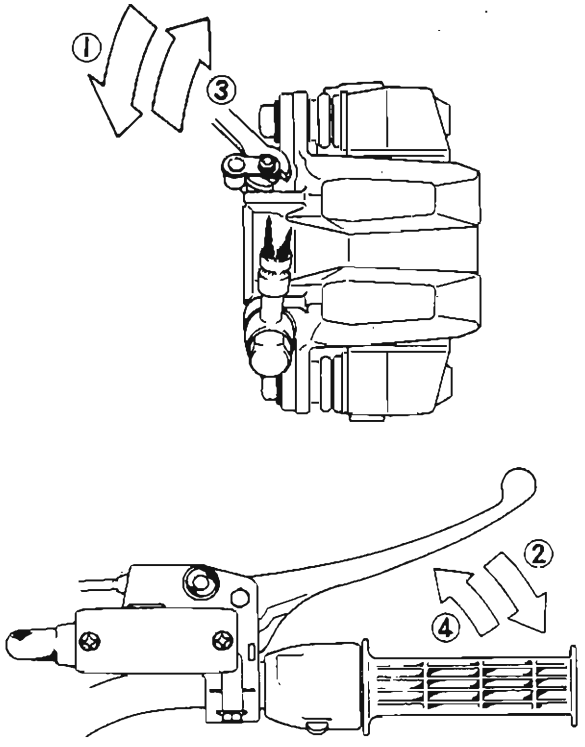

1. Open the bleed Valve.
2. Pump the brake lever and hold it.
3. Close the bleed valve.
4. Release the brake lever.

○Check the fluid level in the reservoir often, replenishing it as necessary.

NOTE

○*If the fluid in the reservoir runs completely out any time during fluid changing, the bleeding operation must be done over again from the beginning since air will have entered the line.*

○Repeat this operation until fresh brake fluid comes out from the plastic hose or the color of the fluid changes.

WARNING

○**Do not mix two brands of fluid. Change the brake fluid in the brake line completely if the brake fluid must be refilled but the type and brand of the brake fluid that is already in the reservoir are unidentified.**

Bleeding the Brake Line

NOTE

○*The procedure to bleed the front brake line is as follows. Bleeding the rear brake line is the same as for the front brake.*

Bleed the air after the brake parts are removed or disassembled.

●With the reservoir cap off, fill the reservoir with fresh brake oil.
●Slowly pump the brake lever or pedal several times until no air bubbles can be seen rising up through the fluid from the holes at the bottom of the reservoir. This bleeds the air from the master cylinder and the brake line.

NOTE

○*Tap the brake hose lightly going from the caliper to the reservoir side and let the air off from the reservoir when the brake lever has a sponge feeling.*

http://manuals.magnamaniac.com

●Attach a clear plastic hose to the bleed valve on the caliper, and run the other end of the hose into a container.
●Bleed the brake line and the caliper as follows:

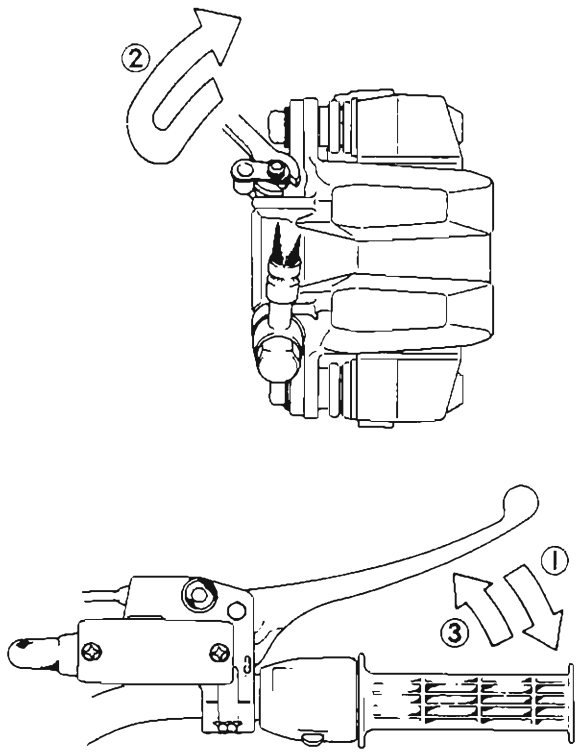

1. Pump the brake lever until it becomes hard, and apply the brake lever and hold it.
2. Quickly open and close the valve while holding the brake lever applied.
3. Release the brake lever.

○Check the fluid level in the reservoir often, replenishing it as necessary.

NOTE

○*If the fluid in the reservoir runs completely out any time during bleeding, the bleeding operation must be done over again from the beginning since air will have entered the line.*

○Repeat this operation until no more air can be seen coming out into the plastic hose.

NOTE

○*If the brake lever action still feels soft or spongy, tap the brake hose lightly from bottom to top end or air will rise up to the top part of the hose, slowly pump the brake lever as the same manner as above.*

http://manuals.magnamaniac.com

WARNING

○**When working with the disc brake, observe the precautions listed below.**

1. Never reuse old brake fluid.
2. Do not use fluid from a container that has been left unsealed or that has been open for a long time.
3. Do not mix two types and brands of fluid for use in the brake. This lowers the brake fluid boiling point and could cause the brake to be ineffective. It may also cause the rubber brake parts to deteriorate.
4. Don't leave the reservoir cap off for any length of time to avoid moisture contamination of the fluid.
5. Don't change the fluid in the rain or when a strong wind is blowing.
6. Except for the disc pads and disc, use only disc brake fluid, isopropyl alcohol, or ethyl alcohol for cleaning brake parts. Do not use any other fluid for cleaning these parts. Gasoline, engine oil, or any other petroleum distillate will cause deterioration of the rubber parts. Oil spilled on any part will be difficult to wash off completely and will eventually deteriorate the rubber used in the disc brake.
7. When handling the disc pads or disc, be careful that no disc brake fluid or any oil gets on them. Clean off any fluid or oil that inadvertently gets on the pads or disc with a high flash-point solvent. Do not use one which will leave an oily residue. Replace the pads with new ones if they cannot be cleaned satisfactorily.
8. Brake fluid quickly ruins painted surfaces; any spilled fluid should be completely washed away immediately.
9. If any of the brake line fittings or the bleed valve is opened at any time, the **AIR MUST BE BLED FROM THE BRAKE.**

Suspension

Table of Contents

Exploded View 12-2
Specifications 12-4
Special Tools 12-4
Front Fork 12-5
- Fork Oil Change 12-5
- Removal (each fork leg) 12-6
- Installation (each fork leg) 12-6
- Disassembly 12-6
- Assembly 12-7
- Inner Tube Inspection 12-8
- Guide Bush Inspection 12-8
- Oil Seal and Dust Seal Inspection 12-8
- Spring Tension 12-8

Rear Shock Absorber 12-9
- Adjustment 12-9
- Removal 12-9
- Installation Notes 12-9
- Rear Shock Absorber Wear 12-9
- Bushing Wear 12-10

Swing Arm 12-10
- Removal 12-10
- Installation 12-10
- Grease Seal and Needle Bearing Removal/Assembly 12-10
- Grease Seal and Needle Bearing Lubrication 12-11
- Sleeve and Needle Bearing Wear 12-11

http://manuals.magnamaniac.com

Exploded View

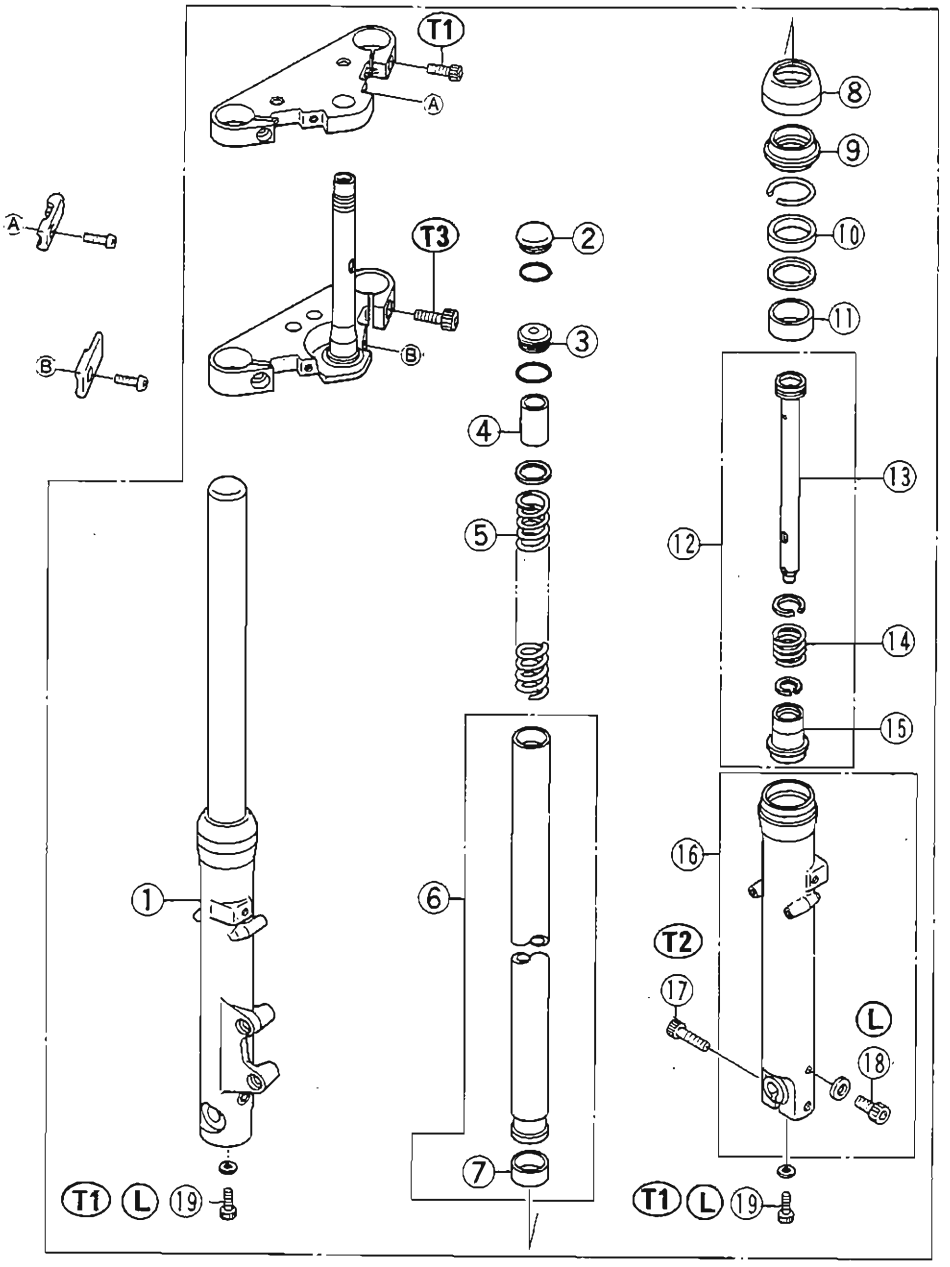

1. Front Fork Leg
2. Cap
3. Top Plug
4. Spacer
5. Fork Spring
6. Inner Tube
7. Guide Bush
8. Dust Seal Cap
9. Dust Seal
10. Oil Seal
11. Guide Bush
12. Cylinder Piston Unit
13. Cylinder
14. Shoft Spring
15. Cylinder Base
16. Outer Tube
17. Axle Clamp Bolt
18. Drain Bolt
19. Bottom Allen Bolt

L : Apply non-permanent locking agent.
T1: 20 N-m (2.0 kg-m, 14.5 ft-lb)
T2: 29 N-m (3.0 kg-m, 22 ft-lb)
T3: 52 N-m (5.3 kg-m 38 ft-lb)

http://manuals.kawasagnamaniac.com

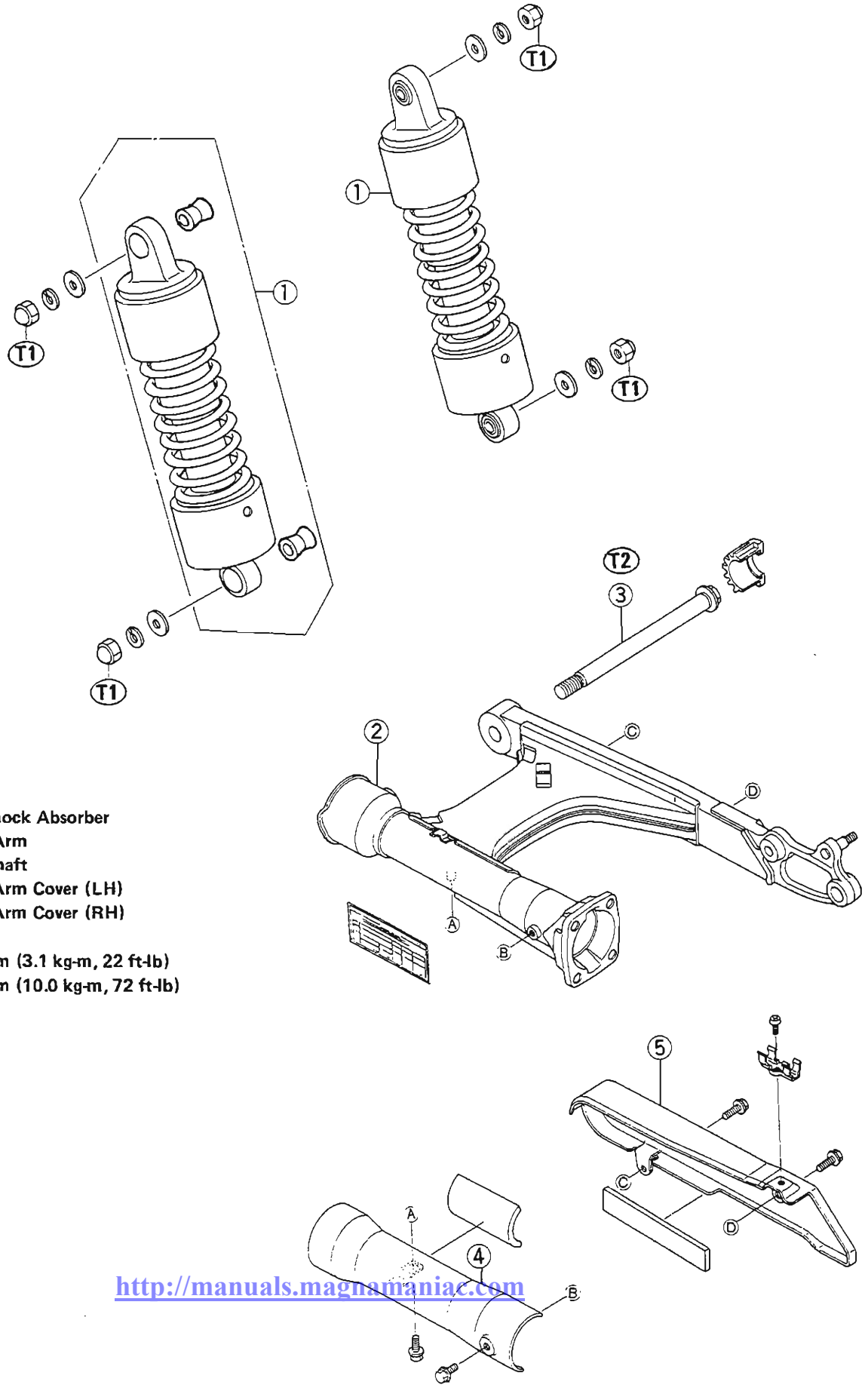

1. Rear Shock Absorber
2. Swing Arm
3. Pivot Shaft
4. Swing Arm Cover (LH)
5. Swing Arm Cover (RH)

T1: 30 N-m (3.1 kg-m, 22 ft-lb)
T2: 98 N-m (10.0 kg-m, 72 ft-lb)

http://manuals.magnamaniac.com

Specifications

Item		Standard		Service Limit
Front Fork:		VN1500-A	VN1500-B	
Fork oil:	Viscosity	SAE 10W20	←	– – –
	Amount/Unit	436 ±2.5 mL	474 ±2.5 mL	– – –
	When changing oil	370 mL	405 mL	– – –
Fork oil level (Fully compressed)		124 ±7 mm	140 ±7 mm	– – –
Fork spring free length		475.5 mm	– – –	466 mm
		– – –	412.5 mm	404 mm
Rear Suspension:				
Rear shock absorber spring adjuster position		2 of 5 positions		

Special Tools

Front Fork Cylinder Holder Handle: 57001-183
Handle Adapter: 57001-1057

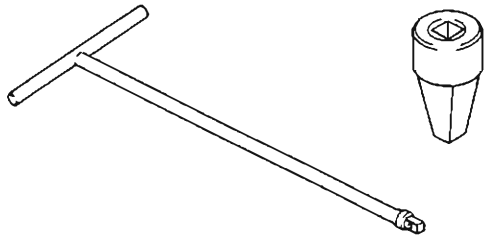

Bearing Driver Set: 57001-1129



Oil Seal and Bearing Remover: 57001-1058

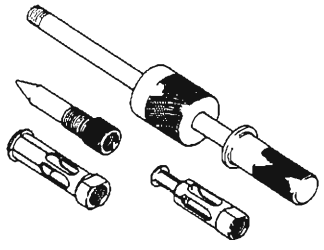

Fork Oil Seal Driver: 57001-1219

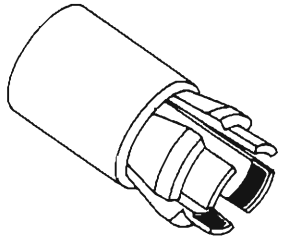

Jack Stand: 57001-1238
Attachment: 57001-1252

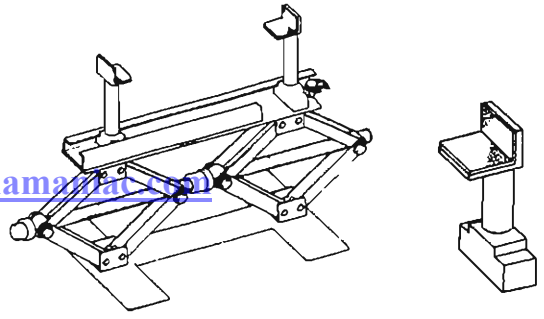

Front Outer Tube Weight: 57001-1218

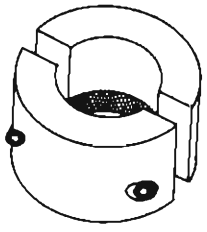

http://manuals.magnamanuals.com/

Front Fork

Fork Oil Change (each fork leg)

●Remove the following.
Handlebar (Slide to each side)
Cap and Fork Top Plug

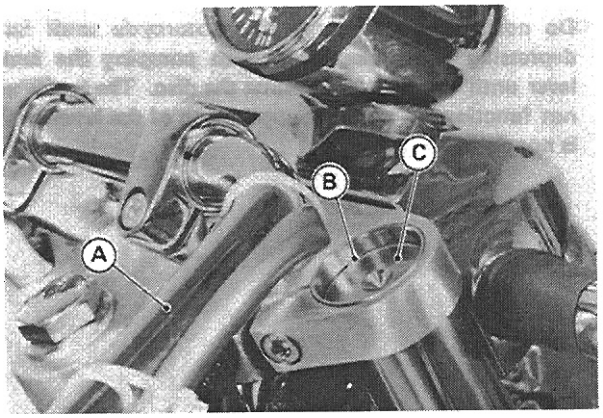

A. Handlebar
B. Retainer
C. Top Plug

Fork Spring
Drain Screw

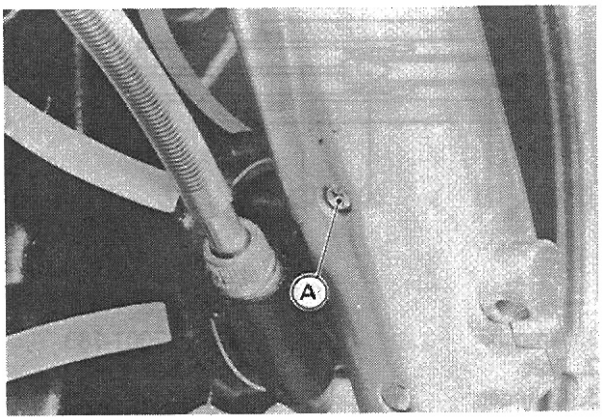

A. Drain Screw

●Allow the oil to drain into a suitable container. If you pump the fork legs to force out the oil, be sure to catch the oil in a container as it squirts out.

NOTE

○*Apply non-permanent locking agent to the threads of the drain screw and gasket.*

Front Fork Oil

Viscosity	**SAE 10W20**
Amount per side	
When changing oil:	
VN1500-A	**About 370 mL**
VN1500-B	**About 405 mL**
After disassembly and completely dry:	
VN1500-A	**436 ±2.5 mL**
VN1500-B	**474 ±2.5 mL**

NOTE

○*Pump the fork enough times to expel the air form the upper and lower chambers.*

●With the fork fully compressed insert a tape measure or rod in the inner tube, and measure the distance from the top of the inner tube to the oil.

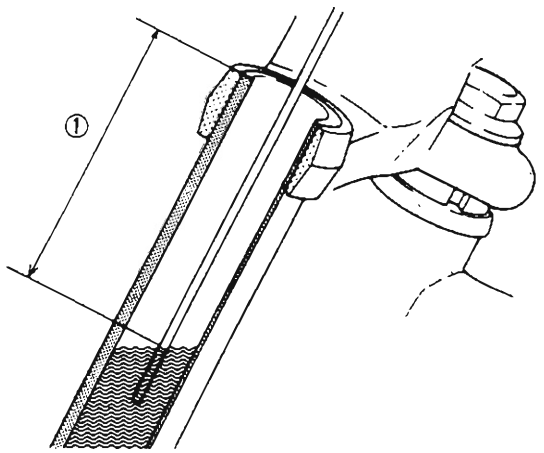

1. Oil Level

Fork Oil Level (Fully Compressed)

VN1500-A	**124 ±7 mm**
VN1500-B	**140 ±7 mm**

http://manuals.magnamaniac.com

★If the oil is above or below the specified level, remove or add oil and recheck the oil level.

●Change the oil of the other fork leg in the same manner.

Removal (each fork leg)

●Using the jack stand and the attachment (special tools: 57001-1238 or 1252) or other suitable means to lift the front of the motorcycle.
●Remove the following.
Caliper (from the fork leg to be removed.)
Front Wheel (see Wheels/Tires chapter)
Front Fender
●Loosen the upper and lower fork clamp bolts.
●With a twisting motion, work the fork leg down and out.

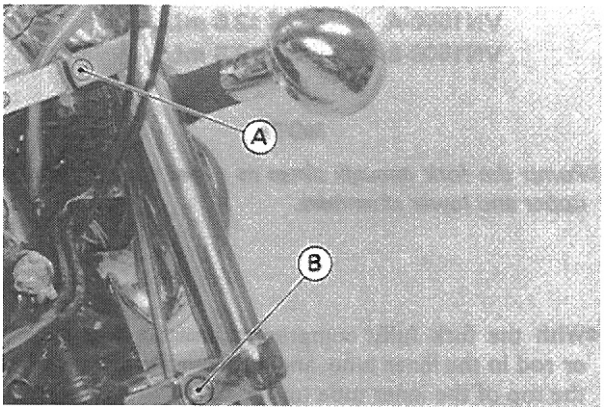

A. Upper Clamp Bolt B. Lower Clamp Bolt

Installation (each fork leg)

●Perform the following.
○Install the removed parts.
○If the fork leg was disassembled, check the fork oil level.
○Install the fork tube so that the inner tube top end is aligned with the upper surface of the stem head.

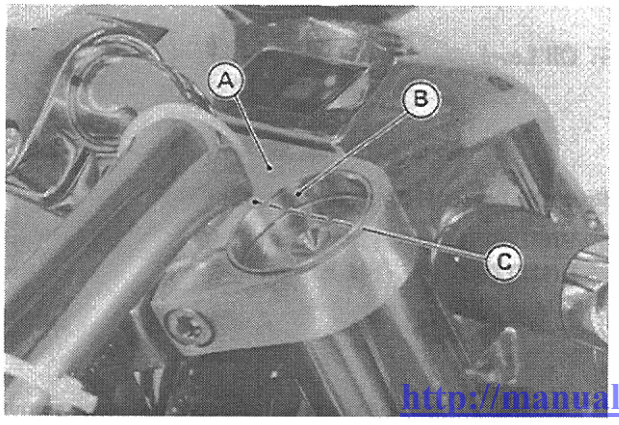

A. Stem Head C. Aligned
B. Inner Tube

○Tighten the upper and lower fork clamp bolts to the specified torque (see Exploded View).
○Tighten the caliper mounting bolts to the specified torque (see Exploded View in Brake chapter).
○Check the front brake after Installation.

WARNING

○Do not attempt to drive the motorcycle until fully depressing the brake lever, then pumping the brake lever until the pads are against the disc. The brake will not function on the first application of the lever if this is not done.

Disassembly

●Perform the following.
○Remove the retainer and take off the top plug.
○Pull out the spacer, washer, and the fork spring.
○Remove the fork leg.
○Pour out the fork oil.
○Stop the cylinder from turning by using the front fork cylinder holder handle and adapter (special tools). Unscrew the Allen bolt and take the bolt, and gasket out of the bottom of the outer tube.

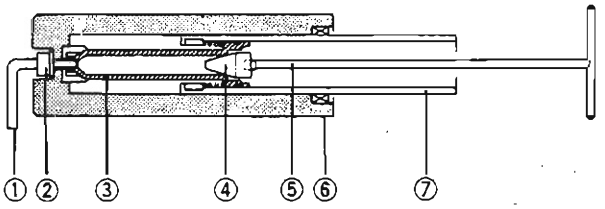

1. Wrench
2. Bolt
3. Cylinder
4. Adapter: 57001-1057
5. Handle: 57001-183
6. Outer Tube
7. Inner Tube

http://manuals.magnamaniac.com

○Remove the piston and cylinder unit and the short spring from the top of the front fork tube.
○Pry the dust seal cover out of the fork tube.

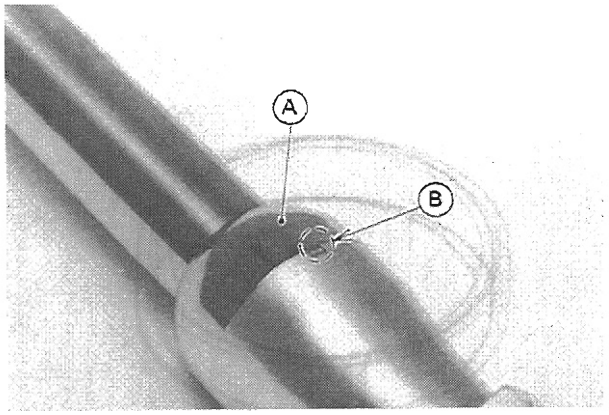

A. Dust Seal Cover B. Pry Point

○Remove the dust seal and the retainer from the outer tube.

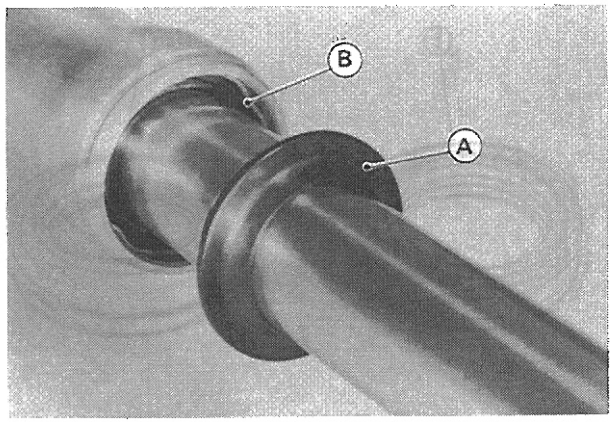

A. Dust Seal B. Retainer

○Mount the weight (special tool) on the top of the outer tube, by fitting the step of the weight (special tool) to the top corner of the outer tube.
○Holding the inner tube by hand in a vertical position, stroke the outer tube several times and pull it down.

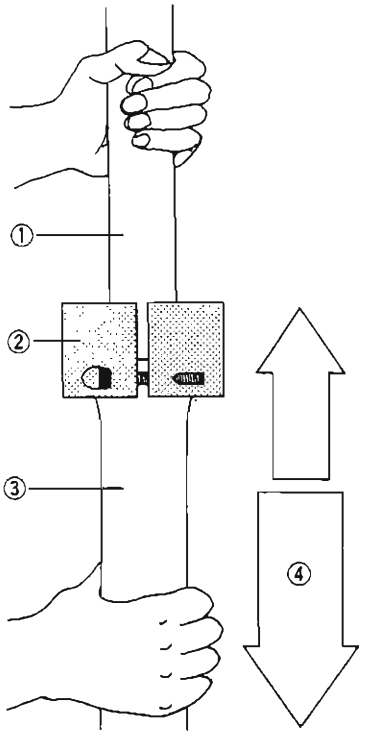

1. Inner Tube
2. Fork Outer Tube Weight: 57001-1218
3. Outer Tube
4. Stroke

○Take the cylinder base off the outer tube.
○Take the fork inner parts out of the inner tube.

Assembly

●Assembly is the reverse of disassembly. Note the following.
○Check the top plug O-rings for damage.
☆Replace them with new ones if damaged.
○Replace the oil seal removed with a new one.
○Inspect the guide bush (see Guide Bush Inspection).
☆Replace it with new ones if necessary.
○Apply a non-permanent locking agent to the Allen bolt.
○Tighten the Allen bolt to the specified torque (see Exploded View), using the front fork cylinder holder handle and holder adapter (special tools) to stop the cylinder from turning.
○Install the guide bush with a used guide bush on it by tapping the used guide bush with the fork oil seal driver (special tool) until it stops. The slit of the bush must be faced toward the left or right.

http://manuals.magnamaniac.com

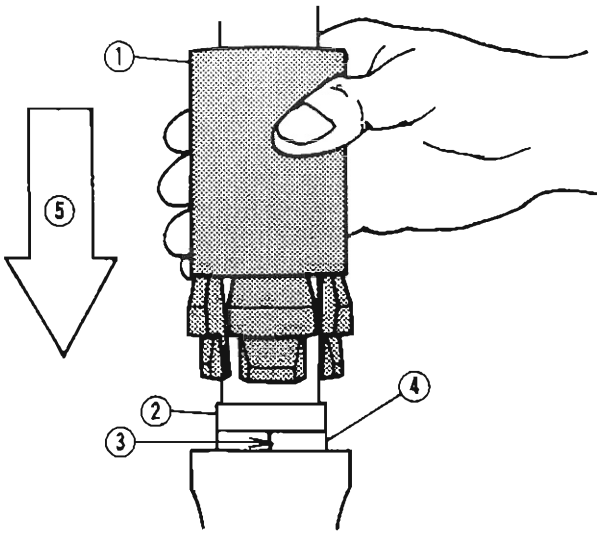

1. Driver: 57001-1219
2. Used Guide Bush
3. Slit (toward the left or right)
4. New Guide Bush
5. Tap

○Use the fork oil seal driver (special tool) to install the oil seal in the front fork.
○Install the dust seal cover with a oil seal driver (special tool).

Inner Tube Inspection

★If the inner tube is damaged, replace it.
●Nicks or rust damage can sometimes be repaired by using a wet-stone to remove sharp edges or raised areas which cause seal damage.
★If the damage is not repairable, replace the inner tube. Since damage to the inner tube damages the oil seal, replace the oil seal whenever the inner tube is repaired or replaced.

CAUTION

○**If the inner tube is badly bent or creased, replace it. Excessive bending, followed by subsequent straightening, can weaken the inner tube.**

Guide Bush Inspection

★Replace the guide bushes if they are damaged or worn.

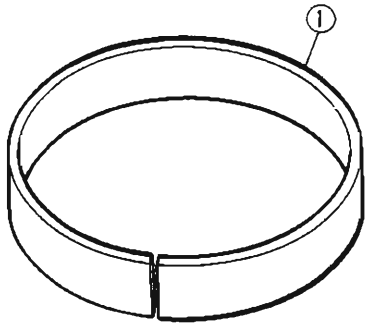

1. Guide Bush

Oil Seal and Dust Seal Inspection

★If dust seal has any damage or wear, replace it.
●Replace the oil seal with a new one whenever it has been removed.

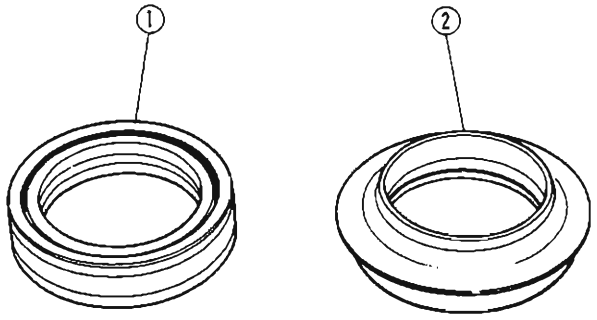

1. Oil Seal 2. Dust Seal

Spring Tension

★If the spring of either fork leg is shorter than the service limit, it must be replaced. If the length of a replacement spring and that of the remaining spring vary greatly, the remaining spring should also be replaced in order to keep the fork legs balanced for motorcycle stability.

http://manuals.magnamanual.com

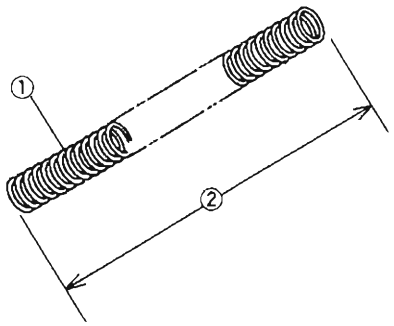

1. Fork Spring
2. Free Length

Fork Spring Length

VN1500-A

Standard:	**475.5 mm**
Service Limit:	**466 mm**

VN1500-B

Standard:	**412.5 mm**
Service Limit:	**404 mm**

Rear Shock Absorber

Adjustment

The rear shock absorber has 5 positions so that the spring can be adjusted for different road and loading conditions.

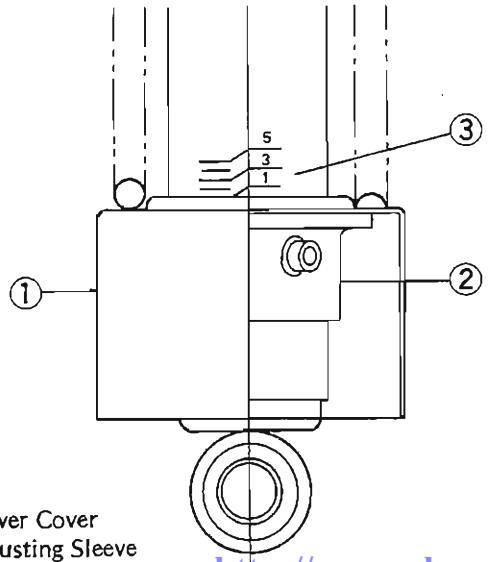

1. Lower Cover
2. Adjusting Sleeve
3. Positioning Marks

http://manuals.magnamanuals.com

If the spring action feels too soft or too stiff, adjust it in accordance with the following table.

Spring Adjuster

Position	Spring Force	Setting	Load	Road	Speed
1		Soft	Light	Good	Low
2		↑	↑	↑	↑
3		↓	↓	↓	↓
4		↓	↓	↓	↓
5	Stronger	Hard	Heavy	Bad	High

●Check to see that both adjusting sleeves are turned to the same relative position.

WARNING

○**If both spring adjusting sleeves are not adjusted equally, handling may be impaired and a hazardous condition may result.**

NOTE

○*Be sure to turn back the adjusting sleeve counterclockwise from position 5 when softening the spring action.*

Removal

●Using the jack stand and the attachment (special tools: 57001-1238 or 1252) or other suitable means to lift the rear of the motorcycle.
●Remove the cap nut, lockwasher, and flat washer from the both ends of the rear shock absorber.
●Pull the rear shock absorber off the frame.

Installation Notes

●Tighten the mounting nuts to the specified torque (see Exploded View).
●Adjust the rear shock absorber position.

Rear Shock Absorber Wear

●Remove the rear shock absorbers.
●Visually inspect the following items.
Compression Stroke
Oil Leakage
Other Damage
★If there is any damage to the rear shock absorber, or one unit feels weaker than the other, replace both shock absorbers as a set.

Bushing Wear

•Visually inspect the rubber bushing.

★If they show any signs of damage, replace them.

Swing Arm

Removal

•Using the jack stand and the attachment (special tools: 57001-1238 or 1252) or other suitable means to lift the rear of the motorcycle.

•Remove the following.

Rear Wheel (see Wheels/Tires chapter)
Rear Caliper (see Brake chapter)
Muffler (see Engine Top End chapter)
Swing Arm Covers
RH Rear Shock Absorber
Final Gear Case (see Final Drive chapter)

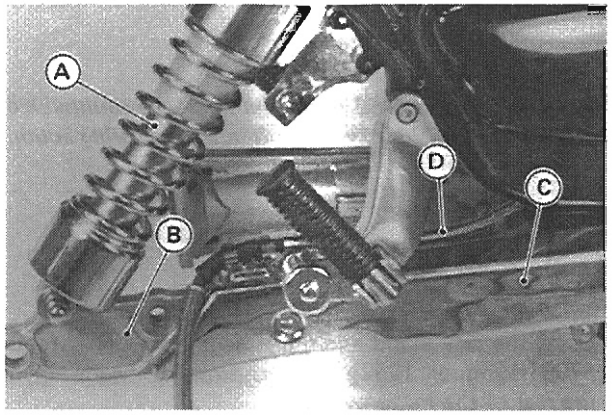

A. RH Rear Shock Absorber
B. Swing Arm
C. Cover
D. Brake Hose (take the hose out of the holder)

•Unscrew the pivot shaft and pull it out.

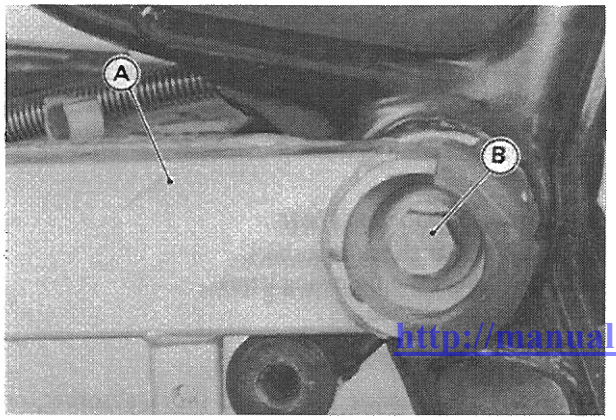

A. Swing Arm B. Pivot Shaft

•Pull back the swing arm and take if off. A cap on each side of the swing arm will also drop off.

Installation

•Installation is the reverse of removal. Note the following.

○Tighten the pivot shaft to the specified torque (see Exploded View).

○Tighten the rear shock absorber nuts to the specified torque (see Exploded View).

○Tighten the caliper mounting bolts to the specified torque (see Exploded View).

○Move the swing arm up and down to check for abnormal friction.

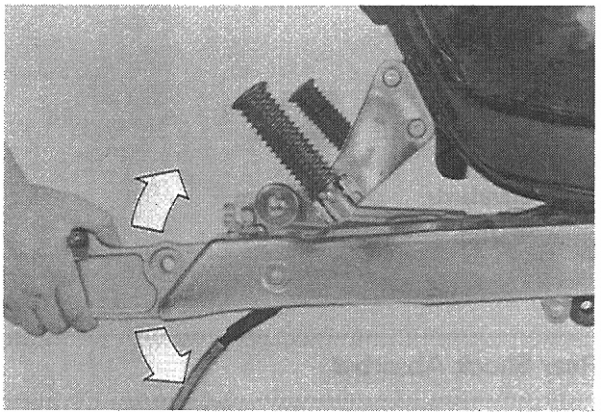

Grease Seal and Needle Bearing Removal/Assembly

•Note the following.

○Remove the needle bearing using a oil seal and bearing remover (special tool).

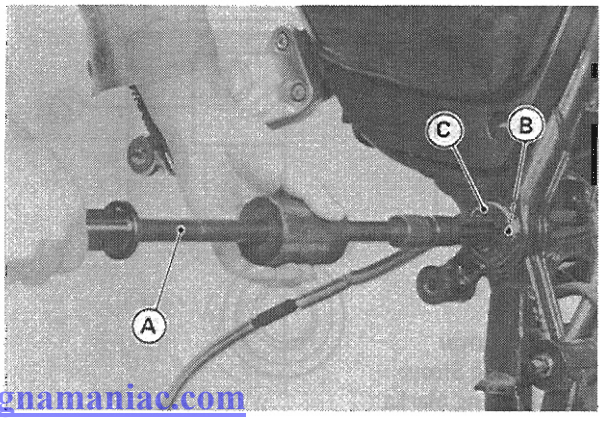

A. Oil Seal and Bearing Remover: 57001-1058
B. Needle Bearing
C. Grease Seal

http://manuals.magnamaniac.com

oInsert the needle bearing using bearing driver set (special tool: 57001-1129) so that marked side faces outside.

Grease Seal and Needle Bearing Lubrication

- Apply grease to the inner surfaces of the needle bearings in accordance with the Periodic Maintenance Chart.
- Apply a thin coat of grease to the lips of the grease seals.

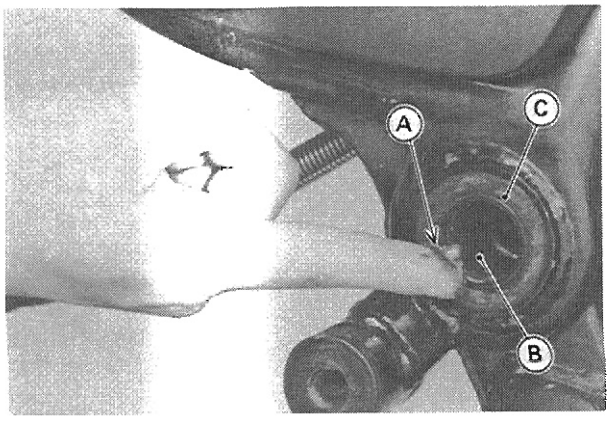

A. Apply grease.
B. Needle Bearing
C. Grease Seal

Sleeve and Needle Bearing Wear

- Visually inspect the swingarm sleeve and needle bearing.

★If there is any damage to them, replace them as a set.

http://manuals.magnamaniac.com

Steering

Table of Contents

Exploded View 13-2
Special Tools 13-3
Steering 13-4
    Adjustment 13-4
Steering Stem 13-4
    Removal 13-4
    Installation 13-6
Steering Stem Bearing 13-7
    Bearing Lubrication 13-7
    Bearing Wear, Damage 13-7
    Stem Cap Deterioration, Damage 13-7
    Steering Stem Warp 13-7

13

http://manuals.magnamaniac.com

Exploded View

T1 : 20 N-m (2.0 kg-m, 14.5 ft-lb)
T2 : 39 N-m (4.0 kg-m, 29 ft-lb)
T3 : 52 N-m (5.3 kg-m, 38 ft-lb)
T4 : 59 N-m (6.0 kg-m, 43 ft-lb)
G : Apply grease
L : Apply non-permanent locking agent.

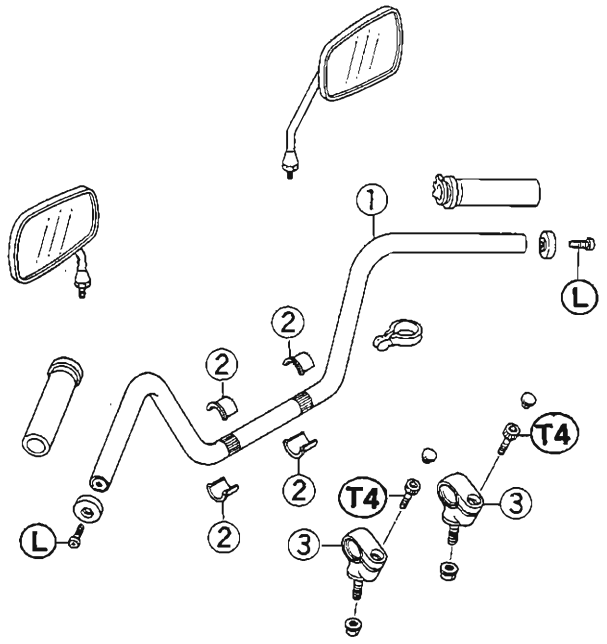

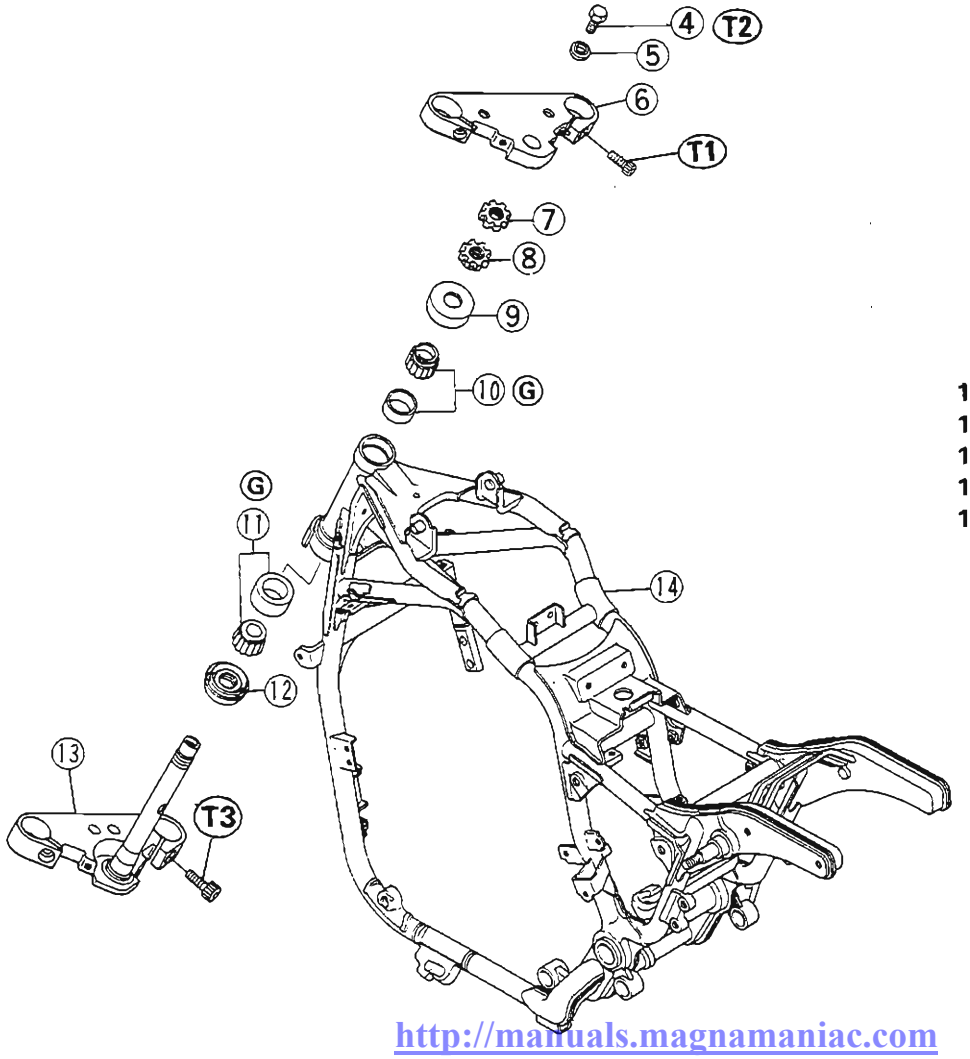

1. Handlebar
2. Collar
3. Handle Holder
4. Stem Head Bolt
5. Washer
6. Steering Stem Head
7. Stem Nut T : 6 mm
8. Stem Nut T : 10 mm
9. Stem Cap
10. Roller Bearing (Upper)
11. Roller Bearing (Lower)
12. Grease Seal
13. Steering Stem Base
14. Frame

http://manuals.magnamaniac.com

Special Tools

Stem Bearing Driver: 57001-137

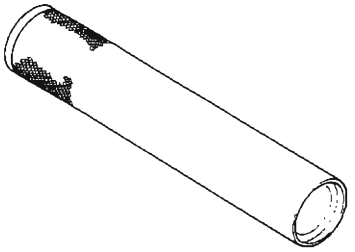

Adapter: 57001-1074



Stem Nut Wrench: 57001-1100

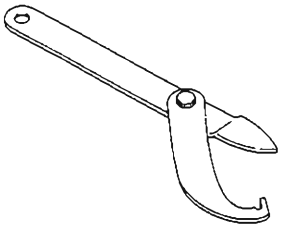

Stem Bearing Remover: 57001-1107

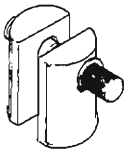

Driver Press Shaft: 57001-1075

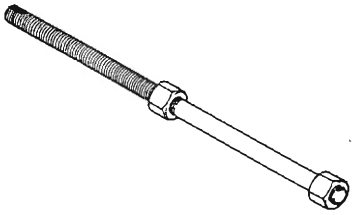

Driver (Upper): 57001-1106



Driver (Lower): 57001-1076



Jack Stand: 57001-1238

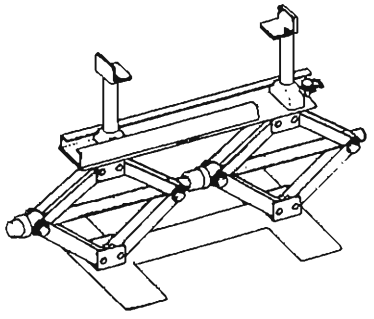

Attachment: 57001-1252

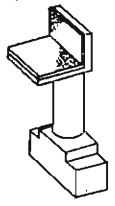

http://manuals.magnamaniac.com

Steering

Adjustment

●Check steering as follows.
○Use the jack stand and the attachment (special tools: 57001-1238, 57001-1252) to lift the front wheel off the ground.
○With the front wheel pointing straight ahead alternately tap each end of the handlebar. The front wheel should swing fully left and right from the force of gravity until the fork hits the stop.
★If the wheel binds or catches before the stop, the steering is too tight.
○Feel for steering looseness by pushing and pulling the forks.
★If you feel looseness on the forks, the steering is too loose.

NOTE

○*The cables and wiring will have some effect on the motion of the fork which must be taken into account. Be sure the wires and cables are properly routed.*
○*The bearings must be in good condition and properly lubricated in order for any test to be valid.*

★Adjust the steering if necessary.
●Remove the following parts.
Fuel Tank
Fork Lower Clamp Bolts (both sides)
Stem Head Bolt (Loosen)
●Adjust the steering with the stem nut wrench (special tool).

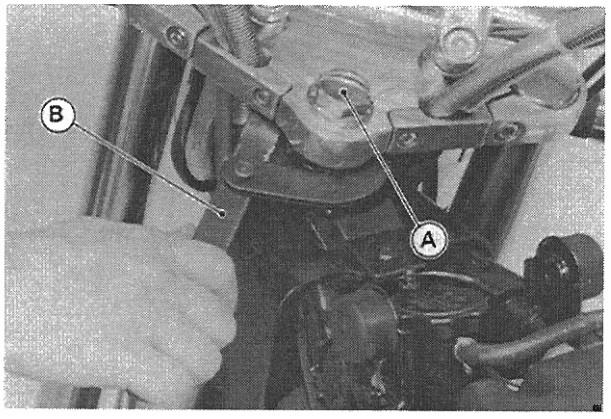

A. Stem Head Bolt
B. Stem Nut Wrench: 57001-1100

★If the steering is too tight, loosen the stem locknut a fraction of a turn.
★If the steering is loose, tighten the locknut a fraction of a turn.

NOTE

○*Turn the locknut 1/8 turn at a time maximum.*

●Tighten the steering stem head bolt to the specified torque (see Exploded View).
●Tighten the front fork lower clamp bolts to the specified torque (see Exploded View in Suspension chapter).
●Check the steering again.
★If the steering is still too tight or too loose, repeat the adjustment.
●Install the removed parts.

Steering Stem

Removal

●Remove the following.
Fuel Tank
Front Caliper
Front Wheel
Front Fender
Front Fork Legs
●Remove the clamp, free the brake hose from the left side of the stem base, and move the front brake assembly as a set to the rear.

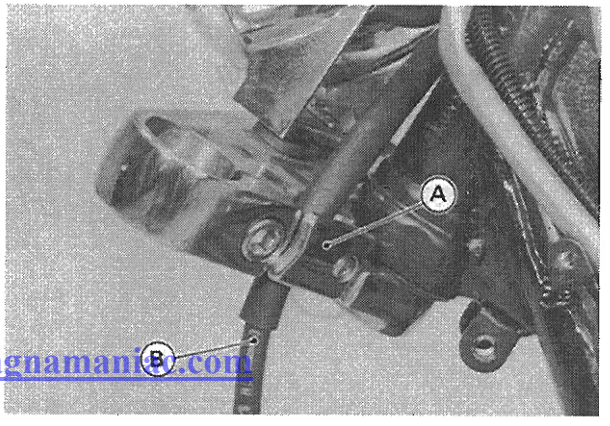

A. Clamp B. Brake Hose

http://manuals.magnamania.com

●Remove the headlight lower bolts from the bottom of the stem base.

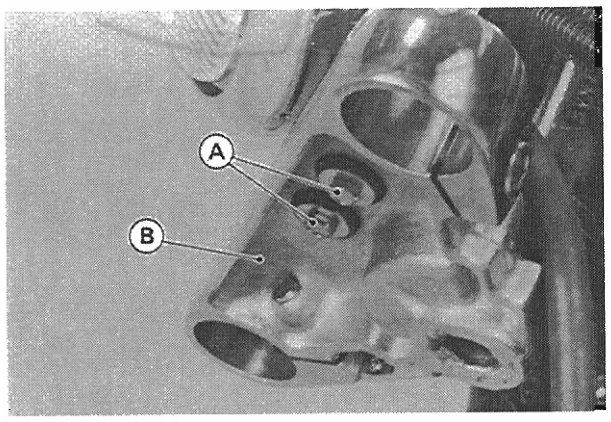

A. Headlight Lower Bolts B. Stem Base

●Remove the stem head bolt and flat washer.
●Pull up the steering stem head with the handlebar and headlight unit.

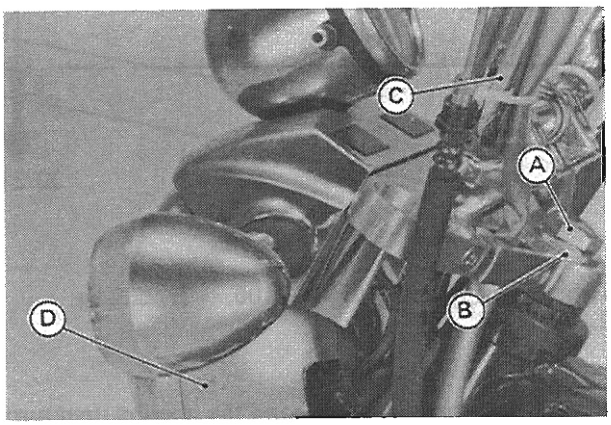

A. Stem Head Bolt
B. Washer
C. Handlebar
D. Headlight Unit

●Push up on the stem base, and remove the steering stem locknuts with the stem cap using the stem nut wrench (special tool), then remove the steering stem and stem base (single unit).

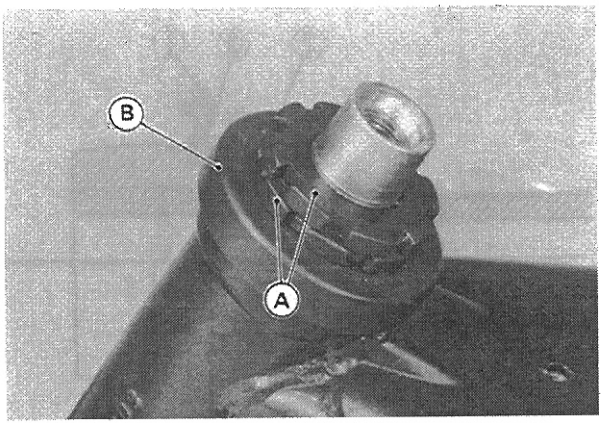

A. Locknuts B. Cap

●Remove the upper tapered roller bearing inner race.
●To remove the outer races pressed into the head pipe, install the stem bearing remover (special tool) as shown below, and hammer the stem bearing remover to drive it out.

NOTE

○*If either steering stem bearing is damaged, it is recommended that both the upper and lower bearings (including outer races) should be replaced with new ones.*

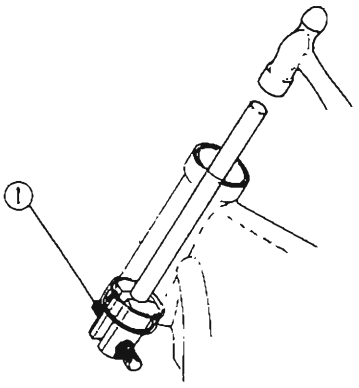

1. Stem Bearing Remover: 57001-1107

http://manuals.magnamaniac.com

●Tap the bottom of the lower inner race with a chisel.
○Pry the inner race out of the stem with a suitable metal lever.

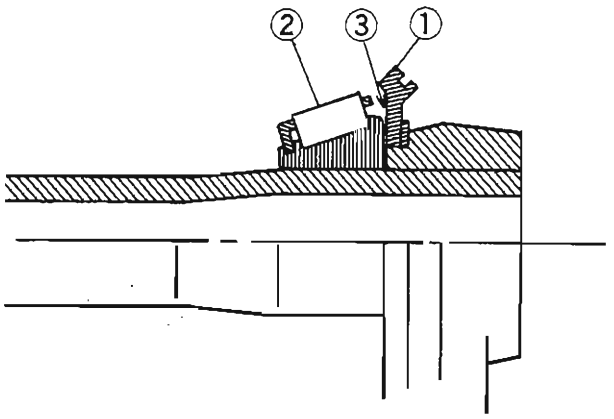

1. Grease Seal
2. Lower Inner Race
3. Tap Hear

Installation

●Installation is reverse of removal. Note the following.

○Apply grease to the outer races, and then drive them into the head pipe using the drivers and the driver press shaft (special tools).

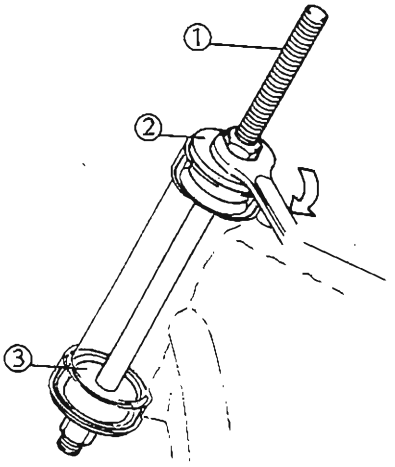

1. Driver Press Shaft: 57001-1075
2. Driver: 57001-1106
3. Driver: 57001-1076

○Apply grease to the lower tapered roller bearing, and drive it onto the steering stem using the stem bearing driver and adapter (special tools).

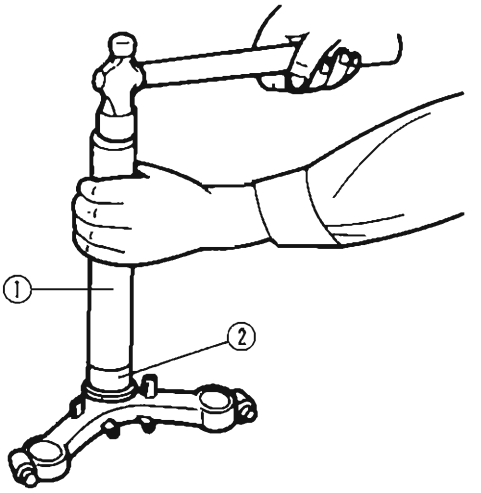

1. Stem Bearing Driver: 57001-137
2. Adapter: 57001-1074

●The following four steps should be performed after steering bearing installation. This procedure settles the bearings in place.

○Using the stem nut wrench, tighten the stem locknut to 39 N-m (4.0 kg-m, 29 ft-lb) of torque. (To tighten the steering stem locknut to the specified torque, hook the wrench on the stem locknut, and pull the wrench at the hole by 22.2 kg force in the direction shown.)

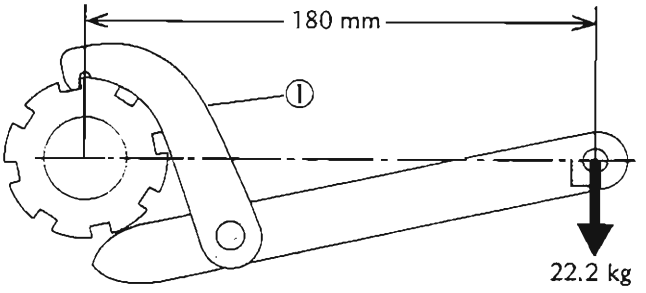

1. Stem Nut Wrench: 57001-1100
2. 180 mm
3. 22.2 kg

○Check that there is no play and the steering stem turns smoothly without rattling.

☆If not, the steering stem bearing may be damaged.

○Again back out the stem locknut a fraction of a turn until it turns lightly.

○Turn the stem locknut lightly clockwise until it just becomes hard to turn. Do not overtighten, or the steering will be too tight.

●Check and adjust the following after installation.

Steering Adjustment
Clutch Hose
Throttle Cables
Choke Cable
Front Brake

http://manuals.magnamac.com

Steering Stem Bearing

Bearing Lubrication

●Perform the following.
○Remove the steering stem.
○Using a high flash-point solvent, wash the upper and lower tapered roller bearings in the cages.
○Wipe the upper and lower outer races, which are press-fitted into the frame head pipe, clean off grease and dirt.
○Visually check the outer races and the rollers.
☆Replace the bearing assemblies if they show wear or damage.
○Pack the upper and lower tapered roller bearings in the cages with grease, and apply light coat of grease to the upper and lower outer races.
○Install the steering stem, and adjust the steering.

Bearing Wear, Damage

★Replace the bearing assemblies if they show damage.

Stem Cap Deterioration, Damage

★Replace the grease seal if necessary.

Steering Stem Warp

★If the steering stem shaft is bent, replace the steering stem.

http://manuals.magnamaniac.com

Frame

Table of Contents

Exploded View 14-2
Right Down Tube 14-5
Removal (To Access Right Engine Cover) 14-5
Rear Fender 14-5
Rear Fender Rear Section Removal 14-5
Rear Fender Front Section Removal 14-6
Footpeg 14-6
Right Footpeg Removal 14-6
Right Footpeg Installation 14-7

http://manuals.magnamaniac.com

Exploded View

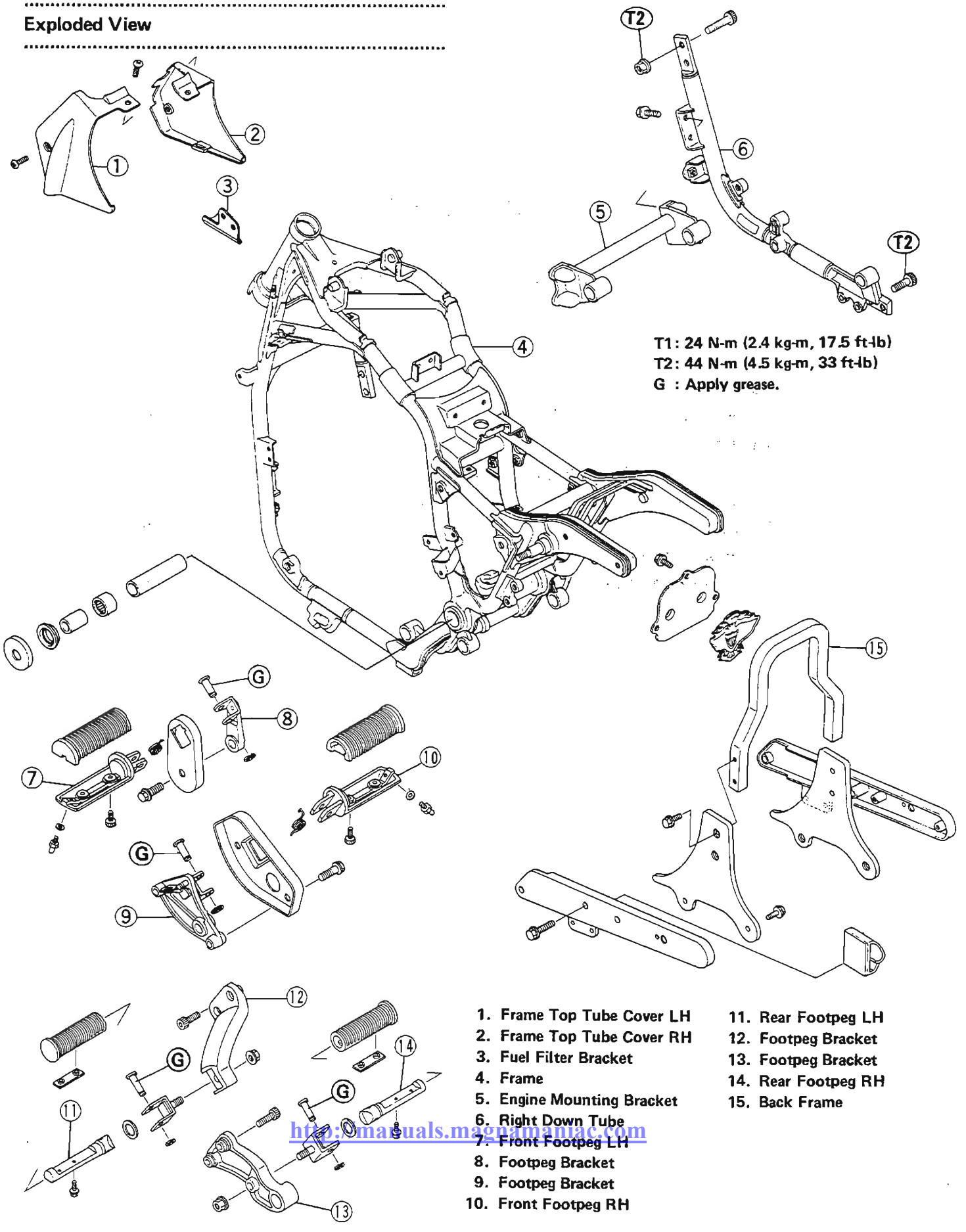

1. Frame Top Tube Cover LH
2. Frame Top Tube Cover RH
3. Fuel Filter Bracket
4. Frame
5. Engine Mounting Bracket
6. Right Down Tube
7. Front Footpeg LH
8. Footpeg Bracket
9. Footpeg Bracket
10. Front Footpeg RH
11. Rear Footpeg LH
12. Footpeg Bracket
13. Footpeg Bracket
14. Rear Footpeg RH
15. Back Frame

http://manuals.magnamaniac.com

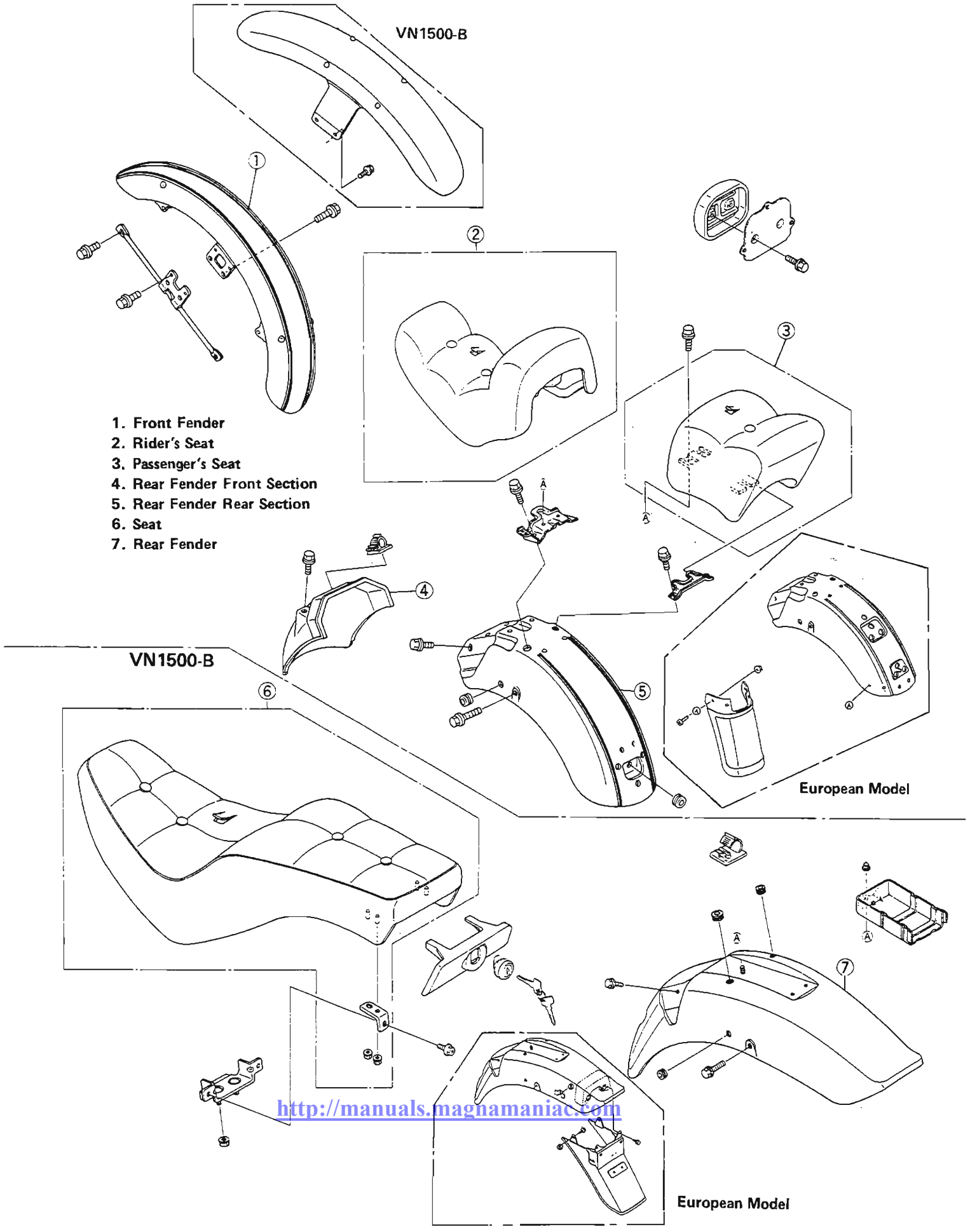

http://manuals.magnamaniac.com

1. Battery Band
2. Battery Case
3. Electric Parts Bracket
4. Fuel Pump Bracket
5. Igniter Bracket
6. Ignition Coil Bracket
7. Side Stand
8. Side Stand Switch

G : Apply grease.

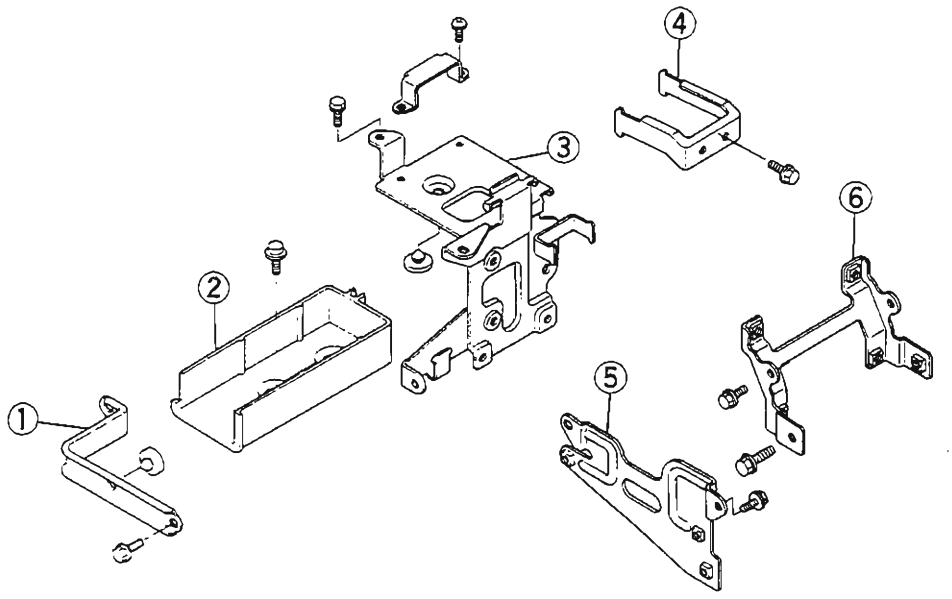

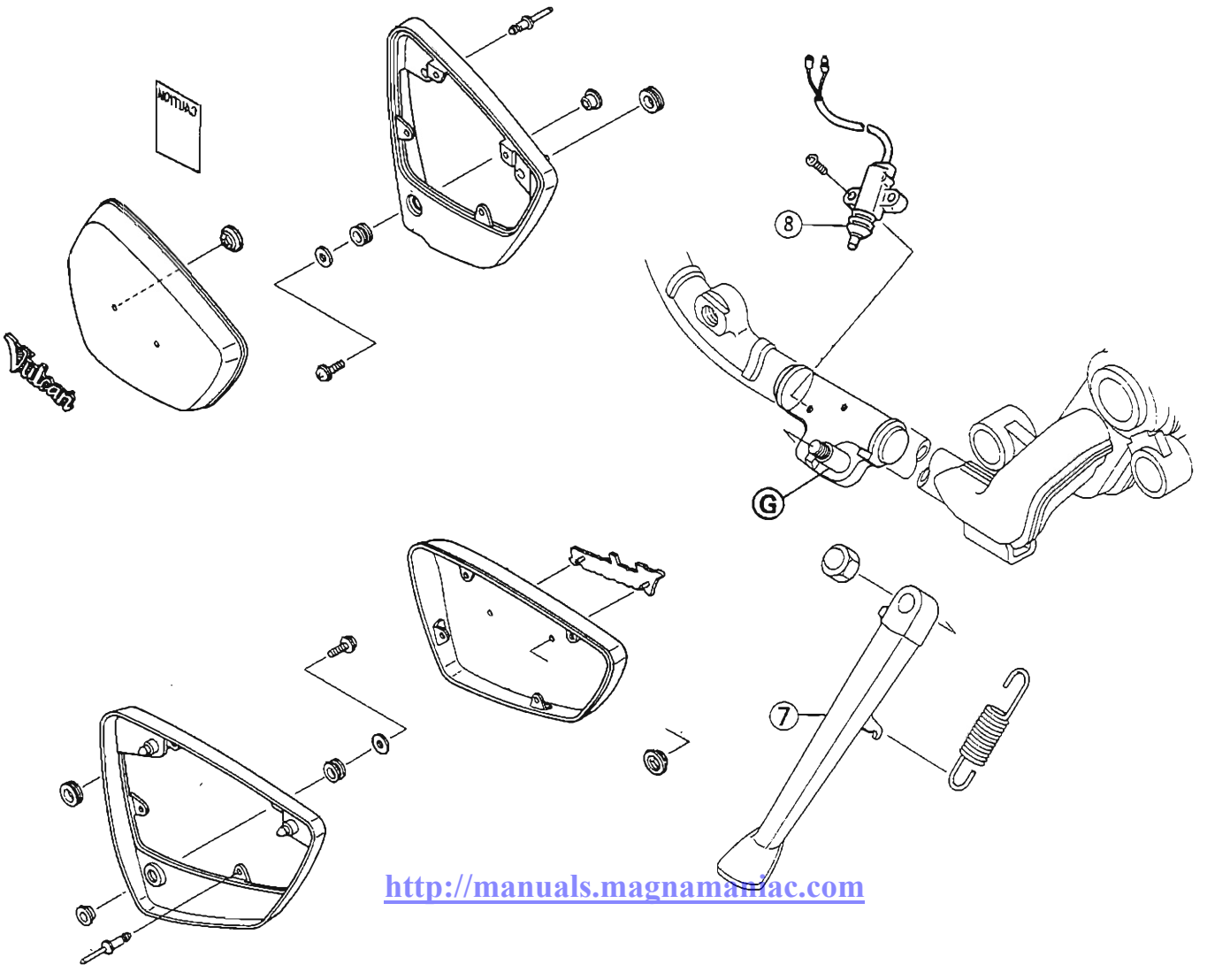

http://manuals.magnamaniac.com

Right Down Tube

Removal (To Access Right Engine Cover)

- Remove the muffler (see Engine Top End chapter).
- Place suitable stand under the crankcase to support the engine.

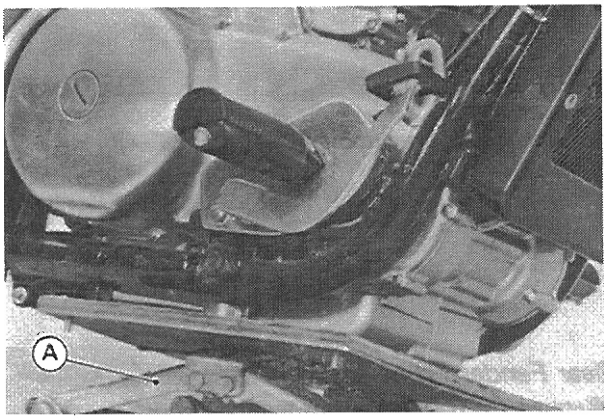

A. Stand

- Remove the radiator cover.
- Unscrew the radiator lower mounting bolts.

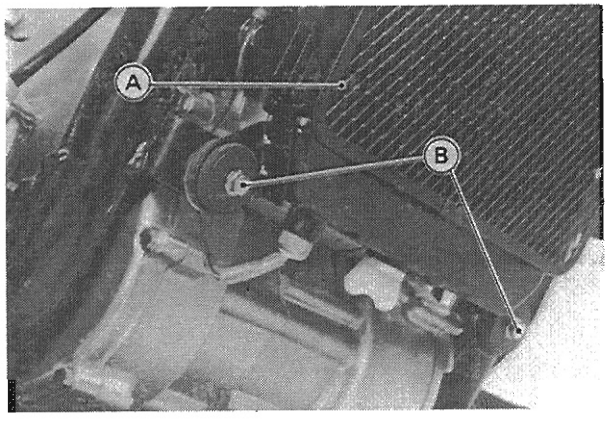

A. Radiator B. Lower Mounting Bolts

- Remove the coolant reservoir tank cover (see Cooling System chapter), and take the tank out of the bracket.
- Remove the fuel tank and RH frame top tube cover.
- Disconnect the rear brake light switch wire connectors.
- Unbolt the following.

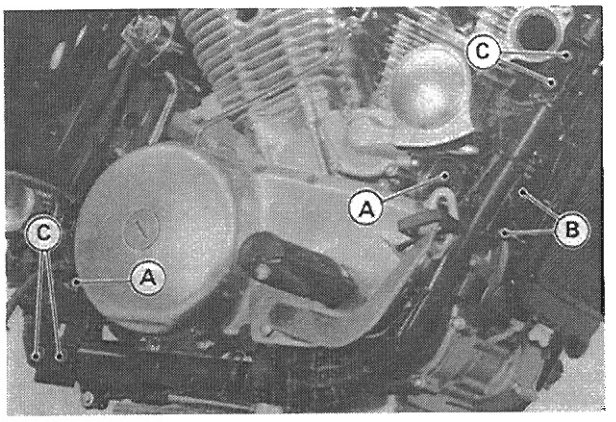

A. Engine Mounting Bolts C. Down Tube Bolts
B. Bracket Bolts

- Take the right down tube out of the frame toward the rear

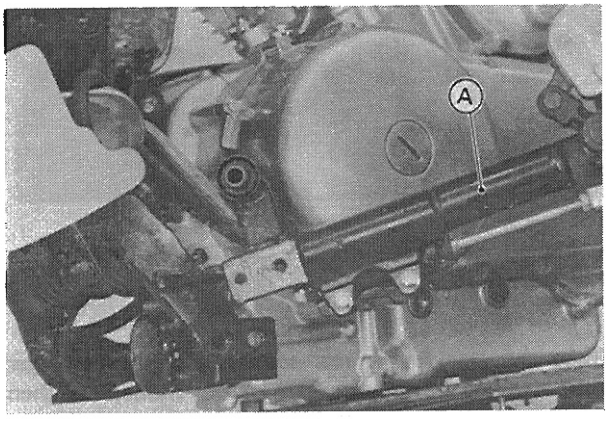

A. Down Tube

Rear Fender

Rear Fender Rear Section Removal

- Disconnect the rear turn signal and tail light wire connectors.

http://motorbikemanamaniac.com

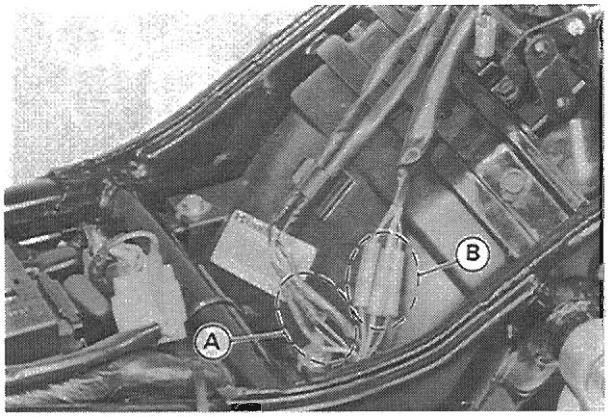

A. Turn Signal Light Connectors
B. Tail Light Connectors

●Remove the rear fender rear section bolts.
●Remove both of the back frame bolts.

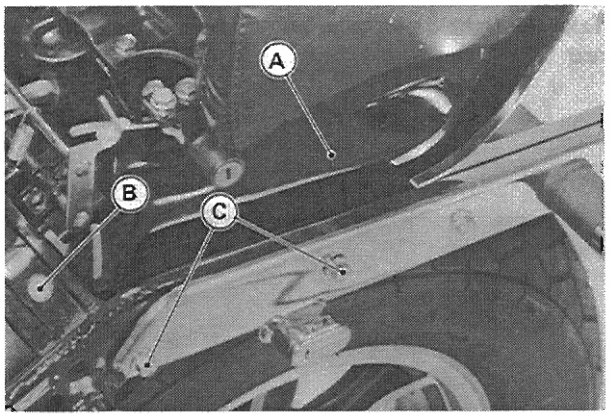

A. Rear Fender Rear Section
B. Fender Bolt
C. Back Frame Bolts

●Take the rear fender rear section with the passenger seat and the back frame out of the frame, and then separate them if necessary.
○Remove the rear back frame bolts and disconnect the turn signal wire connectors.

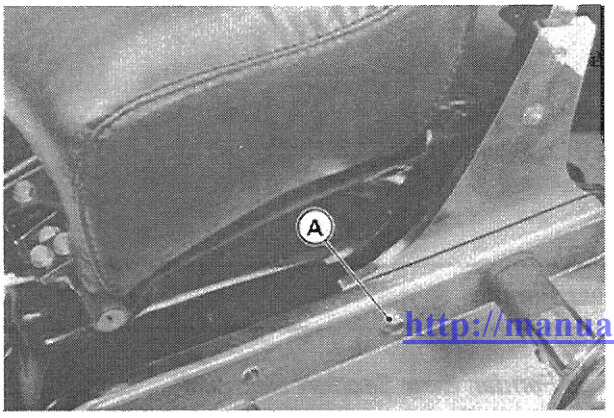

A. Back Frame Bolt

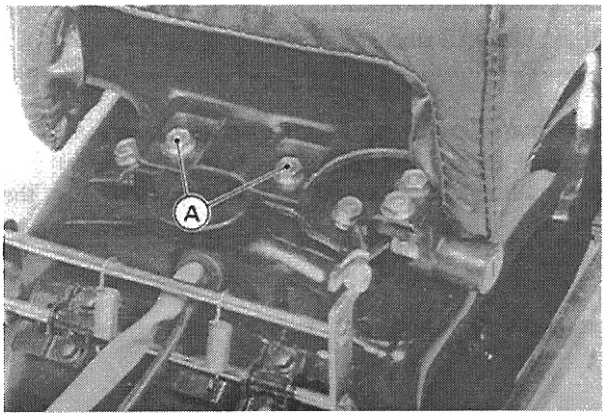

A. Passenger Seat mounting Bolts (VN1500-A)

Rear Fender Front Section Removal

●Remove the rear fender rear section.
●Remove the rear fender front section bolts and put it down.

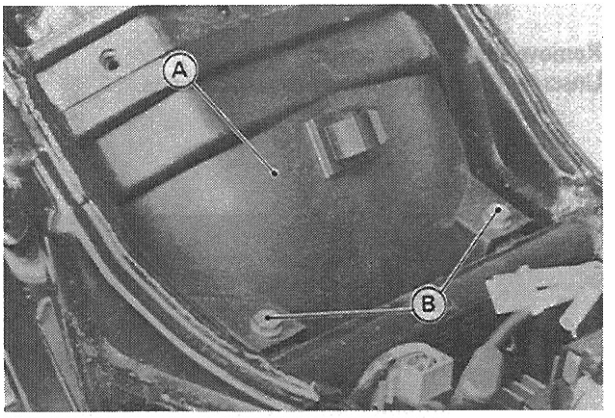

A. Rear Fender Front Section
B. Bolts

Footpeg

Right Footpeg Removal

●Remove the RH exhaust pipe.
○Remove the exhaust pipe holders.
○Loosen the exhaust pipe clamp screw.
○Pull the exhaust pipe out of the muffler.
●Remove the brake pedal link clamp bolt.
●Remove the footpeg mounting bolts.

http://manuals.motorcycle.com

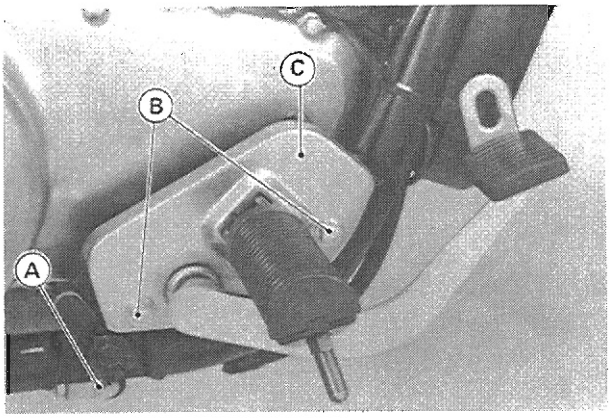

A. Brake Pedal Link Clamp Bolt
B. Footpeg Mounting Bolt
C. Footpeg Assembly.

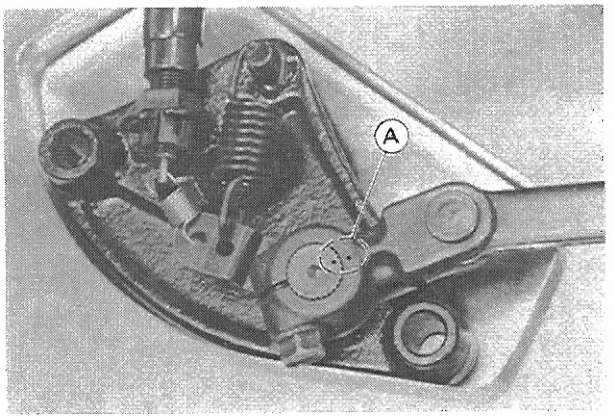

A. Align the punch marks.

●Pull out the footpeg assembly toward the right.

Right Footpeg Installation

●Note the following.

○When installing the footpeg assembly, align the link punch mark with the shaft punch mark.

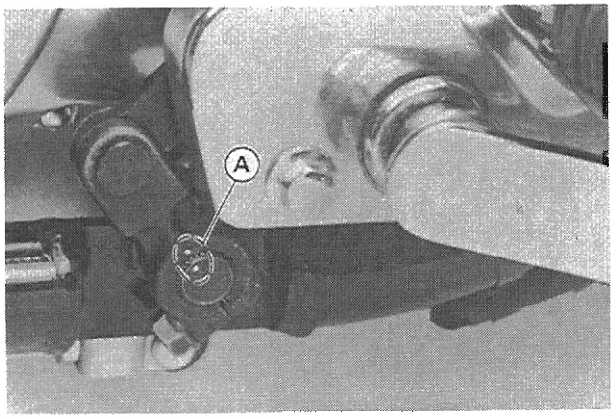

A. Align the punch marks.

http://manuals.magnamaniac.com

○If the footpeg assembly is disassembled, align the inside link punch mark with the shaft punch mark.

Electrical System

Table of Contents

Precautions 15-2
Wiring Diagram (US and Canada) 15-3
Parts Location 15-4
Exploded View 15-5
Specifications 15-9
Special Tools 15-10
Battery 15-11
- Electrolyte Level Inspection 15-11
- Electrolyte Specific Gravity Inspection 15-11
- Initial Charging 15-11
- Ordinary Charging 15-12

Alternator 15-12
- Alternator Rotor Removal 15-12
- Alternator Rotor Installation 15-13
- Alternator Stator Removal 15-13
- Alternator Stator Installation 15-14
- Alternator Inspection 15-14
- Rectifier Inspection 15-14
- Regulator Inspection 15-15
- Regulator/Rectifier Output Voltage Inspection 15-17

Ignition System 15-17
- Pickup Coil Removal 15-17
- Pickup Coil Installation 15-17
- Pickup Coil Inspection 15-18
- Ignition Coil Removal 15-18
- Ignition Coil Inspection 15-20
- Spark Plug Gap 15-20
- Filter Installation Note 15-23
- IC Igniter Inspection 15-23

Starter Motor 15-23
- Removal 15-23
- Installation 15-24
- Disassembly (To remove the brushes) 15-24
- Assembly 15-25
- Brush Inspection 15-26
- Commutator Cleaning and Inspection 15-26
- Armature Inspection 15-26
- Negative Brush and Lead Assembly Inspection 15-26
- Positive Brush and Lead Assembly Inspection 15-28
- Starter Relay Inspection 15-28

Headlight 15-28
- Headlight Beam Horizontal Adjustment 15-28
- Headlight Beam Vertical Adjustment 15-28
- Removal 15-29
- Bulb Replacement Notes 15-29
- Reserve Lighting System Inspection . . 15-30

Fuel Pump 15-31
- Internal Resistance 15-32
- Operates Check 15-32

Cooling Fan System 15-32
- Fan System Circuit Inspection 15-32
- Fan Inspection 15-32
- Fan Relay Inspection 15-32

Meter, Gauge 15-33
- Speedometer Removal 15-33
- Bulb Replacement (Meter and Indicator Light) 15-34
- Fuel Gauge Operation Inspection (VN1500-A) 15-34
- Fuel Gauge Sensor Inspection (VN1500-A) 15-34

Switch and Sensors 15-35
- Rear Brake Light Switch Adjustment 15-35
- Fan Switch Inspection 15-36

Junction Box and Main Fuse 15-36
- Fuse Removal (Junction Box) 15-36
- Fuse Installation 15-37
- Main Fuse Removal 15-37
- Fuse Inspection 15-37
- Junction Box Fuse Circuit Inspection 15-37
- Fan, Starter Circuit and Headlight Relay Inspection 15-37
- Diode Circuit Inspection 15-38

Wiring Diagram (Other than US and Canada) 15-39

http://manuals.magnamaniac.com

15

Precautions

There are numbers of important precautions that are musts when servicing electrical system. Learn and observe all the rules below.

- Do not reverse the battery lead connections. This will burn out the diodes in the electrical parts.
- Always check battery condition before condemning other parts of an electrical system. A fully charged battery is a must for conducting accurate electrical system tests.
- The electrical parts should never be struck sharply, as with a hammer, or allowed to fall on a hard surface. Such a shock to the parts can damage them.
- To prevent damage to electrical parts, do not disconnect the battery leads or any other electrical connections when the ignition switch is on, or while the engine is running.
- Because of the large amount of current, never keep the starter switch pushed when the starter motor will not turn over, or the current may burn out the starter motor windings.
- Do not use a meter illumination bulb rated for other than voltage or wattage specified in the wiring diagram, as the meter or gauge panel could be warped by excessive heat radiated from the bulb.
- Take care not to short the leads that are directly connected to the battery positive (+) terminal to the chassis ground.
- Troubles may involve one or in some cases all items. Never replace a defective part without determining what CAUSED the failure. If the failure was brought on by some other item or items, they too must be repaired or replaced, or the new replacement will soon fail again.
- Make sure all connectors in the circuit are clean and tight, and examine wires for signs of burning, fraying, etc. Poor wires and bad connections will affect electrical system operation.
- Electrical Connectors

Female Connectors

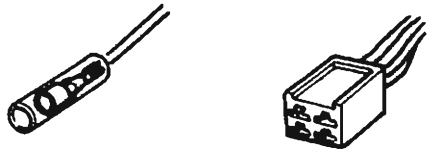

Male Connectors

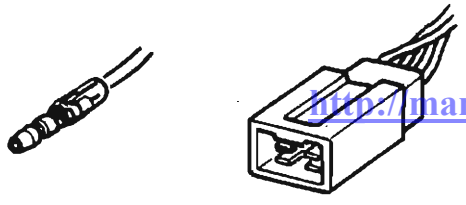

- Color Codes:

BK	Black
BL	Blue
BR	Brown
CH	Chocolate
DG	Dark green
G	Green
GY	Gray
LB	Light blue
LG	Light green
O	Orange
P	Pink
PU	Purple
R	Red
W	White
Y	Yellow

- Measure coil and winding resistance when the part is cold (at room temperature).

http://manuals.magnamaniac.com

VN1500-A1~A8 / B1~B6 Wiring Diagram (US and Canada)

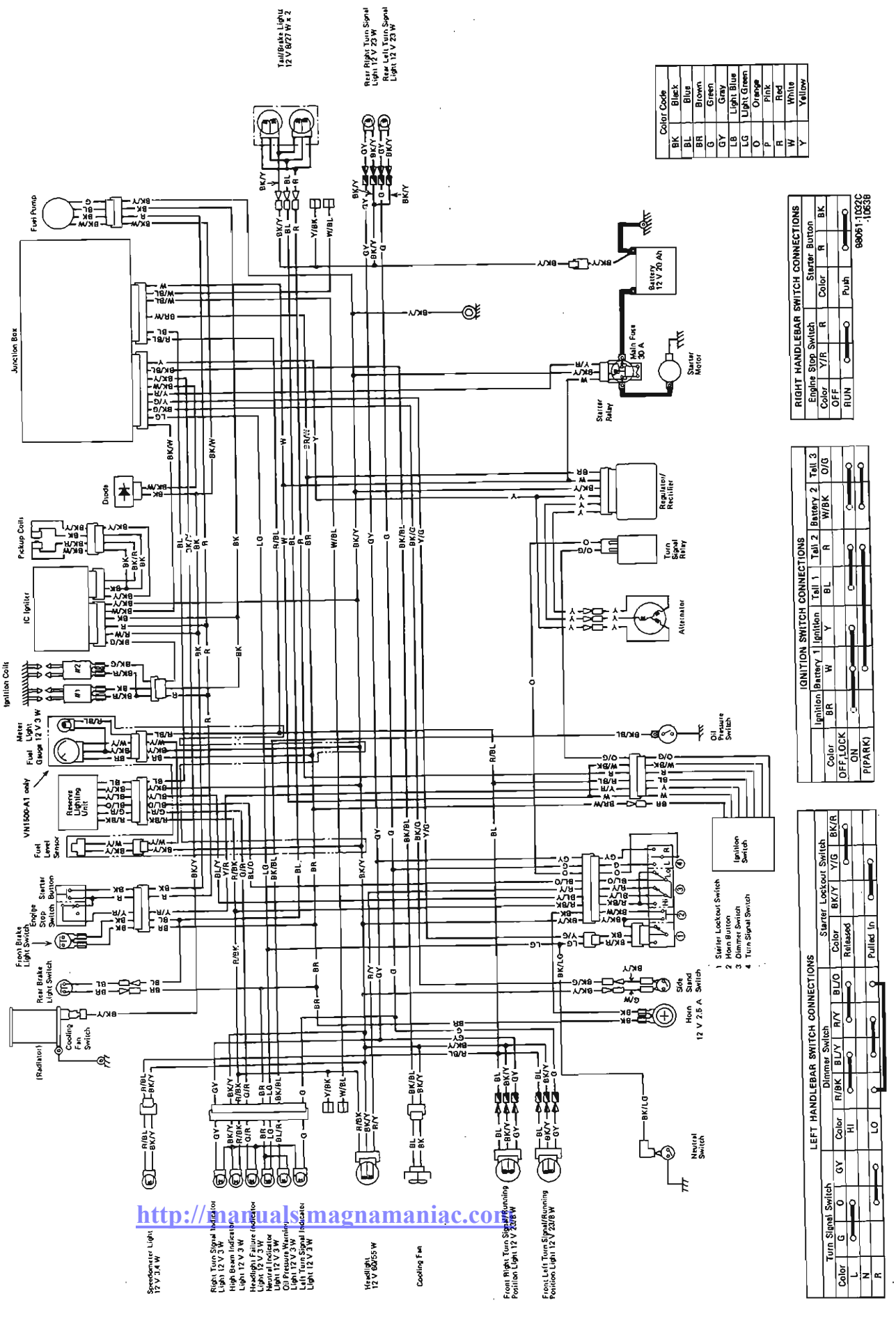

http://manualsmagnamaniac.com

Parts Location

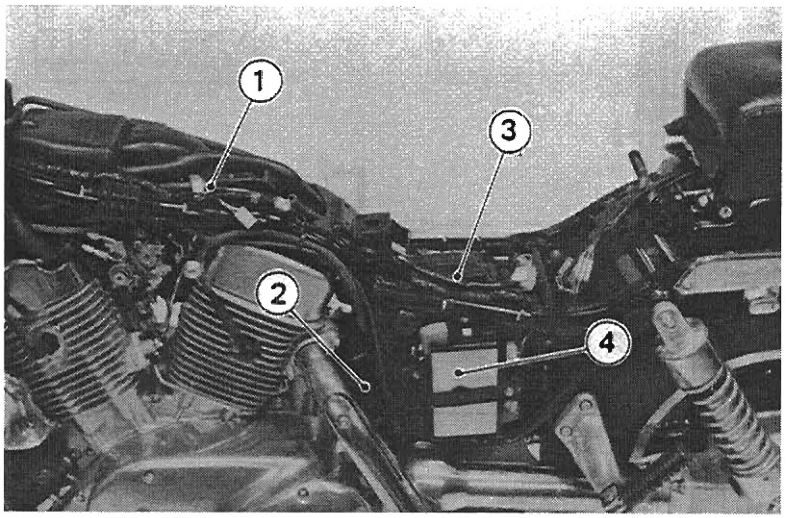

1. Fuel Pump
2. Ignition Coil
3. Junction Box
4. Battery

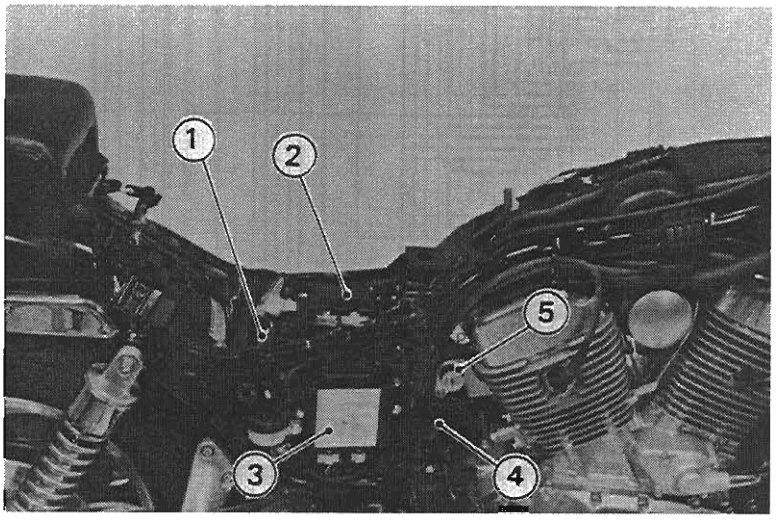

1. Main Fuse and Starter Relay
2. Junction Box
3. IC Igniter
4. Ignition Coil
5. Ignition Switch

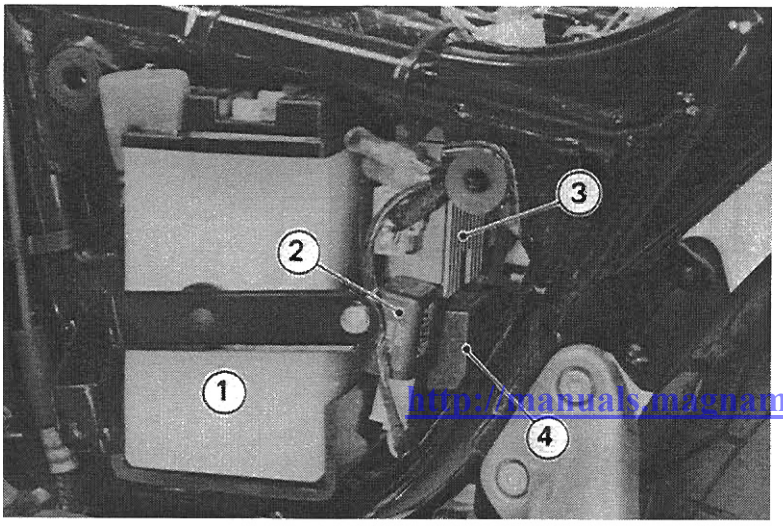

http://manuals.magnamaniac.com

1. Battery
2. Diode
3. Regulator/Rectifier
4. Reserve Lighting Device

Exploded View

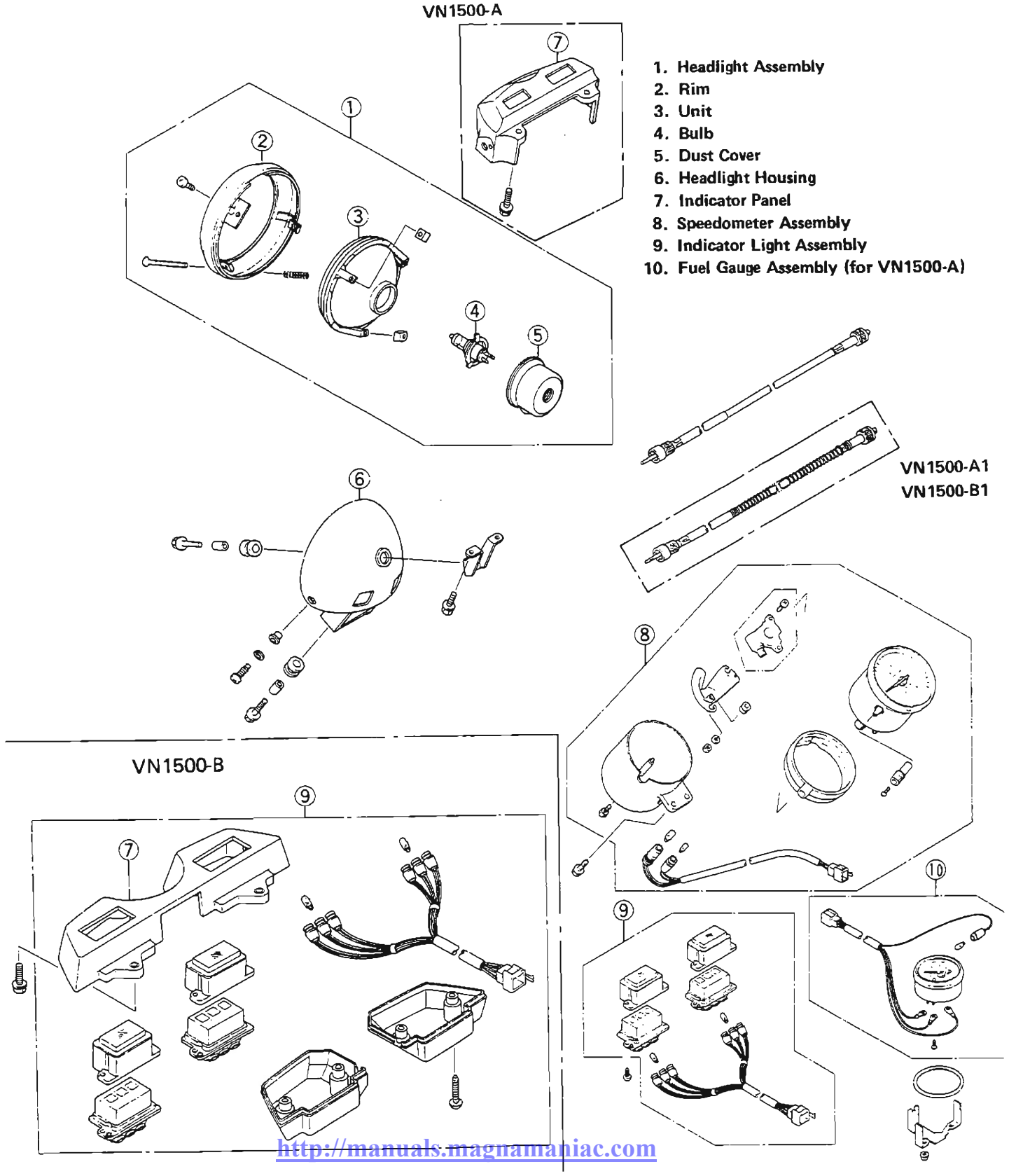

http://manuals.magnamaniac.com

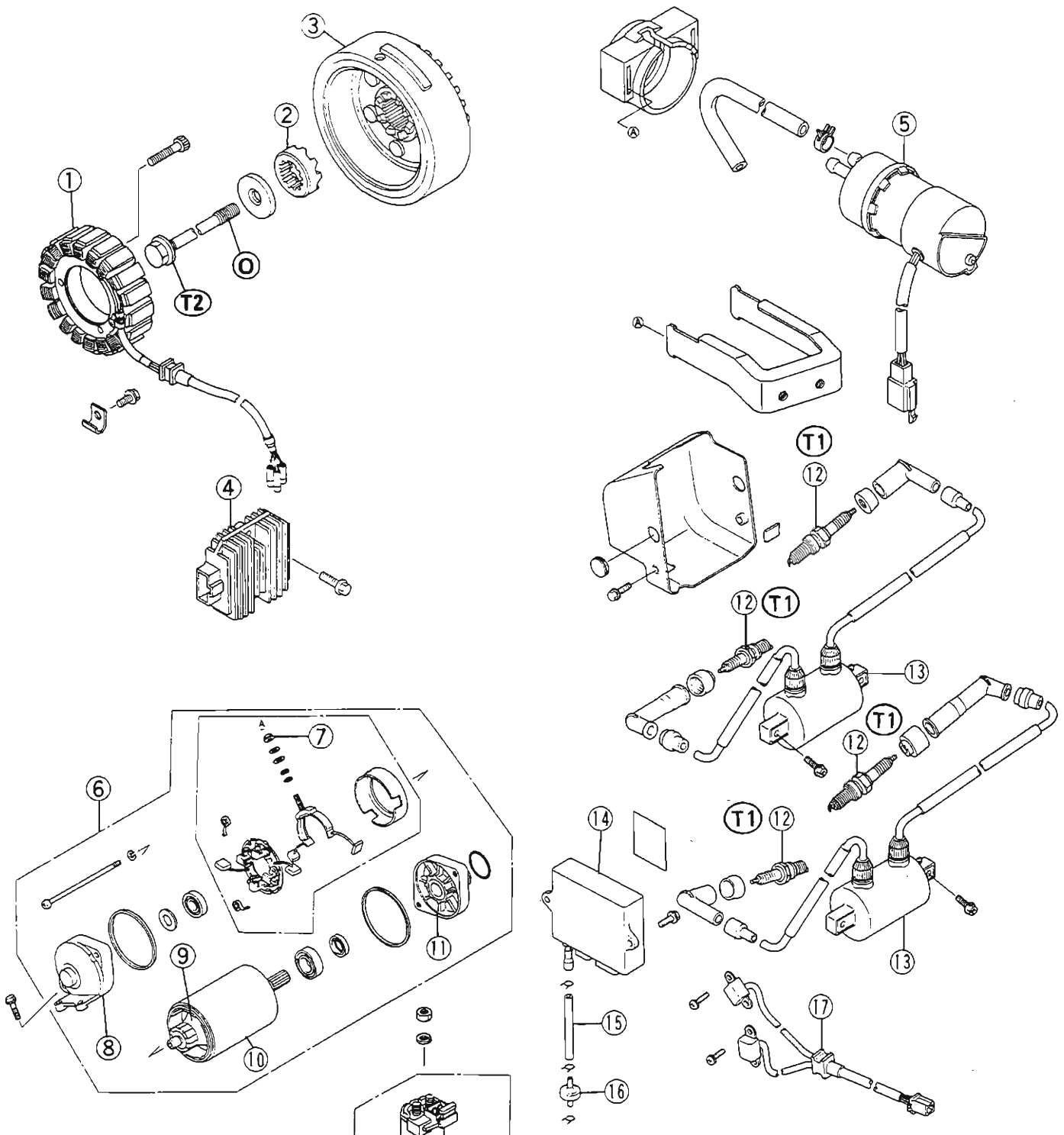

1. Alternator Stator
2. Ratchet
3. Alternator Rotor
4. Regulator/Rectifier
5. Fuel Pump
6. Starter Motor Assembly
7. Terminal Nut
8. LH End Cover
9. Armature
10. Yoke
11. RH End Cover
12. Spark Plug
13. Ignition Coil
14. IC Igniter
15. Vacuum Hose
16. Air Filter
17. Pick-up Coil Assembly

http://manuals.magnamaniac.com

O : Apply oil to the threads.
T1: 18 N-m (1.75 kg-m, 12.5 ft-lb)
T2: 59 N-m (6.0 kg-m, 43 ft-lb)

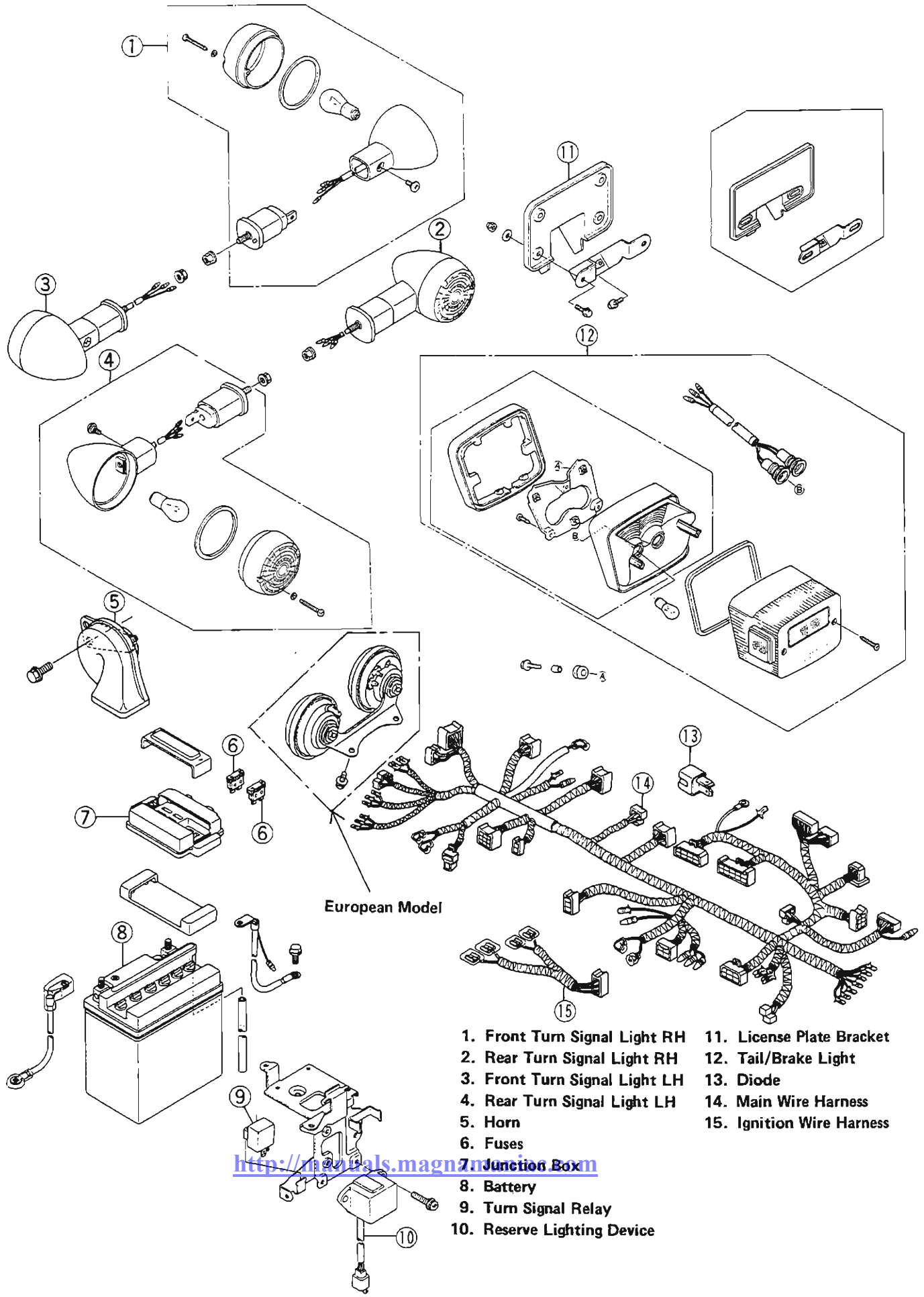

1. Front Turn Signal Light RH
2. Rear Turn Signal Light RH
3. Front Turn Signal Light LH
4. Rear Turn Signal Light LH
5. Horn
6. Fuses
7. Junction Box
8. Battery
9. Turn Signal Relay
10. Reserve Lighting Device
11. License Plate Bracket
12. Tail/Brake Light
13. Diode
14. Main Wire Harness
15. Ignition Wire Harness

http://manuals.magnamusic.com

VN1500-B US, Canada Model

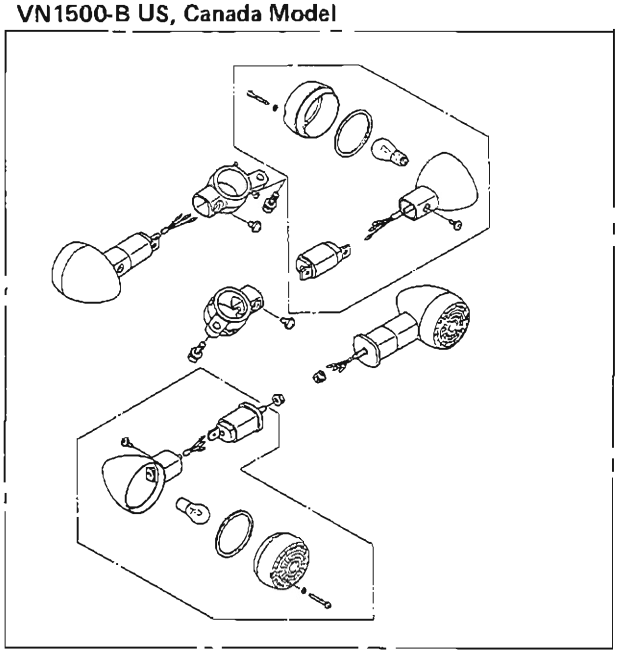

VN1500-B European Model

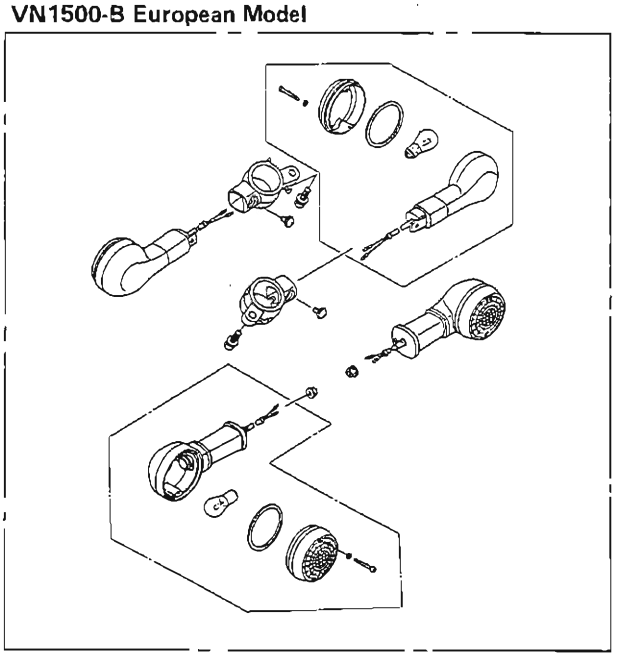

VN1500-A European Model

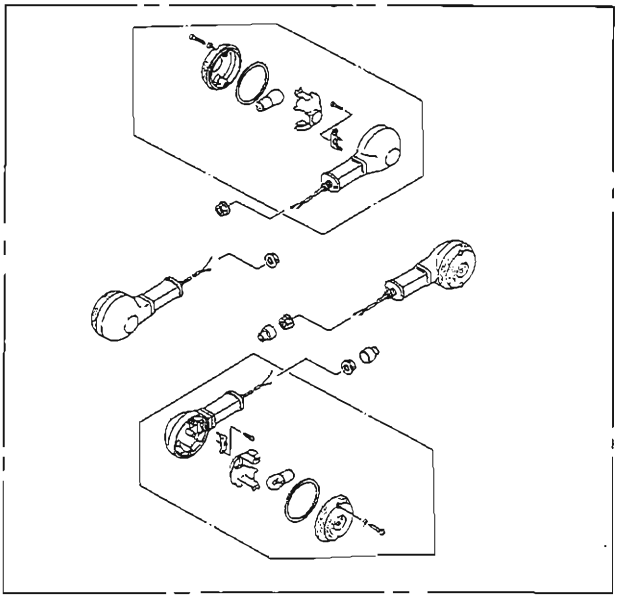

VN1500-A European Model

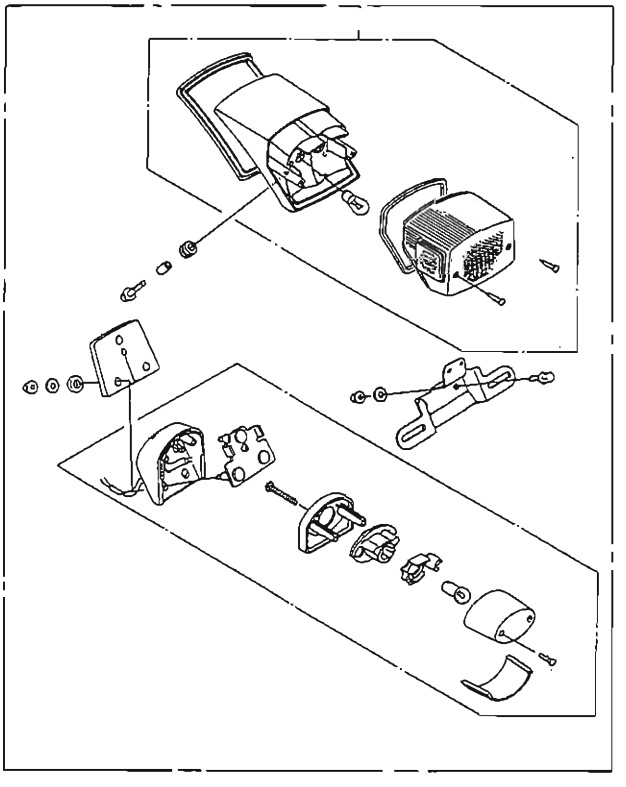

VN1500-B European Model

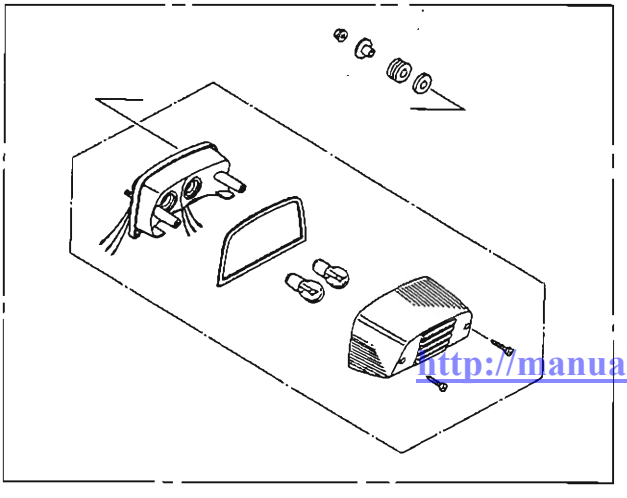

http://manuals.magnamaniac.com

Specifications

Item	Standard	Service Limit
Battery :		
Type	12 V 20 Ah	— — —
Specific gravity	1.280 @20°C (68°F)	— — —
Alternator :		
Charging voltage	14 V @6 000 r/min (rpm)	— — —
Stator coil resistance	0.3 — 0.5 Ω	— — —
Ignition System :		
Pickup coil air gap	1.0 mm	— — —
Pickup coil resistance	440 — 490 Ω	— — —
Ignition coil :		
3 needle arcing distance	7 mm or more	— — —
Primary winding resistance	1.7 — 2.5 Ω	— — —
Secondary winding resistance	18 — 26 kΩ	— — —
Spark plug gap	0.8 — 0.9 mm	— — —
Alternator :		
Charging voltage	28 mm	8.5 mm
Stator coil resistance	12 mm	27 mm
Switches and Sensors :		
Rear brake light switch	ON after about 15 mm pedal travel	— — —
Fan switch : OFF → ON	0.3 — 100°C (201— 212°F)	— — —
ON → OFF	above 90°C (194°F)	— — —
Fuel level sensor resistance	Full position 4 — 10 Ω	— — —
	Empty position 90 — 100 Ω	— — —

Spark Plug

	Standard	Option	
		for Racing	for Cold
US Italy Australia	NGK DP7EA-9 or ND X22EP-U9	NGK DP8EA-9 or ND X24EP-U9	NGK DP6EA-9 or ND X20EP-U9
Others A11~ : US	NGK DPR7EA-9 or ND X22EPR-U9	NGK DPR8EA-9 or ND X24EPR-U9	NGK DP6EA-9 or ND X20EPR-U9

http://manuals.magnamaniac.com

Special Tools

Hand Tester: 57001-983

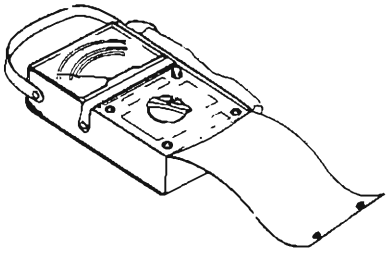

Spark Plug Wrench: 57001-1024

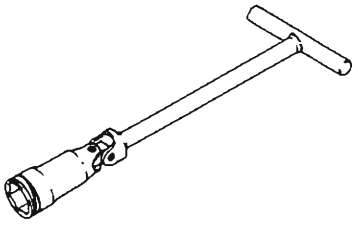

Rotor Holder: 57001-1248

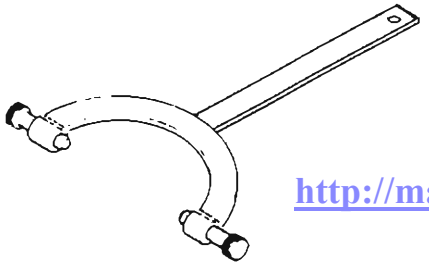

NOTE

○*The flywheel holder (P/N 57001-1313) can be used instead of the rotor holder (P/N 57001-1248).*

Flywheel Holder: 57001-1313

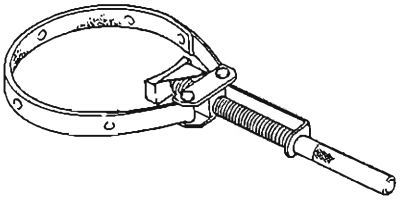

Sealant

Kawasaki Bond (Silicone Sealant): 56019-120

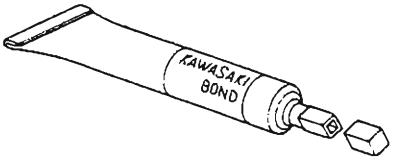

http://manuals.magnamaniac.com

Battery

Electrolyte Level Inspection

●Check the level with the electrolyte level gauge on the battery case. The electrolyte level should be between the upper and the lower level lines.

★If the level of electrolyte in any cell is below the lower level line, add only distilled water to cell, until the level is at the upper level line.

CAUTION

○**Ordinary tap water is not a substitute for distilled water and will shorten the life of the battery.**

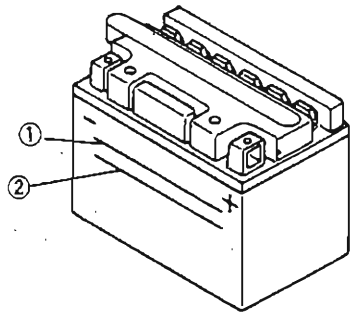

1. Upper Level Line 2. Lower Level Line

Electrolyte Specific Gravity Inspection

●Check battery condition by testing the specific gravity of the electrolyte in each cell with a hydrometer.

○Read the level of the electrolyte on the floating scale.

Hydrometer

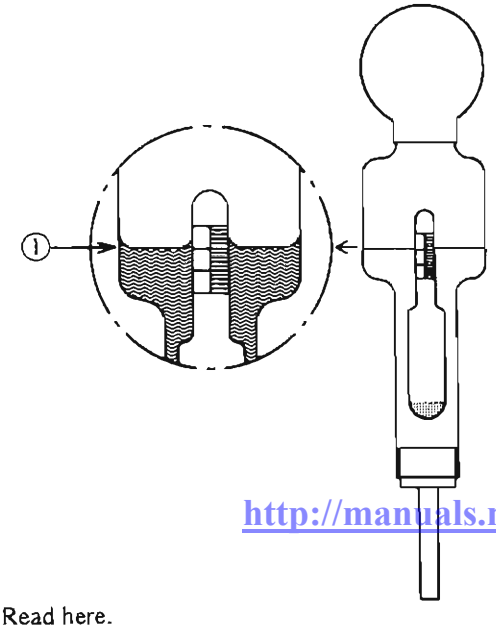

1. Read here.

★If the specific gravity is below 1.20 (charge 60%) the battery needs to be charged.

Initial Charging

WARNING

○**Keep the battery away from sparks and open flames during charging, since the battery gives off an explosive gas mixture of hydrogen and oxygen. When using a battery charger, connect the battery to the charger before turning it on. This procedure prevents sparks at the battery terminals which could ignite any battery gases.**

●Fill each cell to the upper level line on the battery case with fresh electrolyte (special gravity: 1.280) at a temperature of 30°C (86°F) or less. Let the battery stand for about 30 minutes before charging.

NOTE

○*If the electrolyte level drops, add electrolyte to the upper level line before charging.*

●Set the charging rate at 1/10 the battery capacity, and **charge it for 10 hours.** For example, if the battery is rated at 12 Ah, the charging rate would be 1.2A.

CAUTION

○**If the battery is not given a full initial charging, it will discharge in a few weeks. After that it can not be charged by supplement charging.**

○**Do not use a high rate battery charger, as is typically employed at automotive service stations, unless the charger rate can be reduced to the level required. Charging the battery at a rate higher than specified may ruin the battery. Charging at a high rate causes excess heat which can warp the plates and cause internal shorting. Higher-than-normal charging rates also cause the plates to shed active material. Deposits will accumulate, and can cause internal shorting.**

○**If the temperature of the electrolyte rises above 45°C (115°F) during charging, reduce the charging rate to lower the temperature, and increase charging time proportionately.**

http://manuals.magnamarine.com

Ordinary Charging

WARNING

○Keep the battery away from sparks and open flames during charging, since the battery gives off an explosive gas mixture of hydrogen and oxygen. When using a battery charger, connect the battery to the charger before turning it on. This procedure prevents sparks at the battery terminals which could ignite any battery gases.

CAUTION

○Always remove the battery from the motorcycle for charging. If the battery is charged while still installed, battery electrolyte may spill and corrode the frame or other parts of the motorcycle.

CAUTION

○Do not use a high rate battery charger, as is typically employed at automotive service stations, unless the charger rate can be reduced to the level required. Charging the battery at a rate higher than specified may ruin the battery. Charging at a high rate causes excess heat which can warp the plates and cause internal shorting. Higher-than-normal charging rates also cause the plates to shed active material. Deposits will accumulate, and can cause internal shorting.

○If the temperature of the electrolyte rises above 45°C (115°F) during charging, reduce the charging rate to lower the temperature, and increase charging time proportionately.

●Check the electrolyte level after charging.

Battery Charging Rate/Time Table (12V 20Ah)

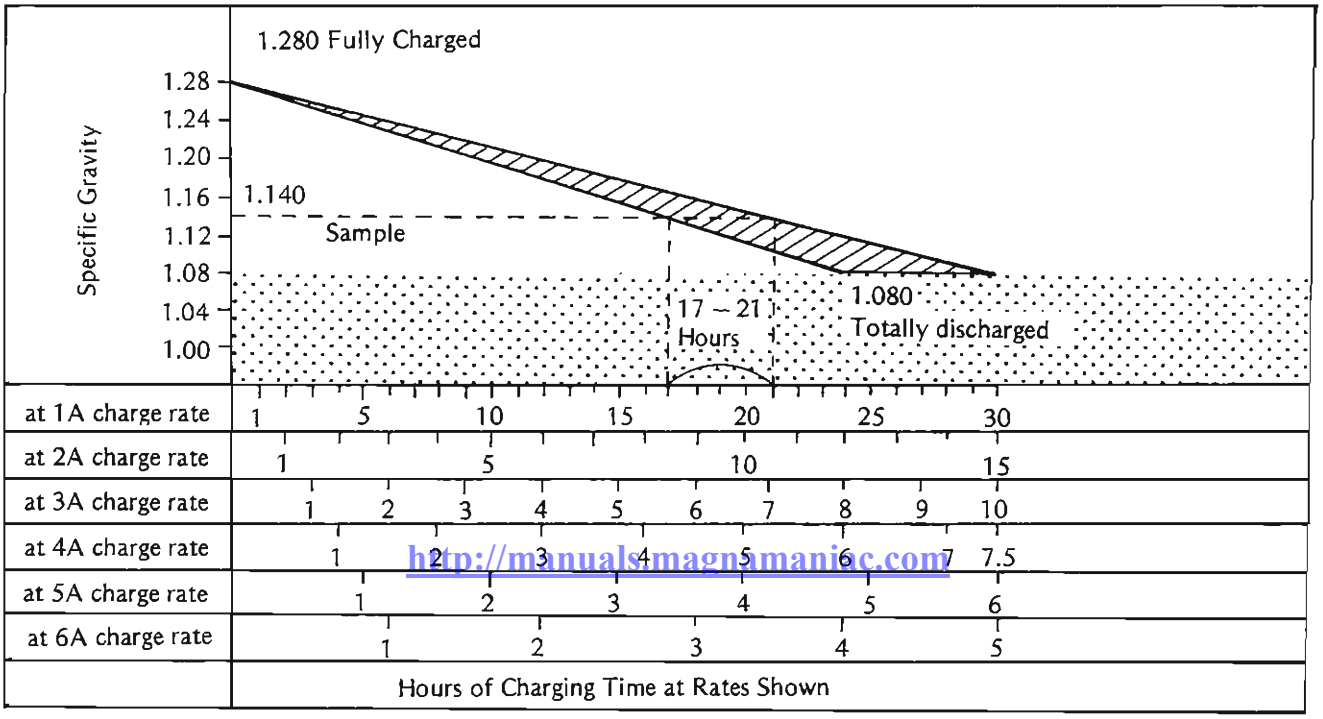

http://manuals.magnamanic.com

Alternator

Alternator Rotor Removal

●Remove the engine (see Engine Removal/Installation chapter).
●Set the engine on a clean surface and hold the engine steady while parts are being removed.
●Remove the alternator outer cover.
●Remove the shift lever assembly.
●Remove the alternator inner cover.

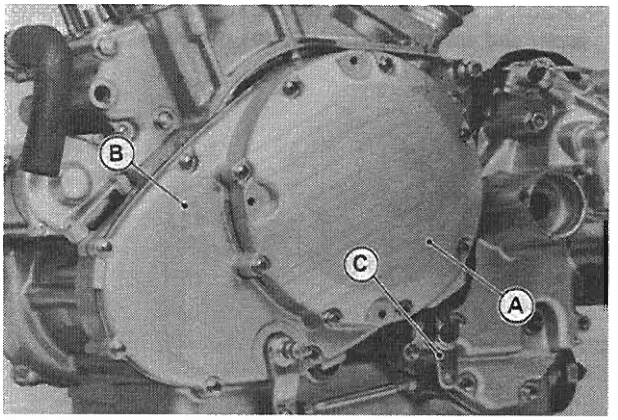

A. Outer Cover
B. Inner Cover
C. Shift Lever Assembly

●Remove the alternator rotor bolt by using the rotor holder (special tool).

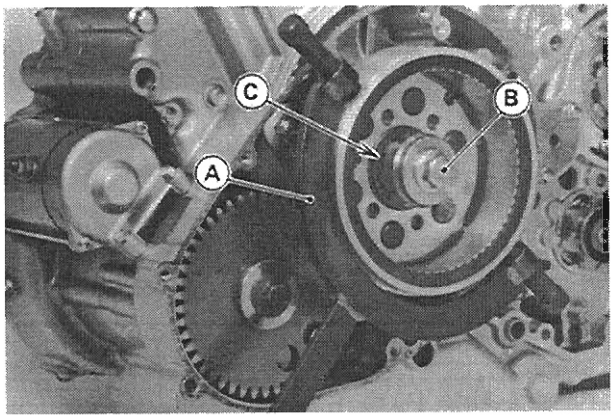

A. Rotor Holder: 57001-1248 C. Ratchet
B. Rotor Bolt

●Take the alternator rotor with spacer and ratchet off the crankshaft.

Alternator Rotor Installation

●Note the following.
○Fit the alignment notch of the splines in the alternator rotor onto the alignment portion of the splines on the crankshaft end.

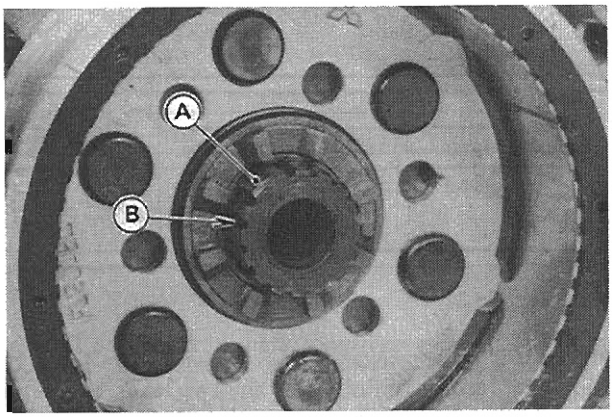

A. Alignment Portion B. Splines

○Engage the alternator rotor mark with the balancer gear mark.

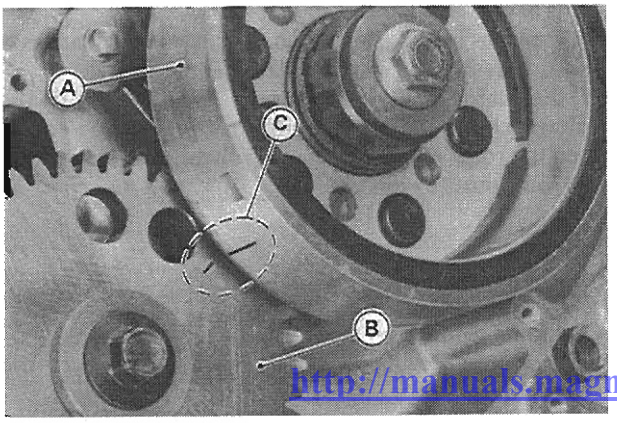

A. Alternator Rotor C. Alignment Marks
B. Balancer Gear

○Tighten the alternator rotor bolt to the specified torque (see Exploded View).
○Install the engine correctly (see Engine Removal/Installation chapter).

Alternator Stator Removal

●Remove the following parts.
Rear Exhaust Pipe Cover
LH Footpeg
Left Engine Cover
Ignition Coil Assembly
●Disconnect the stator coil yellow wire connectors.

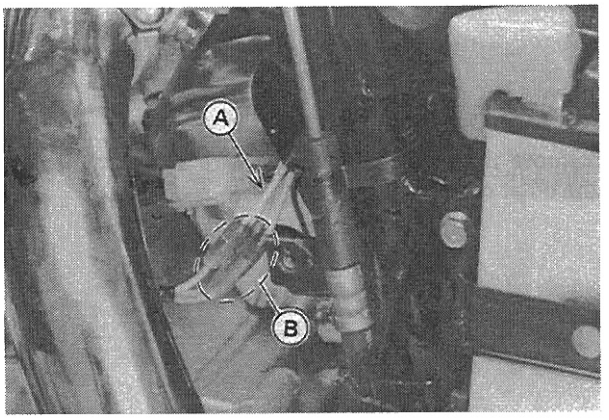

A. Yellow Wires B. Connectors

●Unscrew the cover bolts and remove the alternator outer cover.
○Screw the two of the cover bolts into the bolt holes, and pull the outer cover out of the inner cover using the bolts.

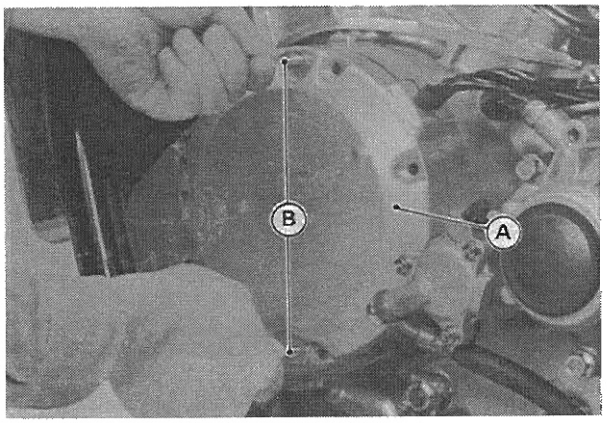

A. Outer Cover B. Pull the bolts.

http://manuals.magnamaniac.com

●Unscrew the Allen bolts and take the stator off the outer cover.

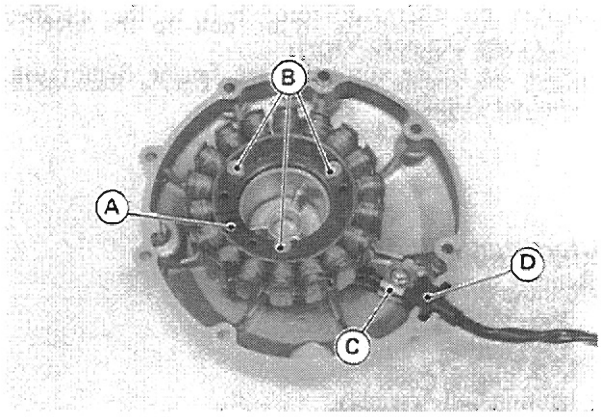

A. Stator
B. Allen Bolts
C. Clamp
D. Grommet

●Remove the bolt and take the wire and grommet off the outer cover.

Alternator Stator Installation

●Note the following.
○Apply silicone sealant to the grommet, and push into the crankcase.

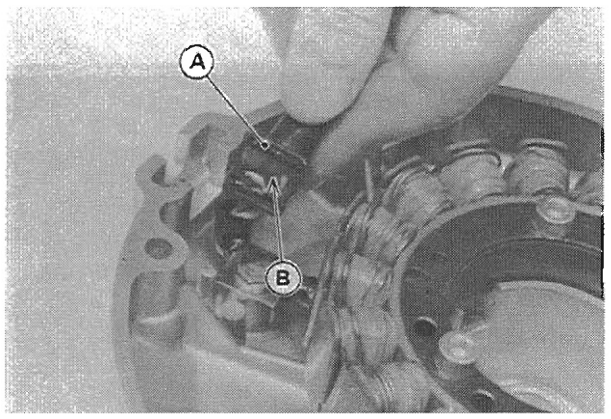

A. Grommet
B. Apply silicone sealant.

○Replace the cover gasket with new one.

Alternator Inspection

●To check the alternator output voltage, do the following procedures. Refer to the appropriate chapters and charging system Wiring Diagram.
Connect the multimeter as shown in table.
Start the engine.
Run it at the rpm given in table.
Note the voltage readings (total 3 measurements).
○Warming up the engine at about 5 minutes.

Alternator Output Voltage

Meter Range	Connections		Reading @3 000 rpm
	Meter (+) to	Meter (–) to	
250 V AC	One yellow lead	Another yellow lead	about 55 V

★If the output voltage shows the value in table, the alternator operates properly and the regulator/rectifier is damaged. A much lower reading than that given in the table indicates that the alternator is defective. Check the stator coil resistance as follows:
Stop the engine
Connect the multimeter as shown in table.
Note the readings (total 3 measurement)

Stator Coil Resistance

Meter Range	Connections		Reading
	Meter (+) to	Meter (–) to	
1 x Ω	One yellow lead (Connector 1)	Another yellow lead (Connector 2)	0.3 – 0.5 Ω

★If there is more resistance than shown in the Table, or no meter reading (infinity) for any two leads, the stator has an open lead and must be replaced. Much less than this resistance means the stator is shorted, and must be replaced.
●Using the highest resistance range of the multimeter, measure the resistance between each of the yellow leads and chassis ground.
★Any meter reading less than infinity (∞) indicates a short, necessitating stator replacement.
★If the stator coils have normal resistance, but the voltage check showed the alternator to be defective; then the rotor magnetism have probably weakened, and the rotor must be replaced.

Rectifier Inspection

●Check the diode resistance as follows.
●Remove the Regulator/Rectifier and disconnect the connector (see Charging System Wiring Diagram).
●Connect an ohmmeter to the regulator/rectifier as shown in the Table, and check the resistance in both directions of each diode following the table.

http://manuals.mamamia.com

Rectifier Circuit Inspection

No.	Connections		Reading	Meter Range
	Meter (+) to	Meter (−) to		
1	Y_1	W	∞	
2	Y_2			
3	Y_3			
4	Y_1	BK/Y	½ scale	x 10 Ω or x 100 Ω
5	Y_2			
6	Y_3			
7	W	Y_1		
8		Y_2		
9		Y_3		
10	BK/Y	Y_1	∞	
11		Y_2		
12		Y_3		

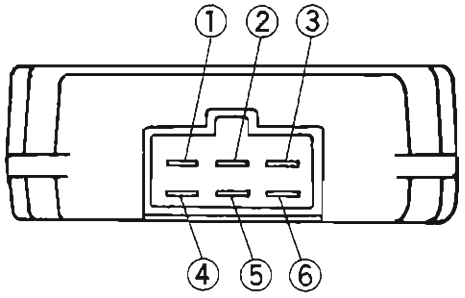

1. White Lead Terminal
2. Brown Lead Terminal
3. Black/Yellow Lead Terminal
4. Y_1 Lead Terminal
5. Y_2 Lead Terminal
6. Y_3 Lead Terminal

NOTE

○*The actual meter reading varies with the meter used and the individual diode, but, negerally speaking, the lower reading should be from zero to the first ½ of the scale.*

Regulator Inspection

To test the regulator out of circuit, use three 12 V batteries and a test light made from a 12 V 3 – 6 W bulb in a socket with leads.

- Remove the regulator/rectifier from the frame.
- Using auxiliary leads, connect one of the yellow lead terminals to the battery (+) terminal, and connect the test light between the black/yellow lead terminal and the battery (−) terminal.
- At this time the bulb should not be lit.

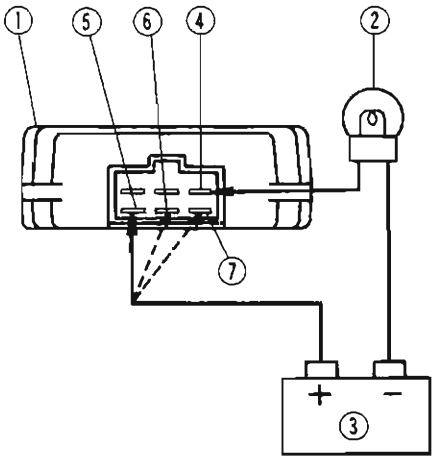

1. Regulator/Rectifier
2. Test Light
3. 12 V Battery
4. BK/Y Lead Terminal
5. Y_1 Lead Terminal
6. Y_2 Lead Terminal
7. Y_3 Lead Terminal

CAUTION

○**The test light works as an indicator and also as a current limiter to protect the regulator/rectifier from excessive current. Do not use ammeter instead of a test light.**

- Connect the brown lead terminal to the other battery (+) terminal and connect the black and yellow lead terminal to the battery (−) terminal momentarily. At this time the bulb should not lit.

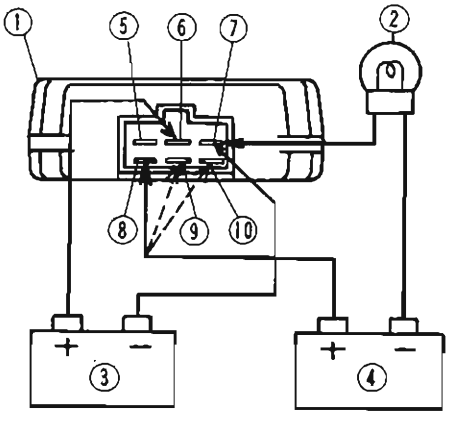

1. Regulator/Rectifier
2. Test Light
3. 12 V Battery
4. 12 V Battery
5. W Lead Terminal
6. BR Lead Terminal
7. BK/Y Lead Terminal
8. Y_1 Lead Terminal
9. Y_2 Lead Terminal
10. Y_3 Lead Terminal

http://manuals.magnamania.com

●To apply 24 V to the regulator/rectifier, connect two 12 V batteries in series, and connect the brown lead terminal to the battery (+) terminal and the black/yellow lead terminal to the battery (−) terminal momentarily. The bulb should now light and stay on until the bulb circuit is opened.

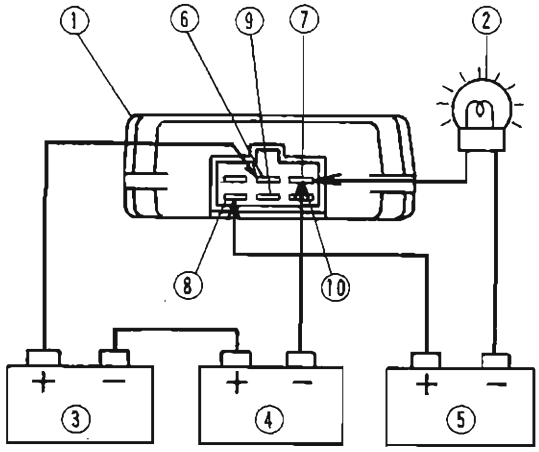

1. Regulator/Rectifier
2. Test Light
3. 12 V Battery
4. 12 V Battery
5. 12 V Battery
6. BR Lead Terminal
7. BK/Y Lead Terminal
8. Y_1 Lead Terminal
9. Y_2 Lead Terminal
10. Y_3 Lead Terminal

CAUTION

Do not apply more than 24 volts. If more than 24 volts is applied, the regulator.rectifier may be damaged. Do not apply 24 V more than a few seconds. If 24 volts is applied for more than a few seconds, the regulator/rectifier may be damaged.

●Repeat the above three steps for other two yellow leads (in connector 2 which leads to the regulator/rectifier).
★Replace the regulator/rectifier if the bulb does not light as described above.

NOTE

○*The above test is not foolproof. If the above checks show the regulator/rectifier is not damaged, but there is still trouble in the charging system, first carefully inspect the alternator, battery, wiring, and all connections. Replace the regulator/rectifier if all these other components turn out good.*

Charging System Wiring Diagram

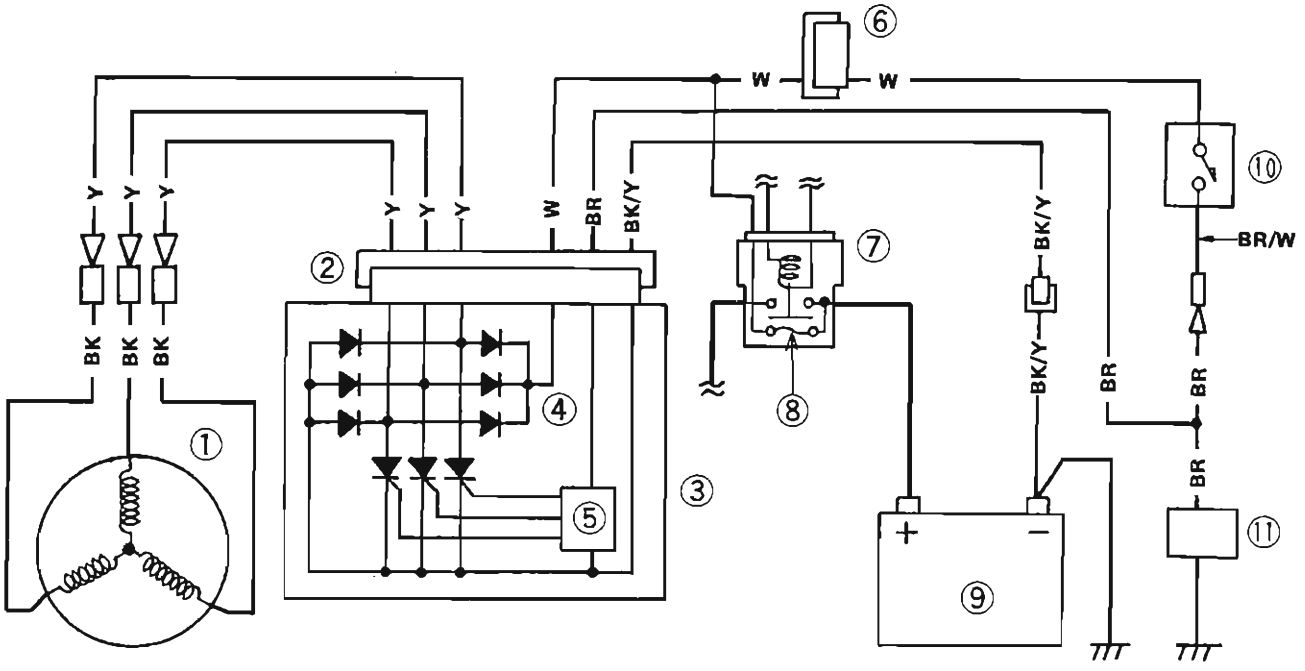

1. Alternator
2. 6-pin Connector
3. Regulator/Rectifier
4. Diode (Rectifier)
5. Control Circuit (IC)
6. 6-pin Connector
7. Starter Relay
8. Main Fuse 30 A
9. Battery
10. Ignition Switch
11. Load

http://manuals.magnamaniac.com

Regulator/Rectifier Output Voltage Inspection

●Check the battery condition (see Battery section).
●Warm up the engine to obtain actual alternator operating conditions.
●Check that the ignition switch is turned off, and connect the multimeter as shown in table.

Regulator/Rectifier Output Voltage

Meter Range	Connectings		Reading
	Meter (+) to	Meter (–) to	
25 V DC	Battery (+) Terminal	Battery (–) Terminal	Battery Voltage – 15 V

●Start the engine, and note the voltage readings at various engine speeds with the headlight turned on and then turned off. (To turn off the headlight, disconnect the black/yellow lead from the headlight unit.) The readings should show nearly battery voltage when the engine speed is low, and, as the engine speed rised, the readings should also rise. But they must be kept under the specified voltage.
●Turn off the ignition switch to stop the engine, and disconnect the multimeter.
★If the regulator/rectifier output voltage is kept between the values given in table, the charging system is considered to be working normally.
★If the output voltage is much higher than the values specified in the table, the regulator/rectifier is defective or the regulator/rectifier leads are loose or open.
★If the battery voltage does not rise as the engine speed increases, the regulator/rectifier is defective or the alternator output is insufficient for the loads. Check the alternator and regulator/rectifier to determine which part is defective.

Ignition System

WARNING

○The ignition system produces extremely high voltage. Do not touch the spark plugs, ignition coils, or spark plug leads while the engine is running, or you could receive a severe electrical shock.

CAUTION

○Do not disconnect the battery leads or any other electrical connections when the ignition switch is on, or while the engine is running. This is to prevent IC igniter damage.
○Do not install the battery backwards. The negative side is grounded. This is to prevent damage to the diodes and IC igniter.

Pickup Coil Removal

●Remove the following.
Rear Exhaust Pipe Cover
LH Footpeg
Left Engine Cover
Ignition Coil Assembly
●Disconnect the pickup coil wire connectors.

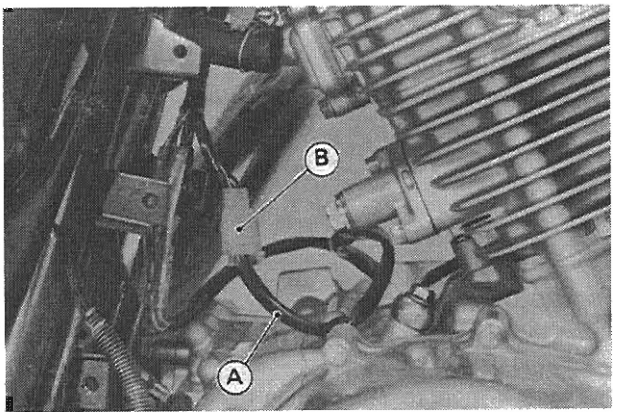

A. Pickup Coil Wires B. Connectors

Alternator Outer Cover
●Unscrew the pickup coil screws and take off the coils with the grommet.

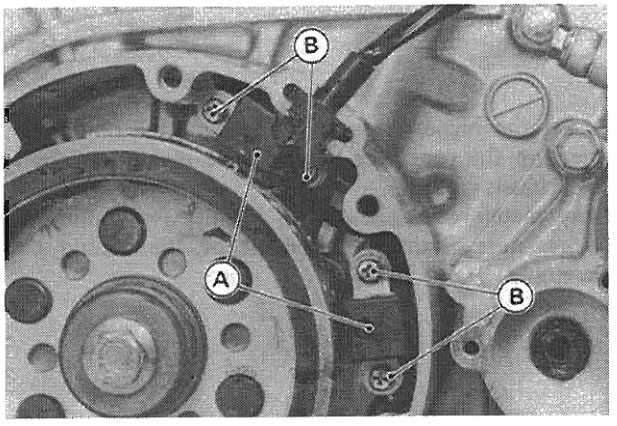

A. Pickup Coils B. Screws

http://manuals.magnamaniac.com

Pickup Coil Installation

●Note the following.
○Apply silicone sealant to the grommet, and push in into the alternator inner cover.

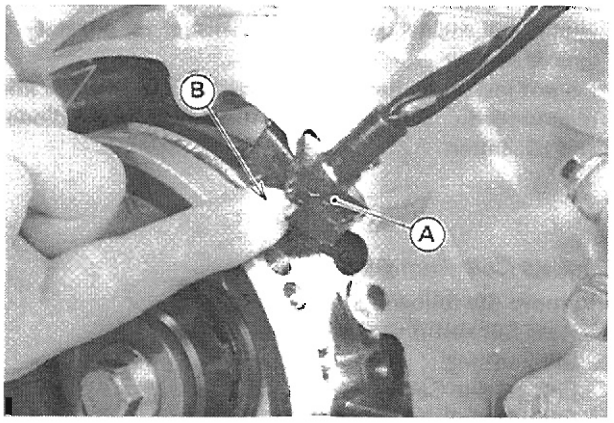

A. Grommet B. Apply silicone sealant.

○Replace the cover gasket with new one.

Pickup Coil Inspection

●Set the ohmmeter to the × 100 Ω range, and connect it to the pickup coil wires.

★If there is more resistance than the specified value, the coil has an open lead and must be replaced. Much less than this resistance means the coil is shorted, and must be replaced.

Pickup Coil Resistance

400 – 490 Ω

●Using the highest resistance range of the ohmmeter, measure the resistance between the pickup coil leads and chassis ground.

★Any meter reading less than infinity (∞) indicates a short, necessitating replacement of the pickup coil assembly.

Ignition Coil Removal

●Remove the seat.

●Cut off the ignition coil wires straps.

●Remove the coolant reservoir tank (see Cooling System chapter), and take it out.

●Unscrew the Allen bolt and take the ignition switch off the frame.

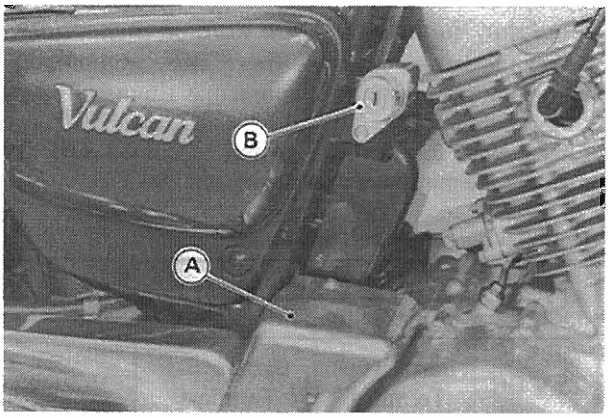

A. Reservoir Tank B. Ignition Switch

●Remove the reservoir tank bracket.

●Remove the ignition coil mounting bolt rubber plug.

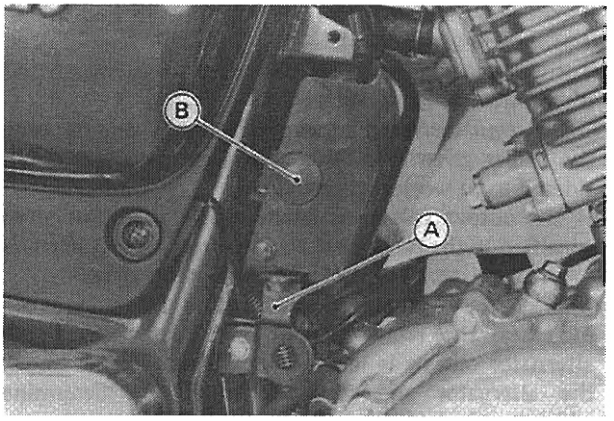

A. Bracket B. Rubber Plug

●Unclamp the rear vacuum switch valve air hose and slide it toward the rear.

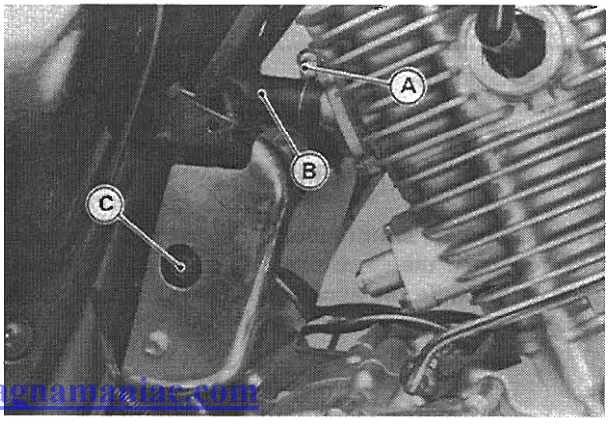

A. Clamp C. Coil Mounting Bolt
B. Air Hose

http://manuals.magnamania.com

●Remove the ignition coil mounting bolts, and take off the coil assembly toward the right hand.
○Clear the coil cover left end from the bracket.

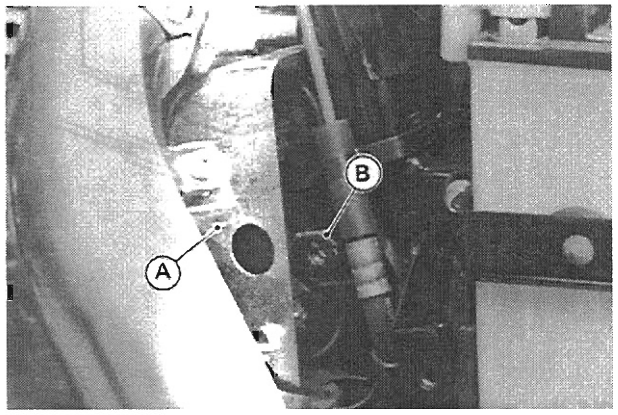

A. Cover B. Bracket

○Clear the caps of the coil from the air suction valve pipe end.

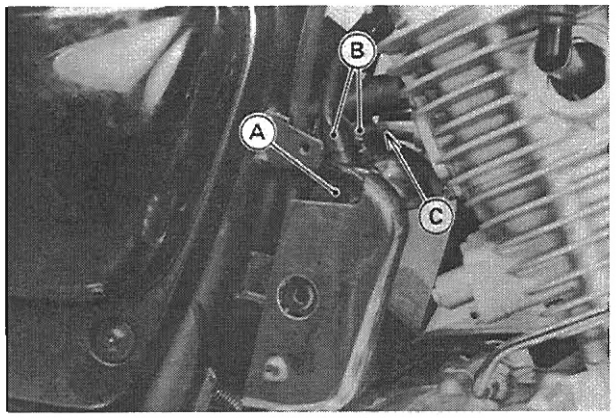

A. Ignition Coil C. Pipe End
B. Caps

○Lift the coil cover right end and pull it out to the rightward.

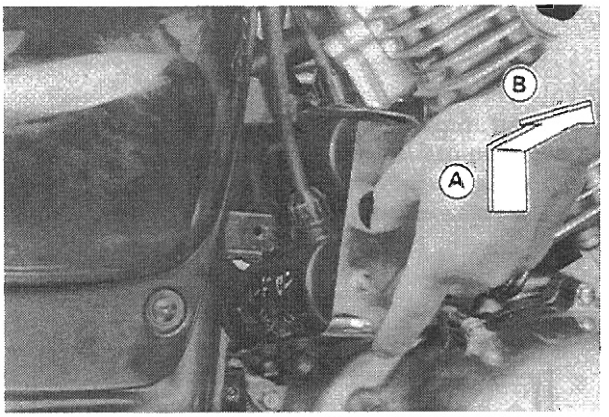

A. Lift the right end.
B. Pull the coil toward the right hand.

●Unscrew the bolts and remove the ignition coil cover.

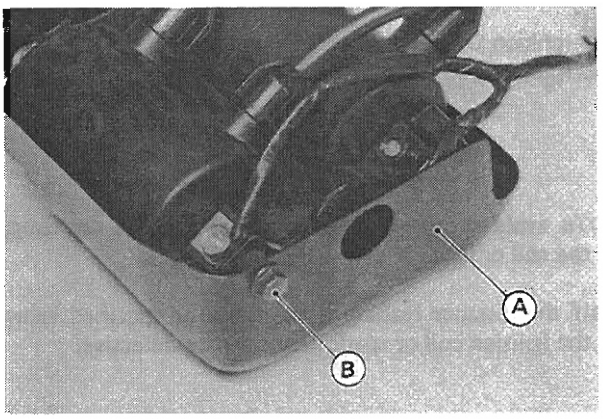

A. Cover B. Bolt

●Unscrew the bolts and separate the ignition coil and the coil bracket.
●Pull the ignition coil primary wires out of the coil terminals.

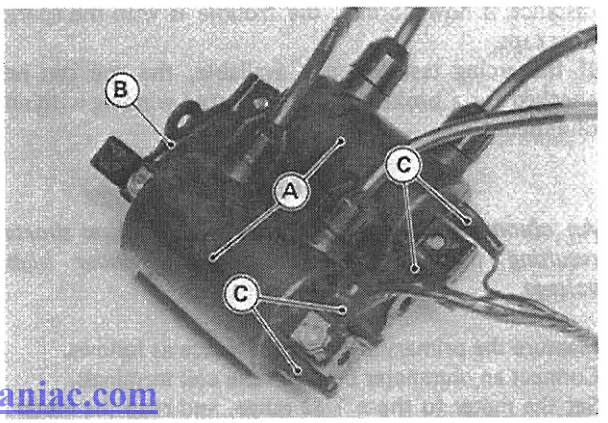

A. Ignition Coils C. Primary Wire Terminal
B. Bracket

http://manuals.magnamaniac.com

Ignition Coil Inspection

NOTE

○*The most accurate test for determining the condition of the ignition coil is made by measuring arcing distance with a commercially available ignition coil tester using the 3-needle method.*

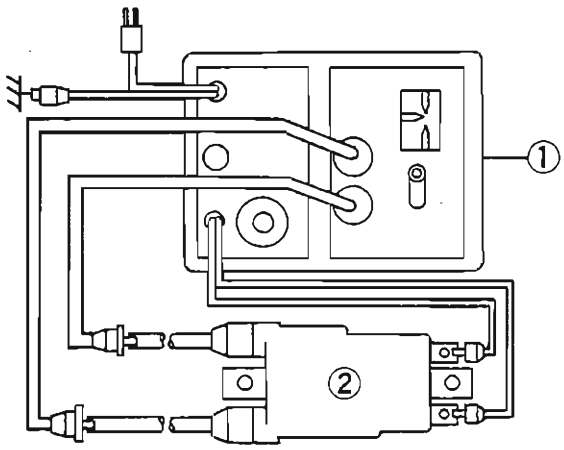

1. Ignition Coil Tester
2. Ignition Coil

WARNING

○**To avoid extremely high voltage shocks, do not touch the coil or lead.**

★If the distance reading is less than the specified value, the ignition coil or spark plug caps are defective.

Ignition Coil Arcing Distance

7 mm or more

●To determine which part is defective, measure the arcing distance again with the spark plug caps removed from the ignition coil.
★If the arcing distance is subnormal as before, the trouble is with the ignition coil itself. If the arcing distance is now normal, the trouble is with the spark plug caps.
●If the arcing tester is not available, the coil can be checked for a broken or badly shorted winding with an ohmmeter.

NOTE

○*An ohmmeter cannot detect layer shorts and shorts resulting from insulation breakdown under high voltage.*

●Measure the primary winding resistance as follows.
○Connect an ohmmeter between the coil terminals.
○Set the meter to the x 1 Ω range, and read the meter.
●Measure the secondary winding resistance as follows.
○Connect an ohmmeter between the spark plug leads.
○Set the meter to the x 1 kΩ range, and read the meter.

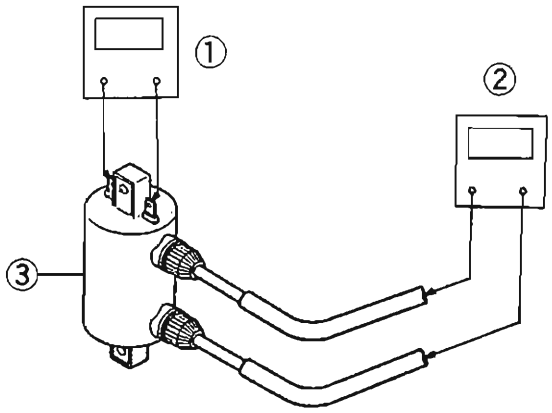

1. Measure primary winding resistance
2. Measure secondary winding resistance
3. Ignition Coil

●If the meter does not read as specified, replace the coil.

Ignition Coil Winding Resistance

Primary windings:	**1.7 – 2.5 Ω**
Secondary windings:	**18 – 26 kΩ**

Spark Plug Gap

●Measure the gap with a wire-type thickness gauge.
★If the gap is incorrect, carefully bend the side electrode with a suitable tool to obtain the correct gap.

Spark Plug Gap

0.8 – 0.9 mm

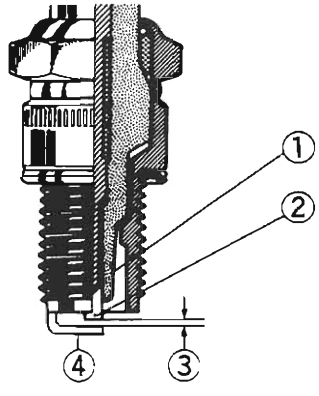

1. Insulator
2. Center Electrode
3. Plug Gap
4. Side Electrode

http://manuals.magnamaniac.com

Ignition Circuit

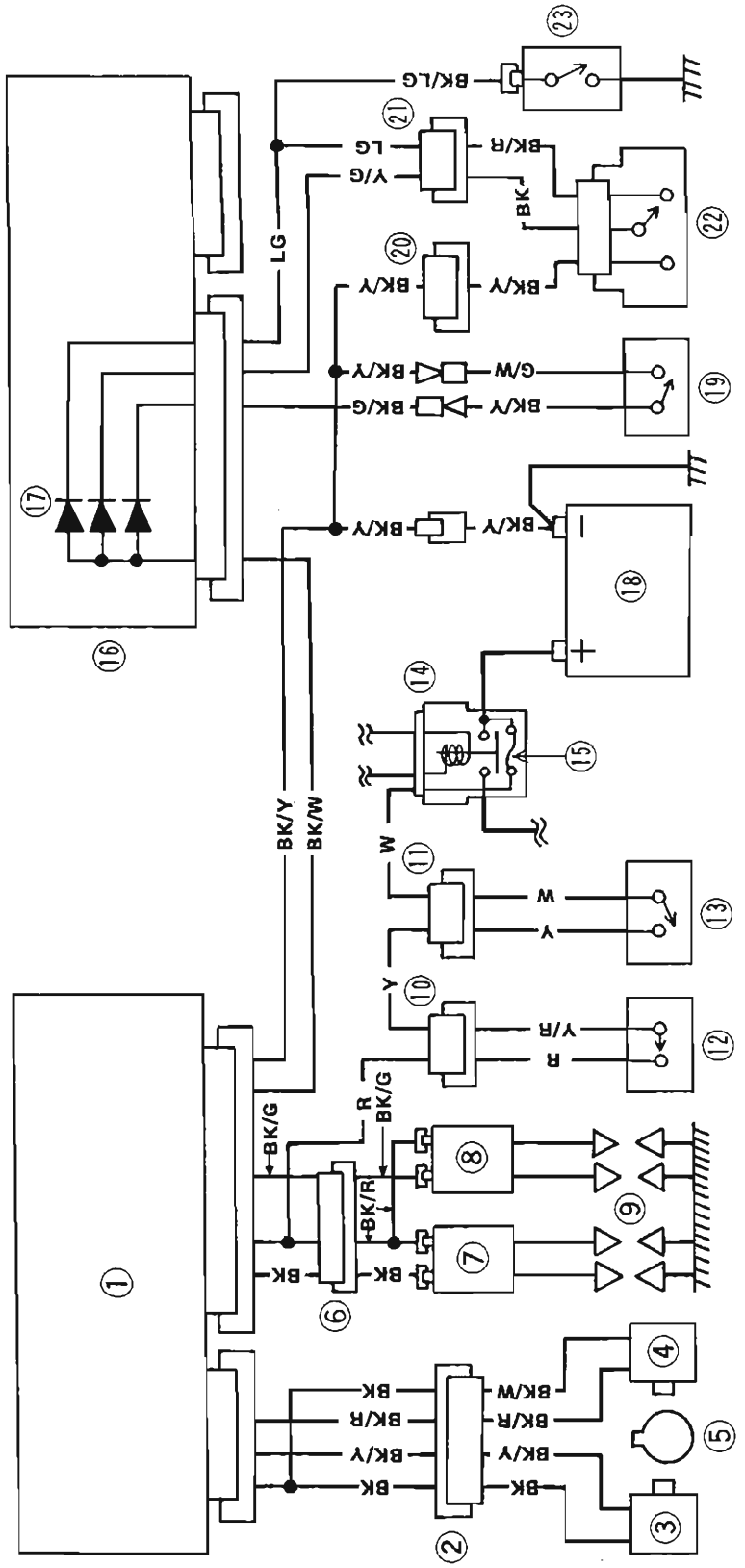

1. IC Igniter
2. 4-pin Connector
3. Pickup Coil (for Front Cylinder)
4. Pickup Coil (for Rear Cylinder)
5. Timing Rotor
6. 3-pin Connector
7. Ignition Coil (for Front Cylinder)
8. Ignition Coil (for Rear Cylinder)
9. Spark Plugs
10. 6-pin Connector
11. 6-pin Connector
12. Engine Stop Switch
13. Ignition Switch
14. Starter Relay
15. Main Fuse 30A
16. Junction Box
17. Diodes
18. Battery
19. Side Stand Switch
20. 9-pin Connector
21. 2-pin Connector
22. Starter Lockout Switch
23. Neutral Switch

http://manuals.magnamaniac.com

IC Igniter Troubleshooting:

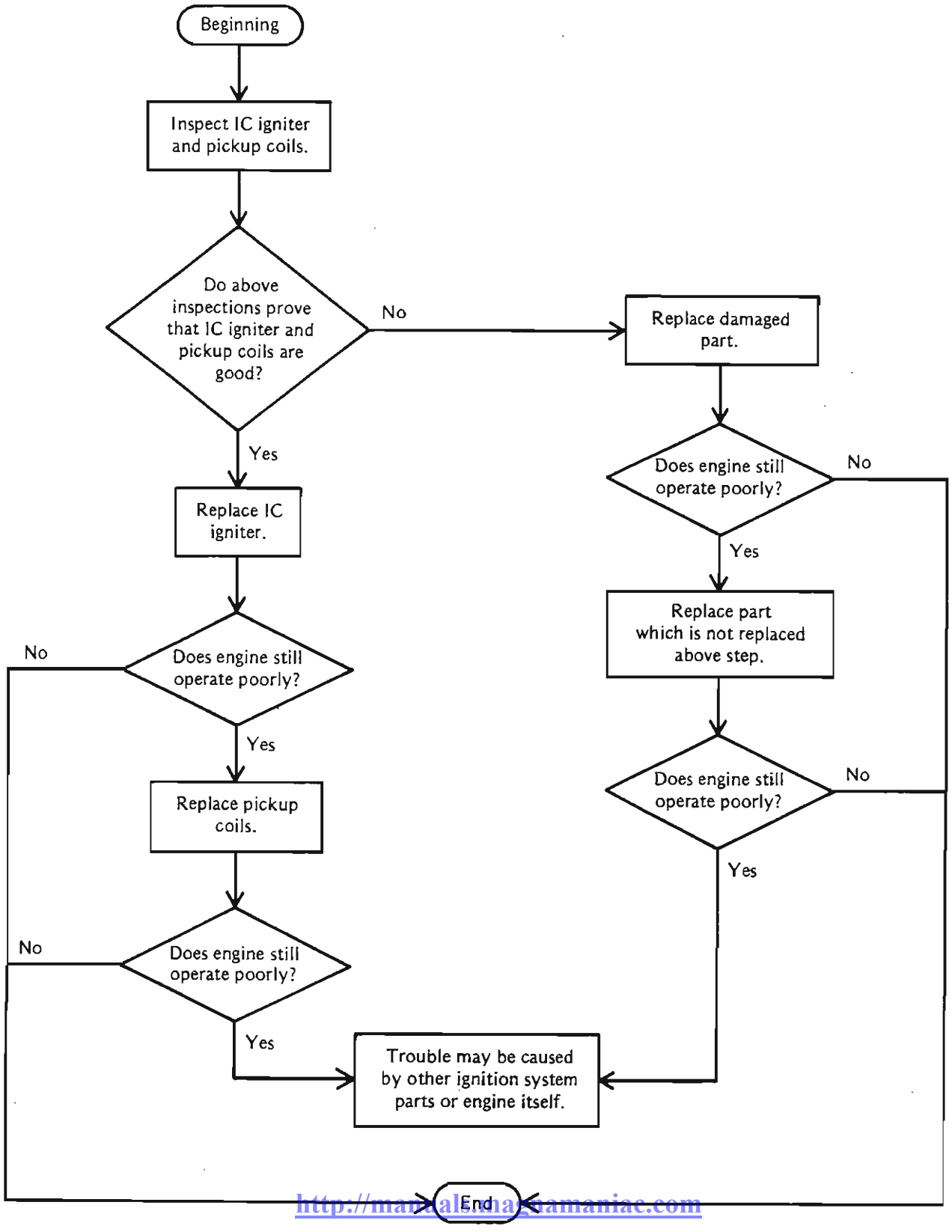

http://manualsmagnamaniac.com

Filter Installation Note

●Connect the filter to the vacuum hoses so that the marked side of the filter faces to the opposite side of the IC igniter.

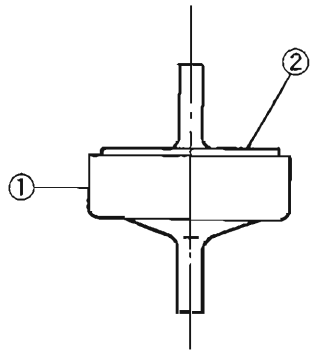

1. Filter
2. Marked Side

IC Igniter Inspection

●Set the ohmmeter to the x 1 kΩ range and make the measurements shown in the table.

★If the meter readings are not as specified, replace the IC igniter.

CAUTION

○**Use only Hand Tester 57001-983 for this test. A tester other than the Kawasaki Hand Tester may show different readings.**

○**If a megger or a meter with a large-capacity battery is used, the IC igniter will be damaged.**

VN1500-A1/B1～A8/B6 : reter to upper figure
VN1500-A9～ : reter to lower figure

Connector Terminal Number

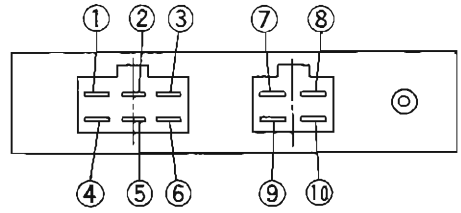

Starter Motor

Removal

●Drain the coolant (see Cooling chapter).

●Remove the radiator lower bolts.

●Loosen the clamp and disconnect the lower radiator hose.

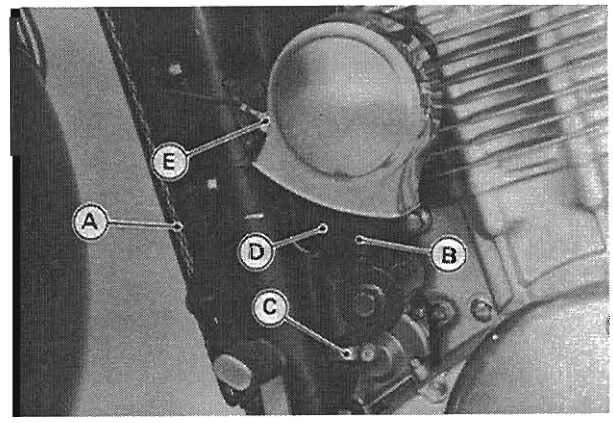

A. Radiator
B. Hose
C. Clamp
D. Fan Connector
E. Ground Wire

(kΩ)

Tester (−) Lead Connection \ Tester (+) Lead Connection	1	2	3	4	5	6	7	8	9	10
1		∞	∞	∞	∞	∞				
2	(25−45) 17−87		(∞) 13−60	(25−45) 18−80	(45−90) 30−150	(16−24) 10−45				
3	(80−1000) 17−87	(120−1000) 13−60		(80−1000) 4.6−19	(15−23) 8.5−35	19−60 2.2−9.5				
4	∞	∞	∞		∞	∞				
5	(40−100) 28−150	(60−150) 50−400	(∞) 17−70	(40−100) 28−150		(20−35) 12−50				
6	(2.3−3.5) 1.2−5.5	(15−24) 10−40	(∞) 2.2−9	(2.3−3.5) 1.2−5.5	(14−21) 8−35					
7								(∞) 0−0.8	(∞) 1−4.6	(∞) 1−4.6
8							(∞) 0−0.8		(1.9−2.5) 1−4.6	(1.9−2.5) 1−4.6
9							(∞) 1−4.8	(1.9−2.5) 1−4.4		(4−4.8) 2.2−9
10							(∞) 1−4.8	(1.9−2.5) 1−4.4	(4−4.8) 2.2−9	

http://manuals.magnamaniac.com

●Disconnect the cooling fan connector, radiator ground wire, and hang the radiator.
●Remove the starter motor bolts and starter motor terminal nut.

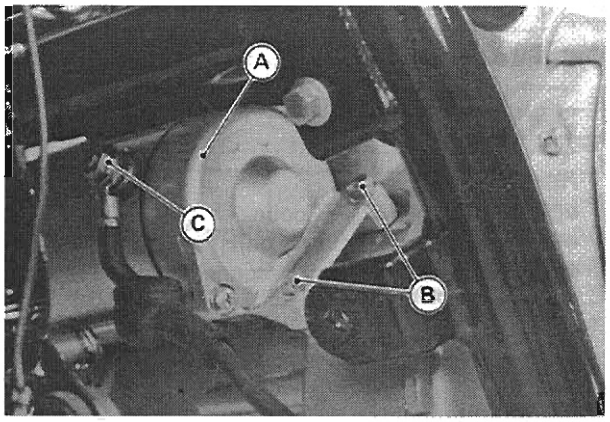

A. Starter Motor
B. Bolts
C. Terminal Nut

●Pull the motor toward the left hand.

Disassembly (To remove the brushes)

●Loosen the screws and remove the both end covers.

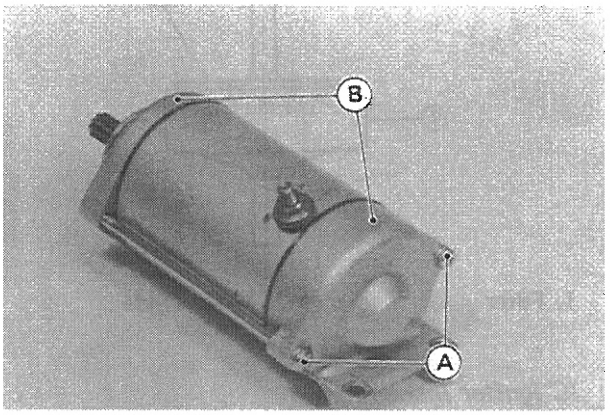

A. Screws
B. Covers

●Pull the armature out of the yoke.
●Take the positive carbon brush wires with blue tube out of the brush holder.

Installation

CAUTION

○**Do not tap the starter motor shaft or body. Tapping on the shaft or body could damage the motor.**

●When installing the starter motor, clean the starter motor legs and crankcase where the starter motor is grounded.

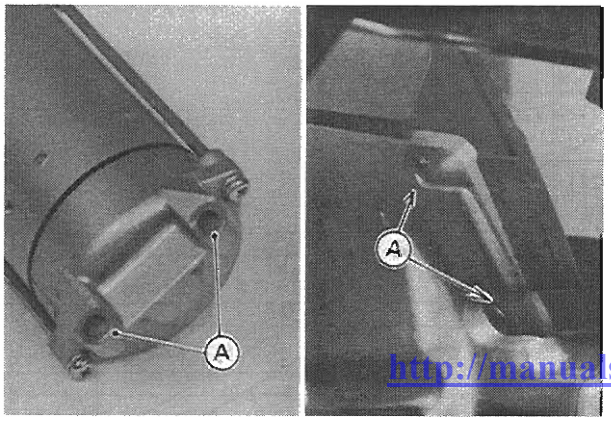

A. Clean Here

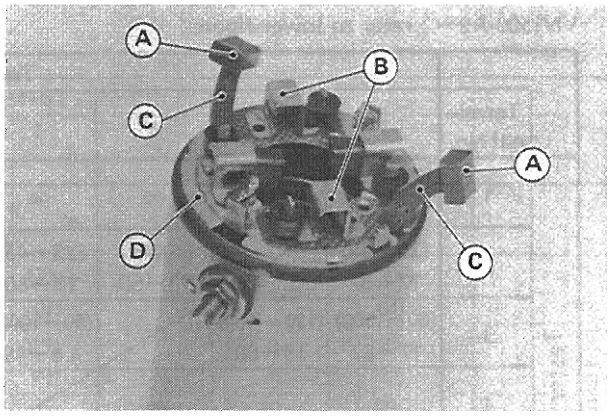

A. Positive Brushes
B. Holders
C. Blue Tubes
D. Brush Plate

http://manuals.magnamaniac.com

●Take off the brush plate from the yoke (with brush wires).
●Unscrew the terminal nut and remove the terminal.
●Take the positive carbon brushes and wires assembly out of the yoke.

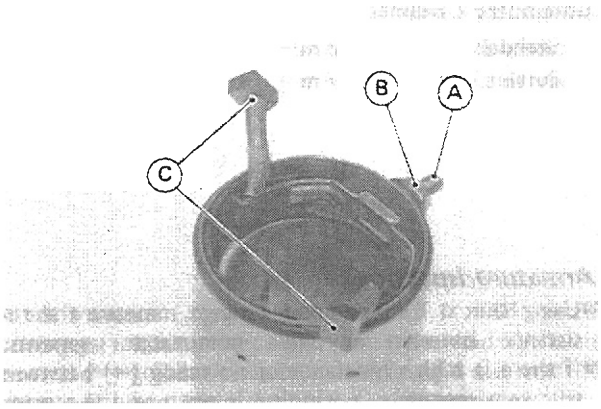

A. Terminal
B. Nut
C. Brushes and Wires Assembly

NOTE

○*Do not remove the negative carbon brushes from the brush plate.*

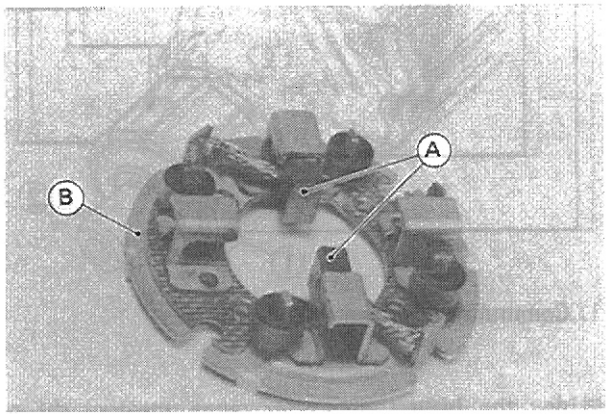

A. Negative Brushes
B. Brush Plate

Assembly

●Note the following.

○Fit the brush plate's notch portion toward the terminal bolt.

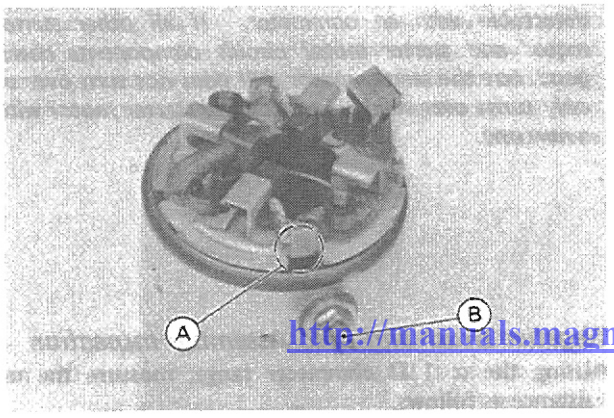

A. Notched Portion
B. Terminal Bolt

○Fit the alignment projection on the brush plate and the groove on the LH end cover.

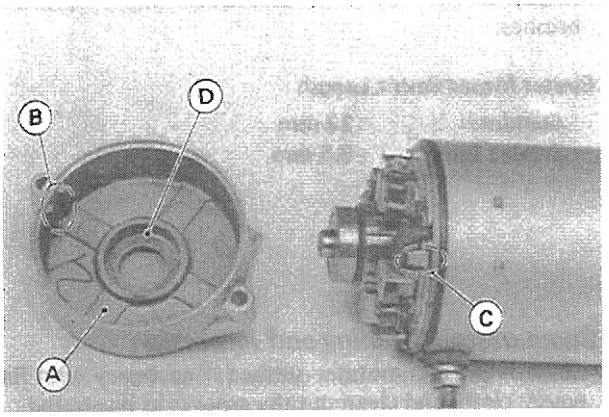

A. End Cover
B. Groove
C. Projection
D. Shims

○Apply thin coat of a grease to the oil seal at the RH end cover.

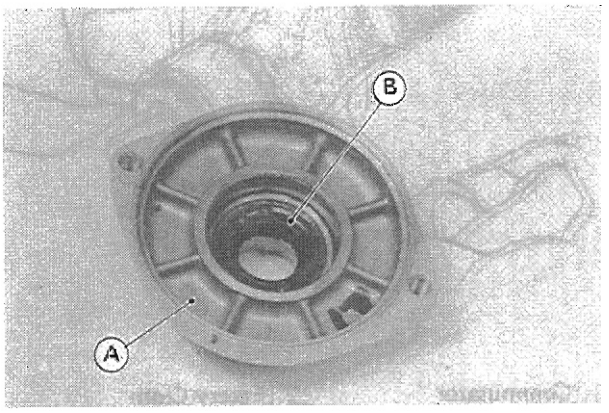

A. End Cover
B. Oil Seal

○Apply a thin coat of grease to the shaft RH bearing.

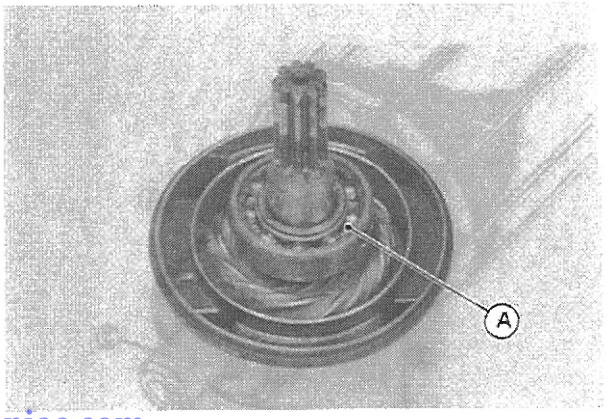

http://manuals.magnamaniac.com

A. Bearing

○Fit shims into the RH end cover.

Brush Inspection

●Measure the length of each brush.
★If any is worn down to the service limit, replace all brushes.

Starter Motor Brush Length

Standard:	**12 mm**
Service Limit:	**8.5 mm**

Commutator Cleaning and Inspection

●Smooth the commutator surface if necessary with fine emery cloth, and clean out the grooves as illustrated.

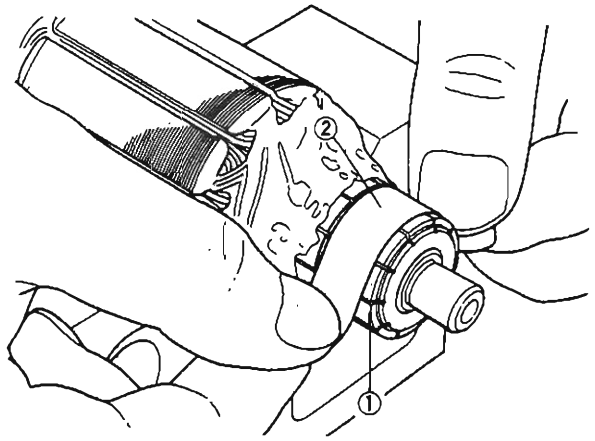

1. Commutator 2. Emery Cloth

●Measure the diameter of the commutator.
★Replace the starter motor with a new one if the commutator diameter is less than the service limit.

Commutator Diameter

Standard:	**28 mm**
Service Limit:	**27 mm**

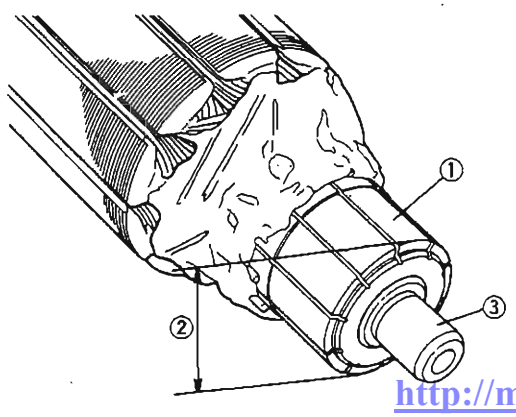

1. Commutator Segment 3. Shaft
2. Diameter

Armature Inspection

●Using the x 1 Ω ohmmeter range, measure the resistance between any two commutator segments.
★If there is a high resistance or no reading (∞) between any two segments, a winding is open and the starter motor must be replaced.

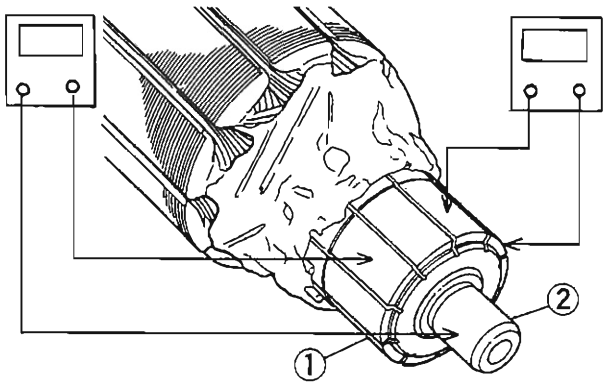

1. Commutator Segment 2. Shaft

●Using the highest ohmmeter range, measure the resistance between the commutator and the shaft.
★If there is any reading at all, the armature has a short and the starter motor must be replaced.

NOTE

○*Even if the foregoing checks show the armature to be good, it may be defective in some manner not readily detectable with an ohmmeter. If all other starter motor and starter motor circuit components check good, but the starter motor still does not turn over or only turns over weakly, replace the starter motor with a new one.*

http://manuals.motorcycle.com/

Negative Brush and Lead Assembly Inspection

●Using the x 1 Ω ohmmeter range, measure the resistance as follows.
○Between the brush and brush plate.
○Between the brush holder and brush plate.

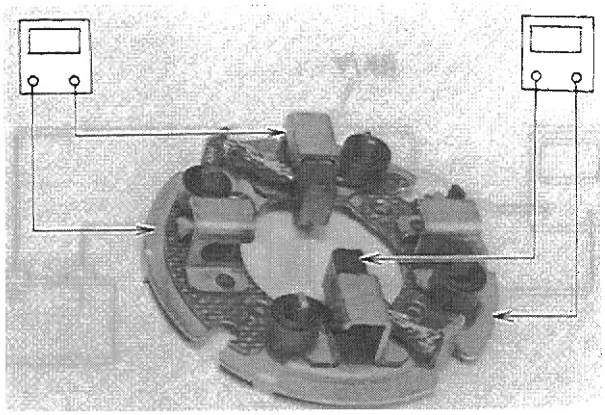

★If there is a high resistance or no reading (∞), a lead is open and the brush and lead assembly must be replaced.

Electric Starter Circuit

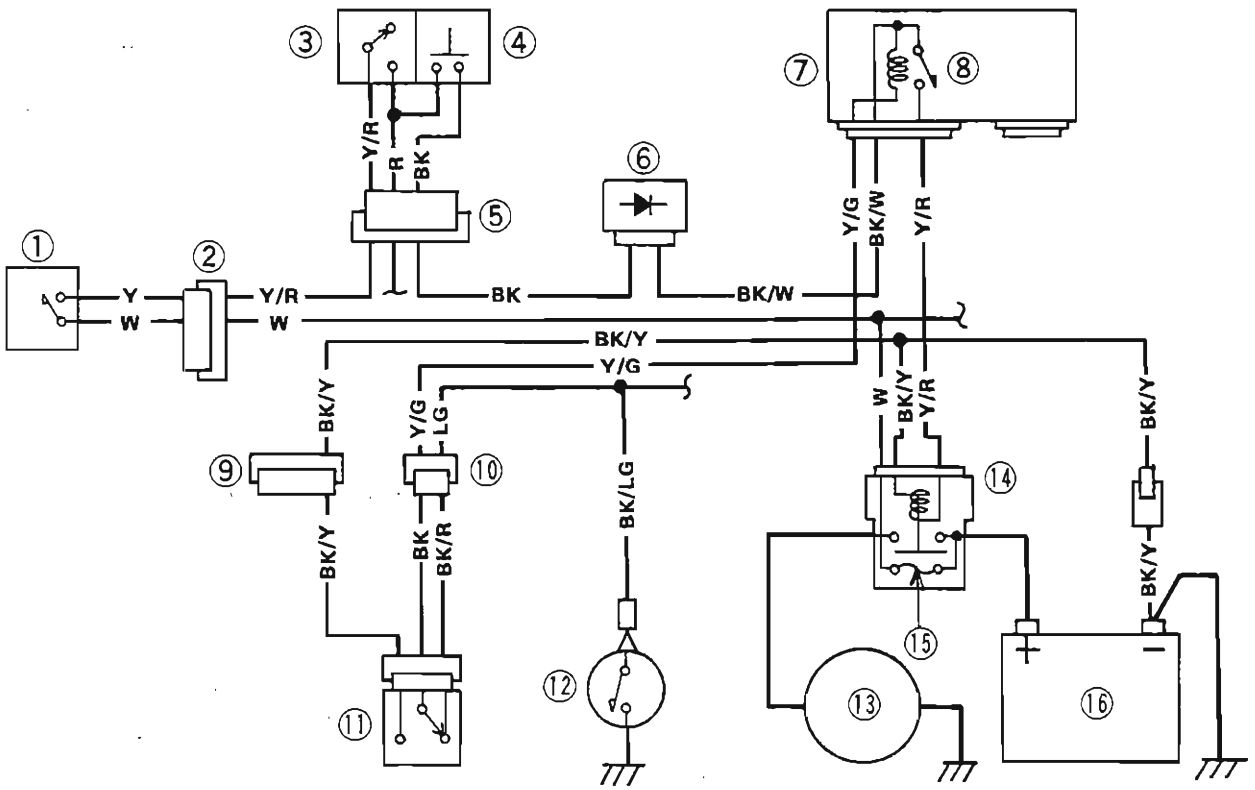

1. Ignition Switch
2. 6-pin Connector
3. Engine Stop Switch
4. Starter Button
5. 6-pin Connector
6. Diode
7. Junction Box
8. Starter Circuit Relay
9. 9-pin Connector
10. 2-pin Connector
11. Starter Lockout Switch
12. Neutral Switch
13. Starter Motor
14. Starter Relay
15. Main Fuse 30A
16. Battery

http://manuals.magnamania.com

Positive Brush and Lead Assembly Inspection

●Using the x 1 Ω ohmmeter range, measure the resistance as follows.

○Between the terminal bolt and the brush plate.

○Between the terminal bolt and the brush.

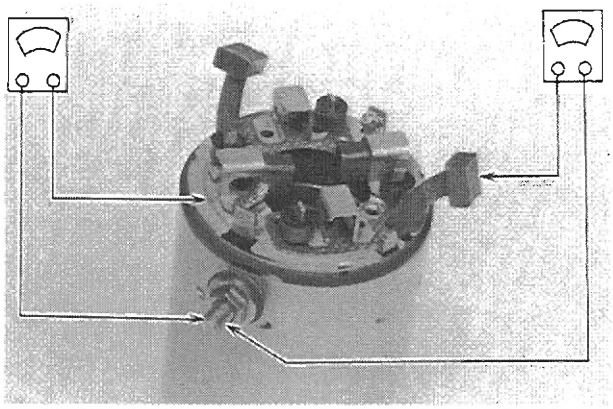

★If the resistance is less than infinite (∞) between the terminal bolt and the brush plate, the positive brush and lead assembly has a short and it must be replaced.

★If there is not close to zero ohms between the terminal bolt and the brush, the positive brush and lead assembly has an open and it must be replaced.

Starter Relay Inspection

●Disconnect the starter motor lead and battery positive (+) lead from the starter relay.

●Disconnect the connector from the stater relay.

CAUTION

○**The battery positive (+) lead with the rubber cap is connected directly to the battery positive (+) terminal even when the ignition switch is off, so take care not to short the removed lead to chassis ground.**

●Connect an ohmmeter and 12 V battery to the starter motor relay as shown.

★If the relay does not work as specified, the relay is defective.

Testing Relay

Meter Range: **x 1 Ω range**

Criteria: **When battery is connected → 0 Ω**

When battery is disconnected → ∞ Ω

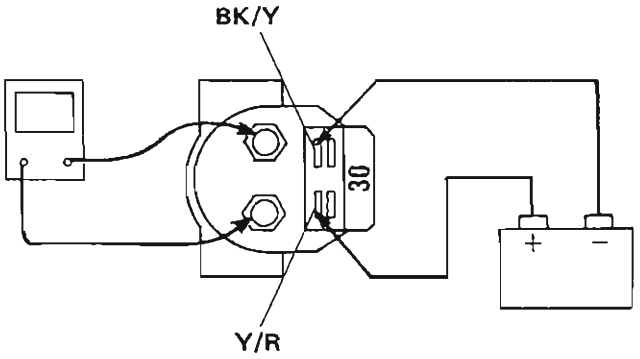

Headlight

Headlight Beam Horizontal Adjustment

●Turn the adjuster on the headlight rim in or out until the beam points straight ahead.

Headlight Beam Vertical Adjustment

●Turn the adjuster on the headlight rim in or out to adjust the headlight vertically.

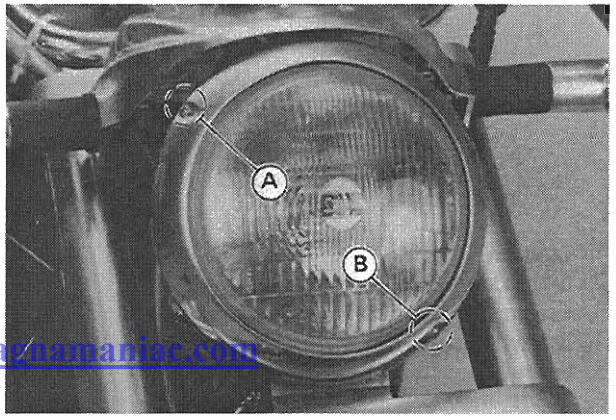

A. Horizontal Adjuster B. Vertical Adjuster

http://manuals.motomaniac.com

NOTE

○On high beam, the brightest point should be slightly below horizontal with the motorcycle on its wheels and the rider seated. Adjust the headlight to the proper angle according to local regulations.

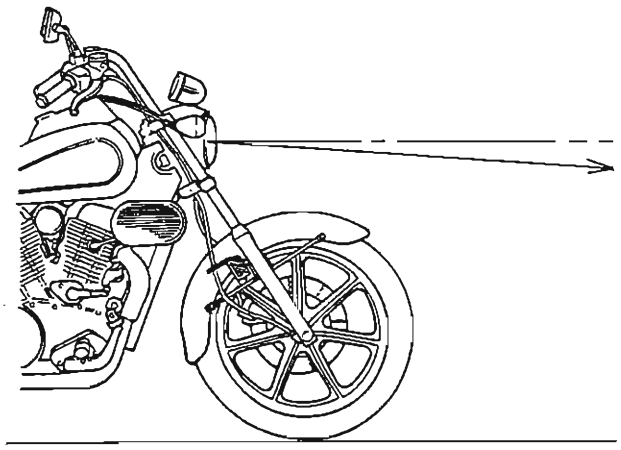

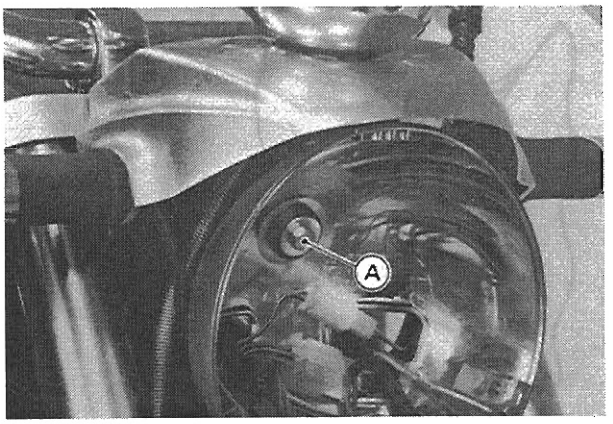

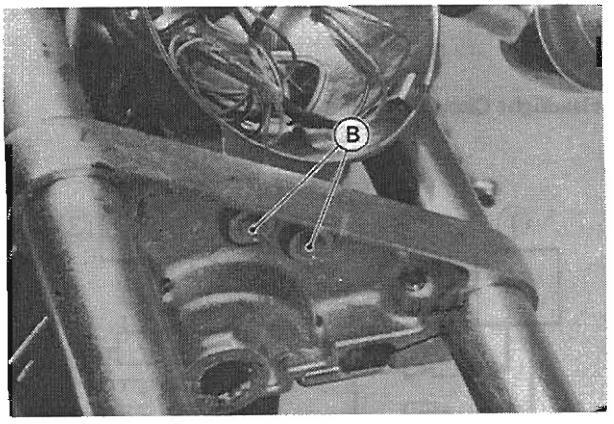

A. Upper Bolt B. Lower Bolts

Removal

●Remove the headlight rim screws and pull the rim out of the headlight unit, and disconnect the wiring connectors.

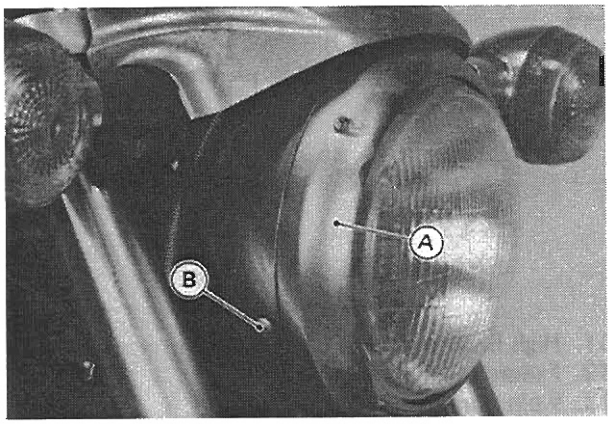

A. Rim B. Screw

http://manuals.magnamaniac.com

●Remove the headlight unit bolts and take off the unit.

Bulb Replacement Notes

CAUTION

○When handling the quartz-halogen bulbs, never touch the glass portion with bare hands. Always use a clean cloth. Oil contamination from hands or dirty rags can reduce bulb life or cause the bulb to explode.

●Fit the dust cover onto the bulb firmly as shown in the figure.

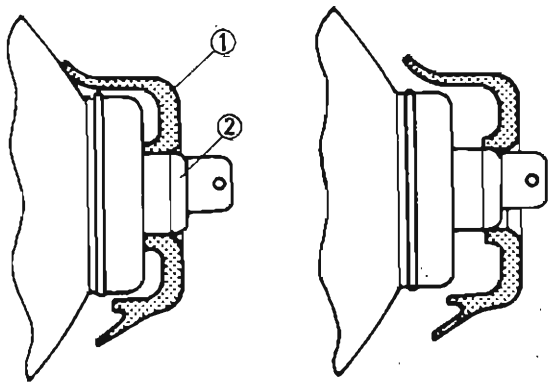

1. Dust Cover
2. Bulb

●After installation, adjust the headlight aim.

Reserve Lighting System Inspection

In this model, the headlight does not go on when the ignition switch is first turned on, but the headlight goes on once the starter button is pushed to start the engine, and stays on until the ignition switch is turned off. But the headlight goes out whenever the starter button is pushed to restart the engine after engine stalling.

★If all wirings and components other than the reserve lighting device check out good, the device is defective.

Headlight Circuit (US and Canada)

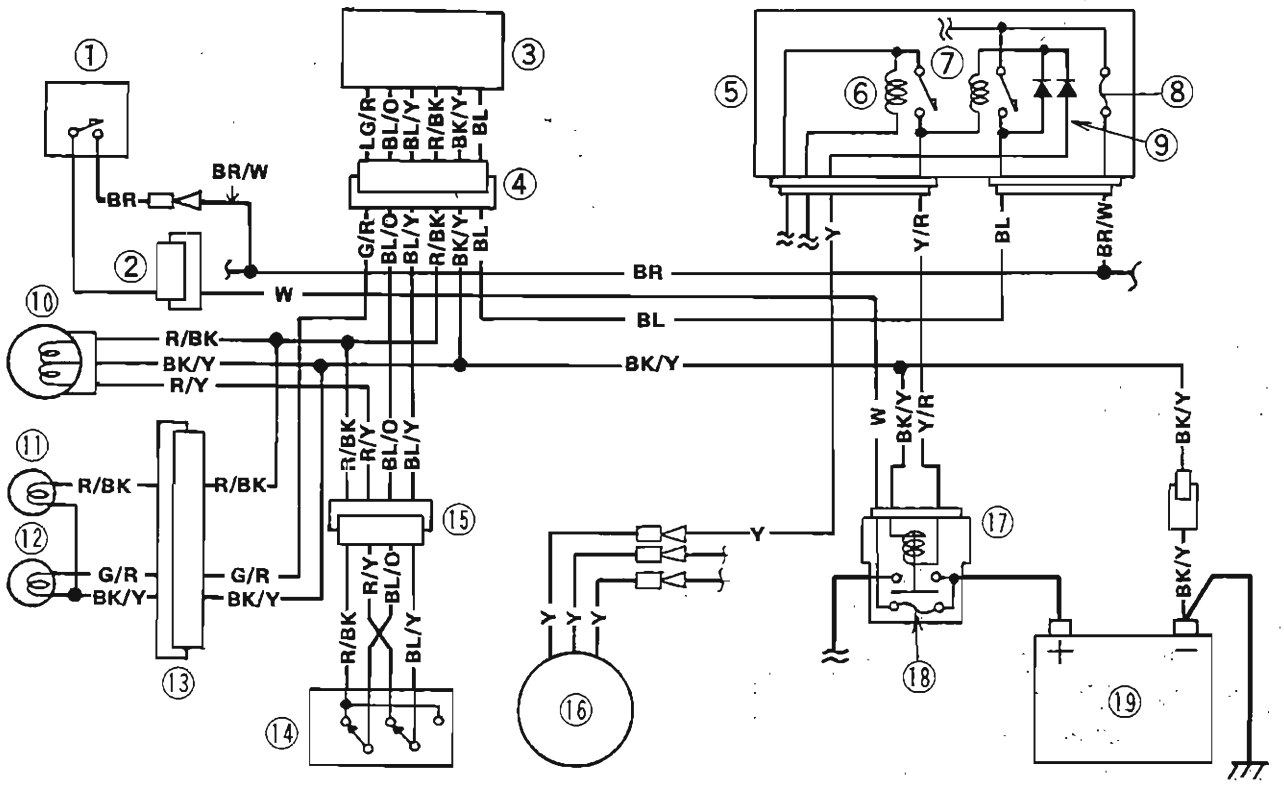

1. Ignition Switch
2. 6-pin Connector
3. Reserve Lighting Device
4. 6-pin Connector
5. Junction Box
6. Starter Circuit Relay
7. Headlight Relay
8. Headlight Fuse 10A
9. Diodes
10. Headlight
11. High Beam Indicator Light
12. Failure Indicator Light
13. 9-pin Connector
14. Dimmer Switch
15. 9-pin Connector
16. Alternator
17. Starter Relay
18. Main Fuse 30A
19. Battery

http://manuals.magnamanac.com

Reserve Lighting System Operation

Headlight	Dimmer Switch Position	Headlight Failure Indicator Light	Reserve Lighting
Both high and low beam filaments are normal	HI	Goes on (hardly visible)	
	LO	Goes on (hardly visible)	
High beam filament burned out	HI	Goes on	Low beam comes on.
	LO	Goes on (hardly visible)	
Low beam filament burned out	HI	Goes on (hardly visible)	
	LO	Goes on	High beam comes on dimly.

Fuel Pump

The fuel pump does not operate when the ignition switch is turned on alone. The pump operates when the starter button is pushed on or the engine is running.

When fuel level in the float chamber is low, the fuel pump operates to supply fuel into the float chamber.

When the fuel reaches a certain level, the fuel pressure rises, and stop fuel pump.

Fuel Pump Circuit

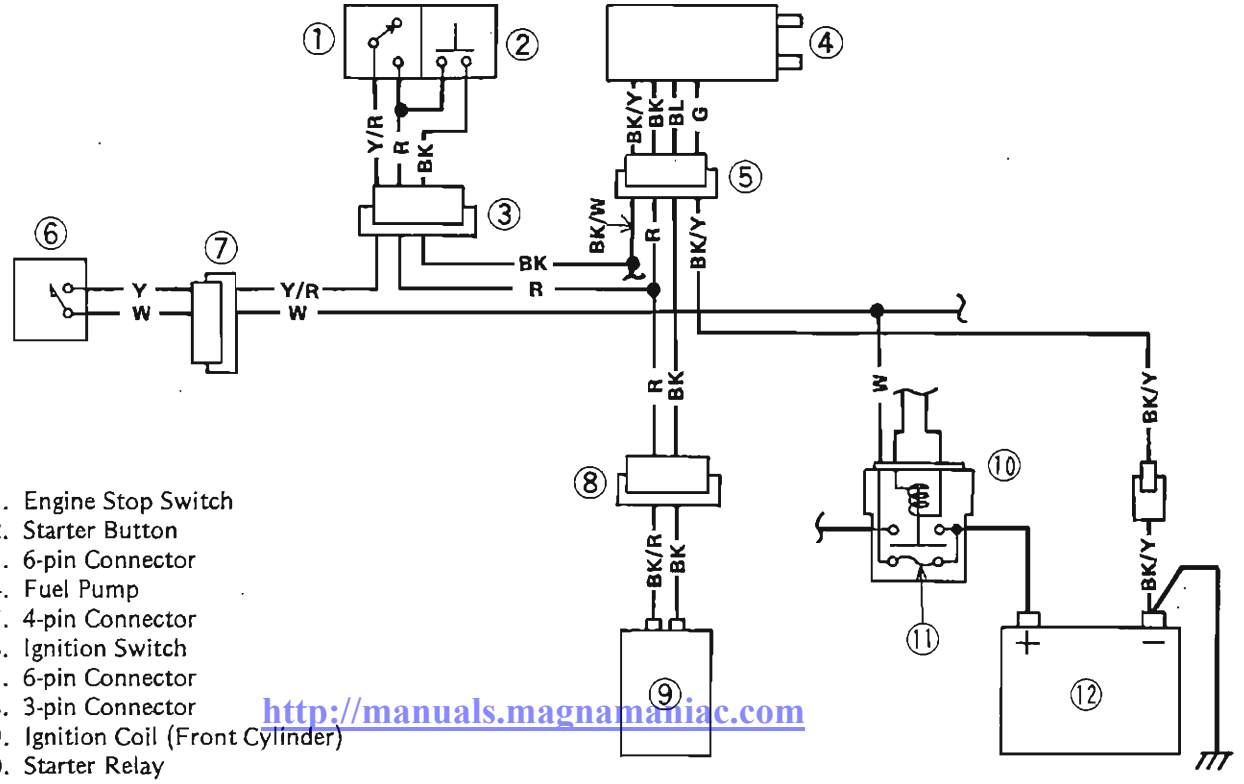

1. Engine Stop Switch
2. Starter Button
3. 6-pin Connector
4. Fuel Pump
5. 4-pin Connector
6. Ignition Switch
7. 6-pin Connector
8. 3-pin Connector
9. Ignition Coil (Front Cylinder)
10. Starter Relay
11. Main Fuse 30A
12. Battery

http://manuals.magnamaniac.com

Internal Resistance

●Set the ohmmeter to the x 1 kΩ range and make the measurements shown in the table.
★If the meter readings are not as specified, replace the fuel pump.

Fuel Pump Internal Resistance

		Tester (+) Lead Connection		
		BK	BL	BK/Y
Tester (–) Lead Connection	BK		∞	∞
	BL	∞		∞
	BK/Y	∞	More than 20 kΩ	

Operates Check

●Remove the fuel pump with fuel filter.
●Prepare a container filled with kerosene.
●Prepare the rubber hoses, and connect them to the pump fittings.
●Connect the suitable pressure gauge to the outlet hose as shown.

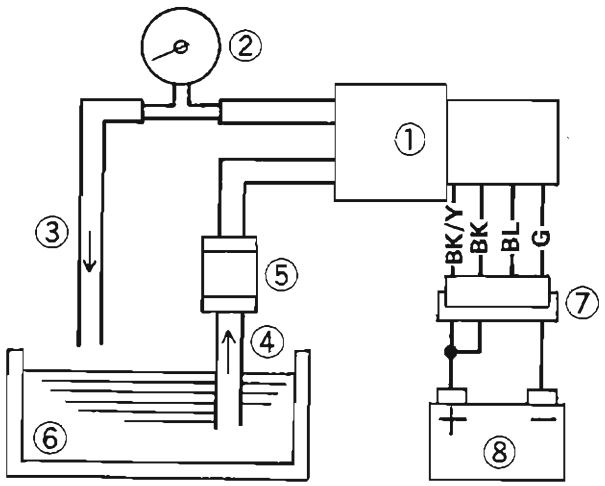

1. Fuel Pump
2. Pressure Gauge
3. Outlet Hose
4. Inlet Hose
5. Fuel Filter
6. Kerosene
7. 4-pin Connector
8. Battery

●Prepare the 4-pin connector with wires, and connect it into the pump wire connector.
●Connect the battery + wire to the Black/Yellow and Black wires, then battery – wire to the green wire at the pump connector.
★If the pump does not operate, the pump is defective.
●Close the outlet hose while operating the fuel pump.
●When the pump is stopped, read the pressure gauge.
★If the pressure gauge reading out of the specified pressure, the pump is defective.

Fuel Pump Pressure

Standard: 11 – 16 kPa
(0.11 – 0.16 kg/cm², 1.6 – 2.3 psi)

Cooling Fan System

Fan System Circuit Inspection

●Ground the red/white wire to the engine with a suitable wire.
★If the fan turns, inspect the following.
Switches (Fan Switch)
★If the fan does not turn, inspect the following.
Wires and Connectors
Junction Box Parts (Fan Relay and Fan Fuse)
Main Fuse
Fan

Fan Inspection

●Disconnect the 2-pin connector in the fan leads.
●Using two auxiliary wires, supply battery power to the fan.
★If the fan does not turn at this time, the fan is defective and must be replaced.

http://manuals.magnamaniac.com

Fan Relay Inspection

Refer to the Starter Circuit, and Headlight Relay Inspection in the Junction Box section.

Cooling Fan Circuit

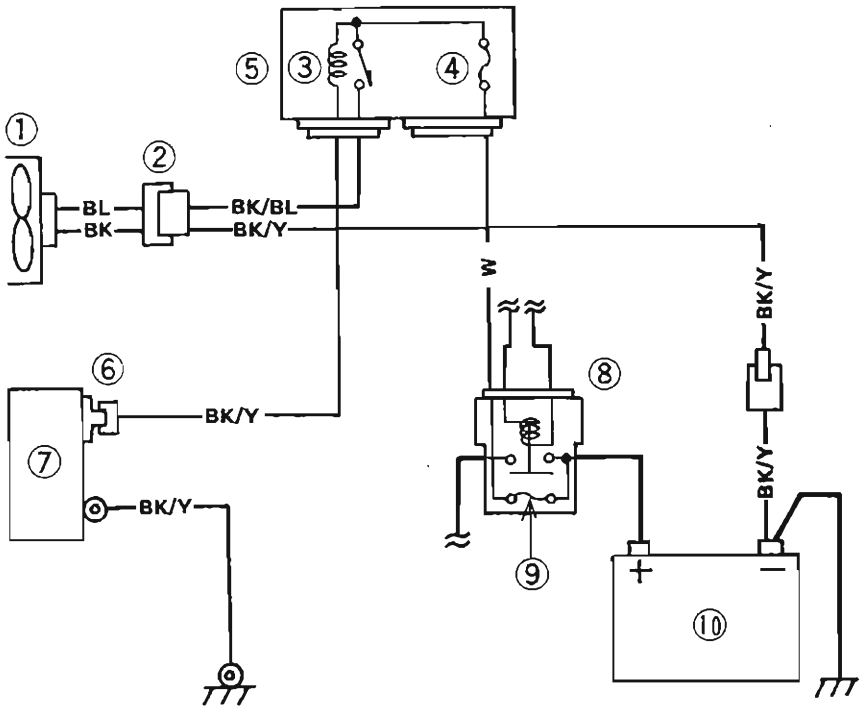

1. Cooling Fan
2. 2-pin Connector
3. Fan Relay
4. Fan Fuse 10A
5. Junction Box
6. Fan Switch
7. Radiator
8. Starter Relay
9. Main Fuse 30A
10. Battery

Meter, Gauge

Speedometer Removal

- Remove the headlight unit.
- Remove the speedometer cable upper end.
- Remove the speedometer bolts and lift the meter off the headlight cover.

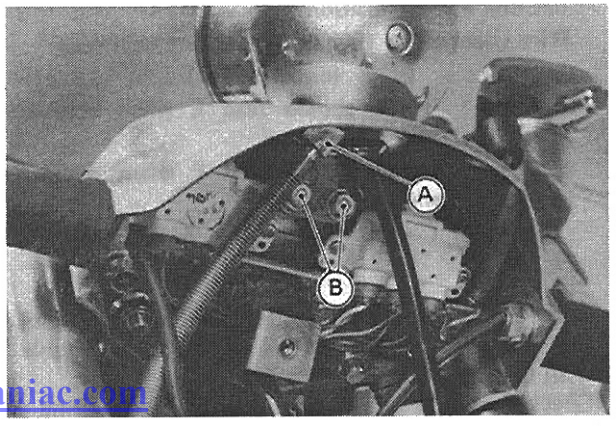

A. Speedometer Cable Upper End
B. Speedometer Bolts

http://manuals.magnamaniac.com

Bulb Replacement (Meter and Indicator Lights)

●Note the following.

○To remove the wedge-base type bulb pull the bulb out of the socket.

CAUTION

○Do not use bulb rated for greater wattage than the specified valve.

○Do not turn the bulb to prevent damage to the bulb.

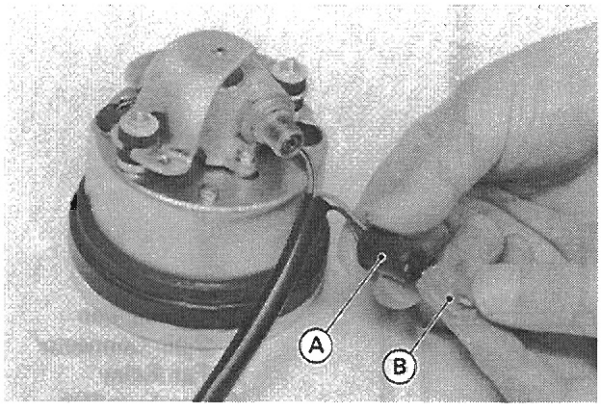

A. Bulb Sockets B. Bulb

Fuel Gauge Operation Inspection (VN1500-A)

●Prepare an auxiliary wire, and check the operation of the gauge.

Fuel Gauge Operation Check

Ignition Switch Position: ON

Wire Location: Female 2-pin sensor connector (disconnected)

Results: Gauge should read E when connector wires are opened.

Gauge should read F when connector wires are shorted.

★If the gauge readings are correct, the fuel level sensor is bad. If these readings are not obtained, the trouble is with the gauge and/or wiring.

●Check the fuel gauge circuit wiring (see Wiring Inspection).

★If all wiring and components other than the fuel gauge unit check out good the gauge is defective.

Fuel Level Sensor Inspection (VN1500-A)

●Check that the float moves up and down smoothly without binding. It should go down under its own weight.

★If the float does not move smoothly, replace the sensor.

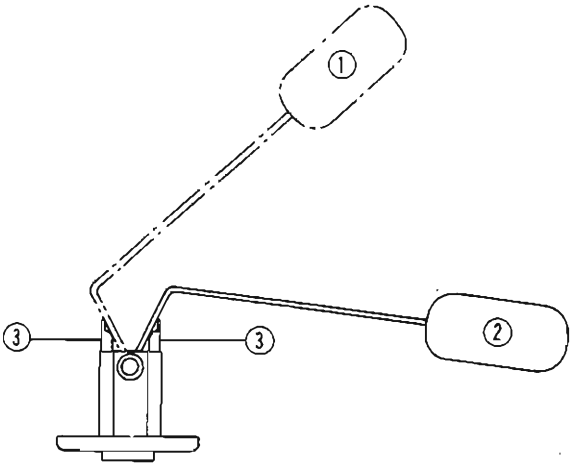

1. Float in full position
2. Float in empty position
3. Float arm stop

●Measure the resistance of the fuel level sensor with an ohmmeter.

★If the ohmmeter does not show the specified values, or the readings do not change smoothly as the float moves up and down, replace the sensor.

Fuel Level Sensor Resistance

Full Position: 4 – 10 Ω

Empty Position: 90 – 100 Ω

http://manuals.magnamaniac.com

●Inspect the leads and 2-pin connector.

★If they show any signs of damage, replace the sensor.

Fuel Gauge Circuit (VN1500-A1)

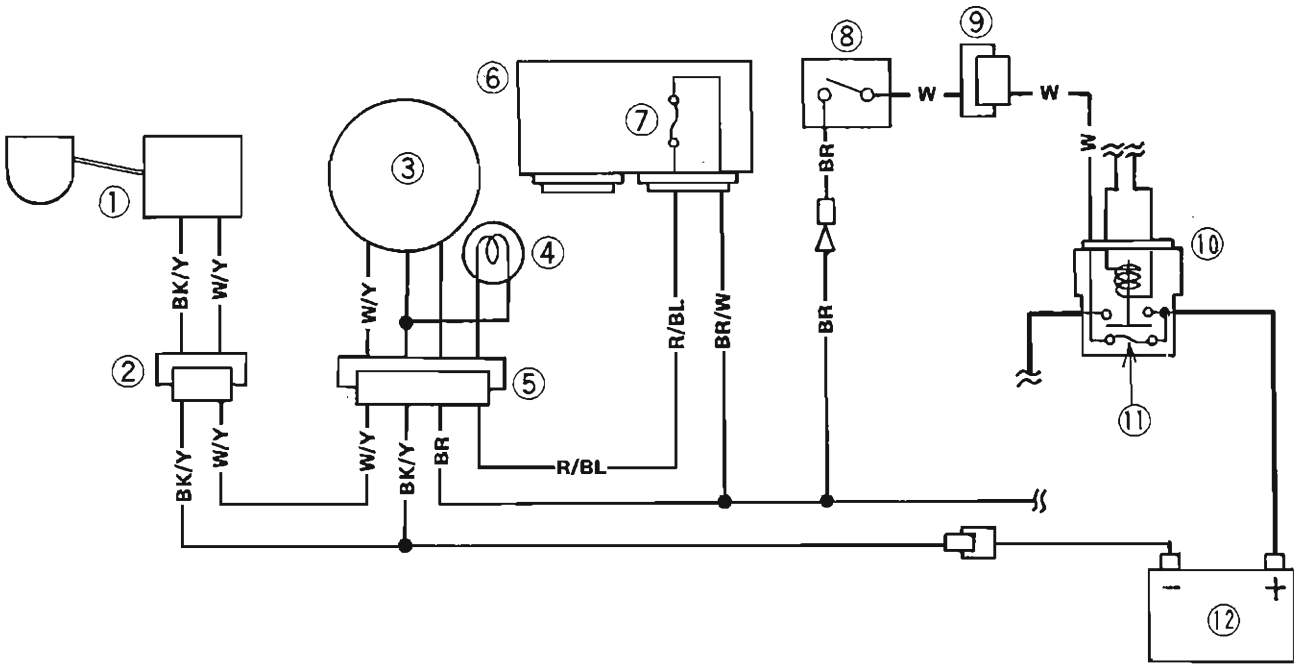

1. Fuel Level Sensor
2. 2-pin Connector
3. Fuel Gauge
4. Meter Light
5. 4-pin Connector
6. Junction Box
7. Taillight Fuse 10A
8. Ignition Switch
9. 6-pin Connector
10. Starter Relay
11. Main Fuse 30A
12. Battery

Switches and Sensors

Rear Brake Light Switch Adjustment

●Check the operation of the rear brake light switch by depressing the brake pedal. The brake light should go on after about 15 mm of pedal travel.

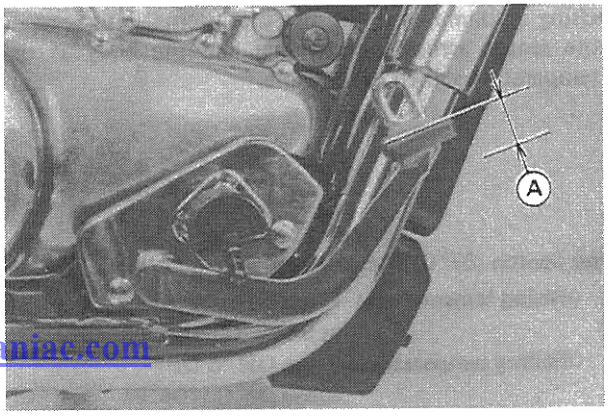

A. Brake Pedal B. 15 mm

http://manuals.magnamaniac.com

★If it does not, adjust the brake light switch.
●Loosen the right footpeg bracket cover mounting bolts.
●Pull the footpeg bracket toward the right a little.
●Turn the adjusting nut to adjust the switch.

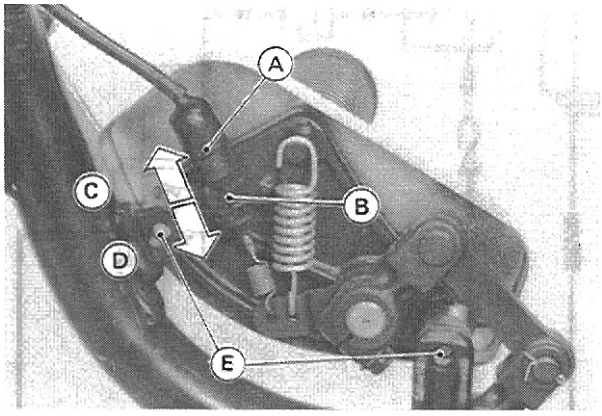

A. Switch
B. Adjusting Nut
C. Light sooner.
D. Light later.
E. Cover Mounting Bolts

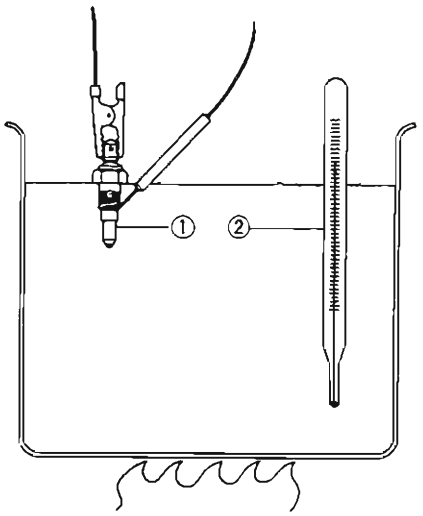

1. Fan Switch
2. Thermometer

CAUTION

○**To avoid damaging the electrical connections inside the switch, be sure that the switch body does not turn during adjustment.**

★If the ohmmeter does not show the specified values, replace the switch.

Fan Switch Inspection

●Suspend the switch in a container of water so that the temperature sensing projection and threaded portion are submerged.
●Using an ohmmeter, measure the internal resistance of the sensor across the terminal and the body at the temperature shown in the table.

Fan Switch (97°C) Connections

○**Rising temperature: From OFF to ON at 94 – 100°C (201 – 212°F)**
○**Falling temperature: From ON to OFF above 90°C (194°F)**
ON: Less than 0.5 Ω
OFF: More than 1 MΩ

Junction Box and Main Fuse

The junction box has fuses, relays and diodes. The relays and diodes can not be removed.
The main fuse is installed onto the starter relay.

http://manuals.magnamaniac.com

Fuse Removal (Junction Box)

●Unlock the hook to lift up the locking arm.
●Pull the fuses straight out of the junction box with needle nose pliers.

Fuse Installation

★If a fuse fails during operation, inspect the electrical system to determine the cause, and then replace it with a new fuse of proper amperage.

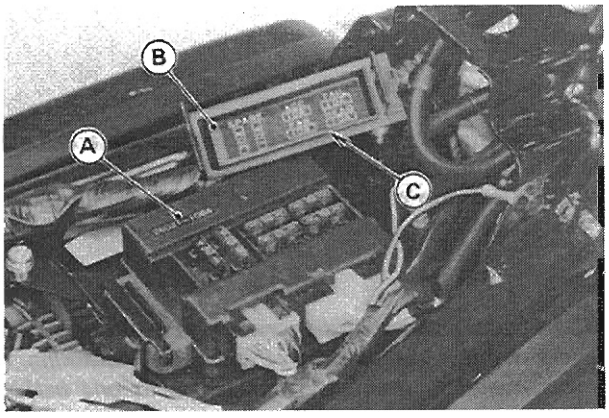

A. Junction Box
B. Fuse Cover
C. Label

Main Fuse Removal

●Remove the connector from the starter relay and pull the main fuse out of the relay with needle nose pliers.

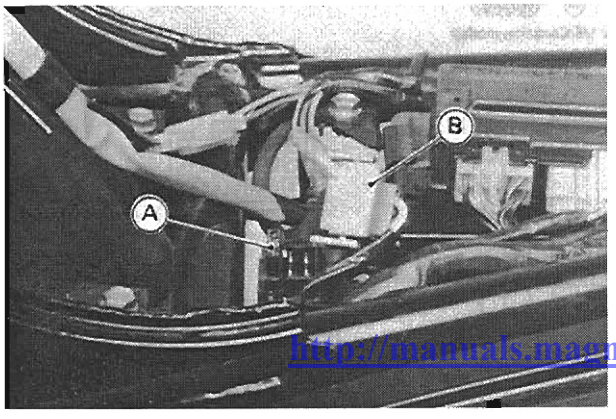

A. Main Fuse
B. Connector

Fuse Inspection

●Inspect the fuse element.

★If it is blown out, replace the fuse. Before replacing a blown fuse, always check the amperage in the affected circuit. If the amperage is equal to or greater than the fuse rating, check the wiring and related components for a short circuit.

CAUTION

○**When replacing a fuse, be sure the new fuse matches the specified fuse rating for that circuit. Installation of a fuse with a higher rating may cause damage to wiring and components.**

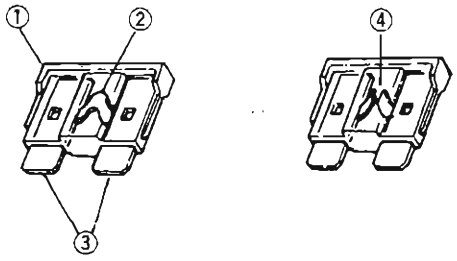

1. Housing
2. Fuse Element
3. Terminals
4. Blown Element

Junction Box Fuse Circuit Inspection

●Remove the junction box from the motorcycle.

●Pull off the connectors from the junction box.

●Make sure all connector terminals are clean and tight, and none of them have been bent.

★Clean the dirty terminals and, straighten slightly-bent terminals.

●Check conductivity of the numbered terminals with hand tester.

★If the meter does not read as specified, replace the junction box.

Fuse Circuit Inspection

METER CONNECTION	METER READING (Ω)
1−2	0
1−3B	0
3A−4	0
6−5	0
6−7	0
6−10	0
6−17	0
1−7	∞
1−3A	∞
3A−8	∞
8−17	∞

Fan, Starter Circuit and Headlight Relay Inspection

http://manuals.magnamaniac.com

●Remove the junction box from the motorcycle.

●Check conductivity of the following numbered terminals by connecting an ohmmeter and one 12 V battery to the junction box as shown.

★If the relay does not work as specified, then replace the junction box.

Relay Circuit Inspection (with the battery disconnected)

	METER CONNECTION	METER READING (Ω)
FAN RELAY	2−5	∞
	4−5	∞
	**	∞
		∞
HEADLIGHT RELAY	*7−8	∞
	*7−13	∞
STARTER RELAY	11−13	∞
	12−13	∞

**VN1500-A9~

Relay Circuit Inspection (with the battery connected)

	METER CONNECTION	BATTERY CONNECTION + −	METER READING (Ω)
FAN	2−5	2−4	0
HEADLIGHT	*7−8	9−13	0
STARTER	11−13	11−12	0

* US / CANADA MODEL ONLY

** VN1500-A9~

Diode Circuit Inspection

- Remove the junction box from the motorcycle.
- Pull off the connectors from the junction box.
- Check conductivity of the following pair of terminals.

Terminals for Diode Circuit Inspection

****11-12, *13-8, *13-9, 12-14, 15-14, 16-14**

* US/Canada Model Only

** VN1500-A9~

★The resistance should be low in one direction and more than ten times as much in the other direction. If any diode shows low or high in both directions, the diode is defective and the diode assembly must be replaced.

NOTE

○*The actual meter reading varies with the meter used and the individual diode, but, generally speaking, the lower reading should be from zero to one half the scale.*

Junction Box Internal Circuit

VN1500-A1~A8/B1~B6 (US AND CANADA)

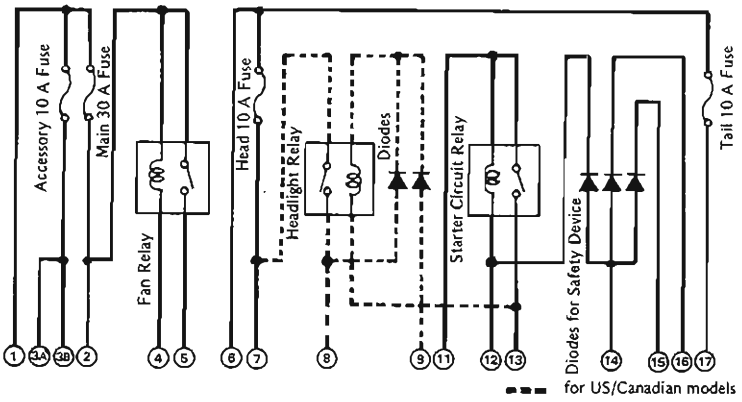

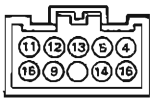

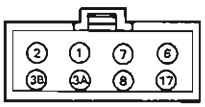

VN1500-A9~ (US AND CANADA)

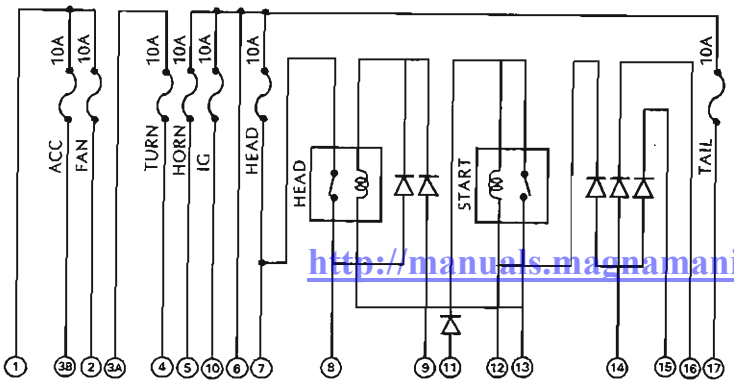

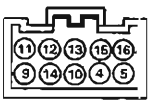

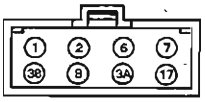

http://manuals.magnamaniac.com

VN1500-A2~A8 / B2~B6 Wiring Diagram (Other than US and Canada)

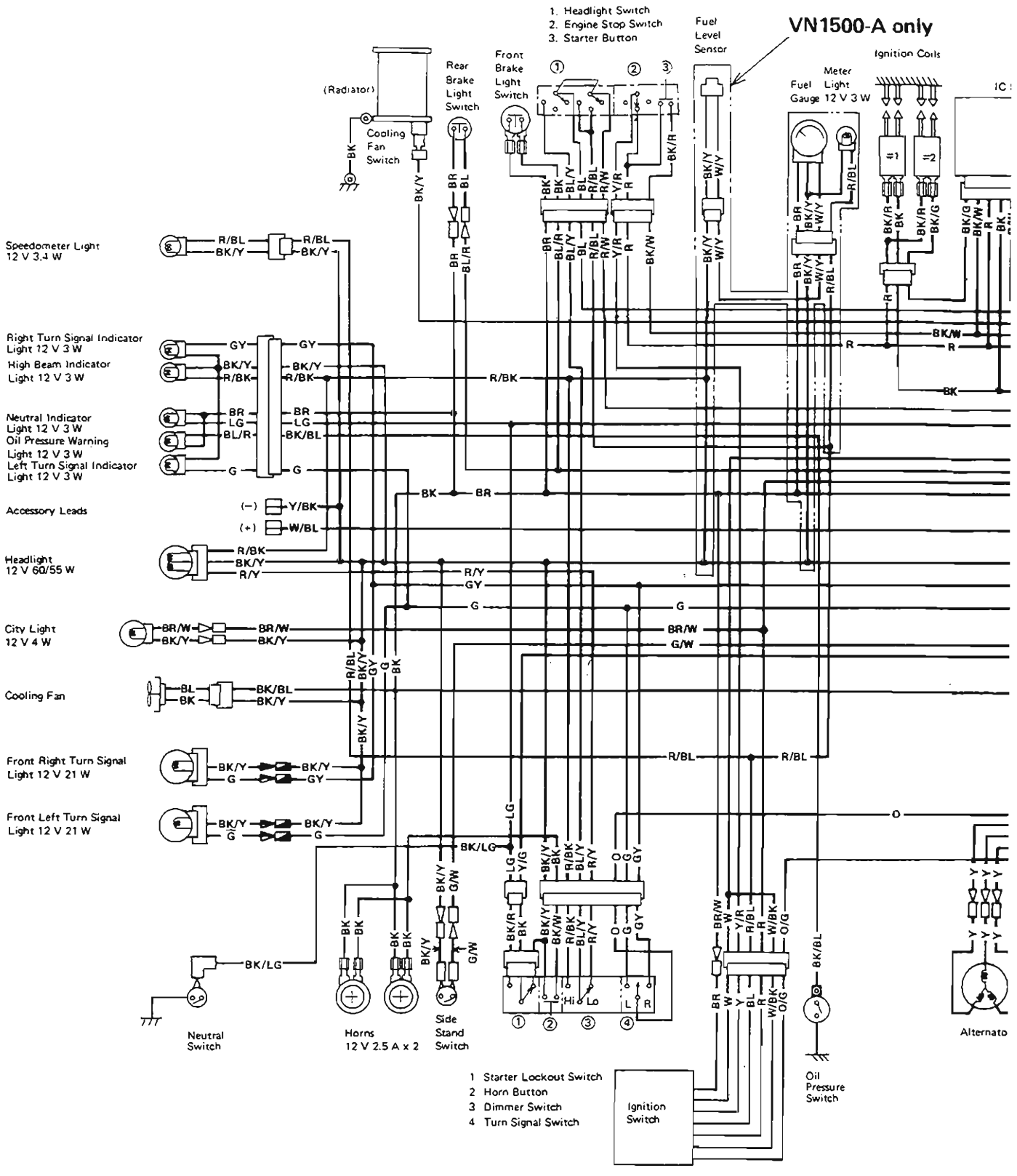

LEFT HANDLEBAR SWITCH CONNECTIONS

Turn Signal Switch				Dimmer Switch				Starter Lockout Switch			
Color	G	O	GY	Color	R/BK	BL/Y	R/Y	Color	BK/Y	BK	BK/R
L	○—○			HI	○—○			Released		○—○	
N											
R		○—○		LO		○—○		Pulled in	○—○		

http://manuals.magnamotors.com

IGNITION SWITCH

	Ignition	Battery 1	Ignition
Color	BR	W	Y
OFF,LOCK			
ON	○—○	○—○	○—○
P(PARK)		○—○	

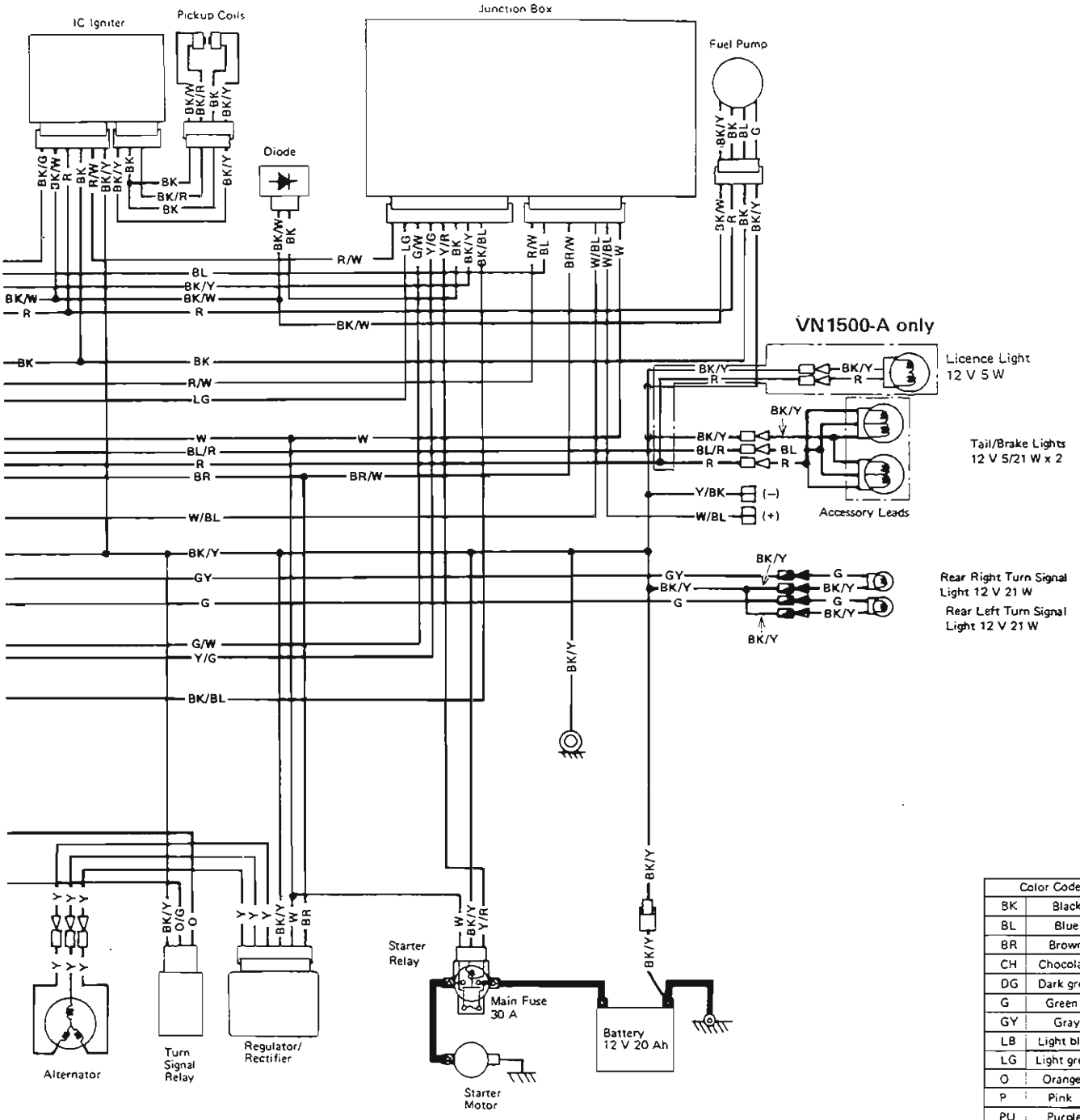

Color Code	
BK	Black
BL	Blue
BR	Brown
CH	Chocolate
DG	Dark green
G	Green
GY	Gray
LB	Light blue
LG	Light green
O	Orange
P	Pink
PU	Purple
R	Red
W	White
Y	Yellow

ON SWITCH CONNECTIONS

1	Ignition	Tail 1	Tail 2	Battery 2	Tail 3
	Y	BL	R	W/BK	O/G

RIGHT HANDLEBAR SWITCH CONNECTIONS

Engine Stop Switch			Headlight Switch					Starter Button		
Color	Y/R	R	Color	R/W	R/BL	BL	BK/Y	Color	R	BK
OFF			OFF							
			O							
RUN			ON					Push		

https://manuals.magnamania.com

(98051-1089A, 1092A)

VN1500-A9~ Wiring Diagram (US and Canada)

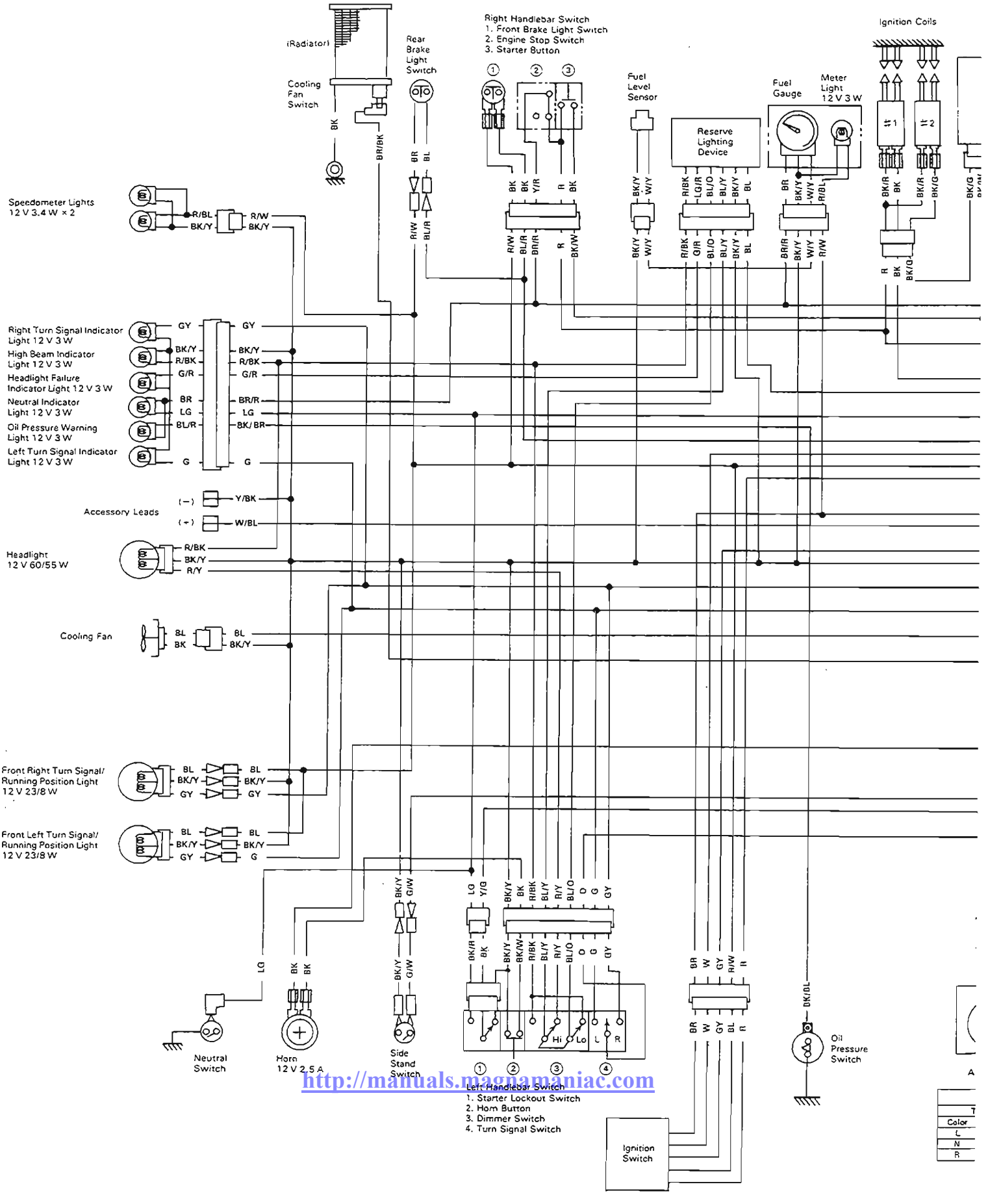

http://manuals.magnamaniac.com

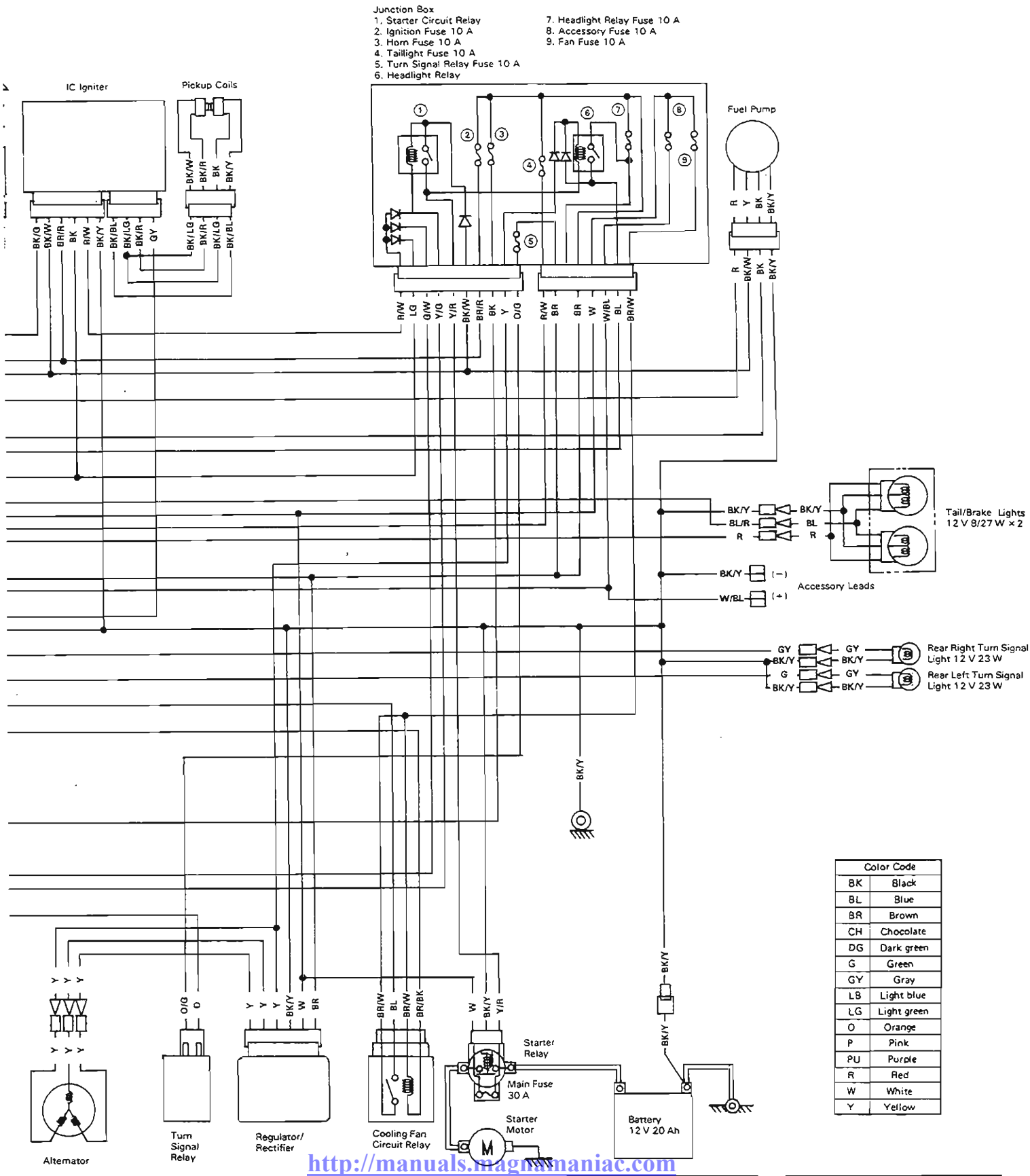

Color Code	
BK	Black
BL	Blue
BR	Brown
CH	Chocolate
DG	Dark green
G	Green
GY	Gray
LB	Light blue
LG	Light green
O	Orange
P	Pink
PU	Purple
R	Red
W	White
Y	Yellow

LEFT HANDLEBAR SWITCH CONNECTIONS

Turn Signal Switch			
Color	G	O	GY
L	○		○
N			
R		○	○

Dimmer Switch				
Color	R/BK	BL/Y	R/Y	BL/O
HI	○		○	
LO		○	○	○

Starter Lockout Switch			
Color	BK/Y	Y/G	BK/R
Released		○	○
Pulled in	○		

IGNITION SWITCH CONNECTIONS

	Ignition	Battery 1	Ignition	Tail 1	Tail 2
Color	BR	W	GY	BL	R
OFF,LOCK					
ON	○	○	○	○	
P(PARK)		○			

RIGHT HANDLEBAR SWITCH CONNECTIONS

Engine Stop Switch			Starter Button		
Color	Y/R	R	Color	R	BK
OFF					
RUN	○		Push	○	

http://manuals.magnamaniac.com

Appendix

Table of Contents

Additional Considerations for Racing 16-2
Carburetor 16-2
Spark Plug 16-2
Spark Plug Inspection 16-2
Troubleshooting Guide 16-4
General Lubrication 16-8
Lubrication 16-8
Nut, Bolt, and Fastener Tightness 16-8
Tightness Inspection 16-8
Unit Conversion Table 16-9

http://manuals.magnamaniac.com

Additional Considerations for Racing

This motorcycle has been manufactured for use in a reasonable and prudent manner and as a vehicle only. However, some may wish to subject this motorcycle to abnormal operation, such as would be experienced under racing conditions. KAWASAKI STRONGLY RECOMMENDS THAT ALL RIDERS RIDE SAFELY AND OBEY ALL LAWS AND REGULATIONS CONCERNING THEIR MOTORCYCLE AND ITS OPERATION.

Racing should be done under supervised conditions, and recognized sanctioning bodies should be contacted for further details. For those who desire to participate in competitive racing or related use, the following technical information may prove useful. However, please note the following important points.

- You are entirely responsible for the use of your motorcycle under abnormal conditions such as racing, and Kawasaki shall not be liable for any damages which might arise from such use.
- Kawasaki's Limited Motorcycle Warranty and Limited Emission Control Systems Warranty specifically exclude motorcycles which are used in competitive or related uses. Please read the warranty carefully.
- Motorcycle racing is a very sophisticated sport, subject to many variables. The following information is theoretical only, and Kawasaki shall not be liable for any damages which might arise from alterations utilizing this information.
- When the motorcycle is operated on public roads, it **must** be in its original state in order to ensure safety and compliance with applicable regulations.

Carburetor:

Sometimes an alteration may be desirable for improved performance under special conditions when proper mixture is not obtained after the carburetor has been properly adjusted, and all parts cleaned and found to be functioning properly.

If the engine still exhibits symptoms of overly lean carburetion after all maintenance and adjustments are correctly performed, the main jet can be replaced with a smaller or larger one. A smaller numbered jet gives a leaner mixture and a larger numbered jet a richer mixture.

Spark Plug:

The spark plug ignites the fuel/air mixture in the combustion chamber. To do this effectively and at the proper time, the correct spark plug must be used, and the spark plug must be kept clean and adjusted.

Test have shown the plug listed in the "Electrical System" chapter to be the best plug for general use.

Since spark plug requirements change with the ignition and carburetion adjustments and with riding conditions, whether or not a spark plug of a correct heat range is used should be determined by removing and inspecting the plug.

When a plug of the correct heat range is being used, the electrodes will stay hot enough to keep all the carbon burned off, but cool enough to keep from damaging the engine and the plug itself. This temperature is about 400 – 800°C (750 – 1,450°F) and can be judged by noting the condition and color of the ceramic insulator around the center electrode. If the ceramic is clean and of a light brown color, the plug is operating at the right temperature.

A spark plug for higher operating temperatures is used for racing. Such a plug is designed for better cooling efficiency so that it will not overheat and thus is often called a "colder" plug. If a spark plug with too high a heat range is used – that is, a "cold" plug that cools itself too well – the plug will stay too cool to burn off the carbon, and the carbon will correct on the electrodes and the ceramic insulator.

The carbon on the electrodes conducts electricity, and can short the center electrode to ground by either coating the ceramic insulator or bridging across the gap. Such a short will prevent an effective spark. Carbon buildup on the plug can also cause other troubles. It can heat up redhot and cause preignition and knocking, which may eventually burn a hole in the top of the piston.

Spark Plug

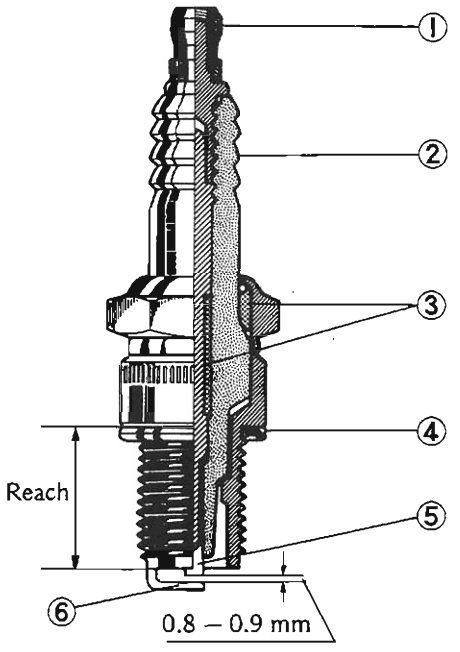

1. Terminal
2. Insulator
3. Cement
4. Gasket
5. Center Electrode
6. Side Electrode

http://manuals.magnamaniac.com

Spark Plug Inspection

- Remove the spark plug and inspect the ceramic insulator.

Spark Plug Condition

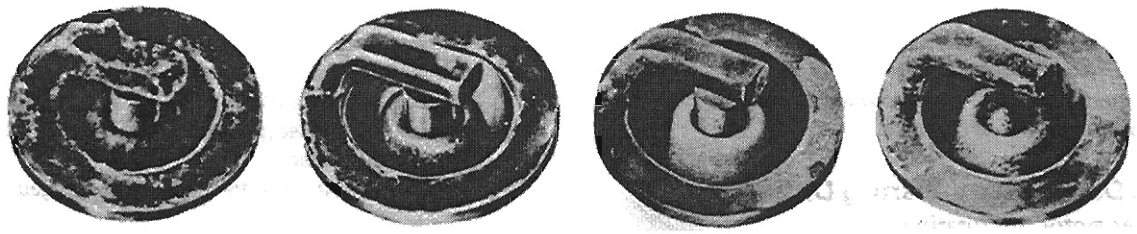

Carbon Fouling | Oil Fouling | Normal Operation | Overheating

★Whether or not the right temperature plug is being used can be ascertained by noting the condition of the ceramic insulator around the electrode. A light brown color indicates the correct plug is being used. If the ceramic is white, the plug is operating at too high a temperature and it should be replaced with the next colder type.

CAUTION

- **If the spark plug is replaced with a type other than the standard plug, make certain the replacement plug has the same thread pitch and reach (length of threaded portion) and the same insulator type (regular type or projected type) as the standard plug.**
- **If the plug reach is too short, carbon will build up on the plug hole threads in the cylinder head, causing overheating and making it very difficult to insert the correct spark plug later.**
- **If the reach is too long, carbon will build up on the exposed spark plug threads causing overheating, preignition, and possibly burning a hole in the piston top. In addition, it may be impossible to remove the plug without damaging the cylinder head.**

Standard Spark Plug Threads

Diameter: 12 mm
Pitch: 1.25 mm
Reach: 19.0 mm

NOTE

- *The heat range of the spark plug functions like a thermostat for the engine. Using the wrong type of spark plug can make the engine run too hot (resulting in engine damage) or too cold (with poor performance, misfiring, and stalling).*

Plug Reach

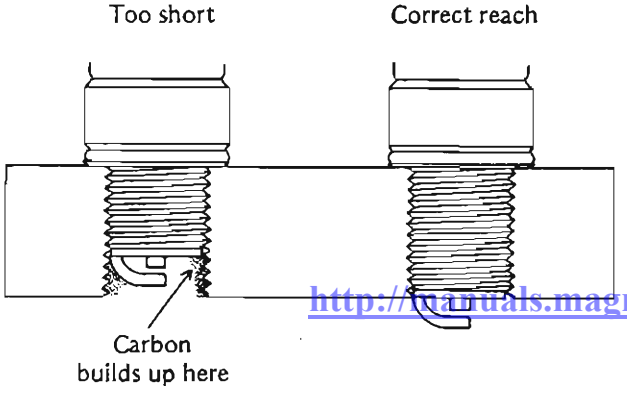

http://manuals.magnamaniac.com

Troubleshooting Guide

NOTE

○*This is not an exhaustive list, giving every possible cause for each problem listed. It is meant simply as a rough guide to assist the troubleshooting for some of the more common difficulties.*

Engine Doesn't Start, Starting Difficulty:

Starter motor not rotating:
- Starter lockout or neutral switch trouble
- Starter motor trouble
- Battery voltage low
- Relays not contacting or operating
- Starter button not contacting
- Wiring open or shorted
- Ignition switch trouble
- Engine stop switch trouble
- Fuse blown

Starter motor rotating but engine doesn't turn over:
- Starter motor clutch trouble

Engine won't turn over:
- Valve seizure
- Rocker arm seizure
- Cylinder, piston seizure
- Crankshaft seizure
- Connecting rod small end seizure
- Connecting rod big end seizure
- Transmission gear or bearing seizure
- Camshaft seizure
- Balancer bearing seizure

No fuel flow:
- Fuel tank air vent obstructed
- Fuel pump trouble
- Fuel tap clogged
- Fuel line clogged
- Float valve clogged

Engine flooded:
- Fuel level in carburetor float bowl too high
- Float valve worn or stuck open
- Starting technique faulty
- (When flooded, crank the engine with the throttle fully open to allow more air to reach the engine.)

No spark; spark weak:
- Battery voltage low
- Spark plug dirty, broken, or maladjusted
- Spark plug cap or high tension wiring trouble
- Spark plug cap not in good contact
- Spark plug incorrect
- IC igniter trouble
- Neutral, starter lockout, or side stand switch trouble
- Pickup coil trouble
- Ignition coil trouble
- Ignition or engine stop switch shorted
- Wiring shorted or open
- Fuse blown

Compression Low:
- Spark plug loose
- Cylinder head not sufficiently tightened down
- Cylinder, piston worn
- Piston ring bad (worn, weak broken, or sticking)
- Piston ring/groove clearance excessive
- Cylinder head gasket damaged
- Cylinder head warped
- Valve spring broken or weak
- Valve not seating properly (valve bent, worn, or carbon accumulation on the seating surface)
- Hydraulic lash adjuster damaged (worn, seizure, or spring broken)
- Hydraulic lash adjuster oil passage clogged

Poor Running or at Low Speed:

Spark weak:
- Battery voltage low
- Spark plug dirty, broken, or maladjusted
- Spark plug cap or high tension wiring trouble
- Spark Plug cap shorted or not in good contact
- Spark plug incorrect
- IC igniter trouble
- Pickup coil trouble
- Ignition coil trouble

Fuel/air mixture incorrect:
- Pilot screw maladjusted
- Pilot jet, or air passage clogged
- Needle jet (air bleed pipe), bleed holes clogged
- Pilot passage clogged
- Air cleaner clogged, poorly sealed, or missing
- Starter plunger stuck open
- Fuel level in carburetor float bowl too high or too low
- Fuel tank air vent obstructed
- Carburetor holder loose
- Air cleaner or surge tank duct loose
- Fuel pump trouble

Backfiring when deceleration:
- Vacuum switch valve broken
- Air suction valve trouble

Other:
- IC igniter trouble
- Carburetors not synchronizing
- Carburetor vacuum piston doesn't slide smoothly
- Engine oil viscosity too high
- Drive train trouble
- Final gear case oil viscosity too high
- Brake dragging
- Air suction valve trouble
- Vacuum switch valve trouble

http://manuals.magnamania.com

Poor Running or No Power at High Speed:

Firing incorrect:
- Spark plug dirty, broken, or maladjusted
- Spark plug cap shorted or not in good contact
- Spark plug incorrect
- IC igniter trouble
- Pickup coil trouble
- Ignition coil trouble

Fuel/air mixture incorrect:
- Starter plunger stuck open
- Main jet clogged or wrong size
- Jet needle or needle jet worn
- Air jet clogged
- Fuel level in carburetor float bowl too high or too low
- Bleed holes of air bleed pipe or needle jet clogged
- Air cleaner clogged, poorly sealed, or missing
- Air cleaner or surge tank duct poorly sealed
- Water of foreign matter in fuel
- Fuel tap clogged
- Fuel line clogged
- Fuel pump trouble

Knocking:
- Carbon built up in combustion chamber
- Fuel poor quality or incorrect
- Spark plug incorrect
- IC igniter trouble

Backfiring when deceleration:
- Vacuum switch valve broken
- Air suction valve trouble

Miscellaneous:
- Throttle valve won't fully open
- Carburetor vacuum piston don't slide smoothly
- Brake dragging
- Clutch slipping
- Overheating
- Engine oil level too high
- Engine oil viscosity too high
- Drive train trouble
- Final gear case oil viscosity too high
- Air suction valve trouble
- Vacuum switch valve trouble
- Balancer mechanism malfunctioning

Overheating:

Firing incorrect:
- Spark plug, broken, or maladjusted
- Spark plug incorrect
- IC igniter trouble

Fuel/air mixture incorrect:
- Main jet clogged or wrong size
- Fuel level in carburetor float bowl too low
- Carburetor holder loose
- Air cleaner poorly sealed, or missing
- Air cleaner or surge tank duct poorly sealed
- Air cleaner duct loose

Engine load faulty:
- Clutch slipping
- Engine oil level too high
- Engine oil viscosity too high
- Drive train trouble
- Final gear case oil viscosity too high
- Brake dragging

Lubrication inadequate:
- Engine oil level too low
- Engine oil poor quality or incorrect

Gauge incorrect:
- Water temperature gauge broken
- Water temperature sensor broken

Coolant incorrect:
- Coolant level too low
- Coolant deteriorated

Cooling system component incorrect:
- Radiator clogged
- Thermostat trouble
- Radiator cap trouble
- Thermostatic fan switch trouble
- Fan relay trouble
- Fan motor broken
- Fan blade damaged
- Water pump not turning
- Water pump impeller damaged

Over Cooling:

Gauge incorrect:
- Water temperature gauge broken
- Water temperature sensor broken

Cooling system component incorrect:
- Thermostatic fan switch trouble
- Thermostat trouble

Clutch Operation Faulty:

Clutch slipping:
- Friction plate worn or warped
- Steel plate worn or warped
- Clutch spring broken or weak
- Clutch slave cylinder trouble
- Clutch hub or housing unevenly worn

Clutch not disengaging properly:
- Clutch plate warped or too rough
- Engine oil deteriorated
- Engine oil viscosity too high
- Engine oil level too high
- Clutch housing frozen on drive shaft
- Clutch slave cylinder trouble
- Clutch hub locknut loose
- Air in the clutch fluid line

http://manuals.magnamania.com

Clutch fluid leak
Clutch fluid deteriorated
Primary or secondary cup damaged
Master cylinder scratched inside

Gear Shifting Faulty:

Doesn't go into gear; shift pedal doesn't return:
Clutch not disengaging
Shift fork bent or seized
Gear stuck on the shaft
Gear positioning lever binding
Shift return spring weak or broken
Shift return spring bolt loose
Shift mechanism arm spring broken
Shift mechanism arm broken
Shift pawl broken

Jumps out of gear:
Shift fork worn
Gear groove worn
Gear dogs and/or dog holes worn
Shift drum groove worn
Gear positioning lever spring weak or broken
Shift fork pin worn
Drive shaft, output shaft, and/or gear splines worn

Overshifts:
Gear positioning lever spring weak or broken
Shift mechanism arm spring broken

Abnormal Engine Noise:

Knocking:
IC igniter trouble
Carbon built up in combustion chamber
Fuel poor quality or incorrect
Spark plug incorrect
Overheating

Piston slap:
Cylinder/piston clearance excessive
Cylinder, piston worn
Connecting rod bent
Piston pin, piston holes worn

Valve noise:
Engine not sufficiently warmed up after lash adjuster installation
Hydraulic lash adjuster damaged (worn, seizure, or spring broken)
Air in hydraulic lash adjuster
Metal chips or dust jammed in hydraulic lash adjuster
Engine operated in red zone
Valve spring broken or weak
Camshaft bearing worn

Other noise:
Connecting rod small end clearance excessive
Connecting rod big end clearance excessive
Piston ring worn, broken or stuck
Piston seizure, damage
Cylinder head gasket leaking
Exhaust pipe leaking at cylinder head connection
Crankshaft runout excessive
Engine mounts loose
Crankshaft bearing worn
Primary gear worn or chipped
Camshaft chain tensioner trouble
Camshaft chain, sprocket, guide worn
Air suction valve damaged
Vacuum switch valve damaged
Balancer gear worn or chipped
Balancer shaft position maladjusted
Balancer bearing worn
Water pump chain, sprocket worn

Abnormal Drive Train Noise:

Clutch noise:
Weak or damaged rubber damper
Clutch housing/friction plate clearance excessive
Clutch housing gear worn

Transmission noise:
Bearings worn
Transmission gears worn or chipped
Metal chips jammed in gear teeth
Engine oil insufficient

Drive line noise:
Bevel gear bearings worn
Bevel gears worn or chipped
Bevel gears maladjusted
Rear wheel coupling damaged
Insufficient lubricant

Abnormal Frame Noise:

Front fork noise:
Oil insufficient or too thin
Spring weak or broken

Rear shock absorber noise:
Shock absorber damaged

Disc brake noise:
Pad installed incorrectly
Pad surface glazed
Disc warped
Caliper trouble

Other noise:
Bracket, nut, bolt, etc. not properly mounted or tightened

Oil Pressure Warning Light Goes On:

Engine oil pump damaged
Engine oil screen clogged
Engine oil filter clogged
Engine oil level too low
Engine oil viscosity too low
Camshaft bearings worn
Crankshaft bearings worn
Oil pressure switch damaged
Wiring damaged
Relief valve stuck open
O-ring at the oil pipe in the crankcase damaged

Exhaust Smokes Excessively:

White smoke:
Piston oil ring worn
Cylinder worn
Valve oil seal damaged
Valve guide worn
Engine oil level too high

http://manuals.magnamaniac.com

Black smoke:
Air cleaner clogged
Main jet too large or fallen off
Starter plunger stuck open
Fuel level in carburetor float bowl too high

Brown smoke:
Main jet too small
Fuel level in carburetor float bowl too low
Air cleaner or surge tank duct loose
Air cleaner poorly sealed or missing

Ignition switch trouble
Alternator trouble
Wiring faulty

Battery Overcharged:

Alternator trouble
Regulator rectifier trouble

Handling and/or Stability Unsatisfactory:

Handlebar hard to turn:
Steering stem locknut too tight
Bearing damaged
Steering bearing lubrication inadequate
Steering stem bent
Tire air pressure too low

Handlebar shakes or excessively vibrates:
Tire worn
Swing arm pivot bearing worn
Rim warped, or not balanced
Wheel bearing worn
Handlebar clamp loose
Steering stem head nut loose

Handlebar pulls to one side:
Frame bent
Wheel misalignment
Swing arm bent or twisted
Steering maladjusted
Front fork bent
Right/left fork legs unbalanced (oil level)

Shock absorption unsatisfactory:
(Too hard)
Front fork oil excessive
Front fork oil viscosity too high
Tire air pressure too high
Front fork bent
(Too soft)
Front fork oil insufficient and/or leaking
Front fork oil viscosity too low
Front fork, rear shock absorber spring weak
Rear shock absorber oil leaking

Brake Doesn't Hold:

Air in the brake line
Pad or disc worn
Brake fluid leak
Disc warped
Contaminated pad
Brake fluid deteriorated
Primary or secondary cup damaged
Master cylinder scratched inside

Battery Discharged:

Battery faulty (e.g., plates sulphated, shorted through sedimentation, electrolyte level too low)
Battery leads making poor contact
Load excessive (e.g., bulb of excessive wattage)

http://manuals.magnamaniac.com

General Lubrication

Lubrication

- Before lubricating each part, clean off any rusty spots with rust remover and wipe off any grease, oil, dirt, or grime.
- Lubricate the points listed below with indicated lubricant.

NOTE

○*Whenever the vehicle has been operated wet or rainy conditions, or especially after using a high-pressure spray water, perform the general lubrication.*

Pivots: Lubricate with Motor Oil.
Side Stand
Clutch Lever
Brake Lever
Brake Pedal
Rear Brake Rod Joint

Points: Lubricate with Grease.
Throttle Inner Cables Lower End
Speedometer Inner Cable*
*Grease the lower part of the inner cable sparingly.

Cables: Lubricate with Motor Oil.
Choke Cable
Throttle Cables

Cable Lubrication

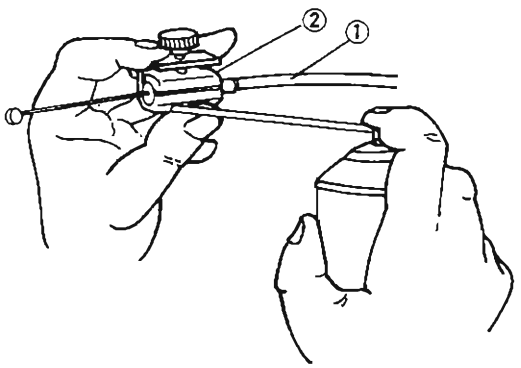

1. Cable
2. Pressure Cable Luber: K56019-021

Nut, Bolt, and Fastener Tightness

http://manuals.magnamaniac.com

Tightness Inspection

- Check the tightness of the bolts and nuts listed here. Also, check to see that each cotter pin is in place and in good condition.

NOTE

○*For the engine fasteners, check the tightness of them when the engine is cold (at room temperature).*

★If there are loose fasteners, retorque them to the specified torque following the specified tightening sequence. Refer to the appropriate chapter for torque specifications. If torque specifications are not in the appropriate chapter, see the basic torque table (see Torque and Locking Agent in the General Information chapter).
For each fastener, first loosen it by ¼ turn, then tighten it.
★If cotter pins are damaged, replace them with new ones.

Nut, Bolt, and Fastener to be checked
Wheels:
Front Axle Nut
Front Axle Clamp Bolts
Rear Axle Nut
Rear Axle Nut Cotter Pin
Brakes:
Front Master Cylinder Clamp Bolts
Front Caliper Mounting Bolts
Rear Master Cylinder Mounting Bolts
Rear Caliper Holder Mounting Bolts
Rear Caliper Mounting Bolts
Brake Lever Pivot Nut
Brake Pedal Bolt
Brake Rod Joint Cotter Pin
Suspension:
Front Fork Clamp Bolts
Front Fender Mounting Bolts
Rear Shock Absorber Mounting Bolt and Nuts
Swing Arm Pivot Shaft Nuts
Steering:
Stem Head Nut
Handlebar Clamp Bolts
Handle Grip Bar Bolts
Engine:
Engine Mounting Bolts
Rocker Case Nuts
Cylinder Head Nuts
Exhaust Pipe Mounting Nuts
Muffler Mounting Bolts
Exhaust Pipe and Muffler Connecting Clamp Bolts
Clutch Master Cylinder Clamp Bolts
Clutch Lever Pivot Nut
Radiator Mounting Bolts
Shift Pedal Bolt
Others:
Side Stand Nut
Rear Frame Mounting Bolts
Right Down Tube Mounting Bolts
Back Frame Mounting Bolts
Footpeg Bracket Mounting Bolts
Final Gear Case Mounting Nuts

Unit Conversion Table

Prefixes for Units:

Prefix	Symbol	Power
mega	M	x 1,000,000
kilo	k	x 1,000
centi	c	x 0.01
milli	m	x 0.001
micro	μ	x 0.000001

Units of Mass:

kg	x	2.205	=	lb
g	x	0.03527	=	oz

Units of Volume:

L	x	0.2642	=	gal (US)
L	x	0.2200	=	gal (imp)
L	x	1.057	=	qt (US)
L	x	0.8799	=	qt (imp)
L	x	2.113	=	pint (US)
L	x	1.816	=	pint (imp)
mL	x	0.03381	=	oz (US)
mL	x	0.02816	=	oz (imp)
mL	x	0.06102	=	cu in

Units of Force:

N	x	0.1020	=	kg
N	x	0.2248	=	lb
kg	x	9.807	=	N
kg	x	2.205	=	lb

Units of Length:

km	x	0.6214	=	mile
m	x	3.281	=	ft
mm	x	0.03937	=	in

Units of Torque:

N-m	x	0.1020	=	kg-m
N-m	x	0.7376	=	ft-lb
N-m	x	8.851	=	in-lb
kg-m	x	9.807	=	N-m
kg-m	x	7.233	=	ft-lb
kg-m	x	86.80	=	in-lb

Units of Pressure:

kPa	x	0.01020	=	kg/cm^2
kPa	x	0.1450	=	psi
kPa	x	0.7501	=	cm Hg
kg/cm^2	x	98.07	=	kPa
kg/cm^2	x	14.22	=	psi
cm Hg	x	1.333	=	kPa

Units of Speed:

km/h	x	0.6214	=	mph

Units of Power:

kW	x	1.360	=	PS
kW	x	1.341	=	HP
PS	x	0.7355	=	kW
PS	x	0.9863	=	HP

Units of Temperature:

$$\frac{9\,(°C + 40)}{5} - 40 = °F \qquad \frac{5\,(°F + 40)}{9} - 40 = °C$$

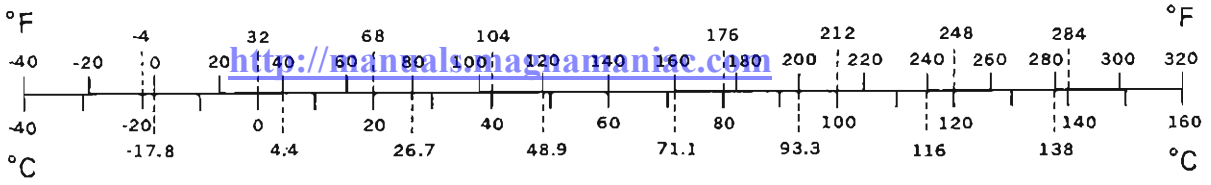

http://manuals.magnamanic.com

MODEL APPLICATION

Year	Model	Beginning Frame No.
1987	VN1500-A1	JKBVNAA1□HA000021
	VN1500-B1	JKBVNAB1□HA000011,or JKBVNAB1□HB500001
1988	VN1500-A2	JKBVNAA1□JA001001,or VTN50A-001001
	VN1500-B2	JKBVNAB1□JA000301,or JKBVNAB1□JB500601,or VTN50A-003001
1989	VN1500-A3	JKBVNAA1□KA003001,or VTN50A-003001
	VN1500-B3	JKBVNAB1□KA002001,or VTN50B-002001
1990	VN1500-A3	JKBVNAA1□LA003001,or VTN50A-004001
	VN1500-B3	JKBVNAB1□LB501401,or VTN50B-003001
1991	VN1500-A5	JKBVNAA1□MA006001,or VTN50A-006001
	VN1500-B5	VTN50B-005001
1992	VN1500-A5	JKBVNAA1□NA009001,or VTN50A-009001
	VN1500-B6	VTN50B-009001
1993	VN1500-A7	JKBVNAA1□PA013001
1994	VN1500-A8	JKBVNAA1□RA020001
1995	VN1500-A9	JKBVNAA1□SA026001
1996	VN1500-A10	JKBVNAA1□TA040001
1997	VN1500-A11	JKBVNAA1□VA060001
1998	VN1500-A12	JKBVNAA1□WA075001
1999	VN1500-A13	JKBVNAA1□XA085001

http://manuals.magnamania.com

Kawasaki
KAWASAKI HEAVY INDUSTRIES, LTD.
Consumer Productu & Machinery Group

Part No. 99924-1078-08

Printed in Japan